AUTHENTICATED
U.S. GOVERNMENT
INFORMATION
GPO

FEDERAL REGISTER

Vol. 85 Thursday,
No. 176 September 10, 2020

Pages 55781–56158

OFFICE OF THE FEDERAL REGISTER

The **FEDERAL REGISTER** (ISSN 0097–6326) is published daily, Monday through Friday, except official holidays, by the Office of the Federal Register, National Archives and Records Administration, under the Federal Register Act (44 U.S.C. Ch. 15) and the regulations of the Administrative Committee of the Federal Register (1 CFR Ch. I). The Superintendent of Documents, U.S. Government Publishing Office, is the exclusive distributor of the official edition. Periodicals postage is paid at Washington, DC.

The **FEDERAL REGISTER** provides a uniform system for making available to the public regulations and legal notices issued by Federal agencies. These include Presidential proclamations and Executive Orders, Federal agency documents having general applicability and legal effect, documents required to be published by act of Congress, and other Federal agency documents of public interest.

Documents are on file for public inspection in the Office of the Federal Register the day before they are published, unless the issuing agency requests earlier filing. For a list of documents currently on file for public inspection, see *www.federalregister.gov.*

The seal of the National Archives and Records Administration authenticates the Federal Register as the official serial publication established under the Federal Register Act. Under 44 U.S.C. 1507, the contents of the **Federal Register** shall be judicially noticed.

The **Federal Register** is published in paper and on 24x microfiche. It is also available online at no charge at *www.govinfo.gov*, a service of the U.S. Government Publishing Office.

The online edition of the **Federal Register** is issued under the authority of the Administrative Committee of the Federal Register as the official legal equivalent of the paper and microfiche editions (44 U.S.C. 4101 and 1 CFR 5.10). It is updated by 6:00 a.m. each day the **Federal Register** is published and includes both text and graphics from Volume 1, 1 (March 14, 1936) forward. For more information, contact the GPO Customer Contact Center, U.S. Government Publishing Office. Phone 202-512-1800 or 866-512-1800 (toll free). E-mail, *gpocusthelp.com.*

The annual subscription price for the **Federal Register** paper edition is $860 plus postage, or $929, for a combined **Federal Register, Federal Register** Index and List of CFR Sections Affected (LSA) subscription; the microfiche edition of the **Federal Register** including the **Federal Register** Index and LSA is $330, plus postage. Six month subscriptions are available for one-half the annual rate. The prevailing postal rates will be applied to orders according to the delivery method requested. The price of a single copy of the daily **Federal Register,** including postage, is based on the number of pages: $11 for an issue containing less than 200 pages; $22 for an issue containing 200 to 400 pages; and $33 for an issue containing more than 400 pages. Single issues of the microfiche edition may be purchased for $3 per copy, including postage. Remit check or money order, made payable to the Superintendent of Documents, or charge to your GPO Deposit Account, VISA, MasterCard, American Express, or Discover. Mail to: U.S. Government Publishing Office—New Orders, P.O. Box 979050, St. Louis, MO 63197-9000; or call toll free 1-866-512-1800, DC area 202-512-1800; or go to the U.S. Government Online Bookstore site, see *bookstore.gpo.gov.*

There are no restrictions on the republication of material appearing in the **Federal Register.**

How To Cite This Publication: Use the volume number and the page number. Example: 85 FR 12345.

Postmaster: Send address changes to the Superintendent of Documents, Federal Register, U.S. Government Publishing Office, Washington, DC 20402, along with the entire mailing label from the last issue received.

SUBSCRIPTIONS AND COPIES

PUBLIC

Subscriptions:

Paper or fiche	**202–512–1800**
Assistance with public subscriptions	**202–512–1806**
General online information	**202–512–1530; 1–888–293–6498**

Single copies/back copies:

Paper or fiche	**202–512–1800**
Assistance with public single copies	**1–866–512–1800 (Toll-Free)**

FEDERAL AGENCIES

Subscriptions:

Assistance with Federal agency subscriptions:

Email	*FRSubscriptions@nara.gov*
Phone	**202–741–6000**

The Federal Register Printing Savings Act of 2017 (Pub. L. 115-120) placed restrictions on distribution of official printed copies of the daily **Federal Register** to members of Congress and Federal offices. Under this Act, the Director of the Government Publishing Office may not provide printed copies of the daily **Federal Register** unless a Member or other Federal office requests a specific issue or a subscription to the print edition. For more information on how to subscribe use the following website link: *https://www.gpo.gov/frsubs.*

Printed on recycled paper.

Contents

Federal Register

Vol. 85, No. 176

Thursday, September 10, 2020

Agriculture Department
See Animal and Plant Health Inspection Service
See Forest Service
NOTICES
Fiscal Year 2020 Raw Cane Sugar Tariff-Rate Quota Increase and Extension of Entry Period, 55812
Innovative Technologies and Practices for the Agriculture Innovation Agenda, 55812–55813

Animal and Plant Health Inspection Service
NOTICES
Environmental Impact Statements; Availability, etc.:
Wildlife Damage Management in California, 55814–55815

Bureau of Consumer Financial Protection
NOTICES
Supervisory Highlights, Issue 22; Summer 2020, 55828–55840

Census Bureau
NOTICES
Agency Information Collection Activities; Proposals, Submissions, and Approvals:
Annual Business Survey; Supplemental Questions, 55822–55823
Annual Capital Expenditures Survey, 55821–55822
Annual Survey of Manufactures, 55818–55820
Annual Wholesale Trade Survey, 55820–55821

Children and Families Administration
NOTICES
Agency Information Collection Activities; Proposals, Submissions, and Approvals:
Child Care and Development Fund Plan for States/Territories for FFY 2022-2024, 55852

Civil Rights Commission
NOTICES
Meetings:
Colorado Advisory Committee, 55817
Illinois Advisory Committee, 55816–55817
Massachusetts Advisory Committee, 55817–55818
Ohio Advisory Committee; Correction, 55816

Commerce Department
See Census Bureau
See Economic Development Administration
See International Trade Administration
See National Institute of Standards and Technology
See National Oceanic and Atmospheric Administration

Defense Acquisition Regulations System
NOTICES
Agency Information Collection Activities; Proposals, Submissions, and Approvals:
Evaluation Factor for Use of Members of the Armed Forces Selected Reserve, 55840–55841
Small Business Programs, 55840

Defense Department
See Defense Acquisition Regulations System
See Engineers Corps
RULES
Service Academies, 55783–55784
User Fees, 55783

Economic Development Administration
NOTICES
Petitions by Firms for Determination of Eligibility to Apply for Trade Adjustment Assistance, 55823–55824

Education Department
PROPOSED RULES
American Indian Vocational Rehabilitation Services: Training and Technical Assistance, 55802–55810
NOTICES
Agency Information Collection Activities; Proposals, Submissions, and Approvals:
National Assessment of Educational Progress 2021 Materials Update, 55844
Report of Dispute Resolution under Part C of the Individuals with Disabilities Education Act, 55844–55845

Energy Department
See Federal Energy Regulatory Commission

Engineers Corps
NOTICES
Environmental Impact Statements; Availability, etc.:
Easement to Cross under Lake Oahe, North Dakota for a Fuel-Carrying Pipeline Right-Of-Way for a Portion of the Dakota Access Pipeline., 55843–55844
Nassau County Back Bays Coastal Storm Risk Management Feasibility Study, 55841–55842
Upper Susquehanna River Basin, New York; Comprehensive Flood Damage Reduction Feasibility Study; Withdrawal, 55842–55843

Environmental Protection Agency
RULES
National Emission Standards for Hazardous Air Pollutants:
Iron and Steel Foundries Major Source Residual Risk and Technology Review and Area Source Technology Review, 56080–56106
PROPOSED RULES
Petition Filed for Residues of Pesticide Chemicals in or on Various Commodities (July 2020), 55810–55811

Farm Credit Administration
PROPOSED RULES
Regulatory Capital Rules:
Tier 1/Tier 2 Framework, 55786–55801
NOTICES
Privacy Act; System of Records, 55848–55850

Federal Aviation Administration
RULES
Airworthiness Directives:
Leonardo S.p.a. Helicopters, 55781–55783
NOTICES
Environmental Assessments; Availability, etc.:
Long Range Discrimination Radar Performance Testing, Clear Air Force Station, Alaska; Temporary Flight Restrictions, 55926–55927

Federal Energy Regulatory Commission
NOTICES
Environmental Assessments; Availability, etc.:
Trans-Foreland Pipeline Co., LLC, 55846–55847
Petition for Declaratory Order:
Tucson Electric Power Co., 55848
Request under Blanket Authorization:
Columbia Gas Transmission, LLC, 55846
WBI Energy Transmission, Inc., 55845–55846
Schedule for Environmental Review:
WBI Energy Transmission, Inc.; North Bakken Expansion Project, 55848

Federal Motor Carrier Safety Administration
NOTICES
Proposed Pilot Program to Allow Persons Ages 18, 19, and 20 to Operate Commercial Motor Vehicles in Interstate Commerce, 55928–55934
Qualification of Drivers; Exemption Applications:
Implantable Cardioverter Defibrillator, 55927–55928

Federal Trade Commission
NOTICES
Meetings:
Public Workshop Examining Franchise Rule, 55850–55852

Fish and Wildlife Service
NOTICES
Categorical Exclusion and Draft City of Santa Cruz Operations and Maintenance Habitat Conservation Plan:
Santa Cruz County, CA, 55856–55857
Environmental Assessments; Availability, etc.:
Habitat Conservation Plan for the Endangered American Burying Beetle; City of Oklahoma City's Second Atoka Pipeline Project, in Six Oklahoma Counties, 55855–55856

Food and Drug Administration
PROPOSED RULES
Annual Summary Reporting Requirements under the Right to Try Act:
Correction, 55802

Foreign Assets Control Office
NOTICES
Blocking or Unblocking of Persons and Properties, 55934–55935

Forest Service
NOTICES
Environmental Impact Statements; Availability, etc.:
Fishlake National Forest; Utah; Southern Monroe Mountain Allotments Livestock Grazing Authorization, 55815–55816

Health and Human Services Department
See Children and Families Administration
See Food and Drug Administration
See National Institutes of Health
PROPOSED RULES
Mandatory Guidelines for Federal Workplace Drug Testing Programs, 56108–56151
NOTICES
Meetings:
Advisory Committee on Blood and Tissue Safety and Availability, 55853–55854
Request for Information:
Testing for Coronavirus Disease 2019 (COVID–19)—Surge Capacity, 55853

Interior Department
See Fish and Wildlife Service
See Land Management Bureau
See Ocean Energy Management Bureau

Internal Revenue Service
NOTICES
Agency Information Collection Activities; Proposals, Submissions, and Approvals, 55936–55937
Agency Information Collection Activities; Proposals, Submissions, and Approvals:
Gift (and Generation-Skipping Transfer) Tax Return, 55937
Meetings:
Taxpayer Advocacy Panel Joint Committee, 55937–55938
Taxpayer Advocacy Panel Taxpayer Assistance Center Improvements Project Committee, 55936
Taxpayer Advocacy Panel Taxpayer Communications Project Committee, 55936
Taxpayer Advocacy Panel's Notices and Correspondence Project Committee, 55935
Taxpayer Advocacy Panel's Special Projects Committee, 55938
Taxpayer Advocacy Panel's Tax Forms and Publications Project Committee, 55937
Taxpayer Advocacy Panel's Toll–Free Phone Lines Project Committee, 55935

International Trade Administration
PROPOSED RULES
Regulations to Improve Administration and Enforcement of Antidumping and Countervailing Duty Laws; Extension of Comment Period to Allow Submissions of Rebuttal Comments and Requirement of Electronic Submission of Comments and Rebuttal Comments, 55801
NOTICES
Antidumping or Countervailing Duty Investigations, Orders, or Reviews:
Polyethylene Terephthalate Sheet from the Republic of Korea and the Sultanate of Oman, 55824–55825
Determination of Sales At Less Than Fair Value:
Certain Corrosion Inhibitors from the People's Republic of China, 55825–55828

International Trade Commission
NOTICES
Investigations; Determinations, Modifications, and Rulings, etc.:
Polyethylene Terephthalate Sheet from Korea and Oman, 55862

Land Management Bureau
PROPOSED RULES
Oil and Gas Site Security, Oil Measurement, and Gas Measurement Regulations, 55940–56077
NOTICES
Realty Action:
Recreation and Public Purposes Act Classification and Segregation for Intake Campground, Dawson County, MT, 55858–55859

National Archives and Records Administration
NOTICES
Meetings:
National Industrial Security Program Policy Advisory Committee, 55862–55863

National Institute of Standards and Technology
NOTICES
Meetings:
Visiting Committee on Advanced Technology, 55828

National Institutes of Health
NOTICES
Meetings:
National Institute of Biomedical Imaging and Bioengineering, 55855
National Institute on Aging, 55854–55855

National Oceanic and Atmospheric Administration
RULES
Fisheries off West Coast States:
Modifications of the West Coast Commercial Salmon Fisheries; Inseason Action No. 7, 55784–55785

National Transportation Safety Board
NOTICES
Meetings; Sunshine Act, 55863

Nuclear Regulatory Commission
NOTICES
Environmental Assessments; Availability, etc.:
Exelon Generation Co., LLC, Braidwood Station, Units 1 and 2, 55863–55869

Ocean Energy Management Bureau
NOTICES
Oil and Gas Lease Sale:
Outer Continental Shelf, Alaska Region, Cook Inlet Planning Area; 258, 55861–55862
Outer Continental Shelf, Alaska Region, Cook Inlet; 258, 55859–55861

Postal Regulatory Commission
NOTICES
New Postal Products, 55869

Presidential Documents
ADMINISTRATIVE ORDERS
Cybersecurity; Space Systems Principles (Space Policy Directive–5 of September 4, 2020), 56153–56158

Securities and Exchange Commission
NOTICES
Application:
1WS Credit Income Fund, et al., 55919–55923
Self-Regulatory Organizations; Proposed Rule Changes:
Cboe Exchange, Inc., 55869–55872, 55905
LCH SA, 55908–55915
Long-Term Stock Exchange, Inc., 55872–55873
MEMX, LLC, 55915–55919
Miami International Securities Exchange, LLC, 55873–55876, 55905–55908
Nasdaq BX, Inc., 55877–55886
New York Stock Exchange, LLC, 55902–55904
The Nasdaq Stock Market, LLC, 55887–55902

Surface Transportation Board
NOTICES
Abandonment Exemption:
Union Pacific Railroad Co., Harris County, TX, 55924
Meetings:
Rail Energy Transportation Advisory Committee, 55923–55924

Trade Representative, Office of United States
NOTICES
National Trade Estimate Report on Foreign Trade Barriers, 55925–55926

Transportation Department
See Federal Aviation Administration
See Federal Motor Carrier Safety Administration

Treasury Department
See Foreign Assets Control Office
See Internal Revenue Service

Separate Parts In This Issue

Part II
Interior Department, Land Management Bureau, 55940–56077

Part III
Environmental Protection Agency, 56080–56106

Part IV
Health and Human Services Department, 56108–56151

Part V
Presidential Documents, 56153–56158

Reader Aids

Consult the Reader Aids section at the end of this issue for phone numbers, online resources, finding aids, and notice of recently enacted public laws.

To subscribe to the Federal Register Table of Contents electronic mailing list, go to https://public.govdelivery.com/accounts/USGPOOFR/subscriber/new, enter your e-mail address, then follow the instructions to join, leave, or manage your subscription.

CFR PARTS AFFECTED IN THIS ISSUE

A cumulative list of the parts affected this month can be found in the Reader Aids section at the end of this issue.

3 CFR
Administrative Orders:
Space Policy
Directive—5.....56155

12 CFR
Proposed Rules:
614.....55786
615.....55786
620.....55786
628.....55786

14 CFR
39.....55781

19 CFR
Proposed Rules:
351.....55801

21 CFR
Proposed Rules:
300.....55802

32 CFR
204.....55783
217.....55783

34 CFR
Proposed Rules:
Ch. III.....55802

40 CFR
63.....56080
Proposed Rules:
180.....55810

42 CFR
Proposed Rules:
Ch. I.....56108

43 CFR
Proposed Rules:
3170.....55940

50 CFR
660.....55784

Rules and Regulations

Federal Register

Vol. 85, No. 176

Thursday, September 10, 2020

This section of the FEDERAL REGISTER contains regulatory documents having general applicability and legal effect, most of which are keyed to and codified in the Code of Federal Regulations, which is published under 50 titles pursuant to 44 U.S.C. 1510.

The Code of Federal Regulations is sold by the Superintendent of Documents.

DEPARTMENT OF TRANSPORTATION

Federal Aviation Administration

14 CFR Part 39

[Docket No. FAA–2020–0554; Product Identifier 2016–SW–088–AD; Amendment 39–21245; AD 2020–19–04]

RIN 2120–AA64

Airworthiness Directives; Leonardo S.p.a. Helicopters

AGENCY: Federal Aviation Administration (FAA), DOT.

ACTION: Final rule.

SUMMARY: The FAA is adopting a new airworthiness directive (AD) for Leonardo S.p.a. (Leonardo) Model AB139 and AW139 helicopters. This AD requires removing certain main gearbox (MGB) input modules from service. This AD was prompted by the discovery that a batch of duplex bearings, which are installed on the MGB input modules, are defective. The actions of this AD are intended to address an unsafe condition on these products.

DATES: This AD is effective October 15, 2020.

ADDRESSES: For service information identified in this final rule, contact Leonardo S.p.a. Helicopters, Emanuele Bufano, Head of Airworthiness, Viale G.Agusta 520, 21017 C.Costa di Samarate (Va) Italy; telephone +39–0331–225074; fax +39–0331–229046; or at *https://www.leonardocompany.com/en/home.* You may view this service information at the FAA, 10101 Hillwood Pkwy., Fort Worth, TX 76177. For information on the availability of this material at the FAA, call 817–222–5110.

Examining the AD Docket

You may examine the AD docket on the internet at *https://www.regulations.gov* by searching for and locating Docket No FAA–2020–0554; or in person at Docket Operations between 9 a.m. and 5 p.m., Monday through Friday, except Federal holidays. The AD docket contains this AD, the European Aviation Safety Agency (now European Union Aviation Safety Agency) (EASA) AD, and other information. The address for Docket Operations is U.S. Department of Transportation, Docket Operations, M–30, West Building Ground Floor, Room W12–140, 1200 New Jersey Avenue SE, Washington, DC 20590.

FOR FURTHER INFORMATION CONTACT: Rao Edupuganti, Aviation Safety Engineer, Regulations and Policy Section, Rotorcraft Standards Branch, FAA, 10101 Hillwood Pkwy., Fort Worth, TX 76177; telephone 817–222–5110; email *rao.edupuganti@faa.gov.*

SUPPLEMENTARY INFORMATION:

Discussion

The FAA issued a notice of proposed rulemaking (NPRM) to amend 14 CFR part 39 by adding an AD that would apply to Leonardo Model AB139 and AW139 helicopters with certain serial-numbered MGB input modules part number (P/N) 3K6320A00135 or P/N 3K6320A00136 installed. The NPRM published in the **Federal Register** on June 8, 2020 (85 FR 35018). The NPRM proposed to require removing the affected MGB input modules from service and prohibit installing the affected MGB input modules. The proposed requirements were intended to address defective duplex bearings on MGB input modules, which could result in damage including corrosion and cracking, which could result in excessive heat of the input module duplex ball bearing inner race and subsequent loss of engine power and loss of helicopter control.

The NPRM was prompted by EASA AD No. 2016–0255R1, dated January 17, 2017 (EASA AD 2016–0255R1), issued by EASA, which is the Technical Agent for the Member States of the European Union, to correct an unsafe condition for Leonardo (formerly Finmeccanica S.p.A., AgustaWestland Philadelphia Corporation, Agusta Aerospace Corporation) Model AB139 and AW139 helicopters with certain serial-numbered MGB input modules P/N 3K6320A00135 or P/N 3K6320A00136 installed. EASA advises that the supplier of a batch of duplex bearings installed on MGB input modules reported that the bearings were defective, due to a quality control issue. This condition, if not detected or corrected, could lead to damage of the input module duplex ball bearing inner race, possibly resulting in loss of engine power and reduced control of the helicopter. Accordingly, EASA AD 2016–0255R1 requires removing the affected MGB input modules from service.

Comments

The FAA gave the public the opportunity to participate in developing this final rule. The FAA received one comment in support of the NPRM.

FAA's Determination

These helicopters have been approved by EASA and are approved for operation in the United States. Pursuant to the FAA's bilateral agreement with the European Union, EASA has notified the FAA about the unsafe condition described in its AD. The FAA is issuing this AD after evaluating all known relevant information and determining that an unsafe condition is likely to exist or develop on other helicopters of the same type designs.

Differences Between This AD and the EASA AD

The EASA AD requires returning affected parts and sending information to Leonardo; however, this AD does not.

Related Service Information

The FAA reviewed Leonardo Helicopters Bollettino Tecnico No. 139–303, dated September 20, 2016, which specifies replacing certain duplex bearings on MGB left-hand and right-hand input modules on Model AB139 and AW139 helicopters.

Costs of Compliance

The FAA estimates that this AD affects 71 helicopters of U.S. Registry. The FAA estimates that operators may incur the following costs in order to comply with this AD. Labor costs are estimated at $85 per work-hour.

Replacing one input module takes about 60 work-hours and parts cost about $84,847 for an estimated cost of $89,947 per input module. Replacing two input modules takes about 100 work-hours and parts cost about $169,694 for an estimated cost of $178,194 per two input modules.

Authority for This Rulemaking

Title 49 of the United States Code specifies the FAA's authority to issue rules on aviation safety. Subtitle I, section 106, describes the authority of the FAA Administrator. Subtitle VII: Aviation Programs, describes in more detail the scope of the Agency's authority.

The FAA is issuing this rulemaking under the authority described in Subtitle VII, Part A, Subpart III, Section 44701: General requirements. Under that section, Congress charges the FAA with promoting safe flight of civil aircraft in air commerce by prescribing regulations for practices, methods, and procedures the Administrator finds necessary for safety in air commerce. This regulation is within the scope of that authority because it addresses an unsafe condition that is likely to exist or develop on products identified in this rulemaking action.

Regulatory Findings

This AD will not have federalism implications under Executive Order 13132. This AD will not have a substantial direct effect on the States, on the relationship between the national government and the States, or on the distribution of power and responsibilities among the various levels of government.

For the reasons discussed above, I certify that this AD:

(1) Is not a ''significant regulatory action'' under Executive Order 12866,

(2) Will not affect intrastate aviation in Alaska, and

(3) Will not have a significant economic impact, positive or negative, on a substantial number of small entities under the criteria of the Regulatory Flexibility Act.

List of Subjects in 14 CFR Part 39

Air transportation, Aircraft, Aviation safety, Incorporation by reference, Safety.

Adoption of the Amendment

Accordingly, under the authority delegated to me by the Administrator, the FAA amends 14 CFR part 39 as follows:

PART 39—AIRWORTHINESS DIRECTIVES

■ 1. The authority citation for part 39 continues to read as follows:

Authority: 49 U.S.C. 106(g), 40113, 44701.

§ 39.13 [Amended]

■ 2. The FAA amends § 39.13 by adding the following new airworthiness directive (AD):

2020–19–04 Leonardo S.p.a.: Amendment 39–21245; Docket No. FAA–2020–0554; Product Identifier 2016–SW–088–AD.

(a) Applicability

This AD applies to Leonardo S.p.a. Model AB139 and AW139 helicopters, certified in any category, with main gearbox (MGB) input module part number (P/N) 3K6320A00135 with serial number (S/N) KHI–200 or P/N 3K6320A00136 with an S/N listed in Table 1 to this paragraph installed.

BILLING CODE 4910–13–P

Table 1 to Paragraph (a)

P/N 3K6320A00136 MGB Input Modules (S/N)					
KHI-395	KHI-E82	KHI-E87	KHI-E88	KHI-E89	KHI-E90
KHI-E91	KHI-E92	KHI-E94	KHI-E98	KHI-F01	KHI-F04
KHI-F07	KHI-F11	KHI-F13	KHI-F15	KHI-F16	KHI-F22
KHI-F23	KHI-F26	KHI-F27	KHI-F29	KHI-F31	KHI-F34
KHI-F35	KHI-F39	KHI-F40	KHI-F45	KHI-F46	KHI-F51
KHI-F53	KHI-F55	KHI-F58	KHI-F59	KHI-F60	KHI-F63
KHI-F74	KHI-F75	KHI-F87	KHI-F92	KHI-F93	KHI-F96
KHI-G09	KHI-G10	KHI-G15	KHI-G18	KHI-G19	KHI-G21
KHI-G25	KHI-G26	KHI-G31	KHI-G32	KHI-G35	KHI-G38
KHI-G39	KHI-G41	KHI-G44	KHI-G56	KHI-G58	KHI-G60
KHI-G62	KHI-G63	KHI-G65	KHI-G68	KHI-G70	KHI-G71
KHI-G72	KHI-G76	KHI-G77	KHI-G79	KHI-G81	

BILLING CODE 4910–13–C

(b) Unsafe Condition

This AD defines the unsafe condition as defective duplex bearings on MGB input modules, due to a quality control issue. This condition could result in damage including corrosion and cracking, which could result in excessive heat of the input module duplex ball bearing inner race and subsequent loss of engine power and loss of helicopter control.

(c) Effective Date

This AD becomes effective October 15, 2020.

(d) Compliance

You are responsible for performing each action required by this AD within the specified compliance time unless it has already been accomplished prior to that time.

(e) Required Actions

(1) If the P/N and S/N of both MGB input modules are listed in paragraph (a) of this AD, within 300 hours time-in-service (TIS), remove from service each MGB input module.

(2) If the P/N and S/N of only one MGB input module are listed in paragraph (a) of this AD, within 1,200 hours TIS, remove from service that MGB input module.

(3) After the effective date of this AD, do not install an MGB input module with a P/N and S/N listed in paragraph (a) of this AD on any helicopter.

(f) Alternative Methods of Compliance (AMOCs)

(1) The Manager, Rotorcraft Standards Branch, FAA, may approve AMOCs for this AD. Send your proposal to: Rao Edupuganti, Aviation Safety Engineer, Regulations and Policy Section, Rotorcraft Standards Branch, FAA, 10101 Hillwood Pkwy., Fort Worth, TX 76177; telephone 817–222–5110; email *9-ASW-FTW-AMOC-Requests@faa.gov.*

(2) For operations conducted under a 14 CFR part 119 operating certificate or under 14 CFR part 91, subpart K, the FAA suggests that you notify your principal inspector, or lacking a principal inspector, the manager of the local flight standards district office or certificate holding district office before operating any aircraft complying with this AD through an AMOC.

(g) Additional Information

(1) Leonardo Helicopters Bollettino Tecnico No. 139–303, dated September 20, 2016, which is not incorporated by reference, contains additional information about the subject of this AD. For service information identified in this AD, contact Leonardo S.p.a. Helicopters, Emanuele Bufano, Head of Airworthiness, Viale G.Agusta 520, 21017 C.Costa di Samarate (Va) Italy; telephone +39–0331–225074; fax +39–0331–229046; or at *https://www.leonardocompany.com/en/home.* You may view a copy of the service information at the FAA, Office of the Regional Counsel, Southwest Region, 10101 Hillwood Pkwy., Room 6N–321, Fort Worth, TX 76177.

(2) The subject of this AD is addressed in European Aviation Safety Agency (now European Union Aviation Safety Agency) (EASA) AD No. 2016–0255R1, dated January 17, 2017. You may view the EASA AD on the internet at *https://www.regulations.gov* in Docket No. FAA–2020–0554.

(h) Subject

Joint Aircraft Service Component (JASC) Code: 6320, Rotor Drive-Gearbox.

Issued on September 3, 2020.

Lance T. Gant,

Director, Compliance & Airworthiness Division, Aircraft Certification Service.

[FR Doc. 2020–19906 Filed 9–9–20; 8:45 am]

BILLING CODE 4910–13–P

DEPARTMENT OF DEFENSE

Office of the Secretary

32 CFR Part 204

[Docket ID: DOD–2018–OS–0044]

RIN 0790–AK45

User Fees

AGENCY: Office of the Under Secretary of Defense (Comptroller), Department of Defense (DoD).

ACTION: Final rule.

SUMMARY: This final rule removes DoD's regulation that provides instructions to DoD Components on establishing appropriate fees for authorized services supplied by DoD organizations when such services provide special benefits to an identifiable recipient beyond those that accrue to the general public. User fees paid by the public represent either the full cost to the DoD, or the market value of providing the service, resource, or good. The regulation is unnecessary because it restates current law; sets forth internal policy and procedures; and conveys to the public administrative and procedural information that does not require rulemaking. Therefore, this rule is unnecessary and can be removed from the CFR.

DATES: This rule is effective on September 10, 2020.

FOR FURTHER INFORMATION CONTACT: Kellie Allison at 703–614–0410.

SUPPLEMENTARY INFORMATION: It has been determined that publication of this CFR part removal for public comment is impracticable, unnecessary, and contrary to public interest since it is based on removing DoD guidance that is not required to be codified and is publicly available on the Department's website. DoD guidance will continue to be published in DoD 7000.14–R, Financial Management Regulation, Volume 11A, Chapter 4, ''User Fees'' available at *https://comptroller.defense.gov/Portals/45/documents/fmr/current/11a/11a_04.pdf.*

This rule is not significant under Executive Order (E.O.) 12866, ''Regulatory Planning and Review,'' therefore, E.O. 13771, ''Reducing Regulation and Controlling Regulatory Costs,'' does not apply.

This removal supports a recommendation of the DoD Regulatory Reform Task Force.

List of Subjects in 32 CFR Part 204

Accounting, Armed forces, Government property.

PART 204—[REMOVED]

■ Accordingly, by the authority of 5 U.S.C. 301, 32 CFR part 204 is removed.

Dated: September 4, 2020.

Aaron T. Siegel,

Alternate OSD Federal Register Liaison Officer, Department of Defense.

[FR Doc. 2020–20005 Filed 9–9–20; 8:45 am]

BILLING CODE 5001–06–P

DEPARTMENT OF DEFENSE

Office of the Secretary

32 CFR Part 217

[Docket ID: DOD–2020–OS–0059]

RIN 0790–AL02

Service Academies

AGENCY: Office of the Under Secretary of Defense for Personnel and Readiness, Department of Defense (DoD).

ACTION: Final rule.

SUMMARY: This regulatory action removes this part from the Code of Federal Regulations (CFR), as information contained within this rule is an overview of policy and statute that provides guidance and direction to members of the DoD and not members of the public. Therefore, this rule can be removed from the CFR.

DATES: This rule is effective on September 10, 2020.

FOR FURTHER INFORMATION CONTACT: Lt Col David Nuckles, (703) 695–5529.

SUPPLEMENTARY INFORMATION: This rule was added to the CFR on December 31, 2015 (80 FR 81760–81767). This rule is redundant in that it established policy, assigned responsibilities, and prescribed procedures for members of the DoD on operation and oversight of the Military Service Academies, and does not regulate the public. Internal Departmental policies are current and reflective of these and other requirements in statute, and public

notification is not required. Information in 32 CFR part 217 is redundant to information publically available in 10 U.S.C. chapters 33, 47, 61, 403, 603, 903; 10 U.S.C. 702 and 2005; 37 U.S.C. 303a; and DoD Instruction 1322.22, ''Service Academies.''

It has been determined that publication of this CFR part removal for public comment is impracticable, unnecessary, and contrary to public interest since it is based on removing DoD internal policies and procedures that are publicly available on a Departmental website. A copy of the current DoD Instruction 1322.22, most recently updated on September 24, 2015, may be obtained at the following web address: *https://www.esd.whs.mil/Portals/54/Documents/DD/issuances/dodi/132222p.pdf.*

This rule is not significant under Executive Order (E.O.) 12866, ''Regulatory Planning and Review.'' Therefore, the requirements of E.O. 13771, ''Reducing Regulation and Controlling Regulatory Costs,'' do not apply.

This removal supports a recommendation of the DoD Regulatory Reform Task Force.

List of Subjects in 32 CFR Part 217

Colleges and universities, Education.

PART 217—[REMOVED]

■ Accordingly, by the authority of 5 U.S.C. 301, 32 CFR part 217 is removed.

Dated: September 4, 2020.

Aaron T. Siegel,

Alternate OSD Federal Register Liaison Officer, Department of Defense.

[FR Doc. 2020–19992 Filed 9–9–20; 8:45 am]

BILLING CODE 5001–06–P

DEPARTMENT OF COMMERCE

National Oceanic and Atmospheric Administration

50 CFR Part 660

[Docket No. 200505–0127; RTID 0648–XA261]

Fisheries Off West Coast States; Modifications of the West Coast Commercial Salmon Fisheries; Inseason Action #7

AGENCY: National Marine Fisheries Service (NMFS), National Oceanic and Atmospheric Administration (NOAA), Commerce.

ACTION: Inseason modification of 2020 management measures.

SUMMARY: NMFS announces one inseason action in the 2020 ocean salmon fisheries. This inseason action modified regulations regarding the retention of Pacific halibut caught incidental to the commercial salmon fishery in the area from the U.S./Canada border to the U.S./Mexico border.

DATES: This inseason action became applicable on June 30, 2020, as announced on NMFS' telephone hotline and U.S. Coast Guard broadcast, and remains in effect until superseded or modified.

FOR FURTHER INFORMATION CONTACT: Peggy Mundy at 206–526–4323.

SUPPLEMENTARY INFORMATION:

Background

In the 2020 annual management measures for ocean salmon fisheries (85 FR 27317, May 8, 2020), NMFS announced management measures for the commercial and recreational fisheries in the area from Cape Falcon, OR, to the U.S./Mexico border, effective from 0001 hours Pacific Daylight Time (PDT), May 6, 2020, until the effective date of the 2021 management measures, as published in the **Federal Register**. NMFS is authorized to implement inseason management actions to modify fishing seasons and quotas as necessary to provide fishing opportunity while meeting management objectives for the affected species (50 CFR 660.409). Inseason actions in the salmon fishery may be taken directly by NMFS (50 CFR 660.409(a)—Fixed inseason management provisions) or upon consultation with the Pacific Fishery Management Council (Council) and the appropriate State Directors (50 CFR 660.409(b)—Flexible inseason management provisions). The state management agencies that participated in the consultation described in this document were: The Washington Department of Fish and Wildlife (WDFW), the Oregon Department of Fish and Wildlife (ODFW), and the California Department of Fish and Wildlife (CDFW).

Inseason Action

Inseason Action #7

Description of the action: Inseason action #7 extended retention of Pacific halibut caught incidental to the commercial salmon fishery past the June 30, 2020 end date set preseason.

Effective dates: Inseason action #7 took effect on June 30, 2020, and remains in effect until modified by further inseason action.

Reason and authorization for the action: The 2020 salmon management measures (85 FR 27317, May 8, 2020) authorize the retention of Pacific halibut caught incidental to the commercial salmon fishery in 2020 during April, May, and June, and after June 30, 2020, if quota remains and announced on the NMFS telephone hotline for salmon fisheries. The 2020 incidental Pacific halibut quota for the commercial salmon fishery is 44,899 pounds (20,366 kg) (weighed head off). Landings reported by the states, through June 17, 2020, totaled 3,566 pounds (1,618 kg) (weighed head off), leaving 92.1 percent of the quota unharvested. The NMFS West Coast Regional Administrator (RA) considered the landed catch of Pacific halibut to date, the amount of quota remaining, and the timing of the action relative to the length of the commercial salmon season, and determined that this inseason action was necessary to meet management goals set preseason. Inseason modification of the species that may be caught and landed during specific seasons is authorized by 50 CFR 660.409(b)(1)(ii).

Consultation date and participants: Consultation under 50 CFR 660.409(b) on inseason action #7 occurred on June 24, 2020. Representatives from NMFS, WDFW, ODFW, CDFW, and the Council participated in this consultation.

All other restrictions and regulations remain in effect as announced for the 2020 ocean salmon fisheries (85 FR 27317, May 8, 2020) and as modified by previous inseason action (85 FR 31707, May 27, 2020).

The RA determined that this inseason action, recommended by the state of Washington, was warranted based on the best available information on Pacific halibut landings to date and remaining Pacific halibut quota. The states manage the fisheries in state waters adjacent to the areas of the U.S. exclusive economic zone consistent with these Federal actions. As provided by the inseason notice procedures of 50 CFR 660.411, actual notice of the described regulatory action was given, prior to the time the action was effective, by telephone hotline numbers 206–526–6667 and 800–662–9825, and by U.S. Coast Guard Notice to Mariners broadcasts on Channel 16 VHF–FM and 2182 kHz.

Classification

NMFS issues this action pursuant to section 305(d) of the Magnuson-Stevens Act. This action is authorized by 50 CFR 660.409, which was issued pursuant to section 304(b), and is exempt from review under Executive Order 12866.

Pursuant to 5 U.S.C. 553(b)(B), there is good cause to waive prior notice and an opportunity for public comment on this action, as notice and comment would be impracticable and contrary to

the public interest. Prior notice and opportunity for public comment was impracticable because NMFS had insufficient time to provide for prior notice and the opportunity for public comment between the time halibut landing data were available to inform the decision to extend Pacific halibut retention and the June 30, 2020 closure established preseason. As previously noted, actual notice of the regulatory action was provided to fishers through telephone hotline and radio notification. This action complies with the requirements of the annual management measures for ocean salmon fisheries (85 FR 27317, May 8, 2020), the Pacific Coast Salmon Fishery Management Plan (FMP), and regulations implementing the FMP under 50 CFR 660.409 and 660.411.

There is good cause under 5 U.S.C. 553(d)(3) to waive the 30-day delay in effective date, as a delay in effectiveness of this action would prevent the fishery from accessing available Pacific halibut quota.

Authority: 16 U.S.C. 1801 *et seq.*

Dated: September 4, 2020.

Jennifer M. Wallace,

Acting Director, Office of Sustainable Fisheries, National Marine Fisheries Service.

[FR Doc. 2020–19996 Filed 9–9–20; 8:45 am]

BILLING CODE 3510–22–P

Proposed Rules

Federal Register

Vol. 85, No. 176

Thursday, September 10, 2020

This section of the FEDERAL REGISTER contains notices to the public of the proposed issuance of rules and regulations. The purpose of these notices is to give interested persons an opportunity to participate in the rule making prior to the adoption of the final rules.

FARM CREDIT ADMINISTRATION

12 CFR Parts 614, 615, 620 and 628

RIN 3052–AD27

Regulatory Capital Rules: Tier 1/Tier 2 Framework

AGENCY: Farm Credit Administration.

ACTION: Proposed rule.

SUMMARY: The Farm Credit Administration (FCA or we) seeks comments on this proposed rule that would amend regulatory capital requirements for Farm Credit System (System) institutions and clarify certain provisions in the Tier 1/Tier 2 Framework final rule that became effective in 2017. This proposed rule would incorporate, and further clarify, the guidance provided in FCA Bookletter—BL–068—Tier 1/Tier 2 Capital Framework Guidance. The proposal would also eliminate regulatory capital requirements for the Farm Credit Services Leasing Corporation, simplify the Safe Harbor Deemed Prior Approval calculation, revise the board resolution requirement for certain equities to be included in tier 1 or tier 2 capital, and amend the lending and leasing limit base to use total capital instead of permanent capital and eliminate the exceptional treatment of certain purchased stock. To maintain comparability in our regulatory capital requirements, we propose to amend certain definitions pertaining to qualified financial contracts in conformity with changes adopted by the Federal banking regulatory agencies.

DATES: Please send us your comments on or before November 9, 2020.

ADDRESSES: For accuracy and efficiency reasons, please submit comments by email or through FCA's website. We do not accept comments submitted by facsimile (fax), as faxes are difficult for us to process in compliance with section 508 of the Rehabilitation Act of 1973. Please do not submit your comment multiple times via different methods. You may submit comments by any of the following methods:

- *Email:* Send us an email at *reg-comm@fca.gov.*
- *FCA website: http://www.fca.gov.* Click inside the ''I want to . . .'' field near the top of the page; select ''comment on a pending regulation'' from the dropdown menu; and click ''Go.'' This takes you to an electronic public comment form.
- *Mail:* Jeremy R. Edelstein, Associate Director, Office of Regulatory Policy, Farm Credit Administration, 1501 Farm Credit Drive, McLean, VA 22102–5090.

You may review copies of all comments we receive at our office in McLean, Virginia or on our website at *http://www.fca.gov.* Once you are on the website, click inside the ''I want to . . .'' field near the top of the page; select ''find comments on a pending regulation'' from the dropdown menu; and click ''Go.'' This will take you to the Comment Letters page where you can select the regulation for which you would like to read the public comments.

We will show your comments as submitted, including any supporting data provided, but for technical reasons we may omit items such as logos and special characters. Identifying information that you provide, such as phone numbers and addresses, will be publicly available. However, we will attempt to remove email addresses to help reduce internet spam.

FOR FURTHER INFORMATION CONTACT: Jeremy R. Edelstein, Associate Director or Clayton D. Milburn, Senior Financial Analyst, Finance and Capital Markets Team, Office of Regulatory Policy, Farm Credit Administration, McLean, VA 22102–5090, (703) 883–4414, TTY (703) 883–4056; or

Mary Alice Donner, Senior Counsel or Jennifer A. Cohn, Senior Counsel, Office of General Counsel, Farm Credit Administration, McLean, VA 22102–5090, (703) 883–4020, TTY (703) 883–4056.

SUPPLEMENTARY INFORMATION:

Table of Contents

I. Introduction
A. Objectives of Proposed Rule
B. Background
II. Proposed Revisions to the Capital Rule
A. Substantive Revisions to the Capital Rule
1. Safe Harbor Deemed Prior Approval
2. Capital Bylaw or Board Resolution to Include Equities in Tier 1 and Tier 2 Capital
3. Common Cooperative Equity Issuance Date
4. Farm Credit Leasing Services Corporation
5. Lending and Leasing Limit Base Calculation
6. Qualified Financial Contract (QFC) Related Definitions
7. Common Equity Tier 1 Capital Eligibility Requirements
B. Clarifying and Other Revisions to the Capital Rule
1. Capitalization Bylaw Adjustment
2. Annual Report to Shareholder Corrections
3. Appropriate Risk-Weighting of Cash
4. Securitization Formulas
5. Unallocated Retained Earnings and Equivalents Deductions and Adjustments
6. Service Corporation Deductions and Adjustments
7. Adjustments for Accruing Patronage and Dividends
8. Bank Disclosures
9. Retirement of Statutory Borrower Stock
C. General Discussion
1. Continuously Redeemable Preferred Stock (H Stock)
2. Farm Credit Council Letter
3. Permanent Capital
III. Abbreviations
IV. Regulatory Flexibility Act

I. Introduction

A. Objectives of Proposed Rule

The FCA's objectives in proposing this rule are to:

- Provide technical corrections, amendments and clarification to certain provisions in the Tier 1/Tier 2 Capital Framework; and
- Ensure the System's capital requirements maintain comparability with the standardized approach that the Federal banking regulatory agencies have adopted.

B. Background

In 1916, Congress created the System to provide permanent, stable, affordable, and reliable sources of credit and related services to American agricultural and aquatic producers.[1] The System consists of 3 Farm Credit Banks, 1

[1] The Federal Agricultural Mortgage Corporation (Farmer Mac), which is also a System institution, has authority to operate secondary markets for agricultural real estate mortgage loans, rural housing mortgage loans, and rural utility cooperative loans. The FCA has a separate set of capital regulations that apply to Farmer Mac. This rulemaking does not affect Farmer Mac, and the use of the term ''System institution'' in this preamble and proposed rule does not include Farmer Mac.

agricultural credit bank, 67 agricultural credit associations, 1 Federal land credit association, service corporations, and the Federal Farm Credit Banks Funding Corporation (Funding Corporation). Farm Credit banks (which include both the Farm Credit Banks and the agricultural credit bank) issue System-wide consolidated debt obligations in the capital markets through the Funding Corporation, which enable associations to provide short-, intermediate-, and long-term credit and related services to farmers, ranchers, producers and harvesters of aquatic products, rural residents for housing, and farm-related service businesses.[2] The System's enabling statute is the Farm Credit Act of 1971, as amended (Act).[3]

FCA's Tier 1/Tier 2 Capital Framework final regulation (Capital Rule) was published in the **Federal Register** in July 2016.[4] The objectives of the Capital Rule were:

- To modernize capital requirements while ensuring that institutions continue to hold enough regulatory capital to fulfill their mission as a Government-sponsored enterprise (GSE);
- To ensure that the System's capital requirements are comparable to the Basel III framework and the standardized approach that the Federal banking regulatory agencies have adopted, but also to ensure that the rules take into account the cooperative structure and the organization of the System;
- To make System regulatory capital requirements more transparent; and
- To meet the requirements of section 939A of the Dodd-Frank Wall Street Reform and Consumer Protection Act of 2010 (Dodd-Frank Act).[5]

To date, the FCA believes the Capital Rule has met, and continues to meet, these stated objectives.[6]

On December 22, 2016, the FCA Board adopted FCA Bookletter—BL–068—Tier 1/Tier 2 Capital Framework Guidance (Capital BL).[7] The Capital BL provided additional guidance to ensure System institutions had the necessary information to correctly implement the requirements of the Capital Rule. The Capital BL included clarification and technical fixes on 18 separate items. Furthermore, the Capital BL stated: ''We intend to incorporate some of these items into the regulation in a future rulemaking project.'' [8] This proposed rule would incorporate some of that guidance, with adjustments as discussed below,[9] into the capital regulation. Additionally, the proposed rule would:

- Eliminate the stand alone capital requirements for Farm Credit Leasing Services Corporation (Farm Credit Leasing);
- Change the computation of the lending and leasing limit base in § 614.4351, by using total capital instead of permanent capital in the calculation; [10]
- Simplify ''Safe Harbor'' provisions that determine when System institutions have ''deemed prior approval'' from FCA to distribute cash payments;
- Revise and clarify certain criteria that capital instruments must meet to be included in common equity tier 1 (CET1) and tier 2 capital;
- Provide further clarification on when the ''holding period'' starts for including certain Common Cooperative Equities in CET1 or tier 2 capital; and
- Amend the requirement to adopt an annual board resolution with respect to prior approval requirements and the minimum redemption and revolvement periods for certain equities included in CET1 or tier 2 capital.

Finally, we propose to amend the definitions of ''Collateral agreement,'' ''Eligible margin loan,'' ''Qualifying master netting agreement (QMNA),'' and ''Repo-style transaction'' to incorporate amendments made to these definitions in the capital rules of the Federal banking regulatory agencies.[11]

The above amendments, as well as technical changes and other guidance on FCA's expectations for certain provisions of the Capital Rule, are described in greater detail below. FCA believes the additional proposed changes will address issues and concerns identified since the Capital Rule's effective date of January 1, 2017, while maintaining and supporting the objectives of the Capital Rule.

We welcome comments on every aspect of this proposed regulation, but there are certain areas described below where we are specifically seeking comment.

II. Proposed Revisions to the Capital Rule

A. Substantive Revisions to the Capital Rule

The amendments to the Capital Rule proposed and discussed in this section are substantive issues that go beyond technical corrections or incorporation of issues discussed in the Capital BL.

1. Safe Harbor Deemed Prior Approval

The proposal amends the ''Safe Harbor Deemed Prior Approval'' provisions under which System institutions are deemed to have prior approval from FCA to distribute cash payments as long as certain conditions are met. Existing § 628.20(f) requires System institutions to obtain prior approval from FCA before making any distributions of capital included in tier 1 or tier 2 capital.[12] Under the ''safe harbor'' provision in paragraphs (f)(5) and (6) of existing § 628.20, cash dividends, cash patronage, and cash redemptions or revolvements of common cooperative equities are deemed to have FCA prior approval, provided that:

(i) The equities meet applicable minimum holding period requirements;

(ii) After such cash payments, the dollar amount of CET1 capital equals or exceeds the dollar amount of CET1 capital on the same date in the previous calendar year; and

(iii) The institution continues to comply with all regulatory capital requirements and supervisory or enforcement actions.

Under the existing ''safe harbor,'' after the cash payment the dollar amount of CET1 capital must not decline compared to the dollar amount of CET1 capital on the same date in the previous calendar year.[13] FCA considers the date of the cash payment to be the date on which the institution's board passes a binding resolution declaring an amount it will make as a cashdividend or

[2] The agricultural credit bank lends to, and provides other financial services to farmer-owned cooperatives, rural utilities (electric and telephone), and rural water and waste water disposal systems. It also finances U.S. agricultural exports and imports, and provides international banking services to cooperatives and other eligible borrowers. The agricultural credit bank operates a Farm Credit Bank subsidiary.

[3] 12 U.S.C. 2001–2279cc. The Act is available at *www.fca.gov* under ''Laws and regulations,'' and ''Statutes.''

[4] 81 FR 49720 (July 28, 2016).

[5] Public Law 111–203, 124 Stat. 1376 (2010).

[6] For a more comprehensive discussion of this rulemaking, including a comprehensive discussion of all System capital requirements, see 81 FR 49720 and Parts 615 and 628 of FCA Regulations.

[7] A copy of the Capital BL can be found at *www.fca.gov,* under ''Laws & Regulations'' and ''Bookletters.''

[8] Id.

[9] FCA made adjustments to some of the guidance provided in the Capital BL to address concerns identified through ongoing monitoring and examination of the requirements of the Capital Rule.

[10] Total capital is defined at § 628.2. Permanent capital is defined at § 615.5201.

[11] The Federal banking regulatory agencies are the Office of the Comptroller of the Currency (OCC), the Board of Governors of the Federal Reserve System (FRB), and the Federal Deposit Insurance Corporation (FDIC).

[12] Section 628.20(f) outlines the requirements for FCA prior approval of capital redemptions and dividends.

[13] Section 628.20(f)(5)(ii).

patronage refund [14] (declaration date). We consider this declaration date to be the date in which the cash payment is made because it results in a binding legal obligation to pay a dividend or patronage refund to the institution's member-borrowers, the patronage amount is calculable within a short-time frame, and it is paid within 8.5 months of the close of the taxable year.

In practice, it is difficult for FCA to monitor and enforce the existing requirement to use the same date in the previous calendar year because System institutions report regulatory capital quarterly, not daily or monthly. Institutions can and do declare dividends or make patronage payments on any date during a calendar quarter. We propose to replace the requirement to use the exact calendar date on which the cash payment is made with a requirement to use the date of the quarter-end in which the System institution's board declares its dividend or patronage.

Under the proposal, a System institution has ''deemed- prior approval'' from FCA if, after making the cash payment, the dollar amount of the CET1 capital at the quarter-end after the declaration date, equals or exceeds the dollar amount of CET1 capital on the same quarter-end in the previous calendar year. The following is an example of our proposed deemed prior approval: A System institution's board declares a cash patronage on December 16, 2020. To use the ''Safe Harbor Deemed Prior Approval,'' the institution would need to ensure that after such payment, its dollar amount of CET1 capital on December 31, 2020, equals or exceeds the dollar amount of CET1 capital on December 31, 2019. As another example, a System institution's board declares a cash patronage on January 15, 2021. To use the ''Safe Harbor Deemed Prior Approval,'' the institution would need to ensure that after such payment, its dollar amount of CET1 capital on March 31, 2021, equals or exceeds the dollar amount of CET1 capital on March 31, 2020.[15] System institutions that declare patronage early in a quarter need to ensure that they have developed and implemented appropriate processes and controls to ensure compliance with these provisions.

We believe that this proposed amendment to the ''Safe Harbor Deemed Prior Approval'' would not increase or decrease the amount of cash patronage System institutions can pay when compared to the existing provision. As stated in the preamble to the final Tier 1/Tier 2 Capital Framework regulation, we expect institution boards to give significant thought to capital distribution decisions and how they impact the overall capitalization of their institution, especially a cash payment that exceeds net income over the past 12 months. Ordinarily, cash payments or redemptions (revolvements) are made at very predictable intervals, and we have not identified any situations where institutions are likely to need to make unplanned, significant capital distributions.[16]

2. Capital Bylaw or Board Resolution To Include Equities in Tier 1 and Tier 2 Capital

The proposal would amend the requirement in § 615.5200(d) that a System institution board adopt a redemption and revolvement resolution that it must re-affirm in its capital plan each year. It would also add a sentence to § 615.5200(b) with respect to capital adequacy plans.

Currently, to include otherwise eligible purchased or allocated equities in CET1 capital,[17] a System institution must commit to obtaining prior approval from FCA under § 628.20(f) before redeeming or revolving the equities less than 7 years after issuance or allocation. For tier 2 purchased or allocated equities, the institution must make a commitment not to call, redeem, or revolve the equities less than 5 years after issuance or allocation without FCA approval. Finally, boards must commit to obtaining prior approval from FCA before taking other specified actions that could impact the institution's capital quantity or quality.[18] A System institution's board must affirm these commitments by either adopting a capitalization bylaw or a resolution that must be re-affirmed by the board annually.

The proposal would move the existing requirements in § 615.5200(d) to a new section, § 628.21. Under proposed § 628.21, a System institution's board must either adopt a capitalization bylaw or adopt a binding resolution to obtain the FCA prior approval that § 628.20(f) requires. Under the proposed rule, to reduce burden, an institution's board would no longer need to re-affirm this resolution annually; instead, the System institution would be required to expressly acknowledge the continuing and binding effect of these resolutions annually in their capital adequacy plan. Proposed § 615.5200(b) would add to the existing provisions a requirement that the capital adequacy plan must expressly acknowledge the continuing and binding effect of the board resolutions.[19] Once the board adopts this resolution, it would remain binding going forward. Modifying or eliminating this binding resolution may impact an institution's ability to include allocated or purchased equities in tier 1 or tier 2 capital, if the change is not consistent with the requirements of proposed § 628.21 and § 628.20(b)(1)(xiv), (c)(1)(xiv), and (d)(1)(xi).

The capital adequacy plan acknowledgment would, at a minimum, outline the existence of such a resolution and assure that any equities issued, allocated, redeemed or revolved shall be done so in accordance with the resolution. Consistent with the existing rule, any issuance or allocation of equities that a System institution intends to include in tier 1 or tier 2 capital, must be designated either CET1, AT1, or tier 2 at time of issuance or allocation.[20] We note that, in these proposed changes, our intent that institutions must establish the permanence of their regulatory capital designations is unchanged, but the means by which institutions do so should be less burdensome.

[14] This can either be a specified dollar amount or must include language whereby an amount could be calculated.

[15] In both these examples, to use the ''Safe Harbor Deemed Prior Approval,'' the System institution would also need to ensure that after such cash payment, it continues to comply with all regulatory capital requirements and supervisory or enforcement actions. These examples assume a cash patronage payment and not the redemption or revolvement of common cooperative equities (CCEs). CCEs must be held for the minimum required holding period described in § 628.20(f)(5)(i) for redemption to qualify for deemed prior approval under the ''Safe Harbor.''

[16] See 81 FR 49735 (July 28, 2016).

[17] Otherwise eligible purchased or allocated equities would be equities that meet the criteria under § 628.20(b)(1) for inclusion in CET1 capital, such as allocated equities that will not be redeemed or revolved for at least 7 years.

[18] Existing § 615.5200(d)(3) requires boards to obtain prior approval before redesignating unallocated retained earning (URE) equivalents as redeemable equities; removing equities from regulatory capital (other than through repurchase, cancellation, redemption, or liquidation); or redesignating equities from one regulatory capital component to another. Section 615.5200(d)(4) requires that URE equivalents will not be revolved, except under very limited circumstances.

[19] Specifically, § 615.5200(b) would be amended to require that the plan shall expressly acknowledge the continuing and binding effect of all board resolutions adopted in accordance with sections 628.20(b)(1)(xiv), 628.20(c)(1)(xiv), 628.20(d)(1)(xi), and 628.21. Conforming changes are being proposed to those sections to refer to new § 628.21 instead of § 615.5200(d).

[20] Under existing § 615.5200(d)(3)(iii), which is proposed to be redesignated as § 628.21(c)(3), a System institution cannot redesignate equities included in one component of regulatory capital for inclusion in another without FCA prior approval. Accordingly, the regulatory capital classification (*i.e.,* CET1, AT1, or tier 2) must be designated at issuance.

3. Common Cooperative Equity Issuance Date

The proposal adds a new definition to part 628 to provide clarification and certainty to System institutions on the start of the holding period to include certain common cooperative equities in CET1 or tier 2 capital and redeem them under the ''Safe Harbor Deemed Prior Approval''. Proposed § 628.21(e) states that the minimum redemption and revolvement period for purchased and allocated equities starts on the common cooperative equity issuance date, as defined in § 628.2.

As discussed above, to include otherwise eligible purchased or allocated equities in CET1 or tier 2 capital, a System institution must commit to obtaining prior approval from FCA under § 628.20(f) before redeeming or revolving the equities in less than 7 or 5 years, respectively, after issuance or allocation. In December 2016, FCA provided guidance to the System on when the holding period starts for purchased and allocated equities, as follows:

> The minimum holding period starts on the issuance date, which is the date the institution segregates its ''new'' allocated equities (qualified and nonqualified) from its URE. This generally occurs after the board adopts a resolution to make a patronage distribution in cash and equity, and the institution makes accounting entries that move the dollar amounts from URE to an appropriate payable account and allocated equity.[21]

The proposed definition of ''common cooperative equity issuance date'' is similar to the guidance previously provided by FCA; however, as proposed the issuance date would be the quarter-end in which the board has declared a patronage refund and the applicable accounting treatment has taken place. As an example, a System institution board adopts a resolution to make a patronage distribution in cash and equity on December 15, 2020.[22] On January 2, 2021, it makes a general ledger entry that moves the dollar amounts from URE to an appropriate payable account and allocated equity. The general ledger entry is made effective December 31, 2020 and is reflected in the yearend 2020 financial statements. On April 5, 2021, dollar amounts are assigned to each borrower. In this example, the ''Common cooperative equity issuance date'' would be December 31, 2020. If the System institution includes the equities in CET1 capital, they would need to hold the equities for at least 7 years from December 31, 2020 (*i.e.,* December 31, 2027) to meet the minimum holding period requirement.

The holding period start date for purchased stock is slightly different from the holding period start date for allocated equities. Members purchase stock as a requirement of membership to borrow from the institution and the institution's bylaws allow for such issuance. Purchased stock would not result in a reallocation or reassignment of URE, but would result in new equity for the System institution. Accordingly, the holding period on purchased stock would be the quarter-end in which the System institution recognizes the stock on its financial statement.

We note that section 628.20(b)(1)(xiv)(B) allows for the statutory minimum borrower stock requirement to count as CET1 capital without any minimum holding period.[23] The statutory minimum borrower stock requirement under section 4.3A of the Act, is $1,000 or 2 percent of the loan amount, whichever is less.

FCA believes this new approach to recognizing the start of the holding period, when combined with other proposed ''Safe Harbor'' related changes, results in a simplified ''Safe Harbor'' framework. More specifically, using the quarter-end date for the start of the holding period aligns with the proposed changes to the ''Safe Harbor Deemed Prior Approval,'' which we discuss above. As proposed, the ''Safe Harbor'' also would use a date that is the quarter-end after a board has declared a patronage payment. Furthermore, we believe using a quarter-end date reduces the burden for System institutions to track and monitor the amount of time equities have been outstanding. It also improves FCA's ability to monitor and enforce the ''Safe Harbor'' requirements.

Question 1: The FCA seeks comments on whether the new definition of ''Common cooperative equity issuance date'' creates a burden for System institutions due to the changes in established controls and processes that may be required. Please provide support for your position.

4. Farm Credit Leasing Services Corporation

The proposal removes Farm Credit Leasing from the list of institutions defined as System institutions in §§ 615.5201 and 628.2.[24] Under the proposal, Farm Credit Leasing as a stand-alone entity would no longer be required to meet minimum capital and related regulatory requirements under part 615, subpart H, and part 628 of our regulations because of its current ownership status, as discussed below. If this ownership status were to change in the future, we would reassess the need for Farm Credit Leasing to independently meet capital requirements.[25]

Farm Credit Leasing was previously owned by a group of System institutions but is now a wholly owned subsidiary of CoBank.[26] It is a business unit of the bank; profits and losses of the entity are accrued to the bank; and its assets and liabilities are consolidated with the bank's for financial and regulatory reporting purposes. CoBank's consolidation of Farm Credit Leasing ensures that minimum capital is appropriately held against Farm Credit Leasing's assets. The proposal would reduce the regulatory burden created by separately applying the minimum capital requirements and relevant capital regulations to Farm Credit Leasing on a stand-alone basis. The proposed change is not intended to reduce the amount of capital that must be held against Farm Credit Leasing and CoBank's combined assets.

Question 2: The FCA seeks comment on the appropriateness of removing the specific reference to Farm Credit Leasing from these provisions.

5. Lending and Leasing Limit Base Calculation

The proposal would amend § 614.4351 to change the composition and calculation of each System bank

[21] See Capital BL, item 7.

[22] As discussed elsewhere in this preamble, the board declaration must include an amount it will pay in patronage or must include language whereas an amount could be calculated because it provides evidence of the board's intent to obligate the institution to pay a specific patronage amount to its member-borrowers.

[23] As discussed in greater detail under section 7—Common Equity Tier 1 Capital Eligibility Requirements, statutory minimum borrower stock ''funded'' through the creation of a non-interest-bearing account receivable is not eligible for inclusion in CET1 or tier 2 capital.

[24] Farm Credit Leasing is a service corporation chartered under section 4.25 of the Act. A service corporation is a System institution established by System banks or associations and chartered by FCA, and it is subject to FCA regulation and examination. See title IV, subpart E of the Act.

[25] The definitions of ''System institution'' allows us to include any FCA-chartered institution that we determine should be included, even if it is not specifically referenced.

[26] In 1983, several System banks acquired an existing non-System corporation in the lease financing business that became Farm Credit Leasing. Farm Credit Leasing offers leasing services and related products to agribusiness, agricultural producers, rural infrastructure companies, and other related partners. As the System consolidated, the number of bank owners of Farm Credit Leasing declined. In 2004, CoBank acquired all Farm Credit Leasing stock outstanding, making it a wholly-owned subsidiary of the bank.

and association's lending and leasing limit base. The existing lending and leasing limit base is equal to the amount of a System institution's permanent capital as adjusted for the calculation of the permanent capital ratio in accordance with § 615.5207, and with two additional adjustments in § 614.4351(a) that apply only to the lending limit base. Section 614.4351(a)(1) provides that a System institution may count in its lending limit base any stock it purchases from another System institution in connection with the sale of a loan participation interest, and the other institution must exclude such stock from its lending limit base. Section 614.4351(a)(2) provides that any otherwise eligible third-party capital instruments may be included in the lending limit base of a System institution, irrespective of the limits on third-party capital for the tier 1/tier 2 capital ratios as outlined under § 628.23.

We propose two amendments to § 614.4351. First, instead of using permanent capital to calculate the lending limit base, institutions would use total capital as defined and adjusted in §§ 628.20 through 628.22 but including any otherwise eligible third-party capital that would be excluded under § 628.23. Second, we would eliminate the exceptional treatment of stock purchased in connection with a loan participation in § 614.4351(a)(1).

Our proposal to eliminate the existing exceptional treatment of stock purchased in connection with loan participations would align the lending and leasing limit base with the Capital Rule's treatment of investments in other System institutions. The Capital Rule requires institutions to deduct their investments in another System institution because it is the issuing institution, not the investing institution, that has discretion whether or not to retire the investment. FCA believes that equities should be counted in the regulatory capital and the lending and leasing limit base of the institution that has control of the equities. This is a more accurate reflection of where the capital is available to absorb losses.

Our proposal would preserve the existing provision in § 614.4351(a)(2) which allows the inclusion of all otherwise qualifying third-party capital in the lending limit base, irrespective of limits on the inclusion of such instruments in regulatory capital under § 628.23. The requirements of § 628.23 recognize and emphasize the cooperative principles upon which System institutions operate by limiting the amount of non-cooperative equities that may be included in regulatory capital. Accordingly, we propose to continue to permit institutions to include all otherwise qualifying third-party capital in their lending limit base.

Our proposed changes to the calculation would result in modest changes in System institutions' lending limits.[27] Using total capital as the base instead of permanent capital would increase the lending and leasing limit for most System institutions due primarily to the inclusion of at least a portion of the allowance for loan losses in total capital.[28] A small number of System institutions would see their lending limit decline due to various factors.[29] If both amendments are adopted, we estimate that about 16 institutions' lending limits would modestly decrease.[30] We note that most institutions have adopted policies that set significantly lower lending limits than the current regulation allows.

We adopted the Capital Rule to improve the quality and quantity of a System institution's capital, consistent with the objectives of the Basel III framework and the standardized approach of the Federal banking regulatory agencies (U.S. Rule). Accordingly, since 2017, FCA has focused on regulatory tier 1 and tier 2 capital when evaluating the safe and sound operation of a System institution rather than on permanent capital.[31] Similarly, we believe it is more appropriate to base the lending and leasing limit on the regulatory total capital of the institution and not on permanent capital.

Question 3: The FCA seeks comment on the proposed change to the lending base, and the continued appropriateness of the adjustment required in § 614.4351(a)(1), and whether its removal would have any significant adverse impacts on any System institution.

6. Qualified Financial Contract (QFC) Related Definitions

We are proposing to amend the definitions of ''Collateral agreement,'' ''Eligible margin loan,'' ''Qualifying master netting agreement (QMNA),'' and ''Repo-style transaction'' to incorporate amendments made to these definitions in the capital rules of the Federal banking regulatory agencies. Furthermore, the proposed amendment to the definition of ''QMNA'' will harmonize it with the amended definition of ''Eligible master netting agreement (EMNA)'' in FCA's Margin and Capital Requirements for Covered Swap Entities regulation (Swap Margin Rule).[32]

As part of the broader regulatory reform effort following the financial crisis, to increase the resolvability and resiliency of U.S. global systemically important banking institutions (GSIBs), the Federal banking regulatory agencies adopted final rules that establish restrictions on, and requirements for, certain financial contracts of GSIBs and their subsidiaries (QFC Rules).[33] Generally, these QFC Rules require covered qualified financial contracts [34] of covered entities (GSIBs and U.S. operations of foreign GSIBs) to contain contractual provisions that opt into the ''temporary stay-and-transfer treatment'' of the Federal Deposit Insurance Act (FDI Act) [35] and Title II of the Dodd-Frank Act, thereby reducing the risk that

[27] Under § 614.4360(b)(2), loans funded pursuant to a commitment that was within the lending and leasing limit at the time the commitment was made would not violate the lending and leasing limit if the limit subsequently declines.

[28] Under § 628.20(d)(3), tier 2 capital (a component of total capital) includes the allowance for loan losses up to 1.25 percent of the institution's total risk-weighted assets not including any amount of the allowance.

[29] As of September 30, 2019, the vast majority of System institutions (banks and associations) would see their lending limit increase by 2.8 percent on average, with increases ranging from 0.5 percent to 8.3 percent. Two system institutions would see an average decrease of 2.2 percent.

[30] Including both the switch from permanent capital and the elimination of the loan participation-related treatment under § 614.4351(a)(1), 56 institutions would see their lending limit increase by 3.0 percent on average. The decrease at the remaining institutions would average 1.6 percent.

[31] Section 301 of the Agricultural Credit Act of 1987 directed the FCA to adopt risk-based permanent capital regulations for System institutions.

[32] See 83 FR 50805 (October 10, 2018).

[33] See 82 FR 56630 (November 29, 2017) (OCC); 82 FR 50228 (October 30, 2017) (FDIC); and 82 FR 42882 (September 12, 2017) (FRB).

[34] Qualified financial contracts generally include financial contracts for a derivative contract, repurchase agreement, reverse purchase agreement, and securities lending and borrowing agreement. When an entity goes into resolution under the U.S. Bankruptcy Code, attempts by the debtor entity's creditors to enforce their debt through any means other than participation in the bankruptcy proceeding, such as seizing collateral, are generally blocked by the imposition of an automatic stay (See 82 FR 42882, 42886 (September 12, 2017) citing 11 U.S.C. 362). However, the U.S. Bankruptcy Code generally exempts QFC counterparties of the debtor from the automatic stay through ''safe harbor'' provisions (See 11 U.S.C. 362(b)(6), (7), (17), (27), 362(o), 555, 556, 559, 560, 561. The U.S. Bankruptcy Code specifies the types of parties to which the safe harbor provisions apply). Under these provisions, any rights that a QFC counterparty has to terminate the contract, set off obligations, and liquidate collateral in response to a direct default are not subject to the stay and may be exercised against the debtor immediately upon default. We note that the Bankruptcy Code does not use the term ''qualified financial contracts,'' but the set of transactions covered by its safe harbor provisions closely tracks the set of transactions that fall within the definition of ''qualified financial contract'' used in Title II of the Dodd-Frank Act.

[35] 12 U.S.C. 1811 et. seq.

the stay-and-transfer treatment would be challenged by a covered entity's counterparty or a court in a foreign jurisdiction. The stay-and-transfer treatment provides that the rights of a failed insured depository institution's or financial company's counterparties to terminate, liquidate, or net certain qualified financial contracts upon the appointment of the FDIC as receiver are temporarily stayed to allow for the transfer of the failed entities' qualified financial contracts to a solvent party.[36]

As a result of the QFC Rules, the Federal banking regulatory agencies amended the definition of QMNA in their capital rules to prevent the QFC Rules from having a disruptive effect on the netting sets of their supervised institutions. The amended definition of QMNA is substantially similar to the previous definition and continues to recognize that default rights may be stayed if the financial company is in resolution under the Dodd-Frank Act or FDI Act, a substantially similar law applicable to GSEs, or a substantially similar foreign law, or where the agreement is subject by its terms to any of those laws.[37] However, the amended definition includes additional language permitting a master netting agreement to meet the definition of QMNA to the extent necessary to comply with the requirements of the QFC Rules even if the agreement limits the right to accelerate, terminate, and close-out on a net basis all transactions under the agreement and to liquidate or set-off collateral promptly upon an event of default of a counterparty. We are proposing a parallel change.

Additionally, the Federal banking regulatory agencies amended the definitions of ''Collateral agreement,'' ''Eligible margin loan,'' and ''Repo-style transaction'' to ensure that their supervised institutions can continue to recognize the risk-mitigating effects of financial collateral received in a secured lending transaction, repo-style transaction, or eligible margin loan.[38] The amendments to these definitions include conforming changes to provide that a counterparty's default rights may be limited as required by the QFC Rules.

In order to remain consistent, to the extent practical, with the capital rules of the Federal banking regulatory agencies, as well as aligning the definition of ''Qualifying master netting agreement'' with the recent amendments to the definition of ''Eligible master netting agreement'' in FCA's Swap Margin Rule, we propose to adopt parallel amendments to the definitions of ''Collateral agreement,'' ''Eligible margin loan,'' ''Qualifying master netting agreement,'' and ''Repo-style transaction.'' While the QFC rules primarily apply to GSIBs supervised by one of the Federal banking regulatory agencies, a System institution, as a counterparty to a GSIB, may need to ensure its qualified financial contracts include this new language recognizing the close-out restrictions imposed by the QFC Rules.

Without the proposed definitional changes, System institutions could potentially see higher capital charges imposed on certain counterparty exposures. The current definitions in our Capital Rule do not recognize the close-out restrictions on certain qualified financial contracts newly imposed by the QFC Rules. If a System institution incorporates these new close-out restrictions in contracts with an entity subject to the QFC Rules (*i.e.,* GSIBs), the contract may not meet the existing definition of ''Collateral agreement,'' ''Eligible margin loan,'' ''Qualifying master netting agreement,'' and ''Repo-style transaction'' in FCA's Capital Rule. As a result, a System institution may lose its ability to net offsetting exposures or recognize the risk-mitigating effects of financial collateral, thus resulting in a higher capital requirement for the System institution. Moreover, a System institution engaging in a derivative transaction that is subject to an EMNA, as defined in the Swap Margin Rule,[39] would lose the ability to net offsetting exposures for capital purposes. The proposed changes to the definitions of these terms would avoid these issues.

The changes to these definitions do not result in System institutions waiving or eliminating their ability to exercise their rights against a defaulting party. Rather, consistent with other GSIB counterparties, the System institution would not be able to immediately exercise its rights against a defaulting party until the FDIC begins an orderly resolution of the counterparty. If a System institution is not transacting with an entity subject to the QFC Rules, these new restrictions would not be applicable.

Question 4: To what extent would the QFC Rules impact System institutions as counterparties to GSIBs or to U.S. operations of foreign GSIBs? For example, if FCA did not amend these definitions, what would be the result?

7. Common Equity Tier 1 Capital Eligibility Requirements

As discussed above, one of FCA's objectives in the Capital Rule is to ensure that the System's capital requirements are comparable to the Basel III framework and the U.S. Rule, taking into account the cooperative structure of the System.[40] The Basel III framework specified the criteria that capital instruments must meet in order to be included in the different capital measures. Among these criteria is the requirement that an instrument be directly issued and paid-in.[41] We are proposing to add the term ''paid-in'' to the eligibility criteria for CET1 capital in § 628.20(b)(1)(i), consistent with the criteria set forth in the Basel III framework and the U.S Rule.[42] Basel III defines paid-in capital as capital that (1) has been received with finality by the institution, (2) is reliably valued, (3) is fully under the institution's control, and (4) does not directly or indirectly expose the institution to the credit risk of the investor.[43]

When we promulgated the Capital Rule, we did not require CET1 instruments to be paid-in because we had interpreted the term to exclude allocated equities. Allocated equities are the earnings of a System institution that the institution has converted to stock or to similar stock-like equities and allocated to member-borrowers.[44] Farm Credit banks routinely allocate equities to their affiliated associations and (in CoBank's case) to retail borrowers, and many of the associations routinely allocate equities to their retail borrowers. We have reexamined the attributes of allocated equities and determined that they fully meet the definition of paid-in capital: The allocated equities are received with finality by the allocating System institution when earned and issued; their value is reliably established as the dollar value of institution net assets allocated; they are fully under the institution's control because they can be revolved only at the discretion of the System institution, with the prior

[36] 12 U.S.C. 1821(e)(10)(B), 5390(c)(10)(B).

[37] Importantly, the Agriculture Improvement Act of 2018 amended section 5.61 of the Act to give the Farm Credit System Insurance Corporation receivership authorities parallel to those of the Federal banking regulatory agencies. Public Law 115–334, 132 Stat 4490 (2018).

[38] See 82 FR 50228 (October 30, 2017) for further discussion.

[39] See 83 FR 50805 (October 10, 2018).

[40] See 81 FR 49720 (July 28, 2016).

[41] See BCBS, Basel III: A Global Regulatory Framework for More Resilient Banks and Banking Systems, December 2010 (as revised June 2011).

[42] See 12 CFR 217.20(b)(1)(i) (FRB); 12 CFR 324.20(b)(1)(i) (FDIC); 12 CFR 3.20(b)(1)(i) (OCC).

[43] See BCBS, Basel III Definition of capital—Frequently Asked Questions, September 2017 (update of FAQs published in December 2011).

[44] For a detailed discussion on allocated equities and its stock-like characteristics, see 81 FR 49727 (July 28, 2016).

approval of the FCA;[45] and the loss-absorbing capacity of the allocated equities is not dependent on the creditworthiness of the member-borrower. We do not expect the proposed clarification to have any impact on System institution practices with respect to allocated equities.

FCA views the statutorily required borrower stock financed by the System institution as part of an overall loan commitment as meeting the Basel III criteria for paid-instruments.[46] However, borrower stock is not suitable for inclusion in CET1 if it is funded using non-interest-bearing account receivables.[47]

We also propose a conforming change in § 628.20(d)(1)(i) to clarify that all instruments included in tier 2 capital must be issued and paid-in.

In addition, we are proposing minor changes to § 628.20(b)(1)(i) and (b)(1)(ii) to align the language more closely to the language in the U.S. Rule and at the same time to emphasize a difference from the U.S. Rule. Specifically, the U.S. Rule requires CET1 instruments to entitle the holder to a claim on residual assets (after all senior claims have been satisfied) that is proportional to the holder's share of issued capital. Our rule does not require the equity holder's claim to be proportional. This is because, unlike commercial banks and mutual associations that do not allocate equities, System institutions may have liquidation bylaws that prioritize residual payments among different classes of common cooperative equityholders if there are assets remaining after all classes have received par or face value of their equities. We believe these changes to § 628.20(b)(1) are not substantive.

B. Clarifying and Other Revisions to the Capital Rule

The proposed amendments to the Capital Rule discussed in this section incorporate issues discussed in the Capital BL, with appropriate adjustments. In addition, we propose to make other changes to the Capital Rule that clarify Agency position.

1. Capitalization Bylaw Adjustment

Section 615.5220(a)(6) requires System institutions to include in their capitalization bylaws a provision stating that equities other than those protected under section 4.9A of the Act are retireable at the sole discretion of the board, provided minimum capital adequacy standards established in subpart H of this part (615) and part 628 of this chapter are met. We propose to amend this section by replacing the reference to parts 615 and 628 with a general reference to FCA regulations. A general reference to FCA's capital adequacy standards would satisfy the requirement to reference parts 615 and 628 and would incorporate all capital requirements of the FCA, as well as any future capital requirements that could potentially be adopted under a new or different part.

If a System institution has already amended its capitalization bylaws to include a reference to both part 615 and 628, it would not need to amend its capitalization bylaws to replace those references with a general reference to capital adequacy standards established by FCA. As discussed above, a reference to both part 615 and part 628 would satisfy the proposed requirement for an institution's capitalization bylaws to include a general reference to capital adequacy standards established by FCA. However, if the bylaws reference only part 615 subpart H, or reference only part 628, this would not satisfy the requirement we are proposing. In these instances, a System institution would have to amend its capitalization bylaws to include a general reference to capital adequacy standards established by FCA.

System institution changes to its bylaws to conform to this regulatory requirement should not change any substantive rights of the System institution or its member-borrowers. If the change is non-substantive and does not alter, reduce, or increase the rights of any member-borrowers, a System institution's board may choose to make a conforming change to their capitalization bylaws to include a general reference to regulatory capital adequacy standards without a vote by its member-borrowers, assuming such bylaws allow for technical amendments without a shareholder vote.

2. Annual Report to Shareholder Corrections

In existing § 620.5, which lists the required contents of a System institution's annual report, we propose technical revisions to ensure institutions report financial data as we intended. System associations must report their tier 1 leverage ratio in each annual report for each of the last 5 fiscal years. This requirement was inadvertently placed in paragraph (f)(4)(iv) of § 620.5. We propose to move the requirement from § 620.5(f)(4)(iv) and place it in proposed § 620.5(f)(3)(v), as originally intended.

In addition, we propose to amend the requirement in § 620.5(f)(4) that System institutions report core surplus, total surplus, and the net collateral ratio (banks only) in a comparative columnar form for each fiscal year ending in 2012 through 2016. System institutions must currently report these ratios in each annual report through 2021, in addition to reporting the capital ratios required under § 620(f)(2) and (3), resulting in System institutions reporting capital ratios beyond the 5-year requirement established in § 620.5(f). Accordingly, we propose to revise § 620.5(f)(4) to require these disclosures in each annual report through 2021 but only as long as these ratios are part of the previous 5 fiscal years for which disclosures are required. For example, the fiscal year ending 2020 annual report to shareholders would report the permanent capital ratio, CET1 capital ratio, tier 1 capital ratio, total capital ratio, and tier 1 leverage ratio for the fiscal years ending in 2017–2020, and the core surplus ratio, total surplus, ratio, and net collateral ratio for the fiscal year ending in 2016 only.

3. Appropriate Risk-Weighting of Cash

Existing § 628.32(l)(1) states, among other things, that a System institution must assign a 0-percent risk-weight to cash held in accounts at a depository institution. This provision may create confusion about the proper risk-weight for deposits that exceed the limit of FDIC deposit insurance coverage (currently set at $250,000). Accordingly, we propose to delete this provision. It is unnecessary to address in § 628.32(l)(1) the risk-weight assigned to cash held in depository institution accounts, because other provisions more accurately address this risk-weight. Specifically, § 628.32(a)(1)(i)(B) requires

[45] See §§ 628.20(b)(1)(iii) and (d)(x).

[46] For example, System institutions usually increase a borrower's loan commitment by $1,000 in order to cover the stock or participation certificate purchase. While the loan commitment will increase by $1,000, those funds are not disbursed to the borrower and are retained by the institution to cover the purchase. We note that under FCA Regulation § 628.20(b)(1)(x), statutory borrower stock required under section 4.3A of the Act is not considered to be ''directly or indirectly'' funded as long as: (A) The purpose of the loan is not the purchase of capital instruments of the System institution providing the loan, and (B) the purchase of acquisition of one or more member equities of the institution is necessary in order for the beneficiary of the loan to become a member of the institution. This approach follows the approach of the European Banking Authority regarding the standards for CET1 instruments for cooperatives. See 79 FR 52824 (September 4, 2014) for additional discussion.

[47] ''Stock'' funded in this manner has not been received with finality by the System institution and exposes the System institution to the credit risk of the borrower. On December 27, 2019, the FCA Board used its reservation of authority in § 628.1(d)(2)(i) to determine that borrower stock funded through the creation of a non-interest-bearing account receivable in the borrower's name has characteristics and terms that diminish its ability to absorb losses and is not suitable for inclusion in CET1 or tier 2 capital.

a System institution to assign a 0-percent risk-weight to the portion of an exposure that is directly and unconditionally guaranteed by the U.S. Government, its central bank, or a U.S. Government agency, including a deposit or other exposure or the portion of a deposit or other exposure that is insured or otherwise unconditionally guaranteed by the FDIC or National Credit Union Administration. Section 628.32(d)(1) requires a System institution to assign a 20-percent risk-weight to exposures to U.S. depository institutions and credit unions that are not assigned a 0-percent risk-weight under § 628.20(a)(1)(i)(B). We confirm that the 20-percent risk-weight applies, for example, to a System institution's deposit with an FDIC-insured bank of funds in excess of the deposit insurance coverage of $250,000.

Existing § 628.32(l)(1) also states that System institutions must assign a 0-percent risk-weight to cash held in accounts at a Federal Reserve Bank. We propose to remove this provision because it is redundant. Section 628.32(a)(1)(i)(A) assigns a 0-percent risk-weight to an exposure to the central bank of the United States government, which includes Federal Reserve Banks.

Finally, we propose to revise § 628.32(l)(1) to add a provision generally assigning a 0-percent risk-weight to gold bullion held in the System institution's own vaults. The existing provision already generally assigns a 0-percent risk-weight to gold bullion held in the vaults of a depository institution.

4. Securitization Formulas

The proposed rule would correct 3 formulas used in the simplified supervisory formula approach (SSFA) equation under § 628.43(d) and one formula used in the simple risk-weight approach (SRWA) under § 628.52. These formulas were printed incorrectly in the **Federal Register** version of the Tier 1/Tier 2 Capital Framework final rule. We previously provided the correct formulas in our Capital BL. These are technical corrections to ensure these approaches are calculated correctly.

5. Unallocated Retained Earnings and Equivalents Deductions and Adjustments

The proposed rule would clarify the calculation of the requirement described in § 628.10 that at least 1.5 percent of the 4 percent tier 1 leverage ratio minimum must consist of URE and URE equivalents (UREE). The Capital Rule did not specify how to calculate this requirement. In our Capital BL, we provided guidance to System institutions on the deductions to make when calculating this minimum URE and UREE requirement.[48] We stated: ''When calculating the URE and URE equivalents requirement for the leverage ratio, a System institution must deduct from the numerator an amount equal to all the deductions required under § 628.22(a). All deductions made to the denominator when calculating the tier 1 leverage ratio must be made to the denominator when calculating the URE and URE equivalents requirement.'' [49]

We propose to add the Capital BL guidance to § 628.10. We also propose to require System institutions to deduct purchased equity investments that are required to be deducted under the corresponding deduction approach in § 628.22(c). The URE and UREE measure, because it is a component of the tier 1 leverage ratio, should have similar deductions.[50] While the URE and UREE measure represents only a part of the numerator of the tier 1 leverage ratio, our previous guidance to deduct such amounts only from § 628.22(a) resulted in the majority of System institution's URE and UREE measures being higher than the tier 1 leverage ratio, which was not our intention. We believe our proposed deduction of purchased stock under § 628.22(c) will have a minimal impact on System institutions and will not result in any System institution's URE and UREE measure falling below the regulatory minimum.[51] In addition, when calculating the URE and UREE measure, System institutions must continue to use the same denominator as the tier 1 leverage ratio. The denominator is equal to the institution's average total consolidated assets as reported on the institution's Call Report minus amounts deducted from tier 1 capital under §§ 628.22(a), and (c) and 628.23.[52]

Question 5: The FCA seeks comment on the appropriate deductions and adjustments that should be made to URE and URE equivalents in determining compliance with § 628.10(b)(4).

6. Service Corporation Deductions and Adjustments

The proposed rule would expand the requirement under existing § 628.22(a)(6) for a System institution to deduct any allocated equity investment in another System institution, which is defined in part 628 to mean each System bank or association,[53] by requiring a System institution also to deduct any allocated equity investment in a System service corporation.

Although we do not know of any allocation of equities by a service corporation to another institution in the System, a service corporation's bylaws may permit it to allocate equities to another System institution. The allocated equity is retained, controlled, and at risk at the service corporation. Therefore, consistent with FCA's stated position that equities should be counted in the regulatory capital of the System institution that has control of the equities rather than at the System institution that does not control them, these allocated equities should be counted at the service corporation as applicable, and deducted from the regulatory capital of the recipient System institution.

Question 6: The FCA seeks comment on whether any System institution has received an allocated equity investment from a service corporation.

7. Adjustments for Accruing Patronage and Dividends

We propose to amend the regulatory capital adjustment and deduction requirements under § 628.22 by including in proposed § 628.22(b) the existing requirement to reverse any accruals of patronage or dividend payables or receivables that occur prior to a board declaration resolution.[54] Under GAAP, institutions that make patronage and dividend payments that can be reasonably estimated on a regular and routine basis may accrue those payments as payables. Similarly, institutions that receive patronage and dividend payments that can be reasonably estimated on regular and

[48] See Capital BL, item 4.

[49] Section 628.10(c)(4) requires the amounts deducted under §§ 628.22(a) and (c) and 628.23 to be deducted from tier 1 capital when calculating the tier 1 leverage ratio. However, the deductions under §§ 628.22(c) and 628.23 were not applied to the numerator when calculating the URE and UREE requirement as they do not increase the URE of a System institution.

[50] We do not find it necessary to require the deductions under § 628.23 as third-party stock is not a component of URE, UREE, or CET1 capital.

[51] As of September 30, 2019, the inclusion of deductions under § 628.22(c) in the computation of the URE and UREE measure would have decreased the ratio at System institutions by 1 percent on average. With computations including the deductions under § 628.22(c), all institutions remain well above the regulatory minimum.

[52] As of the date of this proposal, this would be total average assets for leverage ratio on schedule RC–R.5, line 1.d.

[53] ''System institution'' is defined in existing § 628.2 as ''a System bank, an association of the Farm Credit System, . . . and any other institution chartered by the FCA that the FCA determines should be considered a System institution for the purposes of this part.'' The FCA has not made any determinations to include other institutions in this definition.

[54] See existing Call Report instructions for Schedule RC–R.4, Line item 3 at *https://www.fca.gov/bank-oversight/fcs-call-reports.*

routine basis may accrue those payments as receivables. Many System institutions accrue these payables or receivables on their balance sheet prior to the board adopting a declaration resolution. For regulatory capital purposes only, these institutions must adjust their unallocated retained earnings as follows:

- If a System institution accrues a patronage or dividend receivable prior to the date of the board declaration resolution by the paying institution, then it must subtract this accrual from its URE.
- If a System institution accrues a patronage or dividend payable to either another institution or a borrower prior to the date of its board declaration resolution, then it must add it back to URE.

If the System institution chooses not to accrue a payable or receivable until it is declared by the board, then no adjustments to regulatory capital are necessary. Any adjustment to accruals made pursuant to this provision is applicable only to regulatory capital measures as reported to FCA.

8. Bank Disclosures

The proposed rule would amend § 628.63(b)(4) by requiring banks to disclose a reconciliation of their regulatory capital elements as they relate to their balance sheets in any audited consolidated financial statements. We propose to add the word ''applicable'' before ''audited'' to clarify that this reconciliation requirement applies only to current period financial statements that are audited. There is no requirement to reconcile with audited financial statements from previous quarters. Specifically, if a System bank audits only its year-end financial statements, and not its quarterly financial statements (as is the general practice of System banks), this requirement would apply only to the bank's annual report to shareholders. The reconciliation applies to quarterly shareholder reports only if the reports are audited.

We also propose to require System banks to disclose the reconciliation of regulatory capital elements using both point-in-time and three-month average daily balance regulatory capital values. Section 628.10(a) requires a System institution to compute its regulatory capital ratios using average daily balances for the most recent 3 months. Existing § 628.63(b)(4) does not specify whether to complete the reconciliation using point-in-time or average daily balance regulatory capital values.

FCA has long required institutions to compute their capital ratios using three-month average daily balances; so we believe it is appropriate that the reconciliation to any applicable audited consolidated financial statements also use the three-month average daily balances. One of the primary purposes of this requirement is to address the disconnect between the numbers used for the calculation of regulatory capital and the numbers used in published financial statements. Because FCA measures and monitors regulatory capital using average daily balances, we believe the reconciliation using average daily balances is the most accurate and beneficial way to disclose differences between regulatory capital and audited consolidated financial statements.

We believe it is also appropriate to include the reconciliation using point-in-time values. The audited consolidated financial statement uses point-in-time values; therefore, also completing the reconciliation using point-in-time values allows for a comparison between GAAP and regulatory capital using point-in-time numbers. Disclosing the reconciliation using both average daily and point-in-time values provides investors and stockholders with the most accurate, complete, and transparent means to understanding differences between regulatory capital and GAAP capital.

In addition, we propose to further clarify System disclosures as follows: Existing § 620.3 requires disclosures by institutions and by employees, officers, directors, and institution director nominees to be ''complete.'' Section 628.62(a) requires disclosures from System banks as outlined in § 628.63. Section 628.62(c) permits a System bank, in certain situations, not to disclose certain information that it would otherwise be required to disclose under § 628.63 and to instead disclose more limited information.

Specifically, § 628.62(c) permits a System bank not to disclose specific proprietary or confidential commercial or financial information that it would otherwise be required to disclose if it concludes that such disclosures would compromise its position, as long as it discloses more general information about the subject matter, together with the fact that, and the reasons why, the specific items of information are not being disclosed.

To clarify that § 620.3 does not require the disclosure of information that banks may properly not disclose under § 628.62(c), we propose to revise § 620.3 to state that unless otherwise determined by FCA, the use of the authorized limited disclosure does not create an incomplete disclosure. We also propose to revise § 620.3 to permit the modification of the required statement that the information provided is true, accurate, and complete to explain that the completeness of the disclosure was determined in consideration of § 628.62(c).

We are also proposing a technical edit to remove and reserve § 628.63(b)(3) because it is no longer applicable.

Question 7: The FCA seeks comment on the appropriateness and usefulness to internal and/or external stakeholders of completing the reconciliation using both point-in-time and average daily balance values?

9. Retirement of Statutory Borrower Stock

Existing § 628.20(b)(1)(xiv)(B) allows System institutions to redeem the minimum statutory borrower stock described in § 628.20(b)(1)(x) without prior FCA approval and without satisfying the minimum holding period for common cooperative equities included in CET1 capital. We propose to add a provision expressly stating that an institution may redeem such statutory borrower stock only provided that, after such redemption, the institution continues to comply with all minimum regulatory capital requirements.

Although the existing rule is silent on whether the institution must maintain compliance with the regulatory capital standards, institutions have been required to do so by the Act and FCA regulations since 1988. Section 4.3A(c)(1)(I) of the Act and § 615.5220(a)(6) condition the retirement of stock on the institution meeting the minimum capital adequacy standards established by FCA. The proposed amendment to § 628.(b)(1)(xiv)(B) would eliminate any possible misinterpretation that an institution could retire the statutory borrower stock if the institution were not meeting its regulatory capital requirements both before and after the retirement.

Although we are not proposing additional changes to the treatment of statutory borrower stock, we provide the following additional clarifications:

- For any statutory borrower stock that exceeds $1,000 or 2 percent of the loan amount, whichever is less, the minimum holding periods apply (7 years for CET1 and 5 years for Tier 2) if an institution plans to include the additional stock in tier 1 or tier 2 capital.
- The minimum statutory borrower stock includible in CET1 is the outstanding balance of the statutory minimum borrower stock. If a loan is for $50,000 or more, the amount includible in CET1 capital without a minimum

holding period is no more than $1,000 until such stock is retired. If a loan is for less than $50,000 at origination, the amount includible in CET1 capital is 2 percent of the originated loan amount until such stock is retired. If a revolving line of credit is originated for $50,000 or more and the amount of borrower stock is retired as the loan pays down, the amount of stock remaining on the calculation date, up to $1,000, is the amount includible in CET1 without a minimum holding period. If a revolving line of credit is originated for less than $50,000 and the amount of borrower stock is retired as the loan pays down, the amount of stock remaining on the calculation date, up to 2 percent of the originated loan amount, is the amount includible in CET1 without a minimum holding period.

C. General Discussion

FCA is using this notice of proposed rulemaking to provide further clarification and guidance to the System on continuously redeemable preferred stock and to respond to a letter received from the Farm Credit Council. We also seek comment on potential changes that may be made to FCA's existing permanent capital regulations.

1. Continuously Redeemable Preferred Stock (H Stock)

Some System associations have issued continuously redeemable perpetual preferred stock (typically called Harvest Stock or H Stock) to their member-borrowers to invest and participate in their cooperative beyond the minimum borrower stock purchase. H Stock is an at-risk investment, issued without a stated maturity and retireable only at the discretion of the institution's board. A feature of the stock is the institution's intent to redeem it upon the request of the holder as long as the institution is in compliance with its regulatory capital requirements. Because of this feature, FCA considers the stock to be continuously redeemable. Some of the institutions also lower the operational hurdles to redemption by delegating the board's authority to retire all member-borrower stock to management provided certain board-approved minimum regulatory capital ratios are maintained. FCA has determined that holders reasonably expect the institution to redeem the stock shortly after they make a request and, therefore, the stock does not meet the requirements of § 628.20(b)(1)(iv), § 628.20(c)(1)(xiv)(A) or § 628.20(d)(1)(xi)(A) for inclusion in tier 1 or tier 2 capital. Even after the stock has been outstanding for 5 years or more, the continued policy of the institutions to redeem this stock upon request and the continued expectations of holders disqualify the stock for inclusion in tier 1 or tier 2 capital.

2. Farm Credit Council Letter

In addition, FCA has received a letter from the Farm Credit Council on behalf of System banks and associations (System Letter) [55] recommending changes to the risk-weighting of investments by System institutions in service corporations and unincorporated business entities (UBEs).

The System Letter requests that a System institution's investment in a service corporation be risk-weighted at 100 percent instead of being deducted from CET1 capital. The stated basis for such treatment is that investments in service corporations are approved by their respective owners that closely control their activities, and the service corporations do not possess lending authorities (*i.e.,* they do not assume exposure to credit risks).

The System Letter also recommended directing System institutions to either risk-weight or deduct their investments in UBEs, depending on the specific nature of the UBE.[56] The letter suggests that institutions with an equity investment in AgDirect, LLP should deduct the investment from regulatory capital.

We have considered the request and have decided not to propose that institutions risk-weight equity investments in service corporations instead of deducting such investments. FCA continues to believe that such capital investments are committed to support risks at the service corporation level and that such capital investments must be available to meet any capital needs of the service corporation.[57]

With respect to the treatment of UBEs, FCA may consider the appropriate regulatory capital treatment of the UBE and apply such treatment on a case-by-case determination, as appropriate.

FCA clarifies that the Farm Credit System Association Captive Insurance Company (Captive Insurance Company) is not a System institution as defined in § 628.2. Accordingly, any System institution with an equity investment in the Captive Insurance Company must risk-weight that equity investment.

3. Permanent Capital

In 1988, Congress added a definition of ''permanent capital'' to the Act and required the FCA to adopt risk-based permanent capital standards for System institutions. The FCA adopted permanent capital regulations in 1988.[58]

The Act defines permanent capital to include current earnings, unallocated and allocated earnings,[59] stock (other than stock retireable on repayment of the holder's loan or at the discretion of the holder, and certain stock issued before October 1988), surplus less allowance for loan losses, and other debt or equity instruments that the FCA determines appropriate to be considered permanent capital. Allocated equities shared by a bank and each affiliated association—that is, equities that a bank has allocated to an affiliated association—appear on the books of both institutions but can be counted in only one institution's permanent capital pursuant to a capital allotment agreement between the two institutions.

By adopting and implementing the Tier 1/Tier 2 Capital Framework, FCA has shifted its focus from permanent capital to total capital (tier 1 and tier 2). Because the Act defines permanent capital, FCA must require reporting and monitoring of permanent capital. Moreover, FCA has limited authority to change the components of permanent capital. However, the FCA has full authority to implement appropriate deductions to permanent capital in the numerator and set the risk-weights used in risk-adjusted assets in the denominator of the permanent capital ratio. FCA seeks to reduce the burden associated with permanent capital, and we seek comment on the best way to do so consistent with statutory mandates. We note that H Stock, in its current form, is included in permanent capital and FCA does not seek to exclude H Stock from permanent capital.

Question 8: What, if any, changes to the permanent capital regulations (§§ 615.5201, 615.5206, 615.5207, and 615.5208) should be made to increase their clarity and understanding?

Question 9: Is calculating permanent capital burdensome for System institutions? If so, are there any changes FCA could make to this calculation that would reduce this burden, considering that the definition of permanent capital

[55] Letter dated November 22, 2016, from Charles Dana, General Counsel, Farm Credit Council to Gary K. Van Meter, Director, Office of Regulatory Policy. The Farm Credit Council is a trade association representing the interests of System banks and associations. This letter was received after the final Capital Rule had been adopted by the FCA Board and communicates a request to change certain provisions of the final Capital Rule, as discussed in this section.

[56] Under the existing rules, equity investments in UBEs are generally included in risk-weighted assets in accordance with § 628.52.

[57] *See* 63 FR 39222 (July 22, 1998).

[58] *See* 53 FR 39229 (October 6, 1988).

[59] In this preamble, ''unallocated and allocated earnings'' would be equivalent to ''unallocated retained earnings and allocated equities.'' Additionally, ''surplus'' would be ''unallocated retained earnings.''

in the Act precludes us from changing the components of permanent capital?

Question 10: Should FCA more closely align the permanent capital calculation with the total capital (tier 1 and tier 2) calculations? If so, how could FCA accomplish this, considering that for permanent capital, the Act specifies deductions related to bank and association allotment agreements?

III. Abbreviations

BCBS Basel Committee on Banking Supervision
CFR Code of Federal Regulations
CFTC Commodity Futures Trading Commission
EMNA Eligible Master Netting Agreement
FCA Farm Credit Administration
FDIC Federal Deposit Insurance Corporation
FDI Act Federal Deposit Insurance Corporation Improvement Act of 1991
FFIEC Federal Financial Institutions Examination Council
FR Federal Register
GAAP Generally Accepted Accounting Principles (U.S.)
GSE Government-Sponsored Enterprise
GSIB Global Systemically Important Bank
OCC Office of the Comptroller of the Currency
QFC Qualified Financial Contract
QMNA Qualified Master Netting Agreement
SEC Securities and Exchange Commission
SFA Supervisory Formula Approach
SRWA Simple Risk-Weight Approach
SSFA Simplified Supervisory Formula Approach
UBE Unincorporated Business Entity
URE Unallocated Retained Earnings
UREE Unallocated Retained Earnings Equivalents
U.S.C. United States Code

IV. Regulatory Flexibility Act

Pursuant to section 605(b) of the Regulatory Flexibility Act (5 U.S.C. 601 *et seq.*), FCA hereby certifies that this proposed rule will not have a significant economic impact on a substantial number of small entities. Each of the banks in the Farm Credit System, considered together with its affiliated associations, has assets and annual income in excess of the amounts that would qualify them as small entities. Therefore, Farm Credit System institutions are not ''small entities'' as defined in the Regulatory Flexibility Act.

Lists of Subjects

12 CFR Part 614

Agriculture, Banks, Banking, Foreign trade, Reporting and recordkeeping requirements, Rural areas.

12 CFR Part 615

Accounting, Agriculture, Banks, Banking, Government securities, Investments, Rural areas.

12 CFR Part 620

Accounting, Agriculture, Banks, Banking, Reporting and recordkeeping requirements, Rural areas.

12 CFR Part 628

Accounting, Agriculture, Banks, Banking, Capital, Government securities, Investments, Rural areas.

For the reasons stated in the preamble, the Farm Credit Administration proposes to amend parts 614, 615, 620 and 628 of chapter VI, title 12 of the Code of Federal Regulations as follows:

PART 614—LOAN POLICIES AND OPERATIONS

■ 1. The authority citation for part 614 is revised to read as follows:

Authority: Secs. 1.3, 1.5, 1.6, 1.7, 1.9, 1.10, 1.11, 2.0, 2.2, 2.3, 2.4, 2.10, 2.12, 2.13, 2.15, 3.0, 3.1, 3.3, 3.7, 3.8, 3.10, 3.20, 3.28, 4.12, 4.12A, 4.13B, 4.14, 4.14A, 4.14D, 4.14E, 4.18, 4.18A, 4.19, 4.25, 4.26, 4.27, 4.28, 4.36, 4.37, 5.9, 5.10, 5.17, 7.0, 7.2, 7.6, 7.8, 7.12, 7.13, 8.0, 8.5 of the Farm Credit Act (12 U.S.C. 2011, 2013, 2014, 2015, 2017, 2018, 2019, 2071, 2073, 2074, 2075, 2091, 2093, 2094, 2097, 2121, 2122, 2124, 2128, 2129, 2131, 2141, 2149, 2183, 2184, 2201, 2202, 2202a, 2202d, 2202e, 2206, 2206a, 2207, 2211, 2212, 2213, 2214, 2219a, 2219b, 2243, 2244, 2252, 2279a, 2279a–2, 2279b, 2279c–1, 2279f, 2279f–1, 2279aa, 2279aa–5); sec. 413 of Pub. L. 100–233, 101 Stat. 1568, 1639, as amended by section 405 of Pub. L. 100–399, 102 Stat. 1000 (12 U.S.C. 2121 note); 42 U.S.C. 4012a, 4104a, 4104b, 4106, and 4128.

■ 2. Amend § 614.4351 by:

■ a. Revising paragraph (a);

■ b. Removing and reserving paragraph (a)(1); and

■ c. Revising paragraph (a)(2).

The revisions read as follows:

§ 614.4351 Computation of lending and leasing limit base.

(a) *Lending and leasing limit base.* An institution's lending and leasing limit base is composed of the total capital (Tier 1 and Tier 2) of the institution, as defined in § 628.2 of this chapter, with adjustments applicable to the institution provided for in § 628.22 of this chapter, and with the following further adjustments:

(1) [Reserved]

(2) Eligible third-party capital that is required to be excluded from total capital under § 628.23 of this chapter may be included in the lending limit base.

* * * * *

PART 615—FUNDING AND FISCAL AFFAIRS, LOAN POLICIES AND OPERATIONS, AND FUNDING OPERATIONS

■ 3. The authority citation for part 615 is revised to read as follows:

Authority: Secs. 1.5, 1.7, 1.10, 1.11, 1.12, 2.2, 2.3, 2.4, 2.5, 2.12, 3.1, 3.7, 3.11, 3.25, 4.3, 4.3A, 4.9, 4.14B, 4.25, 5.9, 5.17, 8.0, 8.3, 8.4, 8.6, 8.8, 8.10, 8.12 of the Farm Credit Act (12 U.S.C. 2013, 2015, 2018, 2019, 2020, 2073, 2074, 2075, 2076, 2093, 2122, 2128, 2132, 2146, 2154, 2154a, 2160, 2202b, 2211, 2243, 2252, 2279aa, 2279aa–3, 2279aa–4, 2279aa–6, 2279aa–8, 2279aa–10, 2279aa–12); sec. 301(a), Pub. L. 100–233, 101 Stat. 1568, 1608 (12 U.S.C. 2154 note); sec. 939A, Pub. L. 111–203, 124 Stat. 1326, 1887 (15 U.S.C. 78o–7 note).

■ 4. Amend § 615.5200 by replacing the existing language with the following language:

§ 615.5200 Capital planning.

(a) The Board of Directors of each System institution shall determine the amount of regulatory capital needed to assure the System institution's continued financial viability and to provide for growth necessary to meet the needs of its borrowers. The minimum capital standards specified in this part and part 628 of this chapter are not meant to be adopted as the optimal capital level in the System institution's capital adequacy plan. Rather, the standards are intended to serve as minimum levels of capital that each System institution must maintain to protect against the credit and other general risks inherent in its operations.

(b) Each Board of Directors shall establish, adopt, and maintain a formal written capital adequacy plan as a part of the financial plan required by § 618.8440 of this chapter. The plan shall include the capital targets that are necessary to achieve the System institution's capital adequacy goals as well as the minimum permanent capital, common equity tier 1 (CET1) capital, tier 1 capital, total capital, and tier 1 leverage ratios (including the unallocated retained earnings (URE) and URE equivalents minimum) standards. The plan shall expressly acknowledge the continuing and binding effect of all board resolutions adopted in accordance with §§ 628.20(b)(1)(xiv), (c)(1)(xiv), (d)(1)(xi), and 628.21. The plan shall address any projected dividend payments, patronage payments, equity retirements, or other action that may decrease the System institution's capital or the components thereof for which minimum amounts are required by this part and part 628 of this chapter. The plan shall set forth the circumstances and minimum timeframes in which

equities may be redeemed or revolved consistent with the System institution's applicable bylaws or board of directors' resolutions.

(c) In addition to factors that must be considered in meeting the minimum standards, the board of directors shall also consider at least the following factors in developing the capital adequacy plan:

(1) Capability of management and the board of directors (the assessment of which may be a part of the assessments required in paragraphs (b)(2)(ii) and (b)(7)(i) of § 618.8440 of this chapter);

(2) Quality of operating policies, procedures, and internal controls;

(3) Quality and quantity of earnings;

(4) Asset quality and the adequacy of the allowance for losses to absorb potential loss within the loan and lease portfolios;

(5) Sufficiency of liquid funds;

(6) Needs of a System institution's customer base; and

(7) Any other risk-oriented activities, such as funding and interest rate risks, potential obligations under joint and several liability, contingent and off-balance-sheet liabilities or other conditions warranting additional capital.

■ 5. Amend § 615.5201 by revising the definition of ''System institution'' to read as follows:

§ 615.5201 Definitions.

* * * * *

System institution means a System bank, an association of the Farm Credit System, and their successors, and any other institution chartered by the FCA that the FCA determines should be considered a System institution for the purposes of this subpart.

■ 6. Amend § 615.5220 by revising paragraph (a)(6) to read as follows:

§ 615.5220 Capitalization bylaws.

(a) * * *

(6) The manner in which equities will be retired, including a provision stating that equities other than those protected under section 4.9A of the Act are retireable at the sole discretion of the board, provided minimum capital adequacy standards established by the Farm Credit Administration, and the capital requirements established by the board of directors of the System institution, are met;

* * * * *

PART 620—DISCLOSURE TO SHAREHOLDERS

■ 7. The authority citation for part 620 continues to read as follows:

Authority: Secs. 4.3, 4.3A, 4.19, 5.9, 5.17, 5.19 of the Farm Credit Act (12 U.S.C. 2154, 2154a, 2207, 2243, 2252, 2254); sec. 424 of Pub. L. 100–233, 101 Stat. 1568, 1656; sec. 514 of Pub. L. 102–552, 106 Stat. 4102.

■ 8. Amend § 620.3 byadding in paragraphs (a) and (c)(3) a new last sentence to read as follows.

§ 620.3 Accuracy of reports and assessment of internal control over financial reporting.

(a) * * * Unless otherwise determined by FCA, the appropriate use of the limited disclosure authorized by § 628.62(c) does not create an incomplete disclosure.

* * * * *

(c) * * *

(3) * * * If the report contains the limited disclosure authorized by § 628.62(c), the statement may be modified to explain that the completeness of the report was determined in consideration of § 628.62(c).

* * * * *

■ 9. Amend § 620.5 by:

■ a. Adding paragraph(f)(3)(v);

■ b. Revising (f)(4).

The addition and revision read as follows:

§ 620.5 Contents of the annual report to shareholders.

* * * * *

(f) * * *

(3) * * *

(v) Tier 1 leverage ratio.

(4) The following ratios shall be disclosed in comparative columnar form in each annual report through fiscal year end 2021, only as long as these ratios are part of the previous 5 fiscal years of financial data required under § 620.5(2) and (3):

(i) Core surplus ratio.

(ii) Total surplus ratio.

(iii) For banks only, net collateral ratio.

* * * * *

PART 628—CAPITAL ADEQUACY OF SYSTEM INSTITUTIONS

■ 10. The authority citation for part 628 is revised to read as follows:

Authority: Secs. 1.5, 1.7, 1.10, 1.11, 1.12, 2.2, 2.3, 2.4, 2.5, 2.12, 3.1, 3.7, 3.11, 3.25, 4.3, 4.3A, 4.9, 4.14B, 4.25, 5.9, 5.17, 8.0, 8.3, 8.4, 8.6, 8.8, 8.10, 8.12 of the Farm Credit Act (12 U.S.C. 2013, 2015, 2018, 2019, 2020, 2073, 2074, 2075, 2076, 2093, 2122, 2128, 2132, 2146, 2154, 2154a, 2160, 2202b, 2211, 2243, 2252, 2279aa, 2279aa–3, 2279aa–4, 2279aa–6, 2279aa–8, 2279aa–10, 2279aa–12); sec. 301(a), Pub. L. 100–233, 101 Stat. 1568, 1608 (12 U.S.C. 2154 note); sec. 939A, Pub. L. 111–203, 124 Stat. 1326, 1887 (15 U.S.C. 78o–7 note).

■ 11. Amend § 628.2 by:

■ a. Revising the definition of ''Collateral agreement'';

■ b. Adding in alphabetical order a definition for ''Common cooperative equity issuance date'';

■ c. Revising the definition of ''Eligible margin loan'';

■ d. Revising the definition of ''Qualifying master netting agreement'';

■ e. Revising the definition of ''Repo-style transaction'';

■ f. Revising the definition of ''System institution''.

The revisions and addition read as follows:

§ 628.2 Definitions

* * * * *

Collateral agreement means a legal contract that specifies the time when, and circumstances under which, a counterparty is required to pledge collateral to a System institution for a single financial contract or for all financial contracts in a netting set and confers upon the System institution a perfected, first-priority security interest (notwithstanding the prior security interest of any custodial agent), or the legal equivalent thereof, in the collateral posted by the counterparty under the agreement. This security interest must provide the System institution with a right to close-out the financial positions and liquidate the collateral upon an event of default of, or failure to perform by, the counterparty under the collateral agreement. A contract would not satisfy this requirement if the System institution's exercise of rights under the agreement may be stayed or avoided:

(1) Under applicable law in the relevant jurisdictions, other than:

(i) In receivership, conservatorship, or resolution under the Federal Deposit Insurance Act, Title II of the Dodd-Frank Act, or under any similar insolvency law applicable to GSEs, or laws of foreign jurisdictions that are substantially similar to the U.S. laws referenced in this paragraph (1)(i) in order to facilitate the orderly resolution of the defaulting counterparty;

(ii) Where the agreement is subject by its terms to, or incorporates, any of the laws referenced in paragraph (1)(i) of this definition; or

(2) Other than to the extent necessary for the counterparty to comply with the requirements of part 47, Subpart I of part 252 or part 382 of Title 12, as applicable.

* * * * *

Common cooperative equity issuance date means the date in which the holding period for purchased stock (excluding statutory minimum borrower stock and third-party stock) and allocated equities start:

(1)For allocated equities, the quarter-ending in which:

(i) The System institution's Board of Directors has passed a resolution declaring a patronage refund; and

(ii) The System institution has completed the applicable accounting treatment by segregating the new allocated equities from its unallocated retained earnings.

(iii) For purchased stock (excluding statutory minimum borrower stock and third-party stock), the quarter-ending in which the stock is acquired by the holder and recognized on the institution's balance sheet.

* * * * *

Eligible margin loan means:

(1) An extension of credit where:

(i) The extension of credit is collateralized exclusively by liquid and readily marketable debt or equity securities, or gold;

(ii) The collateral is marked-to-fair value daily, and the transaction is subject to daily margin maintenance requirements; and

(iii) The extension of credit is conducted under an agreement that provides the System institution the right to accelerate and terminate the extension of credit and to liquidate or set-off collateral promptly upon an event of default, including upon an event of receivership, insolvency, liquidation, conservatorship, or similar proceeding, of the counterparty, provided that, in any such case:

(A) Any exercise of rights under the agreement will not be stayed or avoided under applicable law in the relevant jurisdictions, other than:

(*1*) In receivership, conservatorship, or resolution under the Federal Deposit Insurance Act, Title II of the Dodd-Frank Act, or under any similar insolvency law applicable to GSEs,[60] or laws of foreign jurisdictions that are substantially similar to the U.S. laws referenced in this paragraph (1)(iii)(A)(*1*) in order to facilitate the orderly resolution of the defaulting counterparty; or

(*2*) Where the agreement is subject by its terms to, or incorporates, any of the laws referenced in paragraph (1)(iii)(A)*(1)* of this definition; and

(B) The agreement may limit the right to accelerate, terminate, and close-out on a net basis all transactions under the agreement and to liquidate or set-off collateral promptly upon an event of default of the counterparty to the extent necessary for the counterparty to comply with the requirements of part 47, subpart I of part 252 or part 382 of Title 12, as applicable.

(2) In order to recognize an exposure as an eligible margin loan for purposes of this subpart, a System institution must comply with the requirements of § 628.3(b) with respect to that exposure.

* * * * *

Qualifying master netting agreement means a written, legally enforceable agreement provided that:

(1) The agreement creates a single legal obligation for all individual transactions covered by the agreement upon an event of default following any stay permitted by paragraph (2) of this definition, including upon an event of receivership, conservatorship, insolvency, liquidation, or similar proceeding, of the counterparty;

(2) The agreement provides the System institution the right to accelerate, terminate, and close-out on a net basis all transactions under the agreement and to liquidate or set-off collateral promptly upon an event of default, including upon an event of receivership, conservatorship, insolvency, liquidation, or similar proceeding, of the counterparty, provided that, in any such case:

(i) Any exercise of rights under the agreement will not be stayed or avoided under applicable law in the relevant jurisdictions, other than:

(A) In receivership, conservatorship, or resolution under the Federal Deposit Insurance Act, Title II of the Dodd-Frank Act, or under any similar insolvency law applicable to GSEs, or laws of foreign jurisdictions that are substantially similar to the U.S. laws referenced in this paragraph (2)(i)(A) in order to facilitate the orderly resolution of the defaulting counterparty; or

(B) Where the agreement is subject by its terms to, or incorporates, any of the laws referenced in paragraph (2)(i)(A) of this definition; and

(ii) The agreement may limit the right to accelerate, terminate, and close-out on a net basis all transactions under the agreement and to liquidate or set-off collateral promptly upon an event of default of the counterparty to the extent necessary for the counterparty to comply with the requirements of part 47, Subpart I of part 252 or part 382 of Title 12, as applicable;

(3) The agreement does not contain a walkaway clause (that is, a provision that permits a non-defaulting counterparty to make a lower payment than it otherwise would make under the agreement, or no payment at all, to a defaulter or the estate of a defaulter, even if the defaulter or the estate of the defaulter is a net creditor under the agreement); and

(4) In order to recognize an agreement as a qualifying master netting agreement for purposes of this subpart, a System institution must comply with the requirements of § 628.3(d) with respect to that agreement.

* * * * *

Repo-style transaction means a repurchase or reverse repurchase transaction, or a securities borrowing or securities lending transaction, including a transaction in which the System institution acts as agent for a customer and indemnifies the customer against loss, provided that:

(1) The transaction is based solely on liquid and readily marketable securities, cash, or gold;

(2) The transaction is marked-to-fair value daily and subject to daily margin maintenance requirements;

(3)(i) The transaction is a ''securities contract'' or ''repurchase agreement'' under section 555 or 559, respectively, of the Bankruptcy Code (11 U.S.C. 555 or 559), a qualified financial contract under section 11(e)(8) of the Federal Deposit Insurance Act, or a netting contract between or among financial institutions under sections 401–407 of the Federal Deposit Insurance Corporation Improvement Act or the Federal Reserve's Regulation EE (12 CFR part 231); or

(ii) If the transaction does not meet the criteria set forth in paragraph (3)(i) of this definition, then either:

(A) The transaction is executed under an agreement that provides the System institution the right to accelerate, terminate, and close-out the transaction on a net basis and to liquidate or set-off collateral promptly upon an event of default, including upon an event of receivership, insolvency, liquidation, or similar proceeding, of the counterparty, provided that, in any such case:

(*1*) Any exercise of rights under the agreement will not be stayed or avoided under applicable law in the relevant jurisdictions, other than:

(*i*) In receivership, conservatorship, or resolution under the Federal Deposit Insurance Act, Title II of the Dodd-Frank Act, or under any similar insolvency law applicable to GSEs, or laws of foreign jurisdictions that are substantially similar to the U.S. laws referenced in this paragraph (3)(ii)(A)(*1*)(*i*) in order to facilitate the orderly resolution of the defaulting counterparty;

(ii) Where the agreement is subject by its terms to, or incorporates, any of the

[60] This requirement is met where all transactions under the agreement are (i) executed under U.S. law and (ii) constitute ''securities contracts'' under section 555 of the Bankruptcy Code (11 U.S.C. 555), qualified financial contracts under section 11(e)(8) of the Federal Deposit Insurance Act, or netting contracts between or among financial institutions under sections 401–407 of the Federal Deposit Insurance Corporation Improvement Act or the Federal Reserve Board's Regulation EE (12 CFR part 231).

laws referenced in paragraph (3)(ii)(A)(*1*)(*i*) of this definition; and

(2) The agreement may limit the right to accelerate, terminate, and close-out on a net basis all transactions under the agreement and to liquidate or set-off collateral promptly upon an event of default of the counterparty to the extent necessary for the counterparty to comply with the requirements of part 47, Subpart I of part 252 or part 382 of Title 12, as applicable; or

(B) The transaction is:

(1) Either overnight or unconditionally cancelable at any time by the System institution; and

(2) Executed under an agreement that provides the System institution the right to accelerate, terminate, and close-out the transaction on a net basis and to liquidate or set-off collateral promptly upon an event of counterparty default; and

(4) In order to recognize an exposure as a repo-style transaction for purposes of this subpart, a System institution must comply with the requirements of § 628.3(e) of this part with respect to that exposure.

* * * * *

System institution means a System bank, an association of the Farm Credit System, and their successors, and any other institution chartered by the FCA that the FCA determines should be considered a System institution for the purposes of this subpart.

* * * * *

■ 12. Amend § 628.10 by revising paragraph (c)(4) to read as follows:

§ 628.10 Minimum capital requirements.

* * * * *

(c) * * *

(4) *Tier 1 leverage ratio.* (i) A System institution's leverage ratio is the ratio of the institution's tier 1 capital to the institution's average total consolidated assets as reported on the institution's Call Report minus amounts deducted from tier 1 capital under §§ 628.22(a) and (c) and 628.23.

(ii) To calculate the measure of URE and URE equivalents described in § 628.10(b)(4), a System institution must deduct from URE and URE equivalents an amount equal to all the deductions required under § 628.22(a) and (c), and must use the denominator of the tier 1 leverage ratio.

* * * * *

■ 13. Amend § 628.20 by revising paragraphs (b)(1)(i) through (ii), (xiv), (c)(1)(xiv), (d)(1)(i), (1)(xi), and (f)(5)(ii).

The revisions read as follows:

§ 628.20 Capital components and eligibility criteria for tier 1 and tier 2 capital instruments.

* * * * *

(b) * * *

(1) * * *

(i) The instrument is paid-in, issued directly by the System institution, and represents the most subordinated claim in a receivership, insolvency, liquidation, or similar proceeding of the System institution;

(ii) The holder of the instrument is entitled to a claim on the residual assets of the System institution after all senior claims have been satisfied in a receivership, insolvency, liquidation, or similar proceeding;

* * * * *

(xiv) The System institution's capitalization bylaws, or a resolution adopted by its board of directors under § 628.21, provides that the institution:

(A) Establishes a minimum redemption or revolvement period of 7 years for equities included in CET1; and

(B) Shall not redeem, revolve, cancel, or remove any equities included in CET1 without prior approval of the FCA under § 628.20(f), except that the minimum statutory borrower stock described in paragraph (b)(1)(x) of this section may be redeemed without a minimum period outstanding after issuance and without the prior approval of the FCA, as long as after the redemption, the System institution continues to comply with all minimum regulatory capital requirements.

* * * * *

(c) * * *

(1) * * *

(xiv) The System institution's capitalization bylaws, or a resolution adopted by its board of directors under § 628.21, provides that the institution:

(A) Establishes a minimum redemption or no-call period of 5 years for equities included in additional tier 1; and

(B) Shall not redeem, revolve, cancel, or remove any equities included in additional tier 1 capital without prior approval of the FCA under § 628.20(f).

* * * * *

(d) * * *

(1) * * *

(i) The instrument is issued and paid-in;

* * * * *

(xi) The System institution's capitalization bylaws, or a resolution adopted by its board of directors under § 628.21, provides that the institution:

(A) Establishes a minimum call, redemption or revolvement period of 5 years for equities included in tier 2 capital; and

(B) Shall not call, redeem, revolve, cancel, or remove any equities included in tier 2 capital without prior approval of the FCA under § 628.20(f).

* * * * *

(f) * * *

(5) * * *

(ii) After such cash payments have been declared and defined by resolution of the board, the dollar amount of the System institution's CET1 capital at quarter-end equals or exceeds the dollar amount of CET1 capital on the same quarter-end in the previous calendar year; and

* * * * *

■ 14. Add new § 628.21 to read as follows:

§ 628.21 Capital bylaw or board resolution to include equities in tier 1 and tier 2 capital.

In order to include otherwise eligible purchased and allocated equities in tier 1 capital and tier 2 capital, the System institution must adopt a capitalization bylaw, or its board of directors must adopt a binding resolution, which resolution must be acknowledged by the board on an annual basis in the capital adequacy plan described in § 615.5200, in which the institution undertakes the following, as applicable:

(a) The institution shall obtain prior FCA approval under § 628.20(f) before:

(1) Redeeming or revolving the equities included in common equity tier 1 (CET1) capital;

(2) Redeeming or calling the equities included in additional tier 1 capital; and

(3) Redeeming, revolving, or calling instruments included in tier 2 capital other than limited life preferred stock or subordinated debt on the maturity date.

(b) The equities shall have a minimum redemption or revolvement period as follows:

(1) 7 years for equities included in CET1 capital, except that the minimum statutory borrower stock described in § 628.20(b)(1)(x) may be redeemed without a minimum holding period and that equities designated as unallocated retained earnings (URE) equivalents cannot be revolved without submitting a written request to the FCA for prior approval;

(2) A minimum no-call, repurchase, or redemption period of 5 years for additional tier 1 capital; and

(3) A minimum no-call, repurchase, redemption, or revolvement period of 5 years for tier 2 capital.

(c) The institution shall submit to FCA a written request for prior approval before:

(1) Redesignating URE equivalents as equities that the institution may

exercise its discretion to redeem other than upon dissolution or liquidation;

(2) Removing equities or other instruments from CET1, additional tier 1, or tier 2 capital other than through repurchase, cancellation, redemption or revolvement; and

(3) Redesignating equities included in one component of regulatory capital (CET1 capital, additional tier 1 capital, or tier 2 capital) for inclusion in another component of regulatory capital.

(d) The institution shall not exercise its discretion to revolve URE equivalents except upon dissolution or liquidation and shall not offset URE equivalents against a loan in default except as required under final order of a court of competent jurisdiction or if required under § 615.5290 in connection with a restructuring under part 617 of this chapter.

(e) The minimum redemption and revolvement period (holding period) for purchased and allocated equities starts on the common cooperative equity issuance date, as defined in § 628.2.

■ 15. Amend § 628.22 by revising paragraphs (a)(6) and (b) to read as follows:

§ 628.22 Regulatory capital adjustments and deductions.

* * * * *

(a) * * *

(6) The System institution's allocated equity investment in another System institution or service corporation; and

* * * * *

(b) *Regulatory adjustments to common equity tier 1 capital.* (1) Any accrual of a patronage or dividend payable or receivable recognized in the financial statements prior to a related board declaration resolution must be reversed to or from unallocated retained earnings for purposes of calculating common equity tier 1 capital.

* * * * *

■ 16. Amend § 628.32 by revising paragraph (l)(1) to read as follows:

§ 628.32 General risk weights.

* * * * *

(l) *Other assets.* (1) A System institution must assign a 0-percent risk weight to cash owned and held in all offices of the System institution or in transit; to gold bullion held in the System institution's own vaults or held in a depository institution's vaults on an allocated basis, to the extent the gold bullion assets are offset by gold bullion liabilities; and to exposures that arise from the settlement of cash transactions (such as equities, fixed income, spot foreign exchange (FX) and spot commodities) with a central counterparty where there is no assumption of ongoing counterparty credit risk by the central counterparty after settlement of the trade.

* * * * *

■ 17. Amend § 628.43 by revising paragraphs (d)(1) and(2) to read as follows:

§ 628.43 Simplified supervisory formula approach (SSFA) and the gross-up approach.

* * * * *

(d) * * *

(1) The System institution must define the following parameters:

$K_A = (1 - W) \times K_G + (0.5 \times W)$

(2) Then the System institution must calculate K_{SSFA} according to the following equation:

$$K_{SSFA} = \frac{e^{au} - e^{al}}{a(u-l)}$$

Where:

$$a = -\frac{1}{p \times K_A},$$

$$u = D - K_A,$$

$$l = \max(A - K_A, 0), \text{ and}$$

$$e = 2.71828, \text{ the base of the natural logarithm}$$

* * * * *

■ 18. Amend § 628.52 by revising paragraph (c)(2)(ii) to read as follows:

§ 628.52 Simple risk-weight approach (SRWA).

* * * * *

(c) * * *

(2) * * *

(ii) Under the variability-reduction method of measuring effectiveness:

$$E = 1 - \frac{\sum_{t=1}^{T}(X_t - X_{t-1})^2}{\sum_{t=1}^{T}(A_t - A_{t-1})^2}$$

Where:

$X_t = A_t - B_t$;

A_t = the value at time t of one exposure in a hedge pair; and

Bt = the value at time t of the other exposure in a hedge pair.

* * * * *

■ 19. Amend § 628.63 by:

■ a. Removing and reserving paragraph (b)(3);

■ b. Revising paragraph (b)(4).

The revision reads as follows:

§ 628.63 Disclosures.

* * * * *

(b) * * *

(3) [Reserved]

(4) A reconciliation of regulatory capital elements using both month-end and average daily balances as they relate to its balance sheet in any applicable audited consolidated financial statements.

* * * * *

Dated: July 21, 2020.

Dale Aultman,

Secretary, Farm Credit Administration Board.

[FR Doc. 2020–16052 Filed 9–9–20; 8:45 am]

BILLING CODE 6705–01–P

DEPARTMENT OF COMMERCE

International Trade Administration

19 CFR Part 351

[Docket No. 200904–0234]

RIN 0625–AB10

Regulations To Improve Administration and Enforcement of Antidumping and Countervailing Duty Laws; Extension of Comment Period To Allow Submissions of Rebuttal Comments and Requirement of Electronic Submission of Comments and Rebuttal Comments

AGENCY: Enforcement and Compliance, International Trade Administration, Department of Commerce.

ACTION: Proposed rule; extension of comment period for rebuttal comments and requirement of electronic submissions.

SUMMARY: The Department of Commerce (Commerce) is extending the comment period for the proposed rule, entitled ''Regulations to Improve Administration and Enforcement of Antidumping and Countervailing Duty Laws,'' which published in the **Federal Register** on August 13, 2020, solely to allow parties the opportunity to submit rebuttal comments. During the extension period, parties may only submit rebuttals to comments that were submitted by other parties as of September 14, 2020. Additionally, Commerce will only be able to accept electronically submitted comments following the publication of this document in the **Federal Register**.

DATES: To be assured of consideration, written comments must be received no later than September 14, 2020, and written rebuttal comments must be received no later than September 28, 2020. The September 14, 2020 deadline for comments on the proposed rule is unchanged. ADDRESSES: Following publication of this document in the **Federal Register**, submit comments and rebuttal comments only through the Federal eRulemaking Portal at *http://www.Regulations.gov,* Docket No. ITA–2020–0001. Due to the COVID–19 situation, the Department is not able to accept comments submitted by mail or hand-delivery at this time.

All rebuttal comments submitted during the additional 14-day period permitted by this document will be a matter of public record and will generally be available on the Federal eRulemaking Portal at *http://www.Regulations.gov.* Commerce will not accept response comments accompanied by a request that part or all of the material be treated confidentially because of its business proprietary nature or for any other reason. Therefore, do not submit confidential business information or otherwise sensitive or protected information.

Any questions concerning the process for submitting comments should be submitted to Enforcement & Compliance (E&C) Communications office at (202) 482–0063 or *ECCOMMS@trade.gov.*

FOR FURTHER INFORMATION CONTACT: Scott McBride at (202) 482–6292; David Mason at (202) 482–5051; or Jessica Link at (202) 482–1411.

SUPPLEMENTARY INFORMATION: On August 13, 2020 (85 FR 49472), Commerce published a proposed rule entitled ''Regulations to Improve Administration and Enforcement of Antidumping and Countervailing Duty Laws'' in the **Federal Register** with a comment period ending no later than September 14, 2020. Commerce has subsequently received requests for two extensions of time—one for comments on the proposed rule and an additional extension for parties to submit comments in response to comments made by other parties on the proposed rule (available on the Federal eRulemaking Portal at *http://www.Regulations.gov,* Docket No. ITA–2020–0001).

Commerce has determined that no extension of time is warranted for comments on the proposed rule because the existing comment period allows adequate time for interested persons to fully consider the proposal and submit comments. Thus, Commerce will not grant an extension for the submission of such comments.

However, Commerce agrees that the public and the agency would benefit if parties have the opportunity to submit rebuttal comments in response to comments filed by other parties on the proposed rule. Accordingly, Commerce is granting an extension of time solely for the purpose of allowing the public to file such rebuttal comments. Commerce will consider all rebuttal comments submitted by September 28, 2020. Submissions received after September 14, 2020 must respond to comments which were filed on or before that date and should not include original arguments regarding the proposed rule. Otherwise, Commerce will disregard submissions during that period of time in drafting its final rule which do not respond to comments submitted by other parties.

Thus, comments on the proposed rule are due on September 14, 2020. Commerce will not modify this deadline. However, as stated above, Commerce has determined to allow parties to submit rebuttals to comments on the proposed rule that were submitted on or before September 14, 2020. Such rebuttal comments will be due September 28, 2020. Commerce will not consider comments on the proposed rule submitted after September 14, 2020, which are not responsive to comments submitted by other parties on or before September 14, 2020.

Furthermore, although the proposed rule indicated that comments might also be submitted by mail or hand delivery/courier, due to the COVID–19 situation Commerce will not be able to receive such submissions. Accordingly, from the date of publication of this document in the **Federal Register**, all comments and rebuttal comments must be submitted through the Federal eRulemaking Portal at *http://www.Regulations.gov.*

Dated: September 4, 2020.

Jeffrey I. Kessler,

Assistant Secretary for Enforcement and Compliance.

[FR Doc. 2020–20037 Filed 9–9–20; 8:45 am]

BILLING CODE 3510–DS–P

DEPARTMENT OF HEALTH AND HUMAN SERVICES

Food and Drug Administration

21 CFR Part 300

[Docket No. FDA–2019–N–5553]

RIN 0910–AI36

Annual Summary Reporting Requirements Under the Right To Try Act; Correction

AGENCY: Food and Drug Administration, HHS.

ACTION: Proposed rule; correction.

SUMMARY: The Food and Drug Administration (FDA, the Agency, or we) is correcting a proposed rule that published in the **Federal Register** of July 24, 2020. That proposed rule proposes to establish requirements for the deadline and contents of submission in an annual summary. We are placing a corrected copy of the proposed rule in the docket.

FOR FURTHER INFORMATION CONTACT: Kathleen Davies, Food and Drug Administration, 10903 New Hampshire Ave., Bldg. 32, Rm. 3121, Silver Spring, MD 20993, 301–796–2205, *kathleen.davies@fda.hhs.gov.*

SUPPLEMENTARY INFORMATION: In the **Federal Register** of July 24, 2020, (85 FR 44803), FDA published the proposed rule ''Annual Summary Reporting Requirements Under the Right to Try Act'' with several errors.

In the **Federal Register** of July 24, 2020, FR Doc. 2020–16016, the following corrections are made:

On page 44804, in the third column, in section ''*D. Costs and Benefits*'' the first paragraph, the fourth and fifth sentences are corrected as follows: ''The total estimated present value of this rule's costs is $39,991 at a seven percent discount rate and $49,345 at a three percent discount rate (in 2018 dollars). The annualized cost of this rule over 10 years is $5,694 at a seven percent discount rate and $5,785 at a three percent discount rate.'' On page 44808, in table 1, in column 2 (''Primary estimate'') rows 4 and 5 (''Costs'' category) are corrected as follows: ''$5,694'' and $5,785'', respectively, and the ''7'' in column 4 (''High estimate'') is removed. On pages 44808 and 44809, in column 6 (''Discount Rate (10%)'') is corrected to read as follows:

TABLE 1—SUMMARY OF BENEFITS AND COSTS IN 2018 DOLLARS OVER A 10-YEAR TIME HORIZON

Category	Primary estimate	Low estimate	High estimate	Units			Notes
				Year dollars	Discount rate (%)	Period covered	
Benefits:							
Annualized Monetized $/year.	.....	.....	.....	2018 2018	7 3	10 10	
Annualized Quantified	.....	.....	.....	.....	7 3		
Qualitative	.....	.....	.....	.....	.....	.....	Disclosure of serious adverse events and outcomes related to investigational new drug treatments.
Costs:							
Annualized Monetized $/year.	$5,694 $5,785	.....	.....	2018 2018	7 3	10 10	
Annualized Quantified	.....	.....	.....	.....	7 3		
Qualitative							
Transfers:							
Federal Annualized Monetized $/year.	.....	.....	.....	.....	7 3		
From/To	From:			To:			
Other Annualized Monetized $/year.	.....	.....	.....	.....	7 3		
From/To	From:			To:			
Effects:	State, Local or Tribal Government: Small Business: Wages: Growth:						

Dated: August 20, 2020.

Lowell J. Schiller,

Principal Associate Commissioner for Policy.

[FR Doc. 2020–18777 Filed 9–9–20; 8:45 am]

BILLING CODE 4164–01–P

DEPARTMENT OF EDUCATION

34 CFR Chapter III

[Docket ID ED–2020–OSERS–0056]

Proposed Priorities and Definitions—American Indian Vocational Rehabilitation Services—Training and Technical Assistance

AGENCY: Office of Special Education and Rehabilitative Services (OSERS), Department of Education.

ACTION: Proposed priorities and definitions.

SUMMARY: The Department of Education (Department) proposes priorities and definitions to fund an American Indian Vocational Rehabilitation Training and Technical Assistance Center (AIVRTTAC), Catalog of Federal Domestic Assistance (CFDA) number 84.250Z. The Department may use the priorities and definitions for competitions in fiscal year (FY) 2020 and later years. We take this action to focus Federal financial assistance on

identified national needs and to improve employment outcomes and raise expectations for American Indians with disabilities. We intend the AIVRTTAC to provide training and technical assistance (TA) to American Indian Vocational Rehabilitation Services (AIVRS) project personnel, especially vocational rehabilitation (VR) counselors, in order to improve their capacity to implement innovative and effective VR services and employment strategies and practices to increase the number and quality of employment outcomes for American Indians with disabilities served through the AIVRS program.

DATES: We must receive your comments on or before October 13, 2020.

ADDRESSES: Submit your comments through the Federal eRulemaking Portal or via postal mail, commercial delivery, or hand delivery. We will not accept comments submitted by fax or by email or those submitted after the comment period. To ensure that we do not receive duplicate copies, please submit your comments only once. In addition, please include the Docket ID at the top of your comments.

- *Federal eRulemaking Portal:* Go to *www.regulations.gov* to submit your comments electronically. Information on using *Regulations.gov*, including instructions for accessing agency documents, submitting comments, and viewing the docket, is available on the site under ''Help.''
- *Postal Mail, Commercial Delivery, or Hand Delivery:* If you mail or deliver your comments, address them to Jerry Elliott, U.S. Department of Education, 400 Maryland Avenue SW, Room 5097, Potomac Center Plaza, Washington, DC 20202–2800.

Privacy Note: The Department's policy is to make all comments received from members of the public available for public viewing in their entirety on the Federal eRulemaking Portal at *www.regulations.gov.* Therefore, commenters should be careful to include in their comments only information that they wish to make publicly available.

FOR FURTHER INFORMATION CONTACT: Jerry Elliott, U.S. Department of Education, 400 Maryland Avenue SW, Room 5097, Potomac Center Plaza, Washington, DC 20202–2800. Telephone: (202)245–7335. Email: *jerry.elliott@ed.gov.*

If you use a telecommunications device for the deaf (TDD) or a text telephone (TTY), call the Federal Relay Service (FRS), toll free, at 1–800–877–8339.

SUPPLEMENTARY INFORMATION:

Invitation to Comment: We invite you to submit comments regarding the proposed priorities and definitions. To ensure that your comments have maximum effect in developing the notice of final priorities and definitions, we urge you to identify clearly the specific part of the priorities or definition that each comment addresses. In addition to your general comments and recommended clarifications, we seek input as to whether entities who may apply under this competition would have the ability to meet Proposed Priority 2, which is consistent with option (f) of the Secretary's Final Supplemental Priorities and Definitions for Discretionary Grant Programs, published in the **Federal Register** on March 2, 2018 (83 FR 9096), related to matching support, and if so, whether that priority should be included as an absolute priority, competitive preference priority, or an invitational priority and what the level of matching support should be.

We invite you to assist us in complying with the specific requirements of Executive Orders 12866, 13563, and 13771 and their overall requirement of reducing regulatory burden that might result from the proposed priorities and definitions. Please let us know of any ways we could reduce potential costs or increase potential benefits while preserving the effective and efficient administration of the program.

During and after the comment period, you may inspect all public comments about the proposed priorities and definitions by accessing *Regulations.gov.* Due to the current COVID–19 pandemic, the Department buildings are currently not open. However, upon reopening, you may also inspect the comments in person in room 5059, 550 12th Street SW, Washington, DC, between the hours of 9:30 a.m. and 4:00 p.m., Eastern time, Monday through Friday of each week except Federal holidays.

Assistance to Individuals with Disabilities in Reviewing the Rulemaking Record: On request we will provide an appropriate accommodation or auxiliary aid to an individual with a disability who needs assistance to review the comments or other documents in the public rulemaking record for the proposed priorities and definitions. If you want to schedule an appointment for this type of accommodation or auxiliary aid, please contact the person listed under **FOR FURTHER INFORMATION CONTACT**.

Purpose of Program: The purpose of the AIVRTTAC program is to provide training and TA to governing bodies of Indian Tribes, or consortia of those governing bodies, that have received an AIVRS grant under section 121(a) of the Rehabilitation Act of 1973, as amended (Act). Under section 121(c)(2) of the Act, the Commissioner of the Rehabilitation Services Administration (RSA) makes grants to, or enters into contracts or other cooperative agreements with, entities that have experience in the operation of AIVRS projects to provide such training and TA on developing, conducting, administering, and evaluating these projects.

Program Authority: 29 U.S.C. 741(c).

Applicable Program Regulations: 34 CFR part 371.

Proposed Priorities

This notice contains two proposed priorities.

Background

Section 121(c)(1) of the Act requires the Commissioner of RSA to reserve not less than 1.8 percent and not more than 2 percent of the funds set aside for the AIVRS program under section 110(c)(1) from the amount appropriated to the State VR program under section 100(b)(1) of the Act to provide training and TA to governing bodies of Indian Tribes and consortia of those governing bodies that have received an AIVRS grant, as well as their personnel.

Under section 121(a) of the Act, the Department funds 92 active AIVRS projects that provide VR services to American Indians with disabilities who reside on or near a Federal or State reservation, consistent with each individual's strengths, resources, priorities, concerns, abilities, capabilities, interests, and informed choice, so that they may prepare for, and engage in, high-quality competitive integrated employment that will increase opportunities for economic self-sufficiency. In FY 2015, the Department funded one grant under section 121(c) for an AIVRTTAC to provide training and TA to the AIVRS projects.

The AIVRTTAC funded in FY 2015 has provided intensive, sustained TA; targeted, specialized TA; and universal, general TA to governing bodies of Indian Tribes that have received an AIVRS grant and to the personnel of the AIVRS projects in the following topic areas:

(a) Applicable laws and regulations governing the AIVRS program.

(b) Promising practices for providing VR services to American Indians with disabilities.

(c) Delivering VR services to American Indians with disabilities, including the determination of

eligibility, case management, case record documentation, assessment, development of the individualized plan for employment (IPE), and placement into competitive integrated employment.

(d) Assistive technology (AT), including what AT is, how to evaluate the need for AT, use of AT, and access to AT.

(e) Implementing professional development practices to ensure effective project coordination, administration, and management.

(f) Implementing appropriate financial and grant management practices to ensure compliance with the Office of Management and Budget's (OMB) Uniform Guidance (2 CFR 200) and the Education Department General Administrative Regulations (EDGAR).

(g) Evaluating project performance, including data collection, data analysis, and reporting.

Also, in FY 2015, RSA used a different funding source, section 21 of the Act, to fund one grant for a Vocational Rehabilitation Training Institute for the Preparation of Personnel in American Indian Vocational Rehabilitation (the Institute). The Institute was designed to provide a structured program of VR training to personnel of the AIVRS projects to improve the delivery of VR services to American Indians with disabilities. The Institute included in its training a series of courses specifically geared toward building foundational skills that, when satisfactorily completed, led to a VR certificate awarded by the Institute. The Institute's training was intentionally different in scope and sequence than was the training and TA provided by the AIVRTTAC funded in FY 2015, which provided more concentrated short-term training in specific areas.

Together, the AIVRTTAC and the Institute comprise the totality of RSA-funded training and TA to the AIVRS projects to date.

Both projects funded in FY 2015 are now in their fifth and final year of operation, and both have proven to be successful in delivering training and TA to the AIVRS projects. For example, as of the second quarter of grant year five, the Institute provided outreach to 2,093 participants, almost seven times the outreach goal; and enrolled 226 personnel from 61 AIVRS programs in multiple offerings of thirteen different courses, exceeding their goal by more than 10 percent.

The AIVRTTAC has developed and delivered intensive TA to 23 AIVRS projects to date. Thirteen AIVRS projects have completed all intensive TA activities included in the intensive TA agreement. Ten AIVRS projects are currently working on intensive TA activities. Additionally, there are four AIVRS projects currently developing requests for intensive TA. The AIVRTTAC has developed 41 products or tools to support the provision of intensive, targeted, and universal TA, with 21 more products and tools under development.

The grantees that participated in intensive TA are showing improvements in the documentation of service records and the provision of VR services to project participants. For example, among grantees that participated in intensive TA, documentation that participants had been notified of their rights and responsibilities increased from 33 percent to 100 percent. Similarly, external partnerships increased significantly, including partnerships with schools (increased from 0 to 6) and businesses (increased from 0 to 25), as well as training events with business partners (increased from 0 to 18).

Each intensive TA plan is customized to the individual needs of the AIVRS project and targets areas of improvement based on input and requests from the project staff and areas of need identified by the pre-TA service record review. During on-site and desk monitoring of the two TA centers and of the AIVRS projects conducted over several years, RSA has observed the need to continue to assist AIVRS personnel to work more effectively with American Indians with disabilities and to fulfill their roles as VR counselors, VR support personnel, and project administrators. There are four factors that contribute to this need. First, many of the personnel employed by AIVRS projects live in rural and remote communities. While many of these individuals have relevant experience in social service fields, they have not been able to obtain formal training in rehabilitation counseling.

Second, the remote locations of many AIVRS projects not only make it difficult for local personnel to obtain further training due to distance and cost, but they also make it difficult to recruit VR counselors from other locations to work for AIVRS projects.

Third, the AIVRS program requires projects to give a preference in hiring to American Indians, with a special priority being given to American Indians with disabilities. While American Indians may be knowledgeable of American Indian cultural practices and norms, this preference in hiring requirement makes it difficult to find VR counselors who have experience with VR and who are also familiar with the Indian Tribe's particular cultural practices and norms.

Fourth, the AIVRS projects have historically had high personnel turnover rates. The need for basic training and skills development is ongoing as new personnel are hired.

Based on these factors, RSA determined that AIVRS personnel could benefit from a structured training program focused on the VR process and practices and the unique skills and knowledge necessary to improve employment outcomes for this population. For example, AIVRS personnel require a better understanding of how various disabilities affect an individual's ability to participate in competitive employment, how to interview and evaluate the eligibility of prospective AIVRS consumers respectfully and appropriately, how to develop a reasonable and achievable IPE, how to effectively manage the VR services and supports provided to the individual identified in the IPE, how to obtain and use accurate labor market information to understand the skill needs and demands of local employers, and how to develop employment opportunities to meet those demands that are at appropriate skill levels and consistent with the consumer's aspirations, as documented in the IPE. AIVRS personnel also need to understand how job training, reasonable accommodations, and assistive technology help individuals with disabilities to pursue, obtain, and retain competitive employment. In addition, project administrators would benefit from training in areas such as financial management and accountability, performance measurement, and case management.

To help determine funding priorities, section 121(c)(3) of the Act requires RSA to survey the governing bodies of Indian Tribes operating AIVRS projects to identify their training and TA needs. To do that, RSA considered the results of the needs survey each AIVRS project submitted as part of the most recent annual performance report (APR) and the results of the Tribal consultation on this competition undertaken by RSA. Analysis of APR survey results over four years showed continuing demand for almost all topics, even though the relative demand for various topics shifted somewhat from the initial survey conducted in 2015. Training is consistently requested on applicable laws, outreach to veterans, eligibility determination, and IPE development. In addition, there has recently been an increase in requests for training on Federal regulations applying to grants management, strategies for working with

individuals with physical and mental disabilities, budget management, case management, case record documentation, outreach to underserved populations regarding disability and institutionalized potential consumers, VR services, and AIVRS data collection and reporting.

Tribal Consultation: RSA conducted Tribal consultation on this competition in two primary ways. First, RSA conducted targeted consultation at a conference of the Consortia of Administrators for Native American Rehabilitation (CANAR) in December 2019. The conference is for AIVRS project directors—the personnel who had been served by both the AIVRTTAC and the Institute and would be served by the new training and TA grantee. RSA conducted an open Tribal input session on December 5, 2019 and invited a small focus group of AIVRS project directors to provide input on December 3, 2019.

Second, RSA issued a request for consultation to all Tribal leaders through the Department's Office of Indian Education's listserve on December 4, 2019. This request was open for 31 days and asked for responses by January 3, 2020. A second request for consultation was sent to the Tribal leaders and AIVRS project directors of Tribes operating AIVRS projects. This request was open from December 9, 2019, through January 9, 2020.

The Tribal requests for consultation consisted of a survey of the topics and methodologies used by the current TA providers—AIVRTTAC and the Institute—as well as open-ended questions about how training and TA could be improved or changed. The results of the Tribal consultation survey and the input from the Tribal consultation focus groups showed support for continuing both the activities of the AIVRTTAC and the Institute and for continuing the specific topics addressed by each entity. There was also support for continuing the training delivery models developed by both entities.

The structure of training and TA was also discussed during the Tribal consultation. The structural issue involved deciding whether to combine the types of training and TA provided by the AIVRTTAC and the Institute into a single project. There was no consensus on whether to change the structure of the AIVRTTAC project funded under a new competition. Tribal consultation input included support for combining the two projects and for retaining them separately.

Tribal consultation input indicated that some AIVRS project personnel wanted a single AIVRS website where AIVRS related material could be retained, archived, and accessed in a single location. The Tribal consultation also included suggestions for additional training and TA needs that will be incorporated into the final priority and the cooperative agreement.

Proposed Priority 1

Background

RSA proposes for the FY 2020 competition to continue to build upon the functions and activities of both the AIVRTTAC and the Institute but combine these functions into a single grant. RSA has noted some overlap and duplication in the content of the modules developed by the Institute and the tools, webinars, and on-site TA delivered by the AIVRTTAC, as well as duplication of overhead functions such as maintaining two websites. In addition, while funding available for training and TA under section 121(c) of the Act has increased, overall funding for training and TA for the AIVRS projects has decreased, because the Act's section 21 funds that were used for the Institute in FY 2015 will not be available as they have been redirected to other priorities in FY 2020. We believe that a single grantee will be able to work within funding limitations to reduce administrative inefficiencies and deliver effective training and TA using identified and potentially new methods and modules.

Proposed priority 1 is designed to assist AIVRS projects to implement—(1) efficient and effective project and resource management techniques to increase the numbers of, and improve the skills of, VR counselors and other service delivery personnel; and (2) innovative employment and support strategies provided by these personnel to improve employment outcomes and career advancement for individuals with disabilities. The AIVRTTAC funded under this priority would do this by—

- Developing current and, to the extent possible, evidence-based training modules for use with AIVRS projects, both for use as part of VR education programs and certificate programs, and as stand-alone modules;
- Providing on-site and other direct training and guidance to individual AIVRS projects and Tribal governments to implement best practices and training module content; and
- Through both academic content and direct TA, providing AIVRS project managers, professionals, and paraprofessionals with the knowledge to meet the unique needs of American Indians with disabilities.

Consistent with the Secretary's priorities, proposed priority 1 is designed to implement strategies that ensure Department funds are spent in a way that increases their efficiency and cost effectiveness, including by reducing waste or achieving better outcomes.

Proposed Priority 1

American Indian Vocational Rehabilitation Services—Training and Technical Assistance Program

This priority would fund a five-year cooperative agreement to establish an American Indian Vocational Rehabilitation Training and Technical Assistance Center (AIVRTTAC) to provide four types of training and technical assistance (TA) for the personnel of the American Indian Vocational Rehabilitation Services (AIVRS) projects awarded under section 121(a) of the Rehabilitation Act of 1973, as amended (Act), to the governing bodies of Indian Tribes. The four types of training and TA are: (1) Intensive, sustained training and TA; (2) targeted, specialized training and TA; (3) universal, general training and TA; and (4) capacity-building for AIVRS project personnel through training modules that build foundational skills for the delivery of VR services to AIVRS project participants. The AIVRTTAC will develop and provide these types of training and TA for AIVRS projects in the following topic areas:

(a) Applicable laws and regulations governing the AIVRS program.

(b) Promising practices for providing VR services to American Indians with disabilities.

(c) The delivery of VR services to American Indians with disabilities, including the determination of eligibility, case management, case record documentation, assessment, development of the individualized plan for employment, and placement into competitive integrated employment.

(d) Knowledge of assistive technology (AT), including the definition of AT, how to evaluate the need for AT and what types of AT are available, use of AT, and access to AT.

(e) Implementing professional development practices to ensure effective project coordination, administration, and management.

(f) Implementing appropriate financial and grant management practices to ensure compliance with OMB's Uniform Guidance (2 CFR part 200) and the Education Department General Administrative Regulations.

(g) Evaluating project performance, including data collection, data analysis, and reporting.

Specific subjects for training and TA in each of these topic areas will be identified on an annual basis and in coordination with RSA.

Project Activities

To be considered for funding under this priority, applicants must conduct the following activities, or a subset of the following activities as determined by the Department, in a culturally appropriate manner:

(a) Maintain and build upon the 12 training modules and the fiscal tool kit developed by the Institute in the previous grant cycle, including maintaining the series of seven training modules that build foundational skills that, when satisfactorily completed, lead to a VR certificate to be awarded by the AIVRTTAC. To satisfy this activity requirement, the grantee—

(i) May determine whether the VR certificate awarded will be academic or non-academic, the requirements for obtaining such a certificate, and how the certificate may be used by the participants who earned it;

(ii) May offer the series of training modules in a traditional classroom setting, through distance learning, through week-long institutes, at regional trainings throughout the country as an extension of national conferences, and through other delivery methods, as appropriate, to meet the needs of the targeted audience;

(iii) May use grant funds to provide reasonable financial assistance for the cost of tuition and fees and training materials and to offset costs associated with travel for participants who may be in remote areas of the country;

(iv) Must conduct an assessment before and after providing training for each participant in order to assess strengths and specific areas for improvement, educational attainment and application of skills, and any issues or challenges to be addressed post-training to ensure improved delivery of VR services to American Indians with disabilities;

(v) Must provide follow-up TA to participants to address any issues or challenges that are identified post-training and to ensure that the training they received is applied effectively in their work setting, and such follow-up may be conducted as part of the provision of targeted or intensive TA as determined by the needs of the specific AIVRS project;

(vi) Must conduct an evaluation to obtain feedback on the training and follow-up TA and to determine whether this training and TA contributed to increased employment outcomes for American Indians with disabilities; and

(vii) May develop additional training modules as negotiated through the cooperative agreement.

(b) Maintain and build upon the topics and tools the current AIVRRTAC has developed to provide intensive, sustained training and TA. To satisfy this activity requirement, the grantee must—

(i) Develop and provide intensive, sustained training and TA to a minimum of three AIVRS projects in the first year. For future years, the minimum number of AIVRS projects to receive intensive, sustained training and TA will be negotiated through the cooperative agreement;

(ii) Develop and implement training and TA consistent with AIVRS project activities and tailored to the specific needs and challenges of the AIVRS project receiving the intensive training and TA;

(iii) Provide training and TA under an agreement with each AIVRS project receiving intensive training and TA that, at a minimum, details the purpose of the training and TA, intended outcomes, and requirements for the subsequent evaluation of the training and TA; and

(iv) Assess the results of the training and TA 90 days after its completion to ensure that the recipient is able to apply effectively the training and TA, identify any issues or challenges in its implementation, and provide additional training and TA, either virtually or on-site, as needed.

(c) Maintain and build upon the topics and tools the current AIVRTTAC has developed to provide a range of targeted, specialized training and TA in the topic areas described in this priority based on needs common to multiple AIVRS projects. The new grantee must follow up with the recipients of targeted, specialized training and TA it provides in order to determine the effectiveness of the training and TA;

(d) Maintain and build upon the topics and tools the current AIVRTTAC has developed to provide universal, general training and TA in the topic areas in this priority;

(e) Provide a minimum of two webinars or video conferences in each of the topic areas in this priority to describe and disseminate up-to-date information, guides, examples, and emerging and promising practices in each area;

(f) Develop new information technology (IT) platforms and systems, or modify existing platforms and systems, as follows:

(i) Develop or modify, and maintain, a state-of-the-art IT platform capable and reliable enough to support webinars, teleconferences, video conferences, and other virtual methods of dissemination of information and TA;

(ii) Develop or modify, and maintain, a state-of-the-art archiving and dissemination system that is open and available to all AIVRS projects and that provides a central location for all AIVRS training and TA products for later use, including course curricula, audiovisual materials, webinars, examples of promising practices related to the topic areas in this priority, the primary areas identified through the annual surveys completed by AIVRS projects, other topics identified by RSA, and other relevant TA products (the possibility of collaborating with the National Clearinghouse of Rehabilitation Training Materials will be considered with the grantee and included in the cooperative agreement, as appropriate);

(iii) Ensure that all products produced by the AIVRTTAC meet government and industry-recognized standards for accessibility; and

(iv) Ensure that all products, resources, and materials developed by the AIVRTTAC are widely disseminated across the AIVRS projects and reflect the AIVRS population and diversity among its communities to the maximum extent possible.

(g) Establish a community of practice (or communities of practice) that will serve as a vehicle for communication, an exchange of information among AIVRS projects, and a forum for sharing the results of training and TA projects that are in progress or have been completed;

(h) Conduct outreach to AIVRS projects so that they are aware of, and can participate in, training and TA activities; and

(i) Conduct an evaluation to determine the quality, relevance, and usefulness of the AIVRTTAC's training and TA, including the impact of the AIVRTTAC's activities on the ability of AIVRS projects to effectively manage their projects and improve the delivery of VR services to American Indians with disabilities.

Application Requirements

To be funded under this priority, applicants must meet the application requirements in this priority. RSA encourages innovative approaches to meet these requirements, which are—

(a) Demonstrate in the narrative section of the application under ''Significance of the Proposed Project'' how the proposed project will—

(1) Use the applicant's knowledge and experience in the operation of AIVRS projects in order to provide training and TA for these projects;

(2) Address the AIVRS projects' capacity to effectively implement an AIVRS project. To meet this requirement, the applicant must—

(i) Demonstrate knowledge of emerging and promising practices in the topic areas in this priority;

(ii) Demonstrate knowledge of current RSA guidance and Federal initiatives designed to improve the functioning of grant projects in general and grant projects for American Indian Tribes in particular; and

(iii) Present information about the difficulties that AIVRS grantees have encountered in implementing effective AIVRS projects;

(b) Demonstrate in the narrative section of the application under ''Quality of Project Design'' how the proposed project will—

(1) Achieve its goals, objectives, and intended outcomes. To meet this requirement, the applicant must provide—

(i) Measurable intended project outcomes;

(ii) A plan for how the proposed project will achieve its intended outcomes;

(iii) A plan for communicating and coordinating with RSA and key personnel of AIVRS projects; and

(iv) A draft training module or outline for a targeted TA training presentation or an outline for intensive TA activities for one of the topic areas in this priority to demonstrate how participants would be trained in that area. The module or outline is a required attachment in the application and must include, at a minimum, the following:

(A) The goals and objectives of this training module, targeted training activity, or intensive TA activities;

(B) A specific list of what participants should know and be able to do as a result of successfully completing the module, targeted training activity, or intensive TA activities;

(C) Up-to-date resources, publications, applicable laws and regulations, and other materials that may be used to develop the module, targeted training activity, or intensive TA activities;

(D) Exercises that will provide an opportunity for application of the subject matter;

(E) A description of how participant knowledge, skills, and abilities will be measured; and

(F) In the case of an intensive TA intervention, how the outcomes and impact of the intensive TA intervention will be measured;

(2) Use a logic model to develop project plans and activities that includes, at a minimum, the goals, activities, outputs, and outcomes of the proposed project;

(3) Be based on current research and make use of emerging and promising practices, and evidence-based practices, where available. To meet this requirement the applicant must describe—

(i) The current research on the emerging and promising practices in the topic areas in this priority; and

(ii) How the AIVRTTAC will incorporate current research and promising and evidence-based practices, including research about adult learning principles and implementation science, in the development and delivery of its products and services;

(4) Develop products and provide services that are of high quality and of sufficient intensity and duration to achieve the intended outcomes of the proposed project. To address this requirement the applicant must describe—

(i) Its proposed approach to universal, general training and TA;

(ii) Its proposed approach to targeted, specialized training and TA, which must identify—

(A) The intended recipients of the products and services under this approach, including the categories of personnel that would be receiving the training and TA;

(B) Its proposed methods for providing targeted, specialized training and TA; and

(C) Its proposed methodology for determining topics for the targeted, specialized training and TA;

(iii) Its proposed approach to intensive, sustained training and TA, which must identify—

(A) Its proposed approach to identifying recipients for intensive, sustained training and TA;

(B) Its proposed methodology for providing intensive, sustained training and TA to recipients; and

(C) Its proposed approach to assessing the training and TA needs of recipients, including their ability to respond effectively to the training and TA; and

(iv) Its proposed approach to maintaining and building upon capacity-building modules, which must identify—

(A) Its proposed approach to maintaining the 12 training modules and the fiscal tool kit developed by the Institute in the previous grant cycle, including maintaining the series of seven training modules that build foundational skills that, when satisfactorily completed, lead to a VR certificate to be awarded by the new grantee; and

(B) Its proposed approach to identifying, developing and delivering new capacity-building modules; and

(5) Develop products and implement services to maximize the proposed project's efficiency. To address this requirement, the applicant must describe—

(i) How the proposed project will use technology to achieve the intended project outcomes;

(ii) With whom the proposed project will collaborate and the intended outcomes of this collaboration; and

(iii) In particular, how the proposed project will coordinate and collaborate with other RSA-funded technical assistance centers to exchange and adapt relevant products and materials to avoid duplication and make effective use of grant funds to better manage the AIVRTTAC project and its available resources to improve service delivery to AIVRS projects;

(c) Demonstrate in the narrative section of the application under ''Adequacy of Project Resources'' how—

(1) The applicant and any key partners possess adequate resources to carry out the proposed activities; and

(2) The proposed costs are reasonable in relation to the anticipated results and benefits;

(d) Demonstrate in the narrative section of the application under ''Quality of Project Personnel'' how—

(1) The proposed project will encourage applications for employment from persons who are members of groups that have historically been underrepresented based on race, color, national origin, gender, age, or disability, as appropriate; and

(2) The proposed key project personnel, consultants, and subcontractors have the qualifications and experience to provide training and TA to AIVRS projects in each of the topic areas in this priority and to achieve the project's intended outcomes, including how the proposed project personnel have a high degree of knowledge and understanding of cultural factors that will be sufficient to ensure the delivery of training and TA in a culturally appropriate manner;

(e) Demonstrate in the narrative section of the application under ''Quality of the Management Plan'' how the proposed management plan will ensure that the project's intended outcomes will be achieved on time and within budget. To address this requirement, the applicant must describe—

(1) Clearly defined roles and responsibilities for two full-time key

project personnel designated to the AIVRTTAC through the entire project period and for consultants and subcontractors, as applicable;

(2) Timelines and milestones for accomplishing the project tasks;

(3) Using a personnel loading chart, detailed project activities through the entire project period, key personnel and any consultants or subcontractors that will be allocated to each activity, and the designated level of effort for each of those activities;

(4) How the personnel allocations in the personnel loading chart are appropriate and adequate to achieve the project's intended outcomes, including an assurance that all personnel will communicate with stakeholders and RSA in a timely fashion;

(5) How the proposed management plan will ensure that the training and TA products developed through this cooperative agreement are complete, accurate, and of high quality; and

(6) How the proposed project will benefit from a diversity of perspectives, including AIVRS projects and consumers, State VR agencies, TA providers, and policy makers, in its development and operation; and

(f) Demonstrate in the narrative section of the application under ''Quality of the Evaluation Plan'' how the applicant proposes to collect and analyze data on specific and measurable goals, objectives, and intended outcomes of the project, including the effectiveness of the training and TA provided. To address this requirement, the applicant must describe—

(i) Its proposed evaluation methodologies, including instruments, data collection methods, and analyses;

(ii) Its proposed standards or targets for determining effectiveness;

(iii) How it will use the evaluation results to examine the effectiveness of its implementation and its progress toward achieving the intended outcomes; and

(iv) How the methods of evaluation will produce quantitative and qualitative data that demonstrate whether the project and individual training and TA activities achieved their intended outcomes.

Proposed Priority 2

Background

In this second priority, RSA proposes a matching requirement to increase the vested interest of the grantee in the success of the project and to maximize the Federal investment because additional funds provided through the match would allow the grantee to support more activities. In addition, this matching requirement may provide an opportunity for grantees to identify and partner with other entities, resulting in cooperative partnerships that could ultimately improve sustainability of the projects.

Proposed Priority 2

Projects that are designed to demonstrate matching support for the proposed projects at one or more of the following levels:

(a) 10 percent of the Federal amount of the grant.

(b) 20 percent of the Federal amount of the grant.

(c) 30 percent of the Federal amount of the grant.

(d) 40 percent of the Federal amount of the grant.

(e) 50 percent of the Federal amount of the grant.

Types of Priorities

When inviting applications for a competition using one or more priorities, we designate the type of each priority as absolute, competitive preference, or invitational through a notice in the **Federal Register**. The effect of each type of priority follows:

Absolute priority: Under an absolute priority, we consider only applications that meet the priority (34 CFR 75.105(c)(3)).

Competitive preference priority: Under a competitive preference priority, we give competitive preference to an application by (1) awarding additional points, depending on the extent to which the application meets the priority (34 CFR 75.105(c)(2)(a)); or (2) selecting an application that meets the priority over an application of comparable merit that does not meet the priority (34 CFR 75.105(c)(2)(ii)).

Invitational priority: Under an invitational priority, we are particularly interested in applications that meet the priority. However, we do not give an application that meets the priority a preference over other applications (34 CFR 75.105(c)(1)).

Proposed Definitions

We propose the following definitions for use with these proposed priorities to ensure that applicants have a clear understanding of how these terms are being used.

Intensive training and technical assistance means training and technical assistance provided to the governing bodies of Indian Tribes that have received an AIVRS grant and to the current personnel of the AIVRS projects primarily on-site over an extended period. Intensive training and technical assistance is based on an ongoing relationship between the training and technical assistance center personnel and the governing bodies of Indian Tribes that have received an AIVRS grant and the current personnel of the AIVRS projects under the terms of a signed intensive training and technical assistance agreement.

Targeted training and technical assistance means training and technical assistance based on needs common to one or more governing bodies of Indian Tribes that have received an AIVRS grant and to the current personnel of the AIVRS projects on a time-limited basis and with limited commitment of training and technical assistance center resources. Targeted training and technical assistance are delivered through virtual or in-person methods tailored to the identified needs of the participating governing bodies of Indian Tribes that have received an AIVRS grant and to the current personnel of the AIVRS projects.

Universal training and technical assistance means training and technical assistance broadly available to governing bodies of Indian Tribes that have received an AIVRS grant and to the current personnel of the AIVRS projects and other interested parties through their own initiative, resulting in minimal interaction with training and technical assistance center personnel. Universal training and technical assistance include generalized presentations, products, and related activities available through a website or through brief contacts with the training and technical assistance center personnel.

Final Priorities and Definitions: We will announce the final priorities and definitions in a notice in the **Federal Register**. We will determine the final priorities and definitions after considering responses to the proposed priorities and definitions and other information available to the Department. This document does not preclude us from proposing additional priorities, requirements, definitions, or selection criteria, subject to meeting applicable rulemaking requirements.

Note: This document does *not* solicit applications. In any year in which we choose to use the priorities or definitions, we invite applications through a notice in the **Federal Register**.

Executive Orders 12866, 13563, and 13771

Regulatory Impact Analysis

Under Executive Order 12866, the Office of Management and Budget (OMB) determines whether this regulatory action is ''significant'' and,

therefore, subject to the requirements of the Executive order and subject to review by OMB. Section 3(f) of Executive Order 12866 defines a ''significant regulatory action'' as an action likely to result in a rule that may—

(1) Have an annual effect on the economy of $100 million or more, or adversely affect a sector of the economy, productivity, competition, jobs, the environment, public health or safety, or State, local, or Tribal governments or communities in a material way (also referred to as an ''economically significant'' rule);

(2) Create serious inconsistency or otherwise interfere with an action taken or planned by another agency;

(3) Materially alter the budgetary impacts of entitlement grants, user fees, or loan programs or the rights and obligations of recipients thereof; or

(4) Raise novel legal or policy issues arising out of legal mandates, the President's priorities, or the principles stated in the Executive order.

OMB has determined that this proposed regulatory action is not a significant regulatory action subject to review by OMB under section 3(f) of Executive Order 12866.

Under Executive Order 13771, for each new rule that the Department proposes for notice and comment or otherwise promulgates that is a significant regulatory action under Executive Order 12866 and that imposes total costs greater than zero, it must identify two deregulatory actions. For FY 2020, any new incremental costs associated with a new rule must be fully offset by the elimination of existing costs through deregulatory actions. However, Executive Order 13771 does not apply to ''transfer rules'' that cause only income transfers between taxpayers and program beneficiaries, such as those regarding discretionary grant programs. Because the proposed priorities and definitions would be utilized in connection with a discretionary grant program, Executive Order 13771 does not apply.

We have also reviewed this proposed regulatory action under Executive Order 13563, which supplements and explicitly reaffirms the principles, structures, and definitions governing regulatory review established in Executive Order 12866. To the extent permitted by law, Executive Order 13563 requires that an agency—

(1) Propose or adopt regulations only upon a reasoned determination that their benefits justify their costs (recognizing that some benefits and costs are difficult to quantify);

(2) Tailor its regulations to impose the least burden on society, consistent with obtaining regulatory objectives and taking into account—among other things and to the extent practicable—the costs of cumulative regulations;

(3) In choosing among alternative regulatory approaches, select those approaches that maximize net benefits (including potential economic, environmental, public health and safety, and other advantages; distributive impacts; and equity);

(4) To the extent feasible, specify performance objectives, rather than the behavior or manner of compliance a regulated entity must adopt; and

(5) Identify and assess available alternatives to direct regulation, including economic incentives—such as user fees or marketable permits—to encourage the desired behavior, or provide information that enables the public to make choices.

Executive Order 13563 also requires an agency ''to use the best available techniques to quantify anticipated present and future benefits and costs as accurately as possible.'' The Office of Information and Regulatory Affairs of OMB has emphasized that these techniques may include ''identifying changing future compliance costs that might result from technological innovation or anticipated behavioral changes.''

We are issuing the proposed priorities and definitions only on a reasoned determination that their benefits justify their costs. In choosing among alternative regulatory approaches, we selected those approaches that maximize net benefits. Based on the analysis that follows, the Department believes that this regulatory action is consistent with the principles in Executive Order 13563.

We have also determined that this regulatory action does not unduly interfere with State, local, and Tribal governments in the exercise of their governmental functions.

In accordance with these Executive orders, the Department has assessed the potential costs and benefits, both quantitative and qualitative, of this regulatory action. The potential costs are those resulting from statutory requirements and those we have determined as necessary for administering the Department's programs and activities. The costs would include the time and effort in responding to the priorities for entities that choose to respond.

In addition, we have considered the potential benefits of this regulatory action and have noted these benefits in the background section of this document. The benefits include receiving comments regarding the need to continue to provide both TA and a structured training program focused on the VR process and practices and the unique skills and knowledge necessary to improve employment outcomes for American Indians with disabilities.

Clarity of the Regulations

Executive Order 12866 and the Presidential memorandum ''Plain Language in Government Writing'' require each agency to write regulations that are easy to understand. The Secretary invites comments on how to make the proposed priorities and definitions easier to understand, including answers to questions such as the following:

- Are the requirements in the proposed regulations clearly stated?
- Do the proposed regulations contain technical terms or other wording that interferes with their clarity?
- Does the format of the proposed regulations (grouping and order of sections, use of headings, paragraphing, etc.) aid or reduce their clarity?
- Would the proposed regulations be easier to understand if we divided them into more (but shorter) sections?
- Could the description of the proposed regulations in the **SUPPLEMENTARY INFORMATION** section of the preamble be more helpful in making the proposed regulations easier to understand? If so, how?
- What else could we do to make the proposed regulations easier to understand?

To send any comments that concern how the Department could make these proposed regulations easier to understand, see the instructions in the **ADDRESSES** section.

Regulatory Flexibility Act Certification: The Secretary certifies that this proposed regulatory action would not have a significant economic impact on a substantial number of small entities. The U.S. Small Business Administration Size Standards define proprietary institutions as small businesses if they are independently owned and operated, are not dominant in their field of operation, and have total annual revenue below $7,000,000. Nonprofit institutions are defined as small entities if they are independently owned and operated and not dominant in their field of operation. Public institutions are defined as small organizations if they are operated by a government overseeing a population below 50,000.

The small entities that this proposed regulatory action would affect are public or private nonprofit agencies and

organizations, including Indian Tribes and institutions of higher education that may apply. We believe that the costs imposed on an applicant by the proposed priorities and definitions would be limited to paperwork burden related to preparing an application and that the benefits of the proposed priorities and definitions would outweigh any costs incurred by the applicant. There are very few entities who could provide the type of TA required under the proposed priorities. For these reasons the proposed priorities and definitions would not impose a burden on a significant number of small entities.

Paperwork Reduction Act of 1995: The proposed priorities and definitions contain information collection requirements that are approved by OMB under OMB control number 1820–0018.

Assessment of Educational Impact

In accordance with section 411 of the General Education Provisions Act, 20 U.S.C. 1221e–4, the Secretary particularly requests comments on whether these proposed regulations would require transmission of information that any other agency or authority of the United States gathers or makes available.

Accessible Format: Individuals with disabilities can obtain this document in an accessible format (*e.g.,* braille, large print, audiotape, or compact disc) on request to the program contact person listed under **FOR FURTHER INFORMATION CONTACT**.

Electronic Access to This Document: The official version of this document is the document published in the **Federal Register**. You may access the official edition of the **Federal Register** and the Code of Federal Regulations at *www.govinfo.gov.* At this site you can view this document, as well as all other documents of this Department published in the **Federal Register**, in text or Portable Document Format (PDF). To use PDF, you must have Adobe Acrobat Reader, which is available free at the site.

You may also access documents of the Department published in the **Federal Register** by using the article search feature at: *www.federalregister.gov.* Specifically, through the advanced search feature at this site, you can limit your search to documents published by the Department.

Mark Schultz,

Commissioner, Rehabilitation Services Administration. Delegated the authority to perform the functions and duties of the Assistant Secretary for the Office of Special Education and Rehabilitative Services.

[FR Doc. 2020–19925 Filed 9–8–20; 4:15 pm]

BILLING CODE 4000–01–P

ENVIRONMENTAL PROTECTION AGENCY

40 CFR Part 180

[EPA–HQ–OPP–2020–0053; FRL–10013–78]

Receipt of a Pesticide Petition Filed for Residues of Pesticide Chemicals in or on Various Commodities (July 2020)

AGENCY: Environmental Protection Agency (EPA).

ACTION: Notice of filing of petition and request for comment.

SUMMARY: This document announces the Agency's receipt of an initial filing of a pesticide petition requesting the establishment or modification of regulations for residues of pesticide chemicals in or on various commodities.

DATES: Comments must be received on or before October 13, 2020.

ADDRESSES: Submit your comments, identified by docket identification (ID) number by one of the following methods:

- *Federal eRulemaking Portal: http://www.regulations.gov.* Follow the online instructions for submitting comments. Do not submit electronically any information you consider to be Confidential Business Information (CBI) or other information whose disclosure is restricted by statute.
- *Mail:* OPP Docket, Environmental Protection Agency Docket Center (EPA/DC), (28221T), 1200 Pennsylvania Ave. NW, Washington, DC 20460–0001.
- *Hand Delivery:* To make special arrangements for hand delivery or delivery of boxed information, please follow the instructions at *https://www.epa.gov/dockets/where-send-comments-epa-dockets.*

Due to the public health concerns related to COVID–19, the EPA Docket Center (EPA/DC) and Reading Room is closed to visitors with limited exceptions. The staff continues to provide remote customer service via email, phone, and webform. For the latest status information on EPA/DC services and docket access, visit *https://www.epa.gov/dockets.*

FOR FURTHER INFORMATION CONTACT: Marietta Echeverria, Registration Division (7505P), main telephone number: (703) 305–7090, email address: *RDFRNotices@epa.gov.* The mailing address is: Office of Pesticide Programs, Environmental Protection Agency, 1200 Pennsylvania Ave. NW, Washington, DC 20460–0001. As part of the mailing address, include the contact's name, division, and mail code.

SUPPLEMENTARY INFORMATION:

I. General Information

A. Does this action apply to me?

You may be potentially affected by this action if you are an agricultural producer, food manufacturer, or pesticide manufacturer. The following list of North American Industrial Classification System (NAICS) codes is not intended to be exhaustive, but rather provides a guide to help readers determine whether this document applies to them. Potentially affected entities may include:

- Crop production (NAICS code 111).
- Animal production (NAICS code 112).
- Food manufacturing (NAICS code 311).
- Pesticide manufacturing (NAICS code 32532).

B. What should I consider as I prepare my comments for EPA?

1. *Submitting CBI.* Do not submit this information to EPA through *regulations.gov* or email. Clearly mark the part or all of the information that you claim to be CBI. For CBI information in a disk or CD–ROM that you mail to EPA, mark the outside of the disk or CD–ROM as CBI and then identify electronically within the disk or CD–ROM the specific information that is claimed as CBI. In addition to one complete version of the comment that includes information claimed as CBI, a copy of the comment that does not contain the information claimed as CBI must be submitted for inclusion in the public docket. Information so marked will not be disclosed except in accordance with procedures set forth in 40 CFR part 2.

2. *Tips for preparing your comments.* When preparing and submitting your comments, see the commenting tips at *https://www.epa.gov/dockets/commenting-epa-dockets.*

3. *Environmental justice.* EPA seeks to achieve environmental justice, the fair treatment and meaningful involvement of any group, including minority and/or low-income populations, in the development, implementation, and enforcement of environmental laws,

regulations, and policies. To help address potential environmental justice issues, the Agency seeks information on any groups or segments of the population who, as a result of their location, cultural practices, or other factors, may have atypical or disproportionately high and adverse human health impacts or environmental effects from exposure to the pesticides discussed in this document, compared to the general population.

II. What action is the Agency taking?

EPA is announcing receipt of a pesticide petition filed under section 408 of the Federal Food, Drug, and Cosmetic Act (FFDCA), 21 U.S.C. 346a, requesting the establishment or modification of regulations in 40 CFR part 174 and/or part 180 for residues of pesticide chemicals in or on various food commodities. The Agency is taking public comment on the request before responding to the petitioner. EPA is not proposing any particular action at this time. EPA has determined that the pesticide petition described in this document contains data or information prescribed in FFDCA section 408(d)(2), 21 U.S.C. 346a(d)(2); however, EPA has not fully evaluated the sufficiency of the submitted data at this time or whether the data supports granting of the pesticide petition. After considering the public comments, EPA intends to evaluate whether and what action may be warranted. Additional data may be needed before EPA can make a final determination on this pesticide petition.

Pursuant to 40 CFR 180.7(f), a summary of the petition that is the subject of this document, prepared by the petitioner, is included in a docket EPA has created for this rulemaking. The docket for this petition is available at *http://www.regulations.gov.*

As specified in FFDCA section 408(d)(3), 21 U.S.C. 346a(d)(3), EPA is publishing notice of the petition so that the public has an opportunity to comment on this request for the establishment or modification of regulations for residues of pesticides in or on food commodities. Further information on the petition may be obtained through the petition summary referenced in this unit.

New Tolerance Exemptions for Inerts (Except PIPS)

PP IN–11369. (EPA–HQ–OPP–2020–0349) Valagro S.p.A., c/o SciReg, Inc., 12733 Director's Loop, Woodbridge, VA 22192, requests to establish an exemption from the requirement of a tolerance for residues of potassium acetate (CAS Reg. No. 127–08–2), when used as an inert ingredient (nutrient) in pesticide formulations under 40 CFR 180.920. The petitioner believes no analytical method is needed because it is not required for an exemption from the requirement of a tolerance. *Contact:* RD

New Tolerance for Non-Inerts

1. *PP 0E8832.* (EPA–HQ–OPP–2020–0347). The Interregional Research Project #4 (IR–4), Rutgers, The State University of New Jersey, 500 College Road East, Suite 201W, Princeton, NJ 08540, requests to establish a tolerance in 40 CFR 180.499 for residues of the fungicide propamocarb, propyl *N*-[3-(dimethylamino)propyl]carbamate, in or on vegetable, *Brassica,* head and stem, group 5–16 at 15 parts per million (ppm). An adequate gas chromatography/nitrogen-phosphorus detection (GC/NPD) method is available for enforcing the proposed tolerance. *Contact:* RD

2. *PP 0E8834.* EPA–HQ–OPP–2020–0345. American Spice Trade Association, Inc., 1101 17th St. NW, Suite 700, Washington, DC 20036, requests to establish a tolerance in 40 CFR part 180 for residues of the fungicide, difenoconazole, in or on pepper, black at 0.1 ppm. Liquid chromatography (LC)/mass spectrometry (MS)/(MS) is used to measure and evaluate the chemical difenoconazole (1 [2-[2-chloro-4-(4-chlorophenoxy)]phenyl-4-methyl-1,3-dioxolan-2-ylmethyl]-1H–1,2,4,-triazole). *Contact:* RD.

3. *PP 9E8792.* EPA–HQ–OPP–2020–0038. Bayer CropScience, 800 N. Lindbergh Blvd., St. Louis, MO 63141, requests to establish import tolerances in 40 CFR part 180 for residues of the fungicide trifloxystrobin in or on the raw agricultural commodities: Caneberry, cop Subgroup 13–07A at 3.0 ppm; Currant, black and red, at 4.0 ppm; edible-podded legume vegetables, crop subgroup 6A, at 1.5 ppm; oil, olive, refined at 0.5 ppm; pea, dry, seed at 0.2 ppm; succulent shelled pea and bean, crop subgroup 6B at 0.15 ppm; and tropical and subtropical, small fruit, edible peel, crop subgroup 23A at 0.2 ppm. The analytical methodology column liquid chromatography-mass spectrometry-mass spectrometry (LC/MS–MS) with an electro spray interface, operated in the positive ion mode is used to measure and evaluate the chemical trifloxystrobin (benzeneacetic acid, (E,E)-α-(methoxyimino)-2-[[[[1-[3-(trifluoromethyl) phenyl]ethylidene]amino]oxy]methyl]-methyl ester) and the free form of its acid metabolite CGA–321113 ((E,E)-methoxyimino-[2-[1-(3- trifluoromethyl-phenyl)-ethylideneaminooxymethyl]-phenyl]acetic acid)]. *Contact:* RD.

4. *PP* 9F8815. EPA–HQ–OPP–2020–0226. Nichino America, Inc., 4550 Linden Hill Rd., Suite 501, Wilmington, DE 19808, requests to establish tolerance in 40 CFR part 180 for residues of the fungicide pyraziflumid; *N*-(3′,4′-difluoro[1,1′-biphenyl]-2-yl)-3-(trifluoromethyl)-2-pyrazinecarboxamide in or on the following raw agricultural commodities: almond hulls at 5 parts per million (ppm); apple wet pomace at 0.6 ppm; bushberry (crop subgroup 13–07B) at 7.0 ppm; caneberry (crop subgroup 13–07A) at 4.0 ppm; cattle, fat at 0.01 ppm; cattle, meat at 0.01 ppm; cattle, meat byproducts at 0.01 ppm; goat, fat at 0.01 ppm; goat, meat byproducts at 0.01 ppm; goat, meat at 0.01 ppm; horse, fat at 0.01 ppm; horse, meat byproducts at 0.01 ppm; horse, meat at 0.01 ppm; milk at 0.01 ppm; pome fruit (crop group 11–10) at 0.4 ppm; raisins at 1.6 ppm; sheep, fat at 0.01 ppm; sheep meat at 0.01 ppm; sheep, meat byproducts at 0.01 ppm; small fruit vine climbing subgroup, except fuzzy kiwifruit (crop subgroup 13–07F) at 1.5 ppm; stone fruit (crop group 12–12) at 2.0 ppm; and tree nuts (crop group 14–12) at 0.03 ppm. The independent validation method of HPLC–MS/MS was used for the analysis of pyraziflumid and the metabolite BC–01 in raw agricultural commodities (RAC) and processed commodities (PC) to measure and evaluate the chemical pyraziflumid. *Contact:* RD.

5. *PP* 9F8818. (EPA–HQ–OPP–2020–0202). BASF Corporation, 26 Davis Drive, Research Triangle Park, NC 27709, requests to establish tolerances in 40 CFR part 180 for residues of the herbicide, isoxaflutole, in or on cottonseed at 0.02 ppm and cotton gin byproducts at 0.02 ppm. Tandem mass spectrometry (LC/MS/MS) is used to measure and evaluate the chemical isoxaflutole. *Contact:* RD.

Authority: 21 U.S.C. 346a.

Dated: August 25, 2020.

Hamaad Syed,

Acting Director, Information Technology and Resources Management Division, Office of Pesticide Programs.

[FR Doc. 2020–18958 Filed 9–9–20; 8:45 am]

BILLING CODE 6560–50–P

Notices

Federal Register

Vol. 85, No. 176

Thursday, September 10, 2020

This section of the FEDERAL REGISTER contains documents other than rules or proposed rules that are applicable to the public. Notices of hearings and investigations, committee meetings, agency decisions and rulings, delegations of authority, filing of petitions and applications and agency statements of organization and functions are examples of documents appearing in this section.

DEPARTMENT OF AGRICULTURE

Office of the Secretary

Fiscal Year 2020 Raw Cane Sugar Tariff-Rate Quota Increase and Extension of Entry Period

AGENCY: Office of the Secretary, Agriculture Department (USDA).

ACTION: Notice.

SUMMARY: The Office of the Secretary of the U.S. Department of Agriculture (the Secretary) is providing notice of an increase in the fiscal year (FY) 2020 raw cane sugar tariff-rate quota (TRQ) of 90,718 metric tons raw value (MTRV) and an extension of the TRQ entry period.

DATES: The TRQ increase and extension of entry period go into effect September 10, 2020.

ADDRESSES: Multilateral Affairs Division, Trade Policy and Geographic Affairs, Foreign Agricultural Service, U.S. Department of Agriculture, Stop 1070, 1400 Independence Avenue SW, Washington, DC 20250–1070.

FOR FURTHER INFORMATION CONTACT: Souleymane Diaby, (202) 720–2916, *Souleymane.Diaby@usda.gov.*

SUPPLEMENTARY INFORMATION: On June 27, 2019, the Secretary established the FY 2020 TRQ for raw cane sugar at 1,117,195 MTRV, the minimum to which the United States is committed under the World Trade Organization (WTO) Uruguay Round Agreements. Pursuant to Additional U.S. Note 5 to Chapter 17 of the U.S. Harmonized Tariff Schedule (HTS) and Section 359k of the Agricultural Adjustment Act of 1938, as amended, the Secretary has authority to modify the raw and refined sugar WTO TRQs. On April 3, 2020, the Secretary increased the FY 2020 TRQ for raw sugar by 317,515 MTRV. The Secretary gives notice today of an increase in the quantity of raw cane sugar eligible to enter at the lower rate of duty during FY 2020 by 90,718 MTRV. The conversion factor is 1 metric ton raw value equals 1.10231125 short tons raw value. With this increase, the overall FY 2020 raw sugar TRQ is now 1,525,428 MTRV. Raw cane sugar under this quota must be accompanied by a certificate for quota eligibility. The Office of the U.S. Trade Representative (USTR) will allocate this increase among supplying countries and customs areas.

The Secretary also today announces that all sugar entering the United States under the FY 2020 raw sugar TRQ will be permitted to enter U.S. Customs territory through October 31, 2020, a month later than the usual last entry date. Additional U.S. Note 5(a)(iv) of Chapter 17 of the Harmonized Tariff Schedule of the United States provides: ''(iv) Sugar entering the United States during a quota period established under this note may be charged to the previous or subsequent quota period with the written approval of the Secretary.''

These actions are being taken after a determination that additional supplies of raw cane sugar are required in the U.S. market. USDA will closely monitor stocks, consumption, imports and all sugar market and program variables on an ongoing basis and may make further program adjustments during FY 2020 if needed.

Ted A. McKinney,

Under Secretary, Trade and Foreign Agricultural Affairs.

[FR Doc. 2020–20065 Filed 9–8–20; 4:15 pm]

BILLING CODE 3410–10–P

DEPARTMENT OF AGRICULTURE

Office of the Secretary

[Docket No. USDA–2020–0008]

Innovative Technologies and Practices for the Agriculture Innovation Agenda

AGENCY: Office of the Secretary, Agriculture (USDA).

ACTION: Request for written stakeholder input.

SUMMARY: The United States Department of Agriculture (USDA) is requesting comments and suggestions on the most innovative technologies and practices that can be readily deployed across U.S. agriculture to meet USDA's goal of increasing agricultural production by 40 percent to meet the needs of the global population in 2050 while cutting the environmental footprint of U.S. agriculture in half. This effort is a part of USDA's Agriculture Innovation Agenda (AIA), USDA's commitment to the continued success of American farmers, ranchers, foresters, and producers in the face of current and future challenges. *Note:* Technologies and practices that have potential to address these AIA goals, but that need substantial development or research before deployment, were captured in the recent USDA request for written stakeholder input published in the **Federal Register** on April 1, 2020, and open for comment until August 1st, 2020.

DATES: We will consider comments that we receive by November 9, 2020. Comments received after that date will be considered to the extent practicable.

ADDRESSES: We invite you to submit comments on this notice. You may submit comments by either of the following methods:

- *Federal Rulemaking Portal:* Go to *https://www.regulations.gov/docket?D=USDA-2020-0003* and follow the instructions for submitting comments.
- *Mail:* Diane Gelburd, Ph.D.; Deputy Chief for Science and Technology, USDA Natural Resources Conservation Service; Room 5113, South Building, 1400 Independence Avenue SW, Washington, DC 20250. In your comment, specify the docket ID USDA–2020–0008.

Comments will be available for viewing online at *www.regulations.gov.* Comments received will be posted without change, including any personal information provided. In addition, comments will be available for public inspection at the above address during business hours from 8 a.m. to 5 p.m., Monday through Friday, except holidays.

FOR FURTHER INFORMATION CONTACT: Diane Gelburd; (202) 720–4527; or email *diane.gelburd@usda.gov.*

SUPPLEMENTARY INFORMATION: The United States Department of Agriculture (USDA) recognizes that there have been dramatic advances in agricultural production efficiency and conservation performance over the past two decades. As part of the Agriculture Innovation Agenda (AIA), to assist farmers in

accessing and adopting new approaches, USDA requests input on the most innovative technologies, practices, and management tools that can be readily deployed through one or more USDA programs. Recommended approaches should enable the U.S. agriculture industry to meet USDA's goal to increase agricultural production by 40 percent to meet the needs of the global population in 2050 while cutting the environmental footprint of U.S. agriculture in half.

USDA implements a range of programs including, but not limited to:

- Farm Service Agency programs (for example, the Conservation Reserve Program);
- Natural Resources and Conservation Service programs (for example, the Environmental Quality Incentives Program);
- Risk Management Agency crop insurance programs; and
- Rural Development community infrastructure and energy programs.

Each of these programs are well positioned to leverage ''ready to go'' technologies, practices, and management approaches to benefit farmers, consumers, and the environment in support of the AIA goals.

Through this notice, USDA's goal is to identify the best ''ready to go'' innovations, as well as request input on how to best incorporate these innovations into USDA programs and accelerate their adoption. Input is requested from a range of stakeholders including, but not limited to: Private sector, not for profits, farmers, forest sector, trade associations, commodity boards, and others involved in the supply chain or development of widely applicable practices, management approaches, or technologies (for example, robotics, applications and end use tools, in-field management activities). For the purpose of this notice, ''ready to go'' means a practice, technology, or management approach that is fully developed, has been field tested, has completed independent research trials, is publicly available, and end-user accessible. Submissions will be most helpful if they include reference citations or website links to research, on-farm trials, end-user group evaluation or other supporting documentation that the product is ''ready to go'' and has already been reviewed by the scientific or other appropriate community.

To aid in submission of comments, we request responses to the following questions on the types of innovative technologies, practices, and management approaches that USDA may want to consider for integration and deployment in USDA programs, as well as the best ways to integrate these into program delivery. For the purpose of this notice, ''innovation'' means any idea, practice, or object that is perceived as new or generally has low adoption, and when judged as a whole has the following characteristics: [1]

- A relative advantage (efficiencies gained by the innovation relative to current tools or procedures),
- Is compatible with the pre-existing system,
- Can or has been be trialed or tested,
- Produces observed effects or is effective,
- Has potential for reinvention (that is, using the tool for initially unintended purpose), or
- May be complex or difficult to learn.

When providing responses to this notice, please provide the following information where they apply:

1. What is the innovation, how does it meet the AIA goals, and how could it demonstrate significant gains in agricultural productivity, significant reductions in U.S. agriculture's environmental footprint, or both?

2. How does the innovation target one or more of the following areas?

- *Agricultural Productivity:* Increase agricultural production by 40 percent by 2050 to meet estimated future demand.
- *Food Loss and Waste:* Advance our work toward the United States' goal to reduce food loss and waste by 50 percent in the United States by the year 2030, from the 2010 baseline.
- *Carbon Sequestration and Greenhouse Gases:* Enhance carbon sequestration through soil health (that is, terrestrial sequestration) and forestry, leverage the agricultural sector's renewable energy benefits for the economy, and capitalize on innovative technologies and practices to achieve net reduction of the agricultural sector's current carbon footprint by 2050.
- *Water Quality:* Reduce nutrient loss by 30 percent nationally by 2050.
- *Renewable Energy:* Increase the production of renewable energy feedstocks and increase biofuel production efficiency and competitiveness to achieve market-driven blend rates of 15 percent of transportation fuels in 2030 and 30 percent of transportation fuels by 2050.

3. How ''ready to go'' and adoptable is the innovation based on the following?

- *Relative Advantage.* The degree to which an innovation is seen as better than the idea, program, or product it replaces for increasing agricultural productivity or decreasing agriculture's environmental footprint, in either efficiency or effectiveness.
- *Compatibility:* How consistent the innovation is with the values, experiences, and needs of the potential adopters.
- *Complexity:* How difficult the innovation is to understand, use, or both.
- *Transferability:* The extent to which the innovation can be adopted or can be easily made adoptable.
- *Observability.* The extent to which the innovation provides tangible results.

4. If you are familiar with USDA programs, which USDA program(s) could the innovation be deployed through and how could it be reasonably integrated into that program in a way that will move the agricultural industry beyond its current state?

5. How could USDA support the deployment and adoption of the innovation in the field and what barriers to adoption do you think USDA can help overcome?

6. Are there specific ways that USDA programs are inadvertently hindering adoption of innovative technologies and, if so, how can USDA alleviate those barriers?

7. If you are presently working with USDA on this innovation, how is USDA already supporting its deployment and adoption?

Stakeholder input will inform USDA as it works to develop and execute a comprehensive ''ready to go'' technology strategy, including rapid deployment of the top technologies, practices, and management approaches that will enable U.S. farmers, ranchers, and natural resource managers to help meet global food, fiber, fuel, feed, and environmental demands.

Note: Technologies and practices that have potential to address these AIA goals, but need substantial development or research before deployment, should have been captured in the recent USDA request for written stakeholder input, titled ''Solicitation of Input From Stakeholders on Agricultural Innovations,'' which was published in the **Federal Register** on April 1, 2020 (85 FR 18185) (*https://www.regulations.gov/docket?D=USDA-2020-0003*). Comments to that request were due on August 1, 2020.

Stephen Censky,

Deputy Secretary, U.S. Department of Agriculture.

[FR Doc. 2020–20020 Filed 9–9–20; 8:45 am]

BILLING CODE 3410–90–P

[1] This list of characteristics was Adapted from Rogers, E.M. (1962). Diffusion of Innovation Theory.

DEPARTMENT OF AGRICULTURE

Animal and Plant Health Inspection Service

[Docket No. APHIS–2020–0081]

Joint Environmental Impact Report and Environmental Impact Statement for Wildlife Damage Management in California

AGENCY: Animal and Plant Health Inspection Service, Agriculture (USDA).

ACTION: Notice of intent to prepare an environmental impact statement and proposed scope of study.

SUMMARY: We are advising the public that the Animal and Plant Health Inspection Service, working in coordination with the California Department of Food and Agriculture, intends to prepare a joint environmental impact report (EIR) and environmental impact statement (EIS) analyzing alternatives for wildlife damage management in California in accordance with the California Environmental Quality Act and the National Environmental Policy Act. This notice proposes issues and alternatives for consideration in the joint EIR/EIS and requests public comments to further delineate the scope of the alternatives, environmental issues, and other issues of public concern to be considered in the EIR/EIS.

DATES: Two virtual public scoping meetings will be held on October 13, 2020, 5:30 p.m. to 8:30 p.m. PST, and October 27, 2020, 5:30 p.m. to 8:30 p.m. PST. We will consider all comments that we receive on or before November 10, 2020.

ADDRESSES: You may submit comments by any of the following methods:

- *California Wildlife Damage Management EIR/EIS web page:* Go to *www.CaliforniaWDM.org.*
- *Electronic Mail:* Send electronic mail (email) to *comments@CaliforniaWDM.org.*
- At the virtual scoping meetings on October 13 and 27, 2020. Details for participation can be found at *www.CaliforniaWDM.org.*
- *Postal Mail/Commercial Delivery:* Send your comment to California Wildlife Damage Management EIR/EIS, ATTN: Scoping Comments, 2121 Broadway, P.O. Box 188797, Sacramento, CA 95818.

Supporting documents and any comments received on this topic may be viewed at *www.CaliforniaWDM.org.*

FOR FURTHER INFORMATION CONTACT: Mr. Dennis Orthmeyer, USDA–APHIS-Wildlife Services, 3419–A Arden Way, Sacramento, CA 95825; (916) 979–2675; *Dennis.L.Orthmeyer@usda.gov.* Further information is also available on the California Wildlife Damage Management EIR/EIS web page (see **ADDRESSES** above).

SUPPLEMENTARY INFORMATION:

Background

California wildlife provides many positive ecological, cultural, economic, and aesthetic benefits. However, some wildlife species are involved in conflicts with humans, including damaging agricultural resources and property, preying upon or harassing livestock, damaging infrastructure, and threatening human health and safety. In certain instances, wildlife species may impede efforts by wildlife management agencies to protect and enhance natural resources. Wildlife may also prey upon populations of threatened or endangered species or damage habitat restoration efforts.

The Animal and Plant Health Inspection Service (APHIS) Wildlife Services' California office (WS-California) provides Federal leadership and expertise in managing wildlife conflicts in California to allow people and wildlife to coexist. WS-California currently uses an integrated approach to recommend and apply a range of legally available nonlethal and lethal techniques for reducing wildlife damage and conflicts. WS-California works to resolve bird and mammal conflicts with agriculture, infrastructure, property, airport operations, and threatened and endangered species protection. WS-California also works to reduce conflicts with wildlife that threaten human health and safety.

WS-California currently provides advice on wildlife damage prevention and management, information on sources of wildlife damage management materials, depredation investigations, training on the use of damage management methods, and technical assistance. WS-California also assists with implementation of wildlife damage management methods. WS-California receives requests for assistance from the public, private entities, other agencies and governmental bodies, and Native American Tribes.

WS-California's wildlife damage management activities are authorized and coordinated pursuant to Federal law (the Acts of March 2, 1931 (7 U.S.C. 8351–8352), as amended, and December 22, 1987 (7 U.S.C. 8353)), as well as memoranda of understanding and agreements with various Federal, State, Tribal, and local agencies and other governmental bodies. WS-California conducts its actions in accordance with applicable Federal, State, local, and Tribal laws, regulations, species management plans, and land management plans.

WS-California has entered into a memorandum of understanding (MOU) with the California Department of Food and Agriculture (CDFA) to develop a joint environmental review of both agencies' roles in wildlife damage management in California.

Proposed Action

WS-California and CDFA are cooperating as joint lead agencies to prepare an environmental impact report and environmental impact statement (EIR/EIS) evaluating alternatives for both agencies' involvement in managing wildlife damage and conflict in California. WS-California will serve as the lead agency for the EIS portion of the joint analysis. CDFA will serve as the lead agency for the EIR portion of the joint analysis. This EIR/EIS is being developed in accordance with the California Environmental Quality Act (California Public Resources Code 21000 *et seq.,* CEQA) and the National Environmental Policy Act (42 U.S.C. 4321 *et seq.,* NEPA). In the EIS portion of the combined report, WS-California intends to evaluate the environmental impacts of managing wildlife damage and threats to agricultural resources, property, natural resources, and human health and safety.

The scope of the analysis will include WS-California's cooperative activities with Federal and State agencies, California counties, Tribes, and local municipalities managing human-wildlife conflicts caused by birds and mammals. Cooperative activities may include:

- Reducing damage to agricultural resources;
- Reducing damage to infrastructure and property;
- Reducing wildlife strike hazards at airports;
- Managing damage by invasive species;
- Reducing threats to human health and safety associated with wildlife; and
- Protecting threatened and endangered species.

Once completed, the EIR/EIS will replace all of WS-California's district level environmental assessments on wildlife damage management in California.

Scoping

This notice opens a public scoping period for the EIR/EIS. Please review the information in this notice and the supplemental information, which may

be viewed on the California Wildlife Damage Management EIR/EIS web page (see **ADDRESSES** above). Copies of supplemental information may be requested from WS-California (see **FOR FURTHER INFORMATION CONTACT** above). You can also register online to receive notices regarding this project at: *https://public.govdelivery.com/accounts/USDAAPHIS/subscriber/new.*

WS-California is particularly interested in receiving comments regarding biological, cultural, or ecological issues that the analysis should address (see Environmental Issues for Consideration in the EIR/EIS Analysis below). We also encourage comments that assist us in further delineating the scope of alternatives, environmental impacts, and other issues of public concern. To promote informed decision-making, we especially encourage commenters to submit any scientific data, studies, or research that you feel is relevant to the analysis. Comments may be submitted electronically or by mail (see instructions in **ADDRESSES** above) on or before November 10, 2020.

To facilitate public and agency involvement in the EIR/EIS process, we will hold two public meetings during the scoping period on October 13 and October 27, 2020 (see DATES above). Due to current local and State orders concerning COVID–19, the meetings will be virtual in format. The scoping meetings will solicit input from the public and interested public agencies regarding the scope of environmental impacts to be addressed in the draft EIR/EIS.

Further information concerning the scoping process, including links to attend the virtual scoping meetings, can be obtained through the California Wildlife Damage Management EIR/EIS web page (see **ADDRESSES** above), or by contacting WS-California (see **FOR FURTHER INFORMATION CONTACT** above).

Alternatives

The EIS will consider a range of reasonable alternatives:

- An alternative that continues WS-California's current wildlife damage and conflict management activities (the no action alternative);
- Alternatives with restrictions on integrated wildlife damage management to reduce environmental impacts (*e.g.,* no use of toxicants);
- Alternatives that require varying levels of nonlethal wildlife damage management; and
- No WS-California involvement alternative.

Additional alternatives may be identified through the public scoping process.

Environmental Issues for Consideration in the EIR/EIS Analysis

The primary purpose of the EIR/EIS is to analyze and disclose environmental impacts of wildlife damage management activities conducted throughout the State of California by WS-California, CDFA, and California counties. WS-California, CDFA, and the cooperating agencies have identified the following preliminary issues that will drive the analysis of the alternatives in the EIS. The public is encouraged to submit comments on these or other issues that should be considered:

- Impacts on wildlife populations;
- Effects on nontarget animal populations including species federally listed under the Endangered Species Act (61 U.S.C. 1531 *et seq.*);
- Impacts on ecosystem processes (*e.g.,* trophic cascades);
- Impacts on Special Management Areas, including Wilderness and Wilderness Study Areas;
- Humaneness of methods;
- Impacts of the alternatives on Native American culture and resource uses; and
- Risks and benefits to human and pet safety.

More information on CEQA-specific issues considered in the EIR portion of the analysis can be found in CDFA's Notice of Preparation available on the California Wildlife Damage Management EIR/EIS web page (see **ADDRESSES** above). After the comment period closes, WS-California and CDFA will review and consider all comments received during the comment period any other relevant information when developing the draft EIR/EIS. Upon completion of the draft EIS/EIR, a document announcing its availability and an opportunity to comment will be published in the **Federal Register**.

Done in Washington, DC, this 24th day of August 2020.

Mark Davidson,

Administrator, Animal and Plant Health Inspection Service.

[FR Doc. 2020–19090 Filed 9–9–20; 8:45 am]

BILLING CODE 3410–34–P

DEPARTMENT OF AGRICULTURE

Forest Service

Fishlake National Forest; Utah; Southern Monroe Mountain Allotments Livestock Grazing Authorization

AGENCY: Forest Service, Agriculture (USDA).

ACTION: Notice of intent to prepare an environmental impact statement.

SUMMARY: The Forest Service will prepare an environmental impact statement (EIS) to disclose the environmental impacts of proposed land management activities and corresponding alternatives within the Southern Monroe Mountain Allotments Livestock Grazing Authorization project area. The project is located on National Forest System lands, administered by the Richfield Ranger District, south of Richfield, Utah. These six allotments are in Sevier and Piute Counties and cover multiple sections in Ranges 1, 2, 2.5, and 3 West and in Townships 26, 27, 28, and 29 South.

DATES: Comments concerning the scope of the analysis must be received by October 26, 2020. The draft environmental impact statement is expected June 2021 and the final environmental impact statement is expected February 2022.

ADDRESSES: Send written comments to: Mike Elson, Attention: Southern Monroe Mountain Allotments Livestock Grazing Authorization, Fishlake National Forest, 115 East 900 North, Richfield, Utah 84701. Comments may also be sent via email to *comments-intermtn-fishlake-richfield@usda.gov,* or via facsimile to 435–896–9347.

FOR FURTHER INFORMATION CONTACT: Jason Kling, Richfield District Ranger, 115 East 900 North, Richfield, Utah 84701, by phone at phone 435–896–9233 or email at *jason.kling@usda.gov.*

Individuals who use telecommunication devices for the deaf (TDD) may call the Federal Information Relay Service (FIRS) at 1–800–877–8339 between 8 a.m. and 8 p.m., Eastern Time, Monday through Friday.

SUPPLEMENTARY INFORMATION: The purpose of the Southern Monroe Mountain Allotments Livestock Grazing Authorization is to implement land management activities that are consistent with direction in the Fishlake National Forest Land and Resource Management Plan (Forest Plan) and respond to specific needs identified in the project area. The project-specific needs include the consideration of livestock grazing to be authorized on the Dry Lake, Forshea, Kingston, Koosharem, Manning Creek, and Rock Springs Allotments and managed in a manner that allows for healthy, resilient, and sustainable vegetation. The information presented in this notice was included to help the reviewer determine if they are interested in or potentially affected by the proposed land management activities. The

information presented in this notice is summarized. Those who wish to provide comments, or are otherwise interested in or affected by the project, are encouraged to obtain additional information from the contact identified in the **FOR FURTHER INFORMATION CONTACT** section. Additionally, project detailed information, including maps may be found on the web at: *www.fs.usda.gov/goto/fishlake/projects.*

Purpose and Need for Action

In accordance with the Forest Plan, the purpose of this action is to consider and authorize livestock grazing opportunities on the Dry Lake, Forshea, Kingston, Koosharem, Manning Creek, and Rock Springs Allotments. For more information regarding the Purpose and Need for Action refer to the website in the Supplementary Information section.

Proposed Action

This proposed action for the Southern Monroe Mountain Allotments Livestock Grazing Authorization consists of five components: Authorization, improvements, monitoring, adaptive management, and management practices.

The Richfield Ranger District, Fishlake National Forest, proposes to authorize grazing in a manner that is consistent with Forest Plan standards, guidelines, and objectives and maintains or improves natural resource conditions.

Livestock grazing would be authorized on the Dry Lake, Forshea, Kingston, Koosharem, Manning Creek, and Rock Springs allotments. For more information regarding the Proposed Action refer to the website in the Supplementary Information section.

Responsible Official

The Fishlake Forest Supervisor, Mike Elson, is the Responsible Official making project-level decisions.

Nature of Decision To Be Made

Decision-making will be limited to specific activities relating to the proposed action. The primary decision to be made will be whether or not to implement the proposed action or another alternative that responds to the project's purpose and need.

Scoping Process

This notice of intent initiates the scoping process, which guides the development of the environmental impact statement. Additionally, separate meetings will be held with permittees, state and county officials, and known interested stakeholders.

It is important that reviewers provide their comments at such times and in such manner that they are useful to the agency's preparation of the environmental impact statement. Therefore, comments should be provided prior to the close of the comment period and should clearly articulate the reviewer's concerns and contentions.

Comments received in response to this solicitation, including names and addresses of those who comment, will be part of the public record for this proposed action. Comments submitted anonymously will be accepted and considered as well; however, those who participate in the comment process anonymously will not have standing to object.

Jacqueline Emanuel,

Acting Associate Deputy Chief, National Forest System.

[FR Doc. 2020–19955 Filed 9–9–20; 8:45 am]

BILLING CODE 3411–15–P

COMMISSION ON CIVIL RIGHTS

Notice of Public Meeting of the Ohio Advisory Committee; Correction

AGENCY: Commission on Civil Rights.

ACTION: Notice; revision to meeting date.

SUMMARY: The Commission on Civil Rights published a notice in the **Federal Register** of Friday, August 28, 2020, concerning a meeting of the Ohio Advisory Committee. The document contained a date that is now changed to a new date.

FOR FURTHER INFORMATION CONTACT: Carolyn Allen, (202) 602–2375, *callen@usccr.gov.*

SUPPLEMENTARY INFORMATION:

Correction

In the **Federal Register** of Friday, August 28, 2020, in FR Doc. 2020–19074, on page 53792, second column of 53792, correct one of the Thursday, October 22, 2020 dates to read: Thursday, October 29, 2020 at 12:00 p.m. (EST).

Dated: August 31, 2020.

David Mussatt,

Supervisory Chief, Regional Programs Unit.

[FR Doc. 2020–19593 Filed 9–9–20; 8:45 am]

BILLING CODE P

COMMISSION ON CIVIL RIGHTS

Notice of Public Meeting of the Illinois Advisory Committee

AGENCY: U.S. Commission on Civil Rights.

ACTION: Announcement of meeting.

SUMMARY: Notice is hereby given, pursuant to the provisions of the rules and regulations of the U.S. Commission on Civil Rights and the Federal Advisory Committee Act that the Illinois Advisory Committee (Committee) will hold a meeting via teleconference on Tuesday, September 22, 2020 at 12:00 p.m. Central Time, the purpose of the meeting is to review the draft report on Fair Housing in Illinois.

DATES: The meeting will be held on Tuesday, September 22, 2020 at 12:00 p.m. Central Time.

Public Call Information: Dial:1–866–248–8441, Conference ID: 6134434.

FOR FURTHER INFORMATION CONTACT: David Barreras, Designated Federal Official, at *dbarreras@usccr.gov* or 202–499–4066.

SUPPLEMENTARY INFORMATION: Members of the public may listen to the discussion. This meeting is available to the public through the call in information listed above. Any interested member of the public may call this number and listen to the meeting. An open comment period will be provided to allow members of the public to make a statement to the Committee as time allows. The conference call operator will ask callers to identify themselves, the organization they are affiliated with (if any), and an email address prior to placing callers into the conference room. Callers can expect to incur regular charges for calls they initiate over wireless lines, according to their wireless plan. The Commission will not refund any incurred charges. Callers will incur no charge for calls they initiate over land-line connections to the toll-free telephone number. Persons with hearing impairments may also follow the proceedings by first calling the Federal Relay Service at 1–800–877–8339 and providing the Service with the conference call number and conference ID number.

Members of the public are also entitled to submit written comments; the comments must be received in the regional office within 30 days following the meeting. Written comments may be emailed to Carolyn Allen at *callen@usccr.gov* in the Regional Program Unit Office/Advisory Committee Management Unit. Persons who desire additional information may contact the Regional Program Unit at 202–499–4066.

Records generated from this meeting may be inspected and reproduced at the Chicago office, as they become available, both before and after the meeting. Records of the meeting will be

available via *https://www.facadatabase.gov/FACA/FACAPublicViewCommitteeDetails?id=a10t0000001gzlZAAQ* under the Commission on Civil Rights, Illinois Advisory Committee link. Persons interested in the work of this Committee are directed to the Commission's website, *http://www.usccr.gov,* or may contact the Chicago Office at the above email or phone number.

Agenda

I. Welcome and Roll Call
II. Discussion of draft report on Fair Housing in Illinois
III. Public Comment
IV. Adjournment

Dated: September 4, 2020.

David Mussatt,

Supervisory Chief, Regional Programs Unit.

[FR Doc. 2020–19974 Filed 9–9–20; 8:45 am]

BILLING CODE P

COMMISSION ON CIVIL RIGHTS

Agenda and Notice of Public Meeting of the Colorado Advisory Committee

AGENCY: Commission on Civil Rights.

ACTION: Announcement of meeting.

SUMMARY: Notice is hereby given, pursuant to the provisions of the rules and regulations of the U.S. Commission on Civil Rights (Commission), and the Federal Advisory Committee Act (FACA) that a meeting of the Colorado Advisory Committee to the Commission will convene by conference call on Tuesday, September 22, 2020 at 12:30 p.m. The purpose of the meeting is to review an advisory memorandum regarding infant and maternal mortality.

DATES: Tuesday, September 22, 2020 at 12:30 p.m. (MDT).

Public Call-In Information: 1–800–353–6461; Conference ID: 3778939.

FOR FURTHER INFORMATION CONTACT: Barbara Delaviez, *ero@usccr.gov* or by phone at 202–539–8246.

SUPPLEMENTARY INFORMATION: Interested members of the public may listen to the discussion by calling the following toll-free conference call number: 1–800–353–6461; Conference ID: 3778939.

Please be advised that, before being placed into the conference call, the conference call operator will ask callers to provide their names, their organizational affiliations (if any), and email addresses (so that callers may be notified of future meetings). Callers can expect to incur charges for calls they initiate over wireless lines, and the Commission will not refund any incurred charges. Callers will incur no charge for calls they initiate over land-line connections to the toll-free telephone number provided.

Persons with hearing impairments may also follow the discussion by first calling the Federal Relay Service at 1–800–877–8339 and providing the operator with the toll-free conference call number: 1–800–353–6461; Conference ID: 3778939.

Members of the public are invited to make statements during the open comment period of the meeting or email written comments. Written comments may be emailed to Barbara Delaviez at *ero@usccr.gov* approximately 30 days after each scheduled meeting. Persons who desire additional information may also contact Barbara Delaviez at (202) 539–8246.

Records and documents discussed during the meeting will be available for public viewing as they become available at this FACA Link; click the ''Meeting Details'' and ''Documents'' links. Persons interested in the work of this advisory committee are advised to go to the Commission's website, *www.usccr.gov,* or to contact Evelyn Bohor at the above phone number or email address.

Agenda

Tuesday, September 22, 2020 at 12:30 p.m. (MDT)

I. Roll Call
II. Review Advisory Memorandum Regarding Infant and Maternal Mortality
III. Next Steps
IV. Other Business
V. Open Comment
VI. Adjournment

Dated: September 4, 2020.

David Mussatt,

Supervisory Chief, Regional Programs Unit.

[FR Doc. 2020–19975 Filed 9–9–20; 8:45 am]

BILLING CODE P

COMMISSION ON CIVIL RIGHTS

Notice of Public Meeting of the Massachusetts Advisory Committee

AGENCY: Commission on Civil Rights.

ACTION: Announcement of meeting.

SUMMARY: Notice is hereby given, pursuant to the provisions of the rules and regulations of the U.S. Commission on Civil Rights (Commission) and the Federal Advisory Committee Act (FACA) that a meeting of the Massachusetts Advisory Committee to the Commission will convene by conference call on Thursday, September 24, 2020 at 12:30 p.m. (EDT). The purpose of the meeting is to continue its work on water accessibility in Massachusetts.

DATES: Thursday, September 24, 2020 at 12:30 p.m. (EDT).

ADDRESSES:

Public Call-In Information: 1–800–353–6461; conference ID: 7139515.

FOR FURTHER INFORMATION CONTACT: Evelyn Bohor at *ero@usccr.gov* or by phone at 202–376–7533.

SUPPLEMENTARY INFORMATION: Interested members of the public may listen to the discussion by calling the following toll-free conference call-in numbers: 1–800–353–6461; conference ID: 7139515. Please be advised that before placing them into the conference call, the conference call operator will ask callers to provide their names, their organizational affiliations (if any), and email addresses (so that callers may be notified of future meetings). Callers can expect to incur charges for calls they initiate over wireless lines, and the Commission will not refund any incurred charges. Callers will incur no charge for calls they initiate over land-line connections to the toll-free conference call-in number.

Persons with hearing impairments may also follow the discussion by first calling the Federal Relay Service at 1–800–877–8339 and providing the operator with the toll-free conference call-in numbers: 1–800–353–6461; conference ID: 7139515.

Members of the public are invited to make statements during the open comment period of the meeting or submit written comments. The comments must be received in the regional office approximately 30 days after each scheduled meeting. Written comments may be emailed to Evelyn Bohor at *ero@usccr.gov.* Persons who desire additional information may contact the Eastern Regional Office at (202) 376–7533.

Records and documents discussed during the meeting will be available for public viewing as they become available at this FACA link, click the ''Meeting Details'' and ''Documents'' links. Records generated from this meeting may also be inspected and reproduced at the Eastern Regional Office, as they become available, both before and after the meetings. Persons interested in the work of this advisory committee are advised to go to the Commission's website, *www.usccr.gov,* or to contact the Eastern Regional Office at the above phone numbers, email or street address.

Agenda

Thursday, September 24, 2020 at 12:30 p.m. (EDT)

1. Welcome and Open

2. Web Briefing on Water Project
3. Open Comment
4. Next Steps
5. Adjourn

Dated: September 4, 2020.

David Mussatt,

Supervisory Chief, Regional Programs Unit.

[FR Doc. 2020–19976 Filed 9–9–20; 8:45 am]

BILLING CODE P

DEPARTMENT OF COMMERCE

Census Bureau

Agency Information Collection Activities; Submission to the Office of Management and Budget (OMB) for Review and Approval; Comment Request; Annual Survey of Manufactures

AGENCY: Census Bureau, Commerce.

ACTION: Notice of information collection, request for comment.

SUMMARY: The Department of Commerce, in accordance with the Paperwork Reduction Act (PRA) of 1995, invites the general public and other Federal agencies to comment on proposed, and continuing information collections, which helps us assess the impact of our information collection requirements and minimize the public's reporting burden. The purpose of this notice is to allow for 60 days of public comment on the proposed revision of the Annual Survey of Manufactures, prior to the submission of the information collection request (ICR) to OMB for approval.

DATES: To ensure consideration, comments regarding this proposed information collection must be received on or before November 9, 2020.

ADDRESSES: Interested persons are invited to submit written comments by email to *Thomas.J.Smith@census.gov*. Please reference Annual Survey of Manufactures in the subject line of your comments. You may also submit comments, identified by Docket Number USBC–2020–0024, to the Federal e-Rulemaking Portal: *http://www.regulations.gov*. All comments received are part of the public record. No comments will be posted to *http://www.regulations.gov* for public viewing until after the comment period has closed. Comments will generally be posted without change. All Personally Identifiable Information (for example, name and address) voluntarily submitted by the commenter may be publicly accessible. Do not submit Confidential Business Information or otherwise sensitive or protected information. You may submit attachments to electronic comments in Microsoft Word, Excel, or Adobe PDF file formats.

FOR FURTHER INFORMATION CONTACT: Requests for additional information or specific questions related to collection activities should be directed to Marlo Thornton, Assistant Division Chief, Manufacturing, Mining, and Construction Sectors, Economy-Wide Statistics Division, U.S. Census Bureau, (301) 763–7170, or email *Marlo.N.Thornton@Census.gov*.

SUPPLEMENTARY INFORMATION:

I. Abstract

The Census Bureau has conducted the Annual Survey of Manufactures (ASM) since 1949 to provide key measures of manufacturing activity during intercensal periods. In economic census years ending in ''2'' and ''7'', we do not conduct the ASM. ASM estimates are key inputs for multiple federal statistical programs, including the Bureau of Economic Analysis' National Income and Product Accounts. The ASM furnishes up-to-date estimates of employment and payroll, hours and wages of production workers, value added by manufacture, cost of materials, value of shipments by the North American Product Classification System (NAPCS) product codes, inventories, and expenditures for both plant equipment and structures. The survey provides data at the two-through six-digit North American Industry Classification System (NAICS) levels. It also provides geographic data by state at a more aggregated industry level.

ASM estimates are key inputs for multiple federal statistical programs. Federal agencies use the annual survey's input and output data as benchmarks for their statistical programs, including the Federal Reserve Board's Index of Industrial Production and BEA's National Income and Product Accounts. The data also provide the Department of Energy with primary information on the use of energy by the manufacturing sector to produce manufactured products. These data also are used as benchmark data for the Manufacturing Energy Consumption Survey, which is conducted for the Department of Energy by the Census Bureau. Within the Census Bureau, the ASM data are used to benchmark and reconcile monthly and quarterly data on manufacturing production and inventories. The ASM is the only source of complete establishment statistics for the programs mentioned above. The survey also provides valuable information to private companies, research organizations, and trade associations. Industry makes extensive use of the annual figures on product class shipments at the U.S. level in market analyses, product planning, and investment planning. State development/planning agencies rely on the survey as a major source of comprehensive economic data for policymaking, planning, and administration. The Census Bureau plans to request a revision of a currently approved collection. We plan to make the following changes:

MA–10000—Multiple Establishment Companies and MA–10000—Single Establishment Companies:

A. *Content related to the Coronavirus Pandemic:*

1. *Item 28—Special Inquiry:*

Add a question asking respondents to provide the number of days their location was closed due to the coronavirus pandemic. This question will assist with measuring the impact on plant operations due to the Coronavirus Pandemic.

The primary objective of adding this and other questions related to the Coronavirus Pandemic described below is to measure the impact of the Coronavirus Pandemic on the manufacturing sector and manufacturing establishments, and meet the needs of the data user community. As we continue in these unprecedented times, the Coronavirus Pandemic content may shift, change or evolve and require further modifications on the ASM.

2. *Item 5 and Item 28—Special Inquiry:*

Add a statement to Item 5 to specify/clarify that donated products should be included in the value.

Add a question asking respondents if they donated products and the associated value of the donated products (breakout of Item 5, line A). Attempt to gather information on the value of shipments related to donated products by industry.

3. *Item 7:*

Add questions asking respondents to provide the payroll for production workers at the establishment by quarter. Collecting payroll information by range of months, rather than a point in time will reflect variability.

4. *Item 22:*

Add the following NAPCS to electronic instrument for all respondents:

a. 2017900000—Manufacturing of nonelectric breathing devices (including N95 and other respirators), incubators, inhalators, and resuscitators, and other surgical and medical apparatus and instruments, excluding anesthetic apparatus and parts.

b. 2018000000—Manufacturing of electromedical equipment (including diagnostic, therapeutic, patient monitoring equipment, and ventilators), excluding ionizing radiation equipment.

c. 2050375000—Manufacturing of personal safety equipment and clothing, industrial and nonindustrial, including respiratory protection, face shields, masks, and protective clothing, excluding footwear, gloves, and surgical and medical respirators.

d. 2045875000—Manufacturing of surgical appliances and supplies, including surgical gloves, bandages, gauze, cotton (sterile and non-sterile), and other surgical dressings, excluding orthopedic and prosthetic appliances.

e. 2010475000—Manufacturing of bath, facial, and hand soaps, including hand sanitizers.

f. 2007875000—Manufacturing of other household specialty cleaning and sanitation products, including disinfectants.

Industries have shifted to produce goods they normally do not produce. Adding the proposed NAPCS questions to all forms will assist with capturing a shift in production lines.

B. *Revisions related to integrating annual surveys:* The Census Bureau is undertaking an initiative to integrate and re-engineer select annual programs. Programs include the Annual Survey of Manufactures (ASM), Annual Retail Trade Survey (ARTS), Annual Wholesale Trade Survey (AWTS), Services Annual Survey (SAS), Annual Capital Expenditures Survey (ACES), Manufacturing Shipments Inventories and Unfilled Orders (M3UFO), and Company Organizational Survey (COS). Efforts include coordinating collection strategies/instruments/communication; integrating, changing or revising content; ensuring content is relevant; coordinating samples; and improving frame and coordinating status updates across annual surveys. The initiative to integrate and re-engineer select annual programs is scheduled to begin implementation in survey year 2023. The goal is to shift select annual programs from individual independent surveys to a streamlined integrated annual program. The new annual program will move from industry focused, individual surveys to requesting a more holistic view of the companies. Prior to survey year 2023, we plan to begin to align our annual programs and improve efficiencies across programs in targeted areas related to consistent content, processes, and systems. The initiative is in response to data user needs (timely, granular, harmonized data), and declining response rates.

C. *Item 7: Employment, Payroll, and Fringe Benefits:* Add content collecting four quarters of payroll for production workers to be consistent with employment (Item 7A). Revisions and adjustments will be made to the presentation/layout/content of employment and payroll questions to streamline and improve the flow.

D. *Item 5: Sales, Shipments, Receipts, or Revenue:* Remove Item 5B, market value of products shipped to other domestic plants of the company for further assembly, fabrication, or manufacture. This question is poorly reported and not utilized by data users.

II. Method of Collection

The ASM statistics are based on a survey of active manufacturing establishments in the U.S. with one or more paid employees. The frame and sample are redesigned every 5 years and are annually supplemented with new manufacturing establishments. The frame is created from the preceding Economic Census—Manufacturing and is divided into mail and nonmail components. The mail portion of the survey consists of a probability sample that was redesigned for the 2019 ASM using a methodology similar to the one that was used for the 2014 ASM. However, the industry strata for the 2019 ASM frame were based on the 2017 NAICS, which combines some of the six-digit codes in the Manufacturing Sector. The mail frame contained all manufacturing establishments of multiunit companies (companies with operations at more than one location) in the 2017 Economic Census plus the largest single-location manufacturing companies within each manufacturing industry. For the 2019 ASM, approximately 49,400 establishments were selected from a mail frame of approximately 102,500 manufacturing establishments. The 2019 ASM nonmail component contained the remaining single-location companies, approximately 186,700 establishments. No data are collected from establishments in the nonmail component. Rather, data are imputed based on models that incorporate the administrative records of the Internal Revenue Service (IRS), the Social Security Administration (SSA), and the Bureau of Labor Statistics (BLS). Though the nonmail establishments account for nearly two-thirds of the universe, they account for less than 6 percent of the manufacturing output.

III. Data

OMB Control Number: 0607–0449.

Form Number(s): MA–10000—Multiple Establishment Companies; MA–10000—Single Establishment Companies.

Type of Review: Regular submission, Request for a Revision of a Currently Approved Collection.

Affected Public: Business or Other for Profit, Non-profit Institutions, and State or Local Governments.

Estimated Number of Respondents:

MA–10000—Multiple Establishment Companies	34,161
MA–10000—Single Establishment Companies	15,253
Total	49,414

Estimated Time per Response:

MA–10000(L)—Multiple Establishment Companies	3.5 hrs.
MA–10000(S)—Single Establishment Companies	3.5 hrs.

Estimated Total Annual Burden Hours: 172,949.

Estimated Total Annual Cost to Public: $0. (This is not the cost of respondents' time, but the indirect costs respondents may incur for such things as purchases of specialized software or hardware needed to report, or expenditures for accounting or records maintenance services required specifically by the collection.)

Respondents Obligation: Mandatory.

Legal Authority: Title 13, United States Code, Sections 131 and 182.

IV. Request for Comments

We are soliciting public comments to permit the Department/Bureau to: (a) Evaluate whether the proposed information collection is necessary for the proper functions of the Department, including whether the information will have practical utility; (b) Evaluate the accuracy of our estimate of the time and cost burden for this proposed collection, including the validity of the methodology and assumptions used; (c) Evaluate ways to enhance the quality, utility, and clarity of the information to be collected; and (d) Minimize the reporting burden on those who are to respond, including the use of automated collection techniques or other forms of information technology.

Comments that you submit in response to this notice are a matter of public record. We will include, or summarize, each comment in our request to OMB to approve this ICR. Before including your address, phone number, email address, or other personal identifying information in your comment, you should be aware that your entire comment—including your personal identifying information—may be made publicly available at any time. While you may ask us in your comment to withhold your personal identifying information from public review, we

cannot guarantee that we will be able to do so.

Sheleen Dumas,

Department PRA Clearance Officer, Office of the Chief Information Officer, Commerce Department.

[FR Doc. 2020–19991 Filed 9–9–20; 8:45 am]

BILLING CODE 3510–07–P

DEPARTMENT OF COMMERCE

Census Bureau

Agency Information Collection Activities; Submission to the Office of Management and Budget (OMB) for Review and Approval; Comment Request; Annual Wholesale Trade Survey

The Department of Commerce will submit the following information collection request to the Office of Management and Budget (OMB) for review and clearance in accordance with the Paperwork Reduction Act of 1995, on or after the date of publication of this notice. We invite the general public and other Federal agencies to comment on proposed, and continuing information collections, which helps us assess the impact of our information collection requirements and minimize the public's reporting burden. Public comments were previously requested via the **Federal Register** on June 3, 2020 during a 60-day comment period. This notice allows for an additional 30 days for public comments.

Agency: U.S. Census Bureau.

Title: Annual Wholesale Trade Survey.

OMB Control Number: 0607–0195.

Form Number(s): SA–42A, SA–42A–MSBO, SA–42A–AGBR.

Type of Request: Regular submission. Request for a Revision of a Currently Approved Collection.

Number of Respondents: 7,743.

Average Hours per Response: 1 hour and 16 minutes.

Burden Hours: 9,846.

Needs and Uses: The Annual Wholesale Trade Survey (AWTS) covers employer firms with establishments located in the United States and classified in the wholesale trade sector, as defined by the North American Industry Classification System (NAICS). There are two main types of wholesalers in the wholesale trade sector: (1) Merchant wholesalers and (2) agents, brokers, and electronic markets. Merchant wholesalers sell goods on their own account. This category includes sales offices and sales branches (except retail stores) maintained by manufacturing, refining, or mining enterprises apart from their plants or mines for the purpose of marketing their products. Agents, brokers, and electronic markets, on the other hand, arrange sales and purchases for others (generally for a commission or fee).

Respondents are further separated into the following three type of operation categories: Merchant wholesalers, excluding manufacturers' sales branches and offices; manufacturers' sales branches and offices; and agents, brokers, and electronic markets. The firms are instructed to submit their information to the Census Bureau via Centurion, the Census Bureau's online reporting instrument. The AWTS requests data on a variety of topics. A firm's type of operation classification dictates which particular subset of data items it will receive.

In response to a request from the Bureau of Economic Analysis (BEA), the AWTS will also collect annual detailed operating expenses and annual sales tax information during survey year 2022. Respondents are only asked to provide data for these two items in years ending in ''2'' and ''7'', which coincide with the Economic Census collection. Merchant wholesalers, excluding manufacturers' sales branches and offices, will receive the detailed operating expenses and sales tax questions. Conversely, manufacturers' sales branches and offices will only see the sales tax question. Companies that fall under the agents, brokers, and electronic markets category will not be asked to provide detailed operating expenses or sales tax information.

This survey provides an official, continuous measure of wholesale activity in the United States. Government agencies, private businesses, and researchers utilize the estimates generated from the AWTS in a variety of ways, including to conduct market analysis and forecast future demand.

From survey year 2016 through survey year 2019, there were five electronic form types (SA–42, SA–42A, SA–42A–MSBO, SA–42–AGBR, and SA–42A–AGBR). Starting with survey year 2020 (which will be collected in 2021), there will only be three electronic form types (SA–42A, SA–42A–MSBO, and SA–42A–AGBR). SA–42 and SA–42–AGBR are being removed to streamline data collection operations and reduce respondent burden.

Each year, estimates generated from the AWTS are released to the public approximately 14 months after the reference period has concluded. These national-level estimates are published (for the various items collected) by NAICS code and type of operation. (The current sample was selected on a 2012 NAICS basis, so the estimates are also released on a 2012 NAICS basis. Data will not be published on a 2017 NAICS basis until the next sample revision occurs, which will not take place during this three-year clearance window.) The data are currently disseminated through the AWTS website. In the future, however, the data will be released via the Census Bureau's dissemination platform, *data.census.gov.* The survey year 2020 data products are scheduled to be released through *data.census.gov.*

The Census Bureau issued a pre-submission notice that was published in the **Federal Register** on Wednesday, June 3, 2020 (Vol. 85, No. 107). The notice, which was located on pages 34174 and 34175, stated that the AWTS was considering the addition of questions related to the impact coronavirus disease 2019 (COVID–19) had on firms for survey year 2020. After internal discussions, the Census Bureau decided it will not include COVID–19 questions on the AWTS.

The AWTS serves as a benchmark for the estimates produced from the Census Bureau's Monthly Wholesale Trade Survey (MWTS) [OMB No. 0607–0190].

Externally, the BEA uses the data to estimate the change in the private inventories component of gross domestic product (GDP) and output in both the benchmark and annual input-output (I–O) accounts and the GDP by industry statistics. This agency also utilizes the sales tax information to prepare estimates of GDP by industry and to derive industry output for the I–O accounts. The data on detailed operating expenses are used to produce national estimates of value added, gross output, and intermediate inputs and serve as a benchmark for the annual industry accounts, which provide the control totals for the GDP by state accounts.

The Bureau of Labor Statistics (BLS) utilizes the data as an input to its producer price indices and in developing productivity measurements.

Other government agencies, researchers, and businesses also use the data for a variety of reasons. For example, private businesses utilize the estimates in computing business activity indices. Additionally, the AWTS data are used to conduct economic market analysis, forecast future demand, and evaluate company performance.

Affected Public: Business or other for-profit organizations.

Frequency: Annually.

Respondent's Obligation: Mandatory.

Legal Authority: The Census Bureau conducts this survey under the

authority of Title 13, United States Code, Sections 131 and 182. Sections 224 and 225 make this survey mandatory.

This information collection request may be viewed at *www.reginfo.gov.* Follow the instructions to view the Department of Commerce collections currently under review by OMB.

Written comments and recommendations for the proposed information collection should be submitted within 30 days of the publication of this notice on the following website *www.reginfo.gov/public/do/PRAMain.* Find this particular information collection by selecting ''Currently under 30-day Review—Open for Public Comments'' or by using the search function and entering either the title of the collection or the OMB Control Number 0607–0195.

Sheleen Dumas,

Department PRA Clearance Officer, Office of the Chief Information Officer, Commerce Department.

[FR Doc. 2020–19987 Filed 9–9–20; 8:45 am]

BILLING CODE 3510–07–P

DEPARTMENT OF COMMERCE

Census Bureau

Agency Information Collection Activities; Submission to the Office of Management and Budget (OMB) for Review and Approval; Comment Request; Annual Capital Expenditures Survey

AGENCY: U.S. Census Bureau, Commerce.

ACTION: Notice of information collection, request for comment.

SUMMARY: The Department of Commerce, in accordance with the Paperwork Reduction Act (PRA) of 1995, invites the general public and other Federal agencies to comment on proposed, and continuing information collections, which helps us assess the impact of our information collection requirements and minimize the public's reporting burden. The purpose of this notice is to allow for 60 days of public comment on the proposed revision of the Annual Capital Expenditures Survey prior to the submission of the information collection request (ICR) to OMB for approval.

DATES: To ensure consideration, comments regarding this proposed information collection must be received on or before November 9, 2020.

ADDRESSES: Interested persons are invited to submit written comments by email to *Thomas.J.Smith@census.gov.* Please reference Annual Capital Expenditures Survey in the subject line of your comments. You may also submit comments, identified by Docket Number USBC–2020–0025, to the Federal e-Rulemaking Portal: *http://www.regulations.gov.* All comments received are part of the public record. No comments will be posted to *http://www.regulations.gov* for public viewing until after the comment period has closed. Comments will generally be posted without change. All Personally Identifiable Information (for example, name and address) voluntarily submitted by the commenter may be publicly accessible. Do not submit Confidential Business Information or otherwise sensitive or protected information. You may submit attachments to electronic comments in Microsoft Word, Excel, or Adobe PDF file formats.

FOR FURTHER INFORMATION CONTACT: Requests for additional information or specific questions related to collection activities should be directed to Valerie Mastalski, Chief, Capital Expenditures Branch, Economy-Wide Statistics Division, U.S. Census Bureau, (301) 763–3317, or *Valerie.Cherry.Mastalski@Census.gov.*

SUPPLEMENTARY INFORMATION:

I. Abstract

The U.S. Census Bureau plans to conduct the 2020 through 2022 Annual Capital Expenditures Survey (ACES). This survey collects data on fixed assets and depreciation, sales and receipts, capitalized computer software, capitalized robotic equipment and capital expenditures for new and used structures and equipment. The ACES is the sole source of detailed comprehensive statistics on actual business spending for private non-farm companies, organizations, and associations operating in the United States. Both employer and non-employer companies are included in the survey.

The Bureau of Economic Analysis is a primary Federal user of ACES data. BEA relies on ACES data to refine and evaluate annual estimates of investment in structures and equipment in the national income and product accounts, compile annual input-output tables, and compute gross domestic product by industry. The Federal Reserve Board uses these data to improve estimates of investment indicators for monetary policy. The Bureau of Labor Statistics uses these data to improve estimates of capital stocks for productivity analysis. The Centers for Medicare and Medicaid Services use these data for developing estimates of investment in private health care structures and equipment as a part of the National Health Expenditure Accounts. Industry analysts use these data for market analysis, economic forecasting, identifying business opportunities, product development, and business planning.

Planned changes:

A. *Content related to the Coronavirus Pandemic:*

a. Add a question asking if the business received financial assistance through a federal, state, or local relief program.

i. If yes, what percent of the financial assistance was spent on payroll, rent/mortgage, utilities, capital expenditures, other.

b. Add a question seeking impact on payrolls in the absence of financial assistance (*i.e.,* reduced hours, reduced pay, reduced staff, other).

c. Add a question asking if the business experienced a change in capital expenditure plans.

d. Add a question asking if the business's capital expenditures funded safety/social distancing investments.

B. *Revisions related to integrating annual surveys:* The Census Bureau is undertaking an initiative to integrate and re-engineer select annual programs. Programs include the Annual Survey of Manufactures (ASM), Annual Retail Trade Survey (ARTS), Annual Wholesale Trade Survey (AWTS), Services Annual Survey (SAS), Annual Capital Expenditures Survey (ACES), Manufacturing Shipments Inventories and Unfilled Orders (M3UFO), and Company Organizational Survey (COS). Efforts include coordinating collection strategies/instruments/communication; integrating, changing or revising content; ensuring content is relevant; coordinating samples; and improving frame and coordinating status updates across annual surveys.

C. Robotic equipment expenditures were first collected from employer businesses on the 2018 ACES. Expenditures for both industrial and service robotics were collected at the company level and assigned to the company's primary industry. The U.S. Census Bureau plans to modify the 2020 ACES to collect the presence of robotic equipment and investment by industry segment. This will improve the data quality by providing researchers and other data users better information about what industries are using technology. This will enable researchers and other data users to better use this survey as a vehicle for continual monitoring of technology and the workforce.

a. Add question on the presence of robots in the company.

b. Collect robotic equipment expenditures by industry segment.

D. Burden (only requested of non-employers).

a. Add a question requesting the amount of time it took to complete the non-employer survey.

As stated above, we plan to add questions related to the Coronavirus Pandemic. The primary objective is to measure the impact of the Coronavirus Pandemic on businesses and the economy, and meet the needs of the data user community. As we continue in these unprecedented times, the Coronavirus Pandemic content may shift, change or evolve and require further modifications on ACES.

The initiative to integrate and re-engineer select annual programs is scheduled to begin implementation in survey year 2023. The goal is to shift select annual programs from individual independent surveys to a streamlined integrated annual program. The new annual program will move from industry focused, individual surveys to requesting a more holistic view of the companies. Prior to survey year 2023, we plan to begin to align our annual programs and improve efficiencies across programs in targeted areas related to consistent content, processes, and systems. The initiative is in response to data user needs (timely, granular, harmonized data), and declining response rates.

II. Method of Collection

The initial mailing will include a letter instructing respondents to report online. The electronic reporting system provides a cost-effective and user-friendly method to collect data from companies. The Census Bureau will supply companies with a unique authentication code for the electronic reporting tool. Respondents will have the option of printing out a worksheet that lists all of the questions. Respondents will be able to print the worksheet to use as a guide to respond or can print the worksheet after completing the questionnaire as a record of their response. The online reporting instrument is tailored to the company's diversity of operations and number of industries with payroll. Employer companies will complete the ACE–1 electronic reporting instrument and non-employers will complete the ACE–2 electronic reporting instrument. Companies will be asked to respond to the survey within 30 days of the initial mailing. The Census Bureau will use reminder letters and/or telephone calls to encourage participation of companies that have not responded within 30 days.

III. Data

OMB Control Number: 0607–0782.

Form Number(s): ACE–1 and ACE–2.

Type of Review: Regular Submission, Request for a Revision of a Currently Approved Collection.

Affected Public: Private, non-farm businesses or other for-profit organizations, non-profit institutions.

Estimated Number of Respondents: Approximately 70,000 (50,000 employer companies, and 20,000 non-employer businesses).

Estimated Time per Response: The average for all respondents is 2.27 hours. For employer companies completing form ACE–1, the range is 2 to 17 hours, averaging 2.78 hours. For companies completing form ACE–2, the range is less than 1 hour to 2 hours, averaging 1 hour.

Estimated Total Annual Burden Hours: 159,000 hours.

Estimated Total Annual Cost to Public: $0. (This is not the cost of respondents' time, but the indirect costs respondents may incur for such things as purchases of specialized software or hardware needed to report, or expenditures for accounting or records maintenance services required specifically by the collection.)

Respondent's Obligation: Mandatory.

Legal Authority: Title 13 United States Code, Sections 131 and 182.

IV. Request for Comments

We are soliciting public comments to permit the Department/Bureau to: (a) Evaluate whether the proposed information collection is necessary for the proper functions of the Department, including whether the information will have practical utility; (b) Evaluate the accuracy of our estimate of the time and cost burden for this proposed collection, including the validity of the methodology and assumptions used; (c) Evaluate ways to enhance the quality, utility, and clarity of the information to be collected; and (d) Minimize the reporting burden on those who are to respond, including the use of automated collection techniques or other forms of information technology.

Comments that you submit in response to this notice are a matter of public record. We will include, or summarize, each comment in our request to OMB to approve this ICR. Before including your address, phone number, email address, or other personal identifying information in your comment, you should be aware that your entire comment—including your personal identifying information—may be made publicly available at any time. While you may ask us in your comment to withhold your personal identifying information from public review, we cannot guarantee that we will be able to do so.

Sheleen Dumas,

Department PRA Clearance Officer, Office of the Chief Information Officer, Commerce Department.

[FR Doc. 2020–19988 Filed 9–9–20; 8:45 am]

BILLING CODE 3510–07–P

DEPARTMENT OF COMMERCE

Census Bureau

Agency Information Collection Activities; Submission to the Office of Management and Budget (OMB) for Review and Approval; Comment Request; Supplemental Questions to the Annual Business Survey (0607–1004) To Capture a Baseline of Work From Home Options of Businesses In 2019

The Department of Commerce will submit the following information collection request to the Office of Management and Budget (OMB) for review and clearance in accordance with the Paperwork Reduction Act of 1995, on or after the date of publication of this notice. We invite the general public and other Federal agencies to comment on proposed, and continuing information collections, which helps us assess the impact of our information collection requirements and minimize the public's reporting burden. Public comments were previously requested via the **Federal Register** on July 6, 2020 during a 60-day comment period. This notice allows for an additional 30 days for public comments.

Agency: U.S. Census Bureau.

Title: Supplemental questions to the Annual Business Survey (0607–1004) to capture a baseline of work from home options of businesses in 2019.

OMB Control Number: 0607–1015.

Form Number(s): None.

Type of Request: Regular submission, Regular Submission. Request for an Extension, without Change, of a Currently Approved Collection.

Number of Respondents: 300,000.

Average Hours per Response: 3 minutes.

Burden Hours: 15,000.

Needs and Uses: The U.S. Census Bureau requests an extension to the approved request for clearance of the adding supplemental questions to the Annual Business Survey (0607–1004) to capture a baseline of remote work options at businesses in 2019. The OMB

number for the supplemental questions is 0607–1015. The supplemental questions were approved by OMB under an emergency clearance through November 30, 2020. This extension is needed due to the necessity to keep the 2020 ABS in the field through December 31, 2020. We seek approval for this extension by November 30, 2020.

The additional questions are designed to measure work from home operations of businesses in 2019 to capture a baseline. If deemed warranted, next year's ABS would propose adding the same or similar questions to understand work from home operations of businesses during the Coronavirus pandemic in 2020. ABS is designed to allow for incorporating new content each survey year based on topics of relevance. The ABS includes all nonfarm employer businesses filing Internal Revenue Service (IRS) tax forms as individual proprietorships, partnerships, or any other type of corporations, with receipts of $1,000 or more.

The questions are part of Section A—Company Information. The questions are designed to measure three concepts, specifically for 2019 (prior to the Coronavirus pandemic):

(1) Does the firm allow work from home?

(2) To what degree are employees of the firm engaging in work from home?

(3) What are the limiting factors for work from home?

The supplemental questions are being collected in the ABS is to establish a baseline for the status of work from home prior to the coronavirus pandemic. These data are not available from any other source. The ABS is uniquely positioned to create these estimates, and we may want to ask these questions again in the future to see if the coronavirus pandemic has an immediate effect (in 2020) or longer run effect (in 2021) on businesses offering work at home options to their employees. The goal of adding work from home content would be to:

- Create estimates of the number of businesses that provide work from home options for their employees by business characteristics (for example: Size, age, geography, industry)
- Create percent of workers who are working from home by business characteristics (for example: Size, age, geography, industry)
- Determine if businesses ability/willingness to offer expanded work from home options to employees changed during the pandemic and if those options were temporary or appear to be more permanent conditions of employment within those businesses.

Affected Public: Business or other for-profit organizations.

Frequency: Annually.

Respondent's Obligation: Mandatory.

Legal Authority: Title 13 United States Code, Sections 8(b), 131, and 182; Title 42 United States Code, Section 1861–76 (National Science Foundation Act of 1950, as amended); and Section 505 within the America COMPETES Reauthorization Act of 2010 authorize this collection. Sections 224 and 225 of Title 13 United States Code require response from sampled firms.

This information collection request may be viewed at *www.reginfo.gov*. Follow the instructions to view the Department of Commerce collections currently under review by OMB.

Written comments and recommendations for the proposed information collection should be submitted within 30 days of the publication of this notice on the following website *www.reginfo.gov/public/do/PRAMain*. Find this particular information collection by selecting ''Currently under 30-day Review—Open for Public Comments'' or by using the search function and entering either the title of the collection or the OMB Control Number 0607–1015.

Sheleen Dumas,

Department PRA Clearance Officer, Office of the Chief Information Officer, Commerce Department.

[FR Doc. 2020–19989 Filed 9–9–20; 8:45 am]

BILLING CODE 3510–07–P

DEPARTMENT OF COMMERCE

Economic Development Administration

Notice of Petitions by Firms for Determination of Eligibility To Apply for Trade Adjustment Assistance

AGENCY: Economic Development Administration, U.S. Department of Commerce.

ACTION: Notice and opportunity for public comment.

SUMMARY: The Economic Development Administration (EDA) has received petitions for certification of eligibility to apply for Trade Adjustment Assistance from the firms listed below. Accordingly, EDA has initiated investigations to determine whether increased imports into the United States of articles like or directly competitive with those produced by each of the firms contributed importantly to the total or partial separation of the firms' workers, or threat thereof, and to a decrease in sales or production of each petitioning firm.

SUPPLEMENTARY INFORMATION:

LIST OF PETITIONS RECEIVED BY EDA FOR CERTIFICATION OF ELIGIBILITY TO APPLY FOR TRADE ADJUSTMENT ASSISTANCE

[8/22/2020 through 9/2/2020]

Firm name	Firm address	Date accepted for investigation	Product(s)
Schafer Woodworks, Inc	10695 Macon Highway, Tecumseh, MI 49286.	8/24/2020	The firm manufactures hardwood flooring.
Nuvar, Inc	895 East 40th Street, Holland, MI 49423.	8/25/2020	The firm manufactures office furniture.
Salisbury, Inc	29085 Airpark Drive, Easton, MD 21601.	8/27/2020	The firm manufactures tableware, kitchenware, and other household articles of pewter, silver, and aluminum.
Precise Tooling Solutions, Inc	3150 North Scott Drive, Columbus, IN 47201.	8/28/2020	The firm manufactures molds for plastic injection molding.

Any party having a substantial interest in these proceedings may request a public hearing on the matter. A written request for a hearing must be submitted to the Trade Adjustment Assistance Division, Room 71030,

Economic Development Administration, U.S. Department of Commerce, Washington, DC 20230, no later than ten (10) calendar days following publication of this notice. These petitions are received pursuant to section 251 of the Trade Act of 1974, as amended.

Please follow the requirements set forth in EDA's regulations at 13 CFR 315.9 for procedures to request a public hearing. The Catalog of Federal Domestic Assistance official number and title for the program under which these petitions are submitted is 11.313, Trade Adjustment Assistance for Firms.

Bryan Borlik,

Director.

[FR Doc. 2020–19948 Filed 9–9–20; 8:45 am]

BILLING CODE 3510–WH–P

DEPARTMENT OF COMMERCE

International Trade Administration

[A–580–903, A–523–813]

Polyethylene Terephthalate Sheet From the Republic of Korea and the Sultanate of Oman: Antidumping Duty Orders

AGENCY: Enforcement and Compliance, International Trade Administration, Department of Commerce.

SUMMARY: Based on affirmative final determinations by the Department of Commerce (Commerce) and the International Trade Commission (ITC), Commerce is issuing antidumping duty orders on polyethylene terephthalate sheet (PET sheet) from the Republic of Korea (Korea) and the Sultanate of Oman (Oman).

DATES: Applicable September 10, 2020.

FOR FURTHER INFORMATION CONTACT: Katherine Sliney at (202) 482–2437 (Korea) or Matthew Renkey at (202) 482–2312 (Oman); AD/CVD Operations, Offices III and V, respectively, Enforcement and Compliance, International Trade Administration, U.S. Department of Commerce, 1401 Constitution Avenue NW, Washington, DC 20230.

SUPPLEMENTARY INFORMATION:

Background

In accordance with sections 735(d) and 777(i)(1) of the Tariff Act of 1930, as amended (the Act), and 19 CFR 351.210(c), on July 22, 2020, Commerce published its affirmative final determinations in the less-than-fair-value (LTFV) investigations of PET sheet from Korea and Oman.[1] On September 3, 2020, the ITC notified Commerce of its final affirmative determinations that an industry in the United States is materially injured within the meaning of section 735(b)(1)(A)(i) of the Act, by reason of the LTFV imports of PET sheet from Korea and Oman.[2]

Scope of the Orders

The merchandise covered by these orders is PET sheet from Korea and Oman. For a complete description of the scope of the *Orders, see* the Appendix to this notice.

Antidumping Duty Orders

On September 3, 2020, in accordance with sections 735(b)(1)(A)(i) and 735(d) of the Act, the ITC notified Commerce of its final determinations that an industry in the United States is materially injured by reason of imports of PET sheet from Korea and Oman.[3] Therefore, Commerce is issuing these antidumping duty orders in accordance with sections 735(c)(2) and 736 of the Act. Because the ITC determined that imports of PET sheet from Korea and Oman are materially injuring a U.S. industry, unliquidated entries of such merchandise from Korea and Oman, which are entered or withdrawn from warehouse for consumption, are subject to the assessment of antidumping duties.

As a result of the ITC's final affirmative determinations, in accordance with section 736(a)(1) of the Act, Commerce will direct U.S. Customs and Border Protection (CBP) to assess, upon further instruction by Commerce, antidumping duties equal to the amount by which the normal value of the merchandise exceeds the export price or constructed export price of the merchandise, for all relevant entries of PET sheet from Korea and Oman. Antidumping duties will be assessed on unliquidated entries of PET sheet from Korea and Oman entered, or withdrawn from warehouse, for consumption on or after March 3, 2020, the date of publication of the *Preliminary Determinations,*[4] but will not include entries occurring after the expiration of the provisional measures period and before publication in the **Federal Register** of the ITC's injury determination, as further described below.

Continuation of Suspension of Liquidation

In accordance with section 736 of the Act, Commerce will instruct CBP to continue to suspend liquidation of PET sheet from Korea and Oman as described in the Appendix to this notice which are entered, or withdrawn from warehouse, for consumption on or after the date of publication of the ITC's notice of final determination in the **Federal Register**. These instructions suspending liquidation will remain in effect until further notice.

We will also instruct CBP to require cash deposits equal to the amounts as indicated below. Accordingly, effective on the date of publication of the ITC's final affirmative injury determination, CBP will require, at the same time as importers would normally deposit estimated duties on this subject merchandise, a cash deposit equal to the cash deposit rates listed below.[5] The all-others rate for each country applies to all producers or exporters not specifically listed.

Estimated Weighted-Average Dumping Margins

The estimated weighted-average dumping margins for each antidumping duty order are as follows:

Exporter/producer	Weighted-average dumping margin (percent)
Korea:	
Jin Young Chemical Co., Ltd. (JYC) and Jinyoung Co., Ltd. (JYL) (collectively, the Jin Young Group)	7.19

[1] *See Polyethylene Terephthalate Sheet from the Republic of Korea: Final Determination of Sales at Less Than Fair Value,* 85 FR 44276 (July 22, 2020); and *Polyethylene Terephthalate Sheet from the Sultanate of Oman: Final Determination of Sales at Less Than Fair Value,* 85 FR 44278 (July 22, 2020).

[2] *See* ITC's Letter, ''ITC's Notification of ITC Final Determinations,'' dated September 3, 2020 (ITC Notification Letter).

[3] *See* ITC Notification Letter.

[4] *See Polyethylene Terephthalate Sheet from the Republic of Korea: Preliminary Affirmative Determination of Sales at Less Than Fair Value, Postponement of Final Decision, and Extension of Provisional Measures,* 85 FR 12500 (March 3, 2020); and *Polyethylene Terephthalate Sheet from the Sultanate of Oman: Preliminary Affirmative Determination of Sales at Less Than Fair Value, Postponement of Final Decision, and Extension of Provisional Measures,* 85 FR 12513 (March 3, 2020) (collectively, *Preliminary Determinations*).

[5] *See* section 736(a)(3) of the Act.

Exporter/producer	Weighted-average dumping margin (percent)
Plastech Co., Ltd	52.01
Chungdang Co	52.01
K Stout Co	52.01
Kemicolor Corp	52.01
KP Tech Ltd	52.01
Moojin Che	52.01
OKS Poly	52.01
Puyong Industry Co	52.01
Samjin Plastic Co	52.01
Sangil Corp	52.01
SK Chemicals	52.01
Tae Kwang New Tech Co., Ltd	52.01
Unidesign Co	52.01
All Others	7.19
Oman:	
OCTAL SAOC–FZC (OCTAL)	4.74
All Others	4.74

Provisional Measures

Section 733(d) of the Act states that suspension of liquidation pursuant to an affirmative preliminary determination may not remain in effect for more than four months, except that Commerce may extend the four-month period to no more than six months at the request of the exporters representing a significant proportion of exports of the subject merchandise. At the request of exporters that account for a significant proportion of PET sheet from Korea and Oman, we extended the four-month period to six months in the *Preliminary Determinations,* published on March 3, 2020. Therefore, the extended period, beginning on the date of the publication of the preliminary determinations, ended on August 29, 2020. Pursuant to section 737(b) of the Act, the collection of cash deposits at the rates listed above will begin on the date of publication of the ITC's final injury determination.

Therefore, in accordance with section 733(d) of the Act and our practice, we will instruct CBP to terminate the suspension of liquidation and to liquidate, without regard to antidumping duties, unliquidated entries of PET sheet from Korea and Oman entered, or withdrawn from warehouse, for consumption, on or after August 30, 2020, the first day provisional measures are no longer in effect, until and through the day preceding the date of publication of the ITC's final injury determination in the **Federal Register**. Suspension of liquidation will resume on the date of publication of the ITC's final determination in the **Federal Register**.

Notification to Interested Parties

This notice constitutes the antidumping duty orders with respect to PET sheet from Korea and Oman pursuant to section 736(a) of the Act. Interested parties can find a list of antidumping duty orders currently in effect at *http://enforcement.trade.gov/stats/iastats1.html.*

These orders are published in accordance with section 736(a) of the Act and 19 CFR 351.211(b).

Dated: September 3, 2020.

Jeffrey I. Kessler,

Assistant Secretary for Enforcement and Compliance.

Appendix I

Scope of the Orders

The merchandise covered by these orders is raw, pretreated, or primed polyethylene terephthalate sheet, whether extruded or coextruded, in nominal thicknesses of equal to or greater than 7 mil (0.007 inches or 177.8 μm) and not exceeding 45 mil (0.045 inches or 1143 μm) (PET sheet). The scope includes all PET sheet whether made from prime (virgin) inputs or recycled inputs, as well as any blends thereof. The scope includes all PET sheet meeting the above specifications regardless of width, color, surface treatment, coating, lamination, or other surface finish.

The merchandise subject to these orders is properly classified under statistical reporting number 3920.62.0090 of the Harmonized Tariff Schedule of the United States (HTSUS). Although the HTSUS statistical reporting number is provided for convenience and customs purposes, the written description of the merchandise is dispositive.

[FR Doc. 2020–20011 Filed 9–9–20; 8:45 am]

BILLING CODE 3510–DS–P

DEPARTMENT OF COMMERCE

International Trade Administration

[A–570–122]

Certain Corrosion Inhibitors From the People's Republic of China: Preliminary Affirmative Determination of Sales at Less Than Fair Value, Postponement of Final Determination, and Extension of Provisional Measures

AGENCY: Enforcement and Compliance, International Trade Administration, Department of Commerce.

SUMMARY: The Department of Commerce (Commerce) preliminarily determines that certain corrosion inhibitors (corrosion inhibitors) from the People's Republic of China (China) are being, or are likely to be, sold in the United States at less than fair value (LTFV). The period of investigation (POI) is July 1, 2019 through December 31, 2019. Interested parties are invited to comment on this preliminary determination.

DATES: Applicable September 10, 2020.

FOR FURTHER INFORMATION CONTACT: Lochard Philozin or Andre Gziryan, AD/CVD Operations, Office I, Enforcement and Compliance, International Trade Administration, U.S. Department of Commerce, 1401 Constitution Avenue NW, Washington, DC 20230; telephone: (202) 482–4260 or (202) 482–2201, respectively.

SUPPLEMENTARY INFORMATION:

Background

This preliminary determination is made in accordance with section 733(b) of the Tariff Act of 1930, as amended (the Act). Commerce published the notice of initiation of this investigation

on March 3, 2020.[1] On June 10, 2020, Commerce postponed the preliminary determination of this investigation, and the revised deadline is now September 2, 2020.[2] For a complete description of the events that followed the initiation of this investigation, *see* the Preliminary Decision Memorandum.[3] A list of topics included in the Preliminary Decision Memorandum is included as Appendix II to this notice. The Preliminary Decision Memorandum is a public document and is on file electronically via Enforcement and Compliance's Antidumping and Countervailing Duty Centralized Electronic Service System (ACCESS). ACCESS is available to registered users at *https://access.trade.gov.* In addition, a complete version of the Preliminary Decision Memorandum can be accessed directly at *http://enforcement.trade.gov/frn/.* The signed and the electronic versions of the Preliminary Decision Memorandum are identical in content.

Scope of the Investigation

The products covered by this investigation are corrosion inhibitors from China. For a complete description of the scope of this investigation, *see* Appendix I.

Scope Comments

In accordance with the preamble to Commerce's regulations,[4] the *Initiation Notice* set aside a period of time for parties to raise issues regarding product coverage (*i.e.,* scope).[5] No interested party commented on the scope of the investigation. Thus, Commerce has not modified the scope language as it appeared in the *Initiation Notice.*

Methodology

Commerce is conducting this investigation in accordance with section 731 of the Act. Commerce has calculated export prices in accordance with section 772(a) of the Act and constructed export prices in accordance with section 772(b) of the Act. Because China is a non-market economy, within the meaning of section 771(18) of the Act, Commerce has calculated normal value in accordance with section 773(c) of the Act.

In addition, Commerce has relied on facts available under section 776(a) of the Act to determine the cash deposit rate assigned to the China-wide entity. Furthermore, pursuant to sections 776 (a) and (b) of the Act because the Chine-wide entity did not cooperate to the best of its ability in responding to the Commerce's request for data, Commerce preliminarily has relied upon facts otherwise available, with adverse inferences, for the China-wide Entity. For a full description of the methodology underlying Commerce's preliminary determination, *see* the Preliminary Decision Memorandum.

Combination Rates

In the *Initiation Notice,*[6] Commerce stated that it would calculate producer/exporter combination rates for the respondents that are eligible for a separate rate in this investigation. Policy Bulletin 05.1 describes this practice.[7]

Preliminary Determination

Commerce preliminarily determines that the following estimated weighted-average dumping margins exist:

Producer	Exporter	Estimated weighted-average dumping margin (percent)	Cash deposit rate (adjusted for subsidy offsets) (percent)
Nantong Botao Chemical Co., Ltd	Jiangyin Delian Chemical Co., Ltd	122.11	64.53
Nantong Kanghua Chemical Co., Ltd	Jiangyin Delian Chemical Co., Ltd	122.11	64.53
Nantong Botao Chemical Co., Ltd	Nantong Botao Chemical Co., Ltd	128.06	94.71
Anhui Trust Chem Co., Ltd	Anhui Trust Chem Co., Ltd	125.09	79.63
Gold Chemical Limited	Gold Chemical Limited	125.09	79.63
Jiangsu Bohan Industry Trade Co., Ltd	Gold Chemical Limited	125.09	79.63
Jiangyin Gold Fuda Chemical Co., Ltd	Gold Chemical Limited	125.09	79.63
Ningxia Ruitai Technology Co., Ltd	Gold Chemical Limited	125.09	79.63
SHANGHAI SUNTECH BIOCHEMICAL CO., LTD.	Gold Chemical Limited	125.09	79.63
Nantong Kanghua Chemical Co., Ltd	Nantong Kanghua Chemical Co., Ltd	125.09	79.63
Anhui Trust Chem Co., Ltd	Nanjing Trust Chem Co., Ltd	125.09	79.63
China-Wide Entity		260.92	227.57

Suspension of Liquidation

In accordance with section 733(d)(2) of the Act, Commerce will direct U.S. Customs and Border Protection (CBP) to suspend liquidation of subject merchandise, as described in the scope of the investigation section, entered, or withdrawn from warehouse, for consumption on or after the date of publication of this notice in the **Federal Register**, as discussed below. Further, pursuant to section 733(d)(1)(B) of the Act and 19 CFR 351.205(d), Commerce will instruct CBP to require a cash deposit equal to the weighted average amount by which normal value exceeds U.S. price, as indicated in the chart above, as follows: (1) For the producer/exporter combinations listed in the table above, the cash deposit rate is equal to the estimated weighted-average dumping margin listed for that combination in the table; (2) for all combinations of Chinese producers/exporters of subject merchandise that have not established eligibility for their own separate rates, the cash deposit rate will be equal to the estimated weighted-average dumping margin established for the China-wide entity; and (3) for all third-country exporters of subject merchandise not listed in the table above, the cash deposit rate is the cash deposit rate applicable to the Chinese producer/exporter combination (or

[1] *See Certain Corrosion Inhibitors from the People's Republic of China: Initiation of Less-Than-Fair-Value Investigations,* 85 FR 12506 (March 3, 2020) *(Initiation Notice).*

[2] *See Certain Corrosion Inhibitors from the People's Republic of China: Postponement of Preliminary Determination of Antidumping Duty Investigation,* 85 FR 36376 (June 16, 2020).

[3] *See* Memorandum, ''Certain Corrosion Inhibitors from the People's Republic of China: Decision Memorandum for Preliminary Affirmative Determination of Sales at Less Than Fair Value,'' dated concurrently with, and hereby adopted by, this notice (Preliminary Decision Memorandum).

[4] *See Antidumping Duties; Countervailing Duties, Final Rule,* 62 FR 27296, 27323 (May 19, 1997).

[5] *See Initiation Notice.*

[6] *See Initiation Notice* at 85 FR 12506.

[7] *See* Enforcement and Compliance's Policy Bulletin No. 05.1, regarding, ''Separate-Rates Practice and Application of Combination Rates in Antidumping Investigations involving Non-Market Economy Countries,'' (April 5, 2005) (Policy Bulletin 05.1), available on Commerce's website at *http://enforcement.trade.gov/policy/bull05-1.pdf.*

China-wide entity) that supplied that third-country exporter.

To determine the cash deposit rate, Commerce normally adjusts the estimated weighted-average dumping margin by the amount of domestic subsidy pass-through and export subsidies determined in a companion countervailing duty (CVD) proceeding when CVD provisional measures are in effect. Accordingly, where Commerce has made a preliminary affirmative determination for domestic subsidy pass-through or export subsidies, Commerce has offset the calculated estimated weighted-average dumping margin by the appropriate rate(s). Any such adjusted rates may be found in the Preliminary Determination section's chart of estimated weighted-average dumping margins above.

Should provisional measures in the companion CVD investigation expire prior to the expiration of provisional measures in this LTFV investigation, Commerce will direct CBP to begin collecting cash deposits at a rate equal to the estimated weighted-average dumping margins calculated in this preliminary determination unadjusted for the passed-through domestic subsidies or for export subsidies at the time the CVD provisional measures expire. These suspension of liquidation instructions will remain in effect until further notice.

Disclosure

Commerce intends to disclose to interested parties the calculations performed in connection with this preliminary determination within five days of its public announcement or, if there is no public announcement, within five days of the date of publication of this notice in accordance with 19 CFR 351.224(b).

Verification

As provided in section 782(i)(1) of the Act, Commerce intends to verify the information relied upon in making its final determination.

Public Comment

Case briefs or other written comments may be submitted to the Assistant Secretary for Enforcement and Compliance no later than seven days after the date on which the last verification report is issued in this investigation. Rebuttal briefs, limited to issues raised in case briefs, may be submitted no later than seven days after the deadline date for case briefs.[8] Note that Commerce has modified certain of its requirements for serving documents containing business proprietary information until further notice.[9] Pursuant to 19 CFR 351.309(c)(2) and (d)(2), parties who submit case briefs or rebuttal briefs in this investigation are encouraged to submit with each argument: (1) A statement of the issue; (2) a brief summary of the argument; and (3) a table of authorities.

Pursuant to 19 CFR 351.310(c), interested parties who wish to request a hearing, limited to issues raised in the case and rebuttal briefs, must submit a written request to the Assistant Secretary for Enforcement and Compliance, U.S. Department of Commerce, within 30 days after the date of publication of this notice. Requests should contain the party's name, address, and telephone number, the number of participants, whether any participant is a foreign national, and a list of the issues to be discussed. If a request for a hearing is made, Commerce intends to hold the hearing at a time and date to be determined. Parties should confirm the date and time of the hearing two days before the scheduled date.

Postponement of Final Determination and Extension of Provisional Measures

Section 735(a)(2) of the Act provides that a final determination may be postponed until not later than 135 days after the date of the publication of the preliminary determination if, in the event of an affirmative preliminary determination, a request for such postponement is made by exporters who account for a significant proportion of exports of the subject merchandise, or in the event of a negative preliminary determination, a request for such postponement is made by the petitioners. Pursuant to 19 CFR 351.210(e)(2), Commerce requires that requests by respondents for postponement of a final antidumping determination be accompanied by a request for extension of provisional measures from a four-month period to a period not more than six months in duration.

Between August 25, 2020 and August 28, 2020, pursuant to 19 CFR 351.210(e), the mandatory respondents, Nantong Botao Chemical Co., Ltd., (Botao)[10] and Jiangyin Delian Chemical Co., Ltd. (Delian),[11] and the petitioner, Wincom, Inc. (petitioner),[12] requested that Commerce postpone the final determination and that provisional measures be extended to a period not to exceed six months. In accordance with section 735(a)(2)(A) of the Act and 19 CFR 351.210(b)(2)(ii), because (1) the preliminary determination is affirmative; (2) the requesting exporters account for a significant proportion of exports of the subject merchandise; and (3) no compelling reasons for denial exist, Commerce is postponing the final determination and extending the provisional measures from a four-month period to a period not greater than six months. Accordingly, Commerce will make its final determination no later than 135 days after the date of publication of this preliminary determination, pursuant to section 735(a)(2) of the Act.

International Trade Commission Notification

In accordance with section 733(f) of the Act, Commerce will notify the International Trade Commission (ITC) of its preliminary determination of sales at LTFV. If the final determination is affirmative, the ITC will determine before the later of 120 days after the date of this preliminary determination or 45 days after the final determination whether these imports of the subject merchandise are materially injuring, or threaten material injury to, the U.S. industry.

Notification to Interested Parties

This determination is issued and published in accordance with sections 733(f) and 777(i)(1) of the Act and 19 CFR 351.205(c).

Dated: September 2, 2020.

Jeffrey I. Kessler,

Assistant Secretary for Enforcement and Compliance.

Appendix I

Scope of the Investigation

The merchandise covered by this investigation is tolyltriazole and benzotriazole. This includes tolyltriazole and benzotriazole of all grades and forms, including their sodium salt forms. Tolyltriazole is technically known as Tolyltriazole IUPAC 4,5 methyl benzotriazole. It can also be identified as 4,5 methyl benzotriazole, tolutriazole, TTA, and TTZ.

Benzotriazole is technically known as IUPAC 1,2,3-Benzotriazole. It can also be identified as 1,2,3-Benzotriazole, 1,2-Aminozophenylene, lH-Benzotriazole, and BTA.

[8] *See* 19 CFR 351.309; *see also* 19 CFR 351.303 (for general filing requirements).

[9] *See Temporary Rule Modifying AD/CVD Service Requirements Due to COVID–19; Extension of Effective Period,* 85 FR 41363 (July 10, 2020).

[10] *See* Botao's Letter, ''Certain Corrosion Inhibitors from the People's Republic of China: Request to Extend Final Determination,'' dated August 25, 2020.

[11] *See* Delian's Letter, ''Corrosion Inhibitors from China; A–570–122; Request to Extend the Final Determination,'' dated August 27, 2020.

[12] *See* Petitioner's Letter, ''Certain Corrosion Inhibitors from the People's Republic of China: Petitioner's Request for Postponement of Final Determination,'' dated August 28, 2020.

All forms of tolyltriazole and benzotriazole, including but not limited to flakes, granules, pellets, prills, needles, powder, or liquids, are included within the scope of this investigation.

The scope includes tolyltriazole/sodium tolyltriazole and benzotriazole/sodium benzotriazole that are combined or mixed with other products. For such combined products, only the tolyltriazole/sodium tolyltriazole and benzotriazole/sodium benzotriazole component is covered by the scope of this investigation. Tolyltriazole and sodium tolyltriazole that have been combined with other products is included within the scope, regardless of whether the combining occurs in third countries.

Tolyltriazole, sodium tolyltriazole, benzotriazole and sodium benzotriazole that is otherwise subject to this investigation is not excluded when commingled with tolyltriazole, sodium tolyltriazole, benzotriazole, or sodium benzotriazole from sources not subject to this investigation. Only the subject merchandise component of such commingled products is covered by the scope of this investigation.

A combination or mixture is excluded from this investigation if the total tolyltriazole or benzotriazole component of the combination or mixture (regardless of the source or sources) comprises less than 5 percent of the combination or mixture, on a dry weight basis.

Notwithstanding the foregoing language, a tolyltriazole or benzotriazole combination or mixture that is transformed through a chemical reaction into another product, such that, for example, the tolyltriazole or benzotriazole can no longer be separated from the other products through a distillation or other process is excluded from this investigation.

Tolyltriazole has the Chemical Abstracts Service (CAS) registry number 299385–43–1. Tolyltriazole is classified under Harmonized Tariff Schedule of the United States (HTSUS) subheading 2933.99.8220.

Sodium Tolyltriazole has the CAS registry number 64665–57–2 and is classified under HTSUS subheading 2933.99.8290.

Benzotriazole has the CAS registry number 95–14–7 and is classified under HTSUS subheading 2933.99.8210.

Sodium Benzotriazole has the CAS registry number 15217–42–2. Sodium Benzotriazole is classified under HTSUS subheading 2933.99.8290.

Although the HTSUS subheadings and CAS registry numbers are provided for convenience and customs purposes, the written description of the scope of this investigation is dispositive.

Appendix II

List of Topics Discussed in the Preliminary Decision Memorandum

I. Summary
II. Background
III. Period of Investigation
IV. Scope Comments
V. Discussion of the Methodology
VI. Adjustment Under Section 777(A)(F) of the Act
VII. Adjustment to Cash Deposit Rate for Export Subsidies
VIII. Conclusion

[FR Doc. 2020–20010 Filed 9–9–20; 8:45 am]

BILLING CODE 3510–DS–P

DEPARTMENT OF COMMERCE

National Institute of Standards and Technology

Visiting Committee on Advanced Technology; Meeting

AGENCY: National Institute of Standards and Technology, Department of Commerce.

ACTION: Notice of open meeting.

SUMMARY: National Institute of Standards and Technology (NIST)'s Visiting Committee on Advanced Technology (VCAT or Committee) will meet on Tuesday, October 20, 2020, from 10:00 a.m. to 5:00 p.m. Eastern Time.

DATES: The VCAT will meet on Tuesday, October 20, 2020, from 10:00 a.m. to 5:00 p.m. Eastern Time.

ADDRESSES: The meeting will be a virtual meeting via webinar. Please note admittance instructions under the **SUPPLEMENTARY INFORMATION** section of this notice.

FOR FURTHER INFORMATION CONTACT: Stephanie Shaw, VCAT, NIST, 100 Bureau Drive, Mail Stop 1060, Gaithersburg, Maryland 20899–1060, telephone number 301–975–2667. Ms. Shaw's email address is *stephanie.shaw@nist.gov.*

SUPPLEMENTARY INFORMATION: *Authority:* 15 U.S.C. 278, as amended, and the Federal Advisory Committee Act, as amended, 5 U.S.C. App.

Pursuant to the Federal Advisory Committee Act, as amended, 5 U.S.C. App., notice is hereby given that the VCAT will meet on Tuesday, October 20, 2020, from 10:00 a.m. to 5:00 p.m. Eastern Time. The meeting will be open to the public. The VCAT is composed of not fewer than 9 members appointed by the NIST Director, eminent in such fields as business, research, new product development, engineering, labor, education, management consulting, environment, and international relations. The primary purpose of this meeting is for the VCAT to review and make recommendations regarding general policy for NIST, its organization, its budget, and its programs within the framework of applicable national policies as set forth by the President and the Congress. The agenda will include an update on major programs at NIST including a programmatic update, an update on NIST operations and impacts regarding the COVID–19 pandemic, strategic plan implementations, and NIST's role in America's innovation ecosystem, as well as its efforts to modernize technology transfer. The agenda may change to accommodate Committee business. The final agenda will be posted on the NIST website at *http://www.nist.gov/director/vcat/agenda.cfm.*

Individuals and representatives of organizations who would like to offer comments and suggestions related to the Committee's business are invited to request a place on the agenda. Approximately one-half hour will be reserved for public comments and speaking times will be assigned on a first-come, first-serve basis. The amount of time per speaker will be determined by the number of requests received but, is likely to be about 3 minutes each. The exact time for public comments will be included in the final agenda that will be posted on the NIST website at *http://www.nist.gov/director/vcat/agenda.cfm.* Questions from the public will not be considered during this period. Speakers who wish to expand upon their oral statements, those who had wished to speak but could not be accommodated on the agenda, and those who were unable to attend via webinar are invited to submit written statements to Stephanie Shaw at *stephanie.shaw@nist.gov.*

All participants will be attending via webinar and must contact Ms. Shaw at *stephanie.shaw@nist.gov* by 5:00 p.m. Eastern Time, Wednesday, October 14, 2020 for detailed instructions on how to join the webinar.

Kevin A. Kimball,
Chief of Staff.

[FR Doc. 2020–19933 Filed 9–9–20; 8:45 am]

BILLING CODE 3510–13–P

BUREAU OF CONSUMER FINANCIAL PROTECTION

Supervisory Highlights, Issue 22 (Summer 2020)

AGENCY: Bureau of Consumer Financial Protection.

ACTION: Supervisory Highlights.

SUMMARY: The Bureau of Consumer Financial Protection (Bureau) is issuing its twenty second edition of Supervisory Highlights. In this issue of Supervisory Highlights, we report examination findings in the areas of consumer reporting, debt collection, deposits, fair lending, and mortgage servicing that were completed between September 2019 and December 2019. The report does not impose any new or different

legal requirements, and all violations described in the report are based only on those specific facts and circumstances noted during those examinations.

DATES: The Bureau released this edition of the Supervisory Highlights on its website on September 4, 2020.

FOR FURTHER INFORMATION CONTACT: Jaclyn Sellers, Counsel, at (202) 435–7449. If you require this document in an alternative electronic format, please contact *CFPB_Accessibility@cfpb.gov.*

SUPPLEMENTARY INFORMATION:

1. Introduction

The Consumer Financial Protection Bureau (Bureau) is committed to a consumer financial marketplace that is free, innovative, competitive, and transparent, where the rights of all parties are protected by the rule of law, and where consumers are free to choose the products and services that best fit their individual needs. To effectively accomplish this, the Bureau remains committed to sharing with the public key findings from its supervisory work to help industry limit risks to consumers and comply with Federal consumer financial law.

The findings included in this report cover examinations in the areas of consumer reporting, debt collection, deposits, fair lending, and mortgage servicing that were completed between September 2019 and December 2019.[1]

It is important to keep in mind that institutions are subject only to the requirements of relevant laws and regulations. The information contained in *Supervisory Highlights* is disseminated to help institutions better understand how the Bureau examines institutions for compliance with those requirements. This document does not impose any new or different legal requirements. In addition, the legal violations described in this and previous issues of *Supervisory Highlights* are based on the particular facts and circumstances reviewed by the Bureau as part of its examinations. A conclusion that a legal violation exists on the facts and circumstances described here may not lead to such a finding under different facts and circumstances.

We invite readers with questions or comments about the findings and legal analysis reported in *Supervisory Highlights* to contact us at *CFPB_Supervision@cfpb.gov.*

[1] This time frame refers to the Supervisory Observations section only.

2. Supervisory Observations

Recent supervisory observations are reported in the areas of consumer reporting, debt collection, deposits, fair lending, and mortgage servicing.

2.1 Consumer Reporting

Entities that obtain or use consumer reports from consumer reporting companies (CRCs),[2] or that furnish information to CRCs for inclusion in consumer reports, play a vital role in the consumer reporting process. They are subject to several requirements under the Fair Credit Reporting Act (FCRA)[3] and its implementing regulation, Regulation V,[4] including the requirement to only obtain or use reports for a permissible purpose, and to furnish data subject to the relevant accuracy and dispute handling requirements. In one or more recent furnishing reviews, examiners found deficiencies in user and furnisher compliance with FCRA permissible purpose, accuracy, and dispute investigation requirements.

2.1.1 Prohibition Against Using or Obtaining Consumer Reports Without a Permissible Purpose

The FCRA prohibits a person from using or obtaining a consumer report unless the consumer report is obtained for a purpose authorized by the FCRA.[5] This prohibition protects the privacy of consumers and prevents the potential negative impact of certain inquiries. Examiners found that one or more lenders obtained consumers' credit reports without a permissible purpose. In reviewing files for compliance with permissible purpose requirements, examiners found that the lenders' employees obtained consumers' credit reports from a CRC without first establishing that the lenders had a permissible purpose to obtain the report under the FCRA. After identification of these issues, one or more lenders revised permissible purpose policies, procedures, and training materials. While consumer consent is not required by the FCRA when a lender has another permissible purpose to obtain the consumer's report, one or more mortgage lenders decided to require that the lender's employees document consumer consent prior to obtaining the consumers' credit reports, as an additional precaution to ensure that the lender had a permissible purpose to obtain the consumers' reports.

2.1.2 Furnisher Duty To Provide Notice of Delinquency of Accounts

The FCRA requires furnishers of information regarding delinquent accounts to report the date of delinquency to the CRC within 90 days.[6] The FCRA specifies that the date of first delinquency reported by the furnisher ''shall be the month and year of the commencement of the delinquency on the account that immediately preceded the action.''[7]

In one or more examinations of third-party debt collection furnishers, examiners found that the furnishers failed to establish and follow reasonable procedures to obtain the actual date of first delinquency from their clients. Instead, they furnished a date they knew or had reason to believe was an incorrect date of first delinquency. The third-party debt collection furnishers were furnishing information about cable, satellite, and telecommunications accounts. The furnishers reported, as the date of first delinquency, the date that the consumer's service was disconnected, despite telecommunications companies routinely disconnecting service several months after the first missed payment that commenced the delinquency. In addition, in one or more examinations of third-party debt collection furnishers, examiners found the furnisher provided the charge-off date as the date of first delinquency, which is often several months after the commencement of delinquency. Subsequent to these findings, one or more furnishers ceased operations.

2.1.3 Duty To Conduct Reasonable Investigation of Disputes

For disputes filed directly with furnishers, Regulation V requires furnishers to conduct a reasonable investigation with respect to the disputed information and review all relevant information provided by the consumer with the dispute notice.[8] Similarly, for indirect disputes filed with CRCs, the FCRA requires that, upon receiving notice of the dispute from the CRC, the furnisher must conduct an investigation with respect to the disputed information and review all relevant information provided by the

[2] The term ''consumer reporting company'' means the same as ''consumer reporting agency,'' as defined in the Fair Credit Reporting Act, 15 U.S.C. 1681a(f), including nationwide consumer reporting agencies as defined in 15 U.S.C. 1681a(p) and nationwide specialty consumer reporting agencies as defined in 15 U.S.C. 1681a(x).

[3] 15 U.S.C. 1681 *et seq.*

[4] 12 CFR part 1022.

[5] 15 U.S.C. 1681b(f).

[6] 15 U.S.C. 1681s–2(a)(5)(A). This provision applies to accounts being placed for collection, charged to profit or loss, or subjected to similar action.

[7] *Id.*

[8] 12 CFR 1022.43(e)(1–2).

CRC.[9] In one or more examinations, examiners found that, for both direct and indirect disputes, the furnishers failed to review underlying account information and documentation, account history notes, or dispute-related correspondence provided by the consumer to assess what reasonable investigative steps would be necessary. Inadequate staffing and high daily dispute resolution requirements contributed to the furnishers' failure to conduct reasonable investigations. As with the findings described above in section 2.1.2, subsequent to these findings, one or more furnishers ceased operations.

2.2 Debt Collection

The Bureau has the supervisory authority to examine certain entities that engage in consumer debt collection activities, including nonbanks that are larger participants in the consumer debt collection market.[10] Recent examinations of larger participant debt collectors identified one or more violations of the Fair Debt Collection Practices Act (FDCPA).

2.2.1 False Litigation Threats and Misrepresentations Regarding Litigation

Section 807(5) of the FDCPA prohibits ''[t]he threat to take any action that cannot legally be taken or that is not intended to be taken.'' [11] Section 807(10) prohibits ''[t]he use of any false representation or deceptive means to collect or attempt to collect any debt . . . .'' [12] Examiners found that one or more debt collectors falsely threatened consumers with lawsuits that the collectors could not legally file or did not intend to file, in violation of section 807(5). Examiners also determined that one or more debt collectors made false representations regarding the litigation process and a consumer's obligations in the event of litigation, in violation of section 807(10). In response to these findings, the debt collectors are making changes to their training, scripts, monitoring, and other compliance processes.

2.2.2 False Implication That Debt Could Be Reported to CRCs

Section 807(10) of the FDCPA prohibits ''[t]he use of any false representation or deceptive means to collect or attempt to collect any debt . . . .'' [13] Examiners observed that one or more debt collectors made implied representations to consumers that they would report their debts to CRCs [14] if they were not paid by a certain date. The debt collectors did not report debts to CRCs for the relevant clients. Examiners concluded that the debt collectors' statements were false representations that violated section 807(10). In response to these findings, the debt collectors are making changes to their training and monitoring.

2.2.3 False Representation That Debt Collector Is a CRC

Section 807(16) of the FDCPA prohibits ''[t]he false representation or implication that a debt collector operates or is employed by a consumer reporting agency . . . .'' [15] Examiners observed that one or more debt collectors falsely represented or implied to consumers that they operated or were employed by CRCs in violation of section 807(16). In response to these findings, the debt collectors are making changes to their training and monitoring.

2.3 Deposits

The CFPB continues to examine banks for compliance with Regulation E,[16] which implements the Electronic Fund Transfer Act (EFTA). EFTA establishes a legal framework for the offering and use of electronic fund transfer services and remittance transfer services.[17] The CFPB also continues to review the deposits operations of the entities under its supervisory authority for compliance with relevant statutes and regulations, including Regulation DD,[18] which implements the Truth in Savings Act.[19]

2.3.1 Waivers of Consumers' Error Resolution and Stop Payment Rights and Financial Institutions' Liability

EFTA states that ''no writing or other agreement between a consumer and any other person may contain any provision which constitutes a waiver of any right conferred or cause of action created by this subchapter.'' [20] EFTA and Regulation E state that consumers have a right to have their claims of error investigated if their notice of error meets certain criteria.[21] As described below, the criteria does not include agreeing to ''cooperate'' with the financial institution's error investigation. EFTA and Regulation E together establish that consumers have a right to have a financial institution investigate their error subject only to the requirements set forth in EFTA and Regulation E.

Examiners found that one or more financial institutions required consumers to sign deposit account agreements that stated that the consumers would ''cooperate'' with the institution's investigation of any errors filed by the consumer. The ''cooperation'' included providing affidavits and notifying law enforcement authorities. By requiring consumers to ''cooperate'' with Regulation E error investigations and provide information beyond that which is required in EFTA and Regulation E, the financial institutions' agreements contained provisions that waived consumers' rights in violation of EFTA.

EFTA and Regulation E also provide consumers with rights to stop preauthorized payments.[22] Under EFTA, consumers have the right to stop payment, subject only to those limitations set forth in EFTA and Regulation E.[23] Regulation E contains a comprehensive list of actions consumers must take in order to make an effective request to stop payment.[24] The list does not include agreeing to indemnify and hold the financial institution harmless for costs that may arise from honoring the valid stop payment request or agreeing not to hold the institution liable if it is unable to stop payment due to inadvertence, accident, or oversight.

Examiners found that one or more financial institutions required consumers to sign stop payment request forms and deposit agreements in which the consumers agreed to indemnify and hold the institutions harmless for various claims and expenses arising from the institutions honoring stop payment requests. This included not holding the financial institutions liable if they were unable to stop the payment due to inadvertence, accident, or oversight. As this language requires more of consumers than EFTA and Regulation E allow, the stop payment forms and deposit agreements impermissibly waived consumers' rights in violation of, and waived the institutions' liability under, EFTA and Regulation E for certain failures to stop payment.[25]

In response to the examiners' findings, the financial institutions

[9] 15 U.S.C. 1681s–2(b)(1)(A)–(B).

[10] 12 CFR 1090.

[11] 15 U.S.C. 1692e(5).

[12] 15 U.S.C. 1692e(10).

[13] *Id.*

[14] As noted above in Footnote 2, the term ''consumer reporting company'' means the same as ''consumer reporting agency,'' as defined in the FCRA, 15 U.S.C. 1681a(f).

[15] 15 U.S.C. 1692e(16).

[16] 12 CFR 1005.

[17] 12 U.S.C. 1693.

[18] 12 CFR 1030.

[19] *Id.*

[20] 15 U.S.C. 1693l.

[21] 15 U.S.C. 1693f and 12 CFR 1005.11(b)(1).

[22] 15 U.S.C. 1693e and 12 CFR 1005.10(c).

[23] 15 U.S.C. 1693e and 1693l and 12 CFR 1005.10(c)(1).

[24] 12 CFR 1005.10(c)(1).

[25] 15 U.S.C. 1693h and 1693l.

revised their deposit agreements and stop payment forms to ensure they do not contain any waivers of rights in violation of EFTA.

2.3.2 Reliance on Incorrect Date To Assess Timeliness of EFT Error Notice

Regulation E requires that financial institutions comply with specific requirements with respect to qualifying oral or written notices of an EFT error. With respect to timing, EFTA and Regulation E require that the oral or written notice must be received by the institution ''no later than 60 days after the institution sends the periodic statement . . . on which the alleged error is first reflected.'' [26]

Examiners found that one or more financial institutions required that EFT notice errors relating to ACH transactions be received within 60 days of the date of the transactions. For claims received after 60 days from the date of the transaction, the institutions treated the error notice as late, and would request permission from the merchant's bank to reverse the charges.

The financial institutions revised their policies on EFT error notice processing to comply with the Regulation E timing requirements.

2.3.3 Violation of Error Results Notice Requirements

Both section 908(a) of EFTA and Regulation E require a financial institution investigating an alleged EFT error to communicate to consumers, among other elements, (1) the investigation determination; and (2) an explanation of the determination when it determines that no error or a different error occurred within its report of results.[27]

To give purpose to both obligations, the meaning of an ''explanation'' is not synonymous with that of a ''determination.'' Financial institutions must go beyond just providing the findings to actually explain or give the reasons for or cause of those findings.

Examiners found that one or more financial institutions violated Regulation E by failing to provide an explanation of its findings within the report of results. In addition, examiners found that one or more financial institutions violated Regulation E by providing an inaccurate or irrelevant response to the consumer when it determined that no error or a different error occurred.[28]

Regulation E also requires financial institutions to note, in the report of results, the consumer's right to request the documents that the institution relied on in making its determination when the institution determines no error or a different error occurred.[29] Examiners found that one or more financial institutions' reports of results letters sent to consumers after determining that no error or a different error occurred, were missing the required notice of the consumer's right to request the documents that the institution relied on in making its determination, as required by Regulation E.[30]

In response to the examiners' findings, the financial institutions undertook a revision of its report of results templates used when the financial institutions determine no error or different error occurred to ensure that the letter provides: (a) The determination; (b) an explanation of the financial institution's findings; and, (c) a statement noting the consumer's right to request the documents that the financial institutions relied on in making its determination, as required by Regulation E.[31]

2.3.4 Failure To Fulfill Advertised Bonus Offer

Regulation DD requires that advertisements of deposit accounts not mislead, be inaccurate, or misrepresent the financial institution's deposit contract.[32]

Examiners found that one or more financial institutions advertised bonuses for consumers who opened an account at the financial institutions and met certain requirements that the advertisement specified. These financial institutions failed to provide the promised bonuses in instances where consumers met the requirements. The financial institutions did not have appropriate quality control and monitoring procedures to ensure all eligible consumers received the bonus. Therefore, the advertisement of bonus offer was misleading and inaccurate in violation of Regulation DD.

In response to the examiners' findings, the financial institutions enhanced their account opening training, as well as monitoring and quality control procedures, to ensure that consumer accounts were correctly coded as bonus-eligible and that all consumers eligible for the advertised bonuses received them.

2.4 Fair Lending

The Bureau's fair lending supervision program assesses compliance with the Equal Credit Opportunity Act (ECOA) [33] and its implementing regulation, Regulation B,[34] as well as the Home Mortgage Disclosure Act (HMDA) [35] and its implementing regulation, Regulation C,[36] at banks and nonbanks over which the Bureau has supervisory authority. Examiners found one or more lenders engaged in violations of ECOA and Regulation B.

2.4.1 Redlining

Regulation B prohibits discouragement of ''applicants or prospective applicants'' and it also states: ''A creditor shall not make any oral or written statement, in advertising or otherwise, to applicants or prospective applicants that would discourage on a prohibited basis a reasonable person from making or pursuing an application.'' [37] The Official Interpretations of Regulation B also explains that Regulation B ''covers acts or practices directed at prospective applicants that could discourage a reasonable person, on a prohibited basis, from applying for credit.'' [38]

In the course of conducting supervisory activity of bank and nonbank mortgage lenders, examiners have observed that one or more lenders violated ECOA and Regulation B, intentionally redlining majority-minority neighborhoods in two Metropolitan Statistical Areas (MSAs) by engaging in acts or practices directed at prospective applicants that may have discouraged reasonable people from applying for credit.

Examiners determined that the lenders used marketing that would discourage reasonable persons on a prohibited basis from applying to the lenders for a mortgage loan. First, the lenders advertised in a publication with a wide circulation in the MSAs, on a weekly basis, for two years. These ads prominently featured a white model. Second, the lenders' marketing materials, which were intended to be distributed to consumers by the lenders' retail loan originators, featured almost exclusively white models. Third, the lenders included headshots of the lenders' mortgage professionals in nearly all its open house marketing materials, and in almost all these

[26] 12 CFR 1005.11(b)(1)(i).

[27] 12 U.S.C. 1693f(a) and 1693f(d) and 12 CFR 1005.11(d)(1).

[28] *Id.*

[29] *Id.*

[30] *Id.*

[31] *Id.*

[32] 12 CFR 1030.8(a)(1).

[33] 12 U.S.C. 1691.

[34] 12 CFR 1002.

[35] 12 U.S.C. 2801.

[36] 12 CFR 1003.

[37] 12 CFR 1002.4(b).

[38] 12 CFR part 1002, supp. I, para. 4(b)–1.

materials, the headshots showed professionals who appeared to be white.

The statistical analysis of the HMDA data and U.S. Census data provided evidence regarding the lenders' intent to discourage prospective applicants from majority-minority neighborhoods. General and refined peer analyses showed that the lenders received significantly fewer applications from majority-minority and high-minority neighborhoods [39] relative to other peer lenders in the MSAs. Also, the lenders' direct marketing campaign that focused on majority-white areas in the MSAs provided additional evidence of the lenders' intent to discourage prospective applicants on a prohibited basis.

In response to the examination findings, lenders implemented outreach and marketing programs focused on increasing their visibility among consumers living in or seeking credit in majority-minority census tracts in the MSAs. One or more lenders also are improving compliance management systems, including board and management oversight, monitoring and/or audit programs, and handling of consumer complaints.

2.4.2 Failure To Consider Public Assistance Income

The ECOA states that it is ''unlawful for any creditor to discriminate against any applicant, with respect to any aspect of a credit transaction . . . because all or part of the applicant's income derives from any public assistance program.'' [40] The Official Interpretation of Regulation B defines ''public assistance program'' as follows: ''Any Federal, State, or local governmental assistance program that provides a continuing, periodic income supplement, whether premised on entitlement or need, is 'public assistance' for purposes of the regulation. The term includes (but is not limited to) Temporary Aid to Needy Families, food stamps, rent and mortgage supplement or assistance programs, social security and supplemental security income, and unemployment compensation.'' [41] Regulation B allows a creditor to ''consider the amount and probable continuance of any income in evaluating an applicant's creditworthiness.'' [42] However, the Official Interpretation further provides that ''[i]n considering the separate components of an applicant's income, the creditor may not automatically discount or exclude from consideration any protected income. Any discounting or exclusion must be based on the applicant's actual circumstances.'' [43]

Examiners found that one or more lenders violated ECOA and Regulation B by maintaining a policy and practice that excluded certain forms of public assistance income, without considering the applicant's actual circumstances including unemployment compensation and SNAP benefits, commonly known as food stamps, from consideration in determining a borrower's eligibility for mortgage modification programs. One or more lenders acknowledged that they excluded certain types of public assistance income from income calculations when evaluating loss mitigation applications, even though the lenders did not have written policies directing the practice. Examiners identified several instances whereby the applicant listed certain forms of public assistance income in the loss mitigation application. In each instance, the lenders excluded the public assistance income from their income calculations and, in certain instances, the applicant was denied a loss mitigation option due to insufficient income.

In response to the examination findings, the lenders updated policies and procedures and enhanced training to ensure that their practices concerning public assistance income comply with ECOA and Regulation B. In addition, lenders identified borrowers who, due to their reliance on certain forms of public assistance income, were denied mortgage modifications or otherwise harmed. The lenders provided such borrowers with financial remuneration and an appropriate mortgage modification.

2.5 Mortgage Servicing

Recent mortgage servicing examinations have identified various Regulation Z and Regulation X violations. These include violations of Regulation Z requirements to provide consumers in bankruptcy with periodic statements and violations of Regulation X provisions related to force-placed insurance and escrow accounts. In the context of loan transfers, examiners identified violations of Regulation X requirements to provide servicing transfer notices and exercise reasonable diligence to complete a loss mitigation application; violations of FDCPA requirements to provide debt validation notices; and violations of Regulation Z requirements to credit payments as of the date of receipt and provide mortgage loan ownership transfer disclosures. Additionally, examiners identified one or more ECOA violations for failure to consider certain forms of public assistance income when considering borrowers for mortgage modification programs (that violation is summarized in the fair lending section of this issue).

2.5.1 Failure To Provide Consumers in Bankruptcy With Periodic Statements

In general, Regulation Z requires servicers to provide consumers with closed-end mortgage loans with periodic statements that meet certain requirements.[44] Prior to April 2018, servicers were not required to provide periodic statements to consumers in bankruptcy. After April 2018, servicers are required to provide periodic statements when any consumer on the mortgage loan is in bankruptcy, unless an exemption is met.[45]

Examiners found that one or more servicers violated Regulation Z by failing to provide periodic statements when a consumer on the loan was in Chapter 12 or Chapter 13 Bankruptcy. Examiners found that causes included system limitations and failure to reconcile accounting records. The servicers contracted with third parties to maintain records regarding costs related to bankruptcy. However, these records were not reconciled with the servicers' systems of record, so the servicers were unable to provide accurate information about the total amount due, payment history, costs, and fees associated with the account. Instead of reconciling the amounts to enable them to send accurate statements, for a period of time servicers did not send statements when a consumer was in in Chapter 12 or Chapter 13 Bankruptcy. In response to these findings, the servicers developed a process to reconcile accounting records and began sending periodic statements to consumers in Chapter 12 or Chapter 13 Bankruptcy in accordance with the regulation.

2.5.2 Failure To Have a Reasonable Basis for Charging Borrowers for Force-Placed Insurance

Under Regulation X, a servicer may not assess a borrower a premium charge or fee for force-placed insurance unless the servicer has a ''reasonable basis'' to believe that the borrower failed to maintain required hazard insurance.[46]

[39] Examination teams defined majority-minority areas as >50% minority and high-minority areas as >80% minority.

[40] 15 U.S.C. 1691(a)(2).

[41] 12 CFR part 1002, supp. I, para. 2(z)–(3).

[42] 12 CFR 1002.6(b)(5).

[43] 12 CFR part 1002, supp. 1, para. 6(b)(5)–(3)(ii); *see also id.* at 6(b)(5)–(1) (''A creditor must evaluate income derived from . . . public assistance on an individual basis. . . .'').

[44] 12 CFR 1026.41(a).

[45] *See* 12 CFR 1026.41(e)(5); 81 FR 72160 (Oct. 19, 2016), available at: *https://www.govinfo.gov/content/pkg/FR-2016-10-19/pdf/2016-18901.pdf.*

[46] 12 CFR 1024.37(b).

Examiners found that one or more servicers violated Regulation X by charging borrowers for force-placed insurance without a reasonable basis for believing that the consumer had not maintained required hazard insurance. Examiners found that in some instances borrowers had provided their servicers with proof of required hazard insurance policies, either directly or through their insurance companies. However, the servicers failed to update their systems of record to reflect receipt of this information and subsequently charged borrowers for force-placed insurance. Examiners observed that this violation was caused by inadequate procedures and lack of adequate staffing. In other instances, the servicers received a bill for the borrowers' hazard insurance but did not assign it to the proper account. The servicers later charged borrowers for force-placed insurance, despite not having a reasonable basis to believe that the borrowers lacked hazard insurance. Examiners attributed this violation to a weakness in service provider oversight. In response to these findings, the servicers are improving service provider oversight or hiring new service providers to manage force-placed insurance charges.

2.5.3 Failure To Timely Refund All Force-Placed Insurance Charges for Overlapping Coverage

Regulation X generally requires a servicer to cancel force-placed insurance and refund force-placed insurance premium charges for any period where a consumer provides evidence of overlapping insurance coverage within 15 days of receiving the evidence of coverage.[47]

Examiners found that one or more servicers violated Regulation X by failing to cancel force-placed insurance and refund charges within 15 days of receiving evidence of overlapping insurance coverage. Examiners observed that this was caused by failure to process proof of insurance and insufficient staffing. In response to these findings, the servicers are improving management of force-placed insurance programs to ensure timely cancellation of force-placed insurance and timely refunds to borrowers.

2.5.4 Permitted Repayment Options in Annual Escrow Statements

Under Regulation X, servicers generally must annually complete an escrow analysis and determine the ''target balance'' in an escrow account for the next escrow computation year.[48] If the escrow account balance is below the ''target balance,'' there is a ''shortage;'' if the consumer's escrow account balance is negative, then there is a ''deficiency.''[49] Regulation X provides specific permitted options for servicers as to the treatment of shortages and deficiencies. Which options are available depends in part on the extent of the shortage or deficiency.[50] For example, for shortages equal to or greater than one month's escrow account payment, the servicer must either (1) allow the shortage to exist and do nothing to change it; or (2) require repayment of the shortage in equal monthly payments over at least a 12-month period.[51] For deficiencies equal to or greater than one month's escrow account payment, the servicer must either (1) allow the deficiency to exist and do nothing to change it; or (2) require repayment of the deficiency in equal monthly payments over a period of 2 months or more.[52] Regulation X also requires servicers to send borrowers annual escrow account statements which must include ''[a]n explanation of how any shortage or deficiency is to be paid by the borrower.''[53]

Examiners found that one or more servicers sent consumers annual escrow account statements which included options for repayment of shortages and deficiencies that are not enumerated in Regulation X. Specifically, for borrowers with either shortages or deficiencies equal to or greater than one month's escrow account payment, servicers listed two options borrowers could choose for repayment: (1) Equal monthly payments over a 12-month period or (2) a lump sum payment. The first option is a permitted repayment option under Regulation X, while the second option is not.[54] Regulation X requires that annual escrow account statements include an explanation of how shortages or deficiencies are to be paid by borrowers.[55] Because the enumerated repayment options are exclusive, the servicers violated the regulatory requirements by sending disclosures that provided borrowers with repayment options that they cannot require under Regulation X.[56]

In response to these findings, the servicers are amending their annual escrow disclosures to only include repayment options they are permitted to require under Regulation X.

2.5.5 Violations After Servicing Transfers

Examiners have identified various violations after servicing transfers, including: Failure to provide an accurate effective date for the transfer of servicing in the required notice of servicing transfer;[57] failure to exercise reasonable diligence to obtain documents and information necessary to complete a loss mitigation application;[58] failure to credit a periodic payment as of the date of receipt;[59] and, when a servicer is acting as a debt collector, failure to provide a validation notice within 5 days of the initial communication with the borrower when such notice is required.[60]

For example, in the context of loans with loss mitigation applications in process at the time of the transfer, certain applications were virtually complete, but some transferee servicers asked borrowers to submit new applications, leading examiners to conclude that servicers had failed to exercise reasonable diligence to obtain the information necessary to complete these loss mitigation applications as the regulation requires. Examiners found that these violations were caused by errors during the onboarding process as well as inadequate policies and procedures. In response to these findings, the servicers increased attention to due diligence during servicing transfers and improved relevant policies and procedures to prevent violations in future servicing transfers.

2.5.6 Failure To Provide Loan Ownership Transfer Disclosures

Regulation Z generally requires that when ownership of a loan transfers, the new owner must send a disclosure with required content to consumers.[61]

Examiners found that one or more servicers failed to send consumers the mortgage transfer disclosure after acquiring the loans, in violation of Regulation Z. In response to these findings, the servicers are reviewing the contracts that assign responsibilities between transferees and transferors and reinforcing the regulatory requirements internally; servicers who violated the rule will send mortgage transfer

[47] 12 CFR 1024.37(g)(1) & (2).

[48] 12 CFR 1024.17(c)(3).

[49] 12 CFR 1024.17(b).

[50] 12 CFR 1024.17(f)(3) & (4).

[51] 12 CFR 1024.17(f)(3)(ii).

[52] 12 CFR 1024.17(f)(4)(ii).

[53] 12 CFR 1024.17(i)(1)(vii).

[54] *See* 12 CFR 1024.17(f)(3) & (4).

[55] 12 CFR 1024.17(i)(1)(vii).

[56] *See* 12 CFR 1024.17(i)(1)(vii).

[57] 12 CFR 1024.33(b)(4)(i).

[58] 12 CFR 1024.41(b)(1).

[59] 12 CFR 1026.36(c)(1)(i).

[60] 15 U.S.C. 1692g(a). The notice is required unless the information is contained in the initial communication or the consumer has paid the debt.

[61] 12 CFR 1026.39(b).

disclosures after future transfers in accordance with Regulation Z.

2.6 Payday Lending

The Bureau's Supervision program covers entities that offer or provide payday loans. Examinations of these lenders identified deceptive acts or practices and violations of Regulation Z.

2.6.1 Misleading Representations About the Ability To Apply for a Loan Online

Sections 1031 and 1036(a)(1)(b) of the Consumer Financial Protection Act (CFPA) prohibit a covered person such as a payday lender from engaging in any unfair, deceptive, or abusive act or practice.[62] A representation, omission, or practice is deceptive if: (1) The representation, omission, or practice misleads or is likely to mislead the consumer; (2) the consumer's interpretation of the representation, omission, or practice is reasonable under the circumstances; and (3) the misleading representation, omission, or practice is material.[63]

Examiners found that one or more lenders engaged in deceptive acts or practices in violation of the CFPA when they represented on websites and in mailed advertising that consumers could apply for payday loans online. Examiners found the representations misled or were likely to mislead consumers. Although consumers could enter limited information online, the lenders required them to visit physical storefront locations to re-enter information and complete the loan application process. A consumer could reasonably interpret the express and indirect representations to mean they could complete the application process online. The representations were material because they were likely to affect consumer decisioning. For example, a consumer could have chosen to apply with a different lender who had a faster or otherwise more convenient process. In response to examination findings, the entity or entities ceased misleading advertising on websites and in mailed advertising, and implemented enhanced advertising policies and procedures and oversight.

2.6.2 False Representation That No Credit Check Will Be Conducted

Examiners observed one or more lenders engaged in deceptive acts or practices in violation of the CFPA when they falsely represented on proprietary websites, social media, and other advertising that they would not conduct a credit check. In fact, the lenders used consumer reports from at least one CRC in determining whether to extend credit. It was reasonable for a consumer to interpret the representations as meaning that the lenders would not check a consumer's credit history when deciding whether to extend credit, and the representations were material because they were likely to affect consumers' conduct with respect to loans. Prospective customers may have had credit history concerns and made a different choice. In response to the examination findings, one or more lenders ceased making misleading representations online and elsewhere, and implemented enhanced advertising policies and procedures and oversight.

2.6.3 False Threats of Lien Placement or Asset Seizure

Examiners found one or more lenders engaged in deceptive acts or practices by sending collection letters that falsely threatened lien placement or asset seizure if consumers did not make payments, although the entities did not take those measures. Moreover, certain consumer assets may have been exempt from lien or seizure under State law. It was reasonable for consumers to interpret the representations to mean that the entities could and would take such measures, and the statements were material because consumers may have made different payment choices had they known the representations were false. In response to the examination findings, one or more entities ceased including the erroneous information in collection letters.

2.6.4 False Threats of Being Subject to Late Payment Fee

Examiners found one or more lenders engaged in deceptive acts or practices by sending collection letters that falsely threatened to charge late fees if consumers did not make payments, even though the entities did not charge late fees. A consumer could reasonably interpret the representations as meaning that the entities would charge late fees absent payment. Such threats were material, because they were likely to affect consumers' payment choices. In response to the findings, one or more lenders ceased including the false statements in collection letters.

2.6.5 Failure To Make Triggering Disclosures in Payday Loan Advertisements

Regulation Z requires advertisements for closed-end credit that contain certain triggering terms, such as the amount of any finance charge, to disclose additional terms.[64] Required additional advertising disclosures include the annual percentage rate (APR) and terms of repayment.[65]

Examiners observed that one or more lenders failed to provide required additional disclosures in advertisements offering ''free'' loans to new customers. An advertisement of the total cost of consumer credit is an advertisement of the dollar amount of a finance charge,[66] a triggering term.[67] Accordingly, the entities were obligated to provide additional advertising disclosures under Regulation Z. In response to the findings, one or more entities implemented enhanced advertising policies and procedures and oversight, and ensured that all applicable advertisements that contain triggering terms include required Regulation Z disclosures.

2.6.6 Not Actually Prepared To Offer Advertised Loan Term

Regulation Z also requires an advertisement for credit that states specific credit terms to state only those terms that actually are or will be arranged or offered by the creditor.[68] Examiners concluded that one or more entities violated Regulation Z when they advertised that a new customer's first payday loan would be free, even though the lenders were not actually prepared to offer the advertised term. Instead, the entities offered consumers one free week for loans lasting longer than one week, that featured considerable APRs. In response to the findings, one or more entities implemented enhanced advertising policies and procedures and oversight, and, ceased advertising loan terms that lenders were not actually prepared to offer, including that a consumer's first loan would be free.

3. Supervision Program Developments

3.1 COVID–19 Related Information and Guidance

3.1.1 Interagency Statement on Pandemic Planning

On March 6, 2020, the Federal Financial Institutions Examination Council (FFIEC) on behalf of its member agencies published updated guidance[69] identifying actions that financial institutions should take to minimize the potential adverse effects of a pandemic. The statement noted that financial

[62] 12 U.S.C. 5531, 5536(a)(1)(B).

[63] *See FTC Policy Statement on Deception,* appended to *In re Cliffdale Assoc., Inc.,* 103 F.T.C. 110, 174 (1984).

[64] 12 CFR 1026.24(d)(1).

[65] 12 CFR 1026.24(d)(2)(ii) and (iii).

[66] *See* 12 CFR 1026.4(a).

[67] 12 CFR 1026.24(d)(1)(iv).

[68] 12 CFR 1026.24(a).

[69] The statement can be found at: *https://www.federalreserve.gov/supervisionreg/srletters/SR2003a1.pdf.*

institutions should periodically review related risk management plans, including business continuity plans, to ensure that they are able to continue to deliver products and services in a wide range of scenarios with minimal disruption.

3.1.2 Joint Statement Encouraging Responsible Small-Dollar Lending in Response to COVID–19

On March 26, 2020, the Bureau along with the Board of Governors of the Federal Reserve Bank, the Federal Deposit Insurance Corporation, the National Credit Union Administration and the Office of the Comptroller of Currency (collective the Agencies) issued a joint statement [70] that encouraged banks, savings associations, and credit unions to offer responsible small-dollar loans to consumers and small businesses in response to COVID–19. The statement noted that loans should be offered in a manner that provides fair treatment of consumers, complies with applicable laws and regulations, and is consistent with safe and sound practices. The joint statement also encouraged lenders to work with borrowers who may experience unexpected circumstances and cannot repay a loan as structured.

3.1.3 CFPB Provides Flexibility During COVID–19 Pandemic

On March 26, 2020, the Bureau published three separate statements [71] noting its flexible approach during the pandemic. The Bureau announced that as of March 26, 2020, and until further notice the Bureau does not intend to cite in an examination or initiate an enforcement action against an entity for failure to submit to the Bureau:

- Quarterly submissions of HMDA data;
- annual submissions concerning agreements between credit card issuers and institutions of higher education;
- quarterly submission of consumer credit card agreements;
- collection of certain credit card price and availability information; and
- submission of prepaid account agreements and related information.

Entities should maintain records sufficient to allow them to make delayed submissions pursuant to future Bureau guidance.

The Bureau also announced that it will work with affected financial institutions in scheduling examinations and other supervisory activities to minimize disruption and burden. When conducting examinations and other supervisory activities and in determining whether to take enforcement action, the Bureau will consider the circumstances that entities may face as a result of the COVID–19 pandemic and will be sensitive to good-faith efforts demonstrably designed to assist consumers.

3.1.4 Statement on Supervisory and Enforcement Practices Regarding the Fair Credit Reporting Act and Regulation V in Light of the CARES Act

On April 1, 2020, the Bureau released a statement,[72] which outlined the responsibilities of CRCs and furnishers during the COVID–19 pandemic. The statement noted that the CARES Act requires lenders to report to CRCs that a consumer is current on their loans if the lender has provided the consumer with payment relief in certain circumstances. In addition, the Bureau noted temporary and targeted flexibility in its supervisory and enforcement approach for lenders and CRCs facing challenges as a result of the COVID–19 pandemic in the time they take to investigate disputes. The Bureau stated that it will consider a furnisher's or CRC's individual circumstances and does not intend to cite in an examination or bring an enforcement action against firms impacted by the pandemic who exceed the deadlines to investigate such disputes as long as they make good faith efforts during the pandemic to do so as quickly as possible. The Bureau also released FAQs on June 16, 2020, to help ensure that consumers receive the credit reporting protections required by the CARES Act.[73]

3.1.5 Joint Statement on Supervisory and Enforcement Practices Regarding the Mortgage Servicing Rules in Response to COVID–19 and the CARES Act

On April 3, 2020, the Agencies and the State financial regulators issued a joint policy statement [74] providing regulatory flexibility to enable mortgage servicers to work with struggling consumers affected by the COVID–19 emergency.[75] The statement informs servicers of the Agencies' flexible supervisory and enforcement approach during the COVID–19 emergency regarding certain communications to consumers required by the mortgage servicing rules.

The policy statement clarified that the agencies do not intend to take supervisory or enforcement action against mortgage servicers for:

- Delays in sending certain early intervention and loss mitigation notices and taking certain related actions required by the mortgage servicing rules, provided that servicers are making good faith efforts to provide these notices and take these actions within a reasonable time;
- failing to provide an acknowledgement notice within five days of receipt of an incomplete application, where the borrower enters certain short-term payment forbearance programs or short-term repayment plans, provided the servicer sends the acknowledgment notice before the end of the forbearance or repayment period; and
- delays in sending annual escrow statements, provided that servicers are making good faith efforts to provide these statements within a reasonable time.

3.1.6 Interagency Statement on Loan Modifications by Financial Institutions Working With Customers Affected by the Coronavirus

On April 7, 2020, the Agencies, in consultation with State financial regulators, issued an interagency statement [76] encouraging financial institutions to work constructively with borrowers affected by COVID–19 and providing additional information

[70] The statement can be found at: *https://files.consumerfinance.gov/f/documents/cfpb_interagency-statement_small-dollar-lending-covid-19_2020-03.pdf.*

[71] The three statements are: (1) Statement on Supervisory and Enforcement Practices Regarding Quarterly Reporting Under the Home Mortgage Disclosure Act; (2) Statement on Supervisory and Enforcement Practices Regarding Bureau Information Collections for Credit Card and Prepaid Account Issuers; and (3) Statement on Bureau Supervisory and Enforcement Response to COVID–19 Pandemic. The statements can be found at: *https://files.consumerfinance.gov/f/documents/cfpb_hmda-statement_covid-19_2020-03.pdf, https://files.consumerfinance.gov/f/documents/cfpb_data-collection-statement_covid-19_2020-03.pdf, https://files.consumerfinance.gov/f/documents/cfpb_supervisory-enforcement-statement_covid-19_2020-03.pdf.*

[72] The statement can be found at: *https://files.consumerfinance.gov/f/documents/cfpb_credit-reporting-policy-statement_cares-act_2020-04.pdf.*

[73] The FAQs can be found at: *https://files.consumerfinance.gov/f/documents/cfpb_fcra_consumer-reporting-faqs-covid-19_2020-06.pdf.*

[74] The statement can be found at: *https://www.federalreserve.gov/newsevents/pressreleases/files/bcreg20200403a1.pdf.*

[75] In conjunction with this statement, the Bureau published, ''Mortgage Servicing Rules FAQs Related to the COVID–19 Emergency.'' The FAQs can be found at: *https://files.consumerfinance.gov/f/documents/cfpb_mortgage-servicing-rules-covid-19_faqs.pdf.*

[76] The statement can be found at: *https://files.consumerfinance.gov/f/documents/cfpb_interagency-statement_loan-modifications-reporting-covid-19_2020-04.pdf.*

regarding accounting and reporting considerations for loan modifications.[77] The statement encouraged financial institutions to work with borrowers impacted by the coronavirus and promised not to criticize institutions for doing so in a safe-and-sound manner. It also highlighted that when working with borrowers, lenders and servicers should adhere to consumer protection requirements, including fair lending laws, to provide the opportunity for all borrowers to benefit from these arrangements. It stated that Agencies will consider various facts and circumstances when conducting supervisory work evaluating compliance during the relevant time period. Additionally, it stated that the Agencies do not expect to take a consumer compliance public enforcement action against an institution, provided that the circumstances were related to the national emergency and that the institution made good faith efforts to support borrowers and comply with the consumer protection requirements, as well as respond to any needed corrective action.

3.1.7 Treatment of Pandemic Relief Payments Under Regulation E and Application of the Compulsory Use Prohibition

On April 13, 2020, the Bureau issued an interpretive rule[78] to provide guidance to government agencies distributing aid to consumers in response to the COVID–19 pandemic.

The Bureau concluded that certain pandemic-relief payments are not ''government benefits'' for purposes of Regulation E and EFTA and are therefore not subject to the compulsory use prohibition in EFTA, if certain conditions are met.

Specifically, the Bureau interprets the term ''government benefit'' to exclude payments from Federal, State, or local governments if those payments are made:

1. To provide assistance to consumers in response to the COVID–19 pandemic or its economic impacts;

2. Outside of an already-established government benefit program;

3. On a one-time or otherwise limited basis; and

4. Without a general requirement that consumers apply to the agency to receive funds.

3.1.8 Interagency Statement on Appraisals and Evaluations for Real Estate Related Transactions Affected by the Coronavirus

On April 14, 2020, the Bureau, together with the Agencies, issued an interagency statement outlining flexibilities in industry appraisal standards and in appraisal regulations and described temporary changes to Fannie Mae and Freddie Mac appraisal standards.

3.1.9 Compliance Bulletin and Policy Guidance: Handling of Information and Documents During Mortgage Servicing Transfers (CFPB Bulletin 2020–02)

On April 24, 2020, the Bureau published a Bulletin[79] to provide mortgage servicers clarity, facilitate compliance, and prevent harm to consumers during the transfer of residential mortgages.

Regulation X imposes specific requirements on transferors and transferees to prevent harm to consumers resulting from servicing transfers, including requiring transferee servicers to maintain policies and procedures that are reasonably designed to ensure that the servicer can identify necessary documents or information that may not have been transferred by a transferor servicer and obtain such documents from the transferor servicer. The Bulletin listed some examples of servicer practices that the Bureau may consider as contributing to policies and procedures that are reasonably designed to achieve the objectives of these transfer requirements, including:

- Developing a servicing transfer plan that includes a communications plan, testing plan (for system conversion), a timeline with key milestones and an escalation plan for potential problems;
- Engaging in quality control work after a transfer of preliminary data to validate that the data on the transferee's system matches the data submitted by the transferor;
- Conducting a post-transfer review or debrief to determine effectiveness of the transfer plan and whether any gaps have arisen that require resolution;
- Monitoring consumer complaints and loss mitigation performance metrics; and
- Identifying any loans in default, active foreclosure and bankruptcy or any forbearance or other loss mitigation agreements entered in with the borrower.

The Bulletin also highlights the importance of data quality. To that end, it encourages servicers to adopt an industry data standard for mortgage records, called Mortgage Industry Standards Maintenance Organization standards.

The Bureau noted that it began developing the Bulletin well before the coronavirus pandemic, in consultation with interagency and intergovernmental partners. In light of the national emergency declared on March 13, 2020, the Bulletin sets forth that, if a servicing transfer is requested or required by a Federal regulator or by the security issuer of ''Government Loans'' (as defined in the CARES Act) during a specified time frame, the Bureau will take into consideration the challenges facing mortgage servicers due to COVID–19 and will focus any supervisory feedback for institutions on identifying issues, correcting deficiencies, and ensuring appropriate remediation for consumers.

3.1.10 CFPB Paves Way for Consumers Facing Financial Emergencies To Obtain Access to Mortgage Credit More Quickly

On April 29, 2020, the Bureau issued an interpretive rule clarifying that consumers can exercise their rights to modify or waive certain required waiting periods under the TILA–RESPA Integrated Disclosure Rule and Regulation Z rescission rules.[80] The Bureau also issued an FAQ document[81] that addresses when creditors must provide appraisals or other written valuations to mortgage applicants in order to expedite access to credit for consumers affected by the COVID–19 pandemic.

3.1.11 Amendments to the Remittance Rule and Statement on Supervisory and Enforcement Practices Regarding the Remittance Rule in Light of the COVID–19 Pandemic

On May 11, 2020, the Bureau issued a final rule amending the remittance rule.[82] Among its requirements, the remittance rule mandates that remittance transfer providers generally must disclose the exact exchange rate,

[77] This statement replaces one previously issued by the Agencies on March 22, 2020. The revised statement clarifies the interaction between the interagency statement issued on March 22, 2020, and the temporary relief provided by section 4013 of the CARES Act.

[78] The interpretative rule can be found at: *https://files.consumerfinance.gov/f/documents/cfpb_interpretive-rule_pandemic-relief-payments-reg-e.pdf* and at: *https://www.federalregister.gov/documents/2020/04/27/2020-08084/treatment-of-pandemic-relief-payments-under-regulation-e-and-application-of-the-compulsory-use.*

[79] The bulletin can be found at: *https://files.consumerfinance.gov/f/documents/cfpb_policy-guidance_mortgage-servicing-transfers_2020-04.pdf.* The bulletin is also available in the **Federal Register** at 85 FR 25281 (May 1, 2020).

[80] The interpretative rule can be found at: *https://files.consumerfinance.gov/f/documents/cfpb_tila-respa-integrated-disclosure_rescission-pandemic-interpretive-rule.pdf.*

[81] The FAQs can be found at: *https://files.consumerfinance.gov/f/documents/cfpb_mortgage-origination-rules_faqs-covid-19.pdf.*

[82] 12 CFR 1005.30 *et seq.*

the amount of certain fees, and the amount expected to be delivered to the recipient. The remittance rule also allows for insured institutions to estimate certain fees and exchange rate information under certain circumstances, but by statute, this provision expires in July 2020.

The amendments in the May 2020 rule, which will become effective in July of 2020, allow certain banks and credit unions to continue to provide estimates of the exchange rate and certain fees under certain conditions. The amendments also increase the safe harbor threshold that determines whether an entity makes remittance transfers in the normal course of its business and is subject to the rule. Under the amendments, entities making 500 or fewer transfers annually in the current and prior calendar years are not subject to the rule.

In April, the Bureau announced that it would take a flexible enforcement and supervisory approach in light of the expiration of the statutory temporary exception and the challenges the COVID–19 pandemic may cause insured institutions as they prepare to commence providing actual third-party fee and exchange rate information as of July 21, 2020.[83]

For international remittance transfers that occur on or after July 21, 2020 and before January 1, 2021, the Bureau will neither cite supervisory violations nor initiate enforcement actions against insured institutions for continuing to provide estimates to consumers under the temporary exception, instead of actual amounts.

3.1.12 Statement on Supervisory and Enforcement Practices Regarding Regulation Z Billing Error Resolution Timeframes in Light of the COVID–19 Pandemic

On May 13, 2020, the Bureau issued a statement informing creditors of the Bureau's flexible supervisory and enforcement approach during the pandemic regarding the timeframe within which creditors complete their investigations of consumers' billing error notices.[84] Specifically, in evaluating a creditor's compliance with the maximum timeframe for billing error resolution set forth in Regulation Z, the Bureau intends to consider the creditor's circumstances. The Bureau does not intend to cite a violation in an examination or bring an enforcement action against a creditor that takes longer than required by the regulation to resolve a billing error notice, so long as the creditor has made good faith efforts to obtain the necessary information and make a determination as quickly as possible, and complies with all other requirements pending resolution of the error.

3.1.13 CFPB, CSBS Issue Consumer Guide on Mortgage Relief Options

On May 15, 2020, the Bureau and the Conference of State Bank Supervisory (CSBS) issued a guide to assist homeowners with federally backed loans through the process of obtaining mortgage relief. The guide details borrowers' rights to mortgage payment forbearance and foreclosure protection under the CARES Act.[85]

3.1.14 Complaint Bulletin

On May 21, 2020, the Bureau issued a consumer complaint Bulletin.[86] The bulletin shows that mortgage and credit card complaints top the list of complaints the Bureau has received that mention coronavirus or related terms. In April and May, the Bureau received historically higher complaints, however, complaints mentioning COVID-related terms amounted to a total of 4,500 complaints during those two months.

Mortgage and credit card complaints top the list for complaints that mention coronavirus terms, with 22 percent and 19 percent of complaints, respectively. Among mortgage complaints that mention coronavirus keywords, 59 percent of consumers identified struggling to pay the mortgage as the issue. For credit card complaints, 19 percent of consumers identified a problem with purchase shown or statement as the issue.

The Bureau also received its highest complaint volumes in its history in March and April at 36,700 and 42,500, respectively. In 2019, the monthly average for complaints was 29,000. The bulletin attributes the higher numbers to factors such as market conditions and more public awareness of the complaint system.

3.1.15 Prioritized Assessments

The COVID–19 pandemic has significantly impacted the financial marketplace and has resulted in a temporary shift in the Bureau's supervisory work. In late May, the Bureau rescheduled some of its planned examination work and instead began conducting Prioritized Assessments (PAs). PAs are higher-level inquiries than traditional examinations, designed to obtain real-time information from entities that operate in markets posing elevated risk of consumer harm due to pandemic-related issues. In July of 2020, the Bureau released Prioritized Assessments FAQs.[87]

3.1.16 Statement on Supervisory and Enforcement Practices Regarding Electronic Credit Card Disclosures in Light of COVID–19 Pandemic

On June 3, 2020, the Bureau issued a statement[88] indicating that it will take a flexible supervisory and enforcement approach during the pandemic regarding card issuers' electronic provision of disclosures required to be in writing for account-opening disclosures and temporary rate or fee reduction disclosures mandated under the provisions governing non-home secured, open-end credit in Regulation Z. Specifically, this statement pertains to oral telephone interactions where a card issuer may seek to open a new credit card account for a consumer, to provide certain temporary reductions in APRs or fees applicable to an existing account, or to offer a low-rate balance transfer. In these instances, the Bureau does not intend to cite a violation in an examination or bring an enforcement action against an issuer that during a phone call does not obtain a consumer's E-Sign consent to electronic provision of the written disclosures required by Regulation Z, so long as the issuer during the phone call obtains both the consumer's oral consent to electronic delivery of the written disclosures and oral affirmation of his or her ability to access and review the electronic written disclosures.

3.1.17 CFPB and State Regulators Provide Additional Guidance To Assist Borrowers Impacted by the COVID–19 Pandemic

On June 4, 2020, the Bureau and CSBS issued joint guidance to mortgage servicers to assist in complying with the CARES Act.[89] Servicers of federally-backed mortgages, such as Fannie Mae or Freddie Mac, Department of Housing

[83] The statement can be found at: *https://files.consumerfinance.gov/f/documents/cfpb_policy-statement_remittances-covid-19_2020-04.pdf.*

[84] The statement can be found at: *https://files.consumerfinance.gov/f/documents/cfpb_statement_regulation-z-error-resolution-covid-19_2020-05.pdf.*

[85] The guide can be found at: *https://files.consumerfinance.gov/f/documents/cfpb_csbs_consumers-forbearance-guide_2020-05.pdf.*

[86] The complaint bulletin can be found at: *https://files.consumerfinance.gov/f/documents/cfpb_complaint-bulletin_coronavirus-complaints.pdf.*

[87] The FAQs can be found at: *https://files.consumerfinance.gov/f/documents/cfpb_prioritized-assessment_frequently-asked-questions.pdf.*

[88] The statement can be found at: *https://files.consumerfinance.gov/f/documents/cfpb_e-sign-credit-card_statement_2020-06.pdf.*

[89] The guidance can be found at: *https://files.consumerfinance.gov/f/documents/cfpb_csbs_industry-forbearance-guide_2020-06.pdf.*

and Urban Development, Department of Veterans Affairs, or Department of Agriculture loans, must grant forbearance to borrowers with pandemic-related hardships that may last as long as two consecutive 180-day periods. Furthermore, additional interest, fees, or penalties beyond the amounts scheduled or calculated should be waived with no negative impact to the borrower's mortgage contract during the forbearance.

Mortgage servicers could violate the CARES Act or other applicable law and potentially cause consumer harm if they were to require documentation from borrowers to prove financial hardship, if they did not grant the forbearance once properly requested, or if they steered borrowers away from forbearance or misled them.

3.1.18 CFPB Issues Interim Final Rule on Loss Mitigation Options for Homeowners Recovering From Pandemic-Related Financial Hardships

On June 23, 2020, the Bureau issued an interim final rule (IFR) [90] that will make it easier for consumers to transition out of financial hardship caused by the COVID–19 pandemic and easier for mortgage servicers to assist those consumers.

The CARES Act provides forbearance relief for consumers with federally-backed mortgage loans. The mortgage industry has developed different options for borrowers to repay the payments that were forborne under the CARES Act. For example, the Federal Housing Finance Agency, Fannie Mae and Freddie Mac may permit some borrowers to defer repayment of the forborne amounts until the end of the mortgage loan. The Federal Housing Administration (FHA) has a similar program. These programs require the servicer to collect only minimal information from the borrower before offering the option.

The IFR makes it clear that servicers do not violate Regulation X by offering certain COVID–19-related loss mitigation options based on an evaluation of limited application information collected from the borrower. Normally, with certain exceptions, Regulation X would require servicers to collect a complete loss mitigation application before making an offer. The IFR specifies that the loss mitigation option must meet certain criteria to qualify for an exception from the typical requirement to collect a complete application. Among other things, the option must allow the borrower to delay paying all principal and interest payments that were forborne or became delinquent as a result of a financial hardship due, directly or indirectly, to the COVID–19 emergency. Servicers may not charge any fees to borrowers in connection with the option, and the borrower's acceptance ends any preexisting delinquency. The exception is not limited to payments forborne under the CARES Act.

The IFR also provides servicers relief from certain requirements under Regulation X that normally would apply after a borrower submits an incomplete loss mitigation application. Once the borrower accepts an offer for an eligible program under the IFR, the servicer need not exercise reasonable diligence to obtain a complete application and need not provide the acknowledgment notice that is generally required under Regulation X when a borrower submits a loss mitigation application.

Servicers still must comply with Regulation X's other requirements after a borrower accepts a loss mitigation offer. For example, if the borrower becomes delinquent again after accepting the offer, the servicer would have to satisfy Regulation X's early intervention requirements. Similarly, if the servicer receives a new loss mitigation application from the borrower, the servicer would have to comply with Regulation X's loss mitigation procedures.

3.2 Non-COVID Related Guidance

3.2.1 Statement of Policy Regarding Prohibition on Abusive Acts or Practices

On January 24, 2020, the Bureau issued a policy statement [91] providing a framework on how it intends to apply the ''abusiveness'' standard in supervision and enforcement matters. Through this policy statement, the Bureau provided clarification on how it intends to apply abusiveness in order to promote compliance and certainty. In its supervision and enforcement work, the Bureau intends to:

- Focus on citing or challenging conduct as abusive in supervision and enforcement matters only when the harm to consumers outweighs the benefit.
- Generally, avoid ''dual pleading'' of abusiveness and unfairness or deception violations arising from all or nearly all the same facts, and allege ''stand alone'' abusiveness violations that demonstrate clearly the nexus between cited facts and the Bureau's legal analysis.
- Seek monetary relief for abusiveness only when there has been a lack of a good-faith effort to comply with the law, except the Bureau will continue to seek legal or equitable remedies, such as damages and restitution for injured consumers regardless of whether a company acted in good faith or bad faith.

3.2.2 Responsible Business Conduct: Self-Assessing, Self-Reporting, Remediating, and Cooperation (CFPB Bulletin 2020–01)

In 2013, the Bureau issued a Bulletin that identified several activities that businesses may engage in that could prevent and minimize harm to consumers, referring to these activities as ''responsible conduct.'' On March 6, 2020, the Bureau issued an updated Bulletin [92] to clarify its approach to responsible conduct and to reiterate the importance of such conduct. The Bulletin noted that the Bureau principally considers four categories of conduct when evaluating whether some form of credit is warranted in an enforcement investigation or supervisory matter: Self-assessing, self-reporting, remediating, and cooperating. However, if an entity engages in another type of activity particular to its situation that is both substantial and meaningful, the Bureau may take that activity into consideration as well.

3.2.3 Innovation Updates

On May 22, 2020, the Bureau announced that it issued two No-Action Letter (NAL) Templates under its innovation policies. To encourage innovation, last year the Bureau introduced an improved NAL Policy that includes, among other things, a more streamlined review process focusing on the consumer benefits and risks of the applicant's product or service. NALs provide increased regulatory certainty through a statement that the Bureau will not bring a supervisory or enforcement action against a company for providing a product or service under certain facts and circumstances. The improved Policy also includes an innovative provision concerning NAL templates, which permits entities such as service providers and trade associations to secure a template that can serve as the foundation for NAL applications from companies that provide consumer financial products and services.

[90] The IFR can be found at: *https://files.consumerfinance.gov/f/documents/cfpb_interim-final-rule_respa_covid-19-related-loss-mitigation-options.pdf.*

[91] The statement can be found at: *https://files.consumerfinance.gov/f/documents/cfpb_abusiveness-enforcement-policy_statement.pdf.*

[92] The Bulletin can be found at: *https://files.consumerfinance.gov/f/documents/cfpb_bulletin-2020-01_responsible-business-conduct.pdf.*

Specifically, NAL templates include (among other things) a non-binding statement of the Bureau's intent to grant NAL applications based on it.

Using the first NAL Template, requested by Brace Software, Inc. (Brace), mortgage servicers seeking to assist struggling borrowers would be able to apply for NALs in connection with the use of Brace's online platform to implement loss-mitigation efforts for those borrowers.[93] As described in Brace's application, the platform is an online version of the Fannie Mae Form 710, which is the loss mitigation application used by most mortgage servicers. While the Bureau does not endorse particular products or providers, the Bureau observes that digitizing the loss mitigation application process has the potential to improve a process that is experiencing an increase in loss mitigation requests from consumers due to the COVID–19 pandemic.

The Bureau also approved a NAL template that insured depository institutions intending to offer the standardized, small-dollar credit product described therein can use to support applications for the issuance of individual NALs.[94] The NAL template contemplates that NALs based on it will include certain important protections for consumers who seek the covered small-dollar loan products.

3.2.4 Bureau Launches Pilot Advisory Opinion Program To Provide Regulated Entities Clear Guidance and Improve Compliance

On June 18, 2020, the Bureau launched a pilot advisory opinion (AO) program[95] to publicly address regulatory uncertainty in the Bureau's existing regulations. The pilot AO program will allow entities seeking to comply with regulatory requirements to submit a request where uncertainty exists. The Bureau will then select topics based on the program's priorities and make the responses available to the public.

The pilot program will focus on four key priorities:

- Consumers are provided with timely and understandable information to make responsible decisions.
- Identify outdated, unnecessary or unduly burdensome regulations in order to reduce regulatory burdens.
- Consistency in enforcement of Federal consumer financial law in order to promote fair competition.
- Ensuring markets for consumer financial products and services operate transparently and efficiently to facilitate access and innovation.

Additionally, initial factors weighing for the appropriateness of an AO include: That the interpretive issue has been noted during prior Bureau examinations as one that might benefit from additional regulatory clarity; that the issue is one of substantive importance or impact or one whose clarification would provide significant benefit; and/or that the issue concerns an ambiguity that the Bureau has not previously addressed through an interpretive rule or other authoritative source. There will be a strong presumption against appropriateness of an AO for issues that are the subject of an ongoing investigation or enforcement action or the subject of an ongoing or planned rulemaking.

If deemed appropriate, the Bureau will issue an advisory opinion based on its summary of the facts presented that would be applicable to other entities in situations with similar facts and circumstances. The advisory opinions would be posted on the Bureau's website and published in the **Federal Register**.

In addition to the pilot, the Bureau also announced that the public can comment on the proposed AO program. Following the conclusion of the pilot, the proposed AO program will be fully implemented after the Bureau's review of comments received.

3.2.5 CFPB Issues Interpretative Rule on Method for Determining Underserved Areas

On June 23, 2020, the Bureau issued an interpretive rule[96] with respect to how the Bureau determines which counties qualify as ''underserved'' for a given calendar year under Regulation Z.

The Bureau's annual list of rural and underserved counties and areas is used in applying various provisions under Regulation Z, which implements the Truth in Lending Act (TILA). These provisions include the exemption from the requirement to establish an escrow account for a higher-priced mortgage loan and the ability to originate balloon-payment qualified mortgages and balloon-payment high cost mortgages.

Regulation Z states that an area is ''underserved'' during a calendar year if, according to HMDA data for the preceding calendar year, it is a county in which no more than two creditors extended covered transactions secured by first liens on properties in the county five or more times. The Bureau previously interpreted how HMDA data would be used to determine which areas meet this standard using a method set forth in the commentary to Regulation Z. However, portions of this method have become obsolete because they rely on data elements that were modified or eliminated by certain 2015 amendments to the Bureau's HMDA regulations, which became effective in 2018.

The interpretive rule describes the HMDA data that will instead be used in determining that an area is ''underserved'' for purposes of the standard described in Regulation Z. This interpretation supersedes the outdated methodology set forth in the commentary to Regulation Z.

4. Remedial Actions

4.1 Public Enforcement Actions

The Bureau's supervisory activities resulted in or supported the following public enforcement actions.

4.1.1 Citizens Bank, N.A.

On January 30, 2020, the Bureau filed suit against Citizens Bank, N.A. (Citizens), a national banking association headquartered in Providence, Rhode Island. The Bureau's complaint[97] alleges violations of TILA and TILA's implementing Regulation Z, including violations of amendments to TILA contained in the Fair Credit Billing Act (FCBA) and the Credit Card Accountability Responsibility and Disclosure Act (CARD Act).

As described in the complaint, the Bureau alleges that for several years Citizens violated TILA, as amended by the FCBA, and Regulation Z by failing to properly manage and respond to credit card disputes. The complaint alleges that Citizens automatically denied consumers' billing error notices and claims of unauthorized use in certain circumstances. The complaint further alleges that Citizens failed to

[93] Brace's application can be found at: *https://files.consumerfinance.gov/f/documents/cfpb_brace_no-action-letter-request.pdf*. The Brace NAL Template can be found at: *https://files.consumerfinance.gov/f/documents/cfpb_brace_no-action-letter.pdf*.

[94] The Bank Policy Institute (the BPI) application can be found at: *https://files.consumerfinance.gov/f/documents/cfpb_bpi_no-action-letter-request.pdf*. The BPI NAL Template can be found at: *https://files.consumerfinance.gov/f/documents/cfpb_bpi_no-action-letter.pdf*.

[95] More information about the AO program can be found at: *https://files.consumerfinance.gov/f/documents/cfpb_advisory-opinions-pilot_fr-notice.pdf, https://files.consumerfinance.gov/f/documents/cfpb_advisory-opinions-proposal_fr-notice.pdf*.

[96] The interpretative rule can be found at: *https://files.consumerfinance.gov/f/documents/cfpb_interpretive-rule_determining-underserved-areas-using-hmda-data.pdf*.

[97] The complaint can be found at: *https://files.consumerfinance.gov/f/documents/cfpb_citizens-bank_complaint_2020-01.pdf*.

fully refund finance charges and fees when consumers asserted meritorious disputes or fraud claims and failed to send consumers required acknowledgement letters and denial notices in response to billing error notices.

The Bureau further alleges that for several years Citizens violated TILA by violating provisions passed under the CARD Act. The Bureau alleges that Citizens violated TILA and Regulation Z by failing to provide credit counseling referrals to consumers who called Citizens' toll-free number designated for that purpose. These alleged violations of TILA—including those under the FCBA and the CARD Act—and Regulation Z also constitute violations of the Consumer Financial Protection Act.

The Bureau's complaint seeks, among other remedies, an injunction against defendants and the imposition of civil money penalties.

5. Signing Authority

The Director of the Bureau, having reviewed and approved this document, is delegating the authority to electronically sign this document to Laura Galban, a Bureau Federal Register Liaison, for purposes of publication in the **Federal Register**.

Dated: September 4, 2020.

Laura Galban,

Federal Register Liaison, Bureau of Consumer Financial Protection.

[FR Doc. 2020–19978 Filed 9–9–20; 8:45 am]

BILLING CODE 4810–AM–P

DEPARTMENT OF DEFENSE

Defense Acquisition Regulations System

[Docket Number DARS–2020–0022; OMB Control Number 0704–0386]

Information Collection Requirement; Defense Federal Acquisition Regulation Supplement; Small Business Programs

AGENCY: Defense Acquisition Regulations System; Department of Defense (DoD).

ACTION: Notice and request for comments regarding a proposed extension of an approved information collection requirement.

SUMMARY: In compliance with section 3506(c)(2)(A) of the Paperwork Reduction Act of 1995, DoD announces the proposed extension of a public information collection requirement and seeks public comment on the provisions thereof. DoD invites comments on: Whether the proposed collection of information is necessary for the proper performance of the functions of DoD, including whether the information will have practical utility; the accuracy of the estimate of the burden of the information collection on respondents, including the use of automated collection techniques or other forms of information technology. The Office of Management and Budget (OMB) has approved this information collection requirement under Control Number 0704–0386 through November 30, 2020. DoD proposes that OMB extend its approval for an additional three years.

DATES: DoD will consider all comments received by November 9, 2020.

ADDRESSES: You may submit comments, identified by OMB Control Number 0704–0386, using any of the following methods:

○ *Federal eRulemaking Portal: http://www.regulations.gov.* Follow the instructions for submitting comments.

○ *Email: osd.dfars@mail.mil.* Include OMB Control Number 0704–0386 in the subject line of the message.

○ *Fax:* 571–372–6094.

○ *Mail:* Defense Acquisition Regulations System, Attn: Ms. Jennifer Johnson, OUSD(A&S)DPC/DARS, 3060 Defense Pentagon, Room 3B938, Washington, DC 20301–3060.

Comments received generally will be posted without change to *http://www.regulations.gov,* including any personal information provided.

FOR FURTHER INFORMATION CONTACT: Ms. Jennifer Johnson, at 571–372–6100.

SUPPLEMENTARY INFORMATION:

Title and OMB Number: Defense Federal Acquisition Regulation Supplement (DFARS), Small Business Programs; OMB Control Number 0704–0386.

Type of Request: Extension.

Affected Public: Businesses or other for-profit and not-for-profit institutions.

Respondent's Obligation: Required to obtain or retain benefits.

Respondents: 41.

Responses per Respondent: 1.

Annual Responses: 41.

Hours per Response: 1.

Estimated Hours: 41.

Reporting Frequency: On occasion.

Needs and Uses: DoD uses this information to improve administration under the small business subcontracting program and to evaluate a contractor's past performance in complying with its subcontracting plan.

The clause at DFARS 252.219–7003, Small Business Subcontracting Plan (DoD Contracts), is prescribed for use in solicitations and contracts that include the clause at FAR 52.219–9, Small Business Subcontracting Plan. Paragraph (e) of the clause requires the contractor to notify the contracting officer, in writing, of any substitutions of firms that are not small business firms, for the small business firms specifically identified in the subcontracting plan. The notification is necessary when (1) a prime contractor has identified specific small business concerns in its subcontracting plan, and (2) after contract award, substitutes one of the small businesses identified in its subcontracting plan with a firm that is not a small business. The intent of this information collection is to alert the contracting officer of this situation.

Jennifer Lee Hawes,

Regulatory Control Officer, Defense Acquisition Regulations System.

[FR Doc. 2020–19981 Filed 9–9–20; 8:45 am]

BILLING CODE 5001–06–P

DEPARTMENT OF DEFENSE

Defense Acquisition Regulations System

[Docket Number DARS–2020–0023; OMB Control Number 0704–0446]

Information Collection Requirement; Defense Federal Acquisition Regulation Supplement (DFARS); Evaluation Factor for Use of Members of the Armed Forces Selected Reserve

AGENCY: Defense Acquisition Regulations System, Department of Defense (DoD).

ACTION: Notice and request for comments regarding a proposed extension of an approved information collection requirement.

SUMMARY: In compliance with section 3506(c)(2)(A) of the Paperwork Reduction Act of 1995, DoD announces the proposed revision of a public information collection requirement and seeks public comment on the provisions thereof. *DoD invites comments on:* Whether the proposed collection of information is necessary for the proper performance of the functions of DoD, including whether the information will have practical utility; the accuracy of the estimate of the burden of the proposed information collection; ways to enhance the quality, utility, and clarity of the information to be collected; and ways to minimize the burden of the information collection on respondents, including the use of automated collection techniques or other forms of information technology. The Office of Management and Budget (OMB) has approved this information collection for use through November 30,

2020. DoD proposes that OMB extend its approval for use for three additional years beyond the current expiration date.

DATES: DoD will consider all comments received by November 9, 2020.

ADDRESSES: You may submit comments, identified by OMB Control Number 0704–0446, using any of the following methods:

Federal eRulemaking Portal: http://www.regulations.gov. Follow the instructions for submitting comments.

Email: osd.dfars@mail.mil. Include OMB Control Number 0704–0446 in the subject line of the message.

Mail: Defense Acquisition Regulations System, Attn: Ms. Carrie Moore, OUSD(A&S)DPC/DARS, 3060 Defense Pentagon, Room 3B938, Washington, DC 20301–3060.

Comments received generally will be posted without change to *http://www.regulations.gov,* including any personal information provided.

FOR FURTHER INFORMATION CONTACT: Ms. Carrie Moore, at 571–372–6093.

SUPPLEMENTARY INFORMATION: *Title and OMB Number:* Defense Federal Acquisition Regulation Supplement (DFARS): Evaluation Factor for Use of Members of the Armed Forces Selected Reserve; OMB Control Number 0704–0446.

Affected Public: Businesses or other for-profit and not-for profit institutions.

Respondent's Obligation: Required to obtain or retain benefits.

Type of Request: Revision.

Number of Respondents: 13.

Responses per Respondent: 1.

Annual Responses: 13.

Average Burden per Response: Approximately 20 hours.

Annual Burden Hours: 620.

Reporting Frequency: On occasion.

Needs and Uses: DFARS 215.370–3 prescribes the use of the provision at DFARS 252.215–7005, Evaluation Factor for Employing or Subcontracting with Members of the Selected Reserve, in solicitations that include an evaluation factor to provide a preference for offerors that intend to perform the contract using employees or individual subcontractors who are members of the Selected Reserve. The documentation provided by an offeror with their proposal will be used by contracting officers to validate that Selected Reserve members will be utilized in the performance of the contract. This information collection implements a requirement of section 819 of the National Defense Authorization Act for Fiscal Year 2006 (Pub. L. 109–163).

For solicitations that include the provision at DFARS 252.215–7005, the provision requires offerors to include documentation with their proposal that supports their intent to use employees or individual subcontractors who are members of the Selected Reserve in order to receive a preference under the associated evaluation factor. Such documentation may include, but is not limited to, existing company documentation indicating the names of the Selected Reserve members who are currently employed by the company, or a statement that positions will be set aside to be filled by Selected Reserve members, along with verifying documentation.

Jennifer Lee Hawes,

Regulatory Control Officer, Defense Acquisition Regulations System.

[FR Doc. 2020–19980 Filed 9–9–20; 8:45 am]

BILLING CODE 5001–06–P

DEPARTMENT OF THE DEFENSE

Department of the Army, Corps of Engineers

Notice of Intent To Prepare an Environmental Impact Statement for the Nassau County Back Bays Coastal Storm Risk Management Feasibility Study

AGENCY: U.S. Army Corps of Engineers, DoD.

ACTION: Notice of intent.

SUMMARY: Pursuant to the requirements of the National Environmental Policy Act, the U.S. Army Corps of Engineers (Corps) plans to prepare an integrated Environmental Impact Statement (EIS) for the proposed Nassau County Back Bays (NCBB) Coastal Storm Risk Management (CSRM) Feasibility Study. The EIS will evaluate environmental impacts from reasonable project alternatives designed to reduce future flood risk in ways that support the long-term resilience and sustainability of the coastal ecosystem and surrounding communities due to sea level rise, local subsidence and storms; and to reduce the economic costs and risks associated with large scale flood and storm events in the area known as the Atlantic Coast of New York, the Nassau County Back Bays.

ADDRESSES: Send written comments and suggestions concerning the scope of issues to be evaluated within the EIS to Scott Sanderson, Project Manager, U.S. Army Corps of Engineers, Philadelphia District, Planning Division—Coastal Section, (CENAP–PL–PC), 100 Penn Square East, Wanamaker Building, Philadelphia, PA 19107–3390, *scott.a.sanderson@usace.army.mil* or via email to Angela Sowers, NEPA coordinator, *angela.sowers@usace.army.mil.*

FOR FURTHER INFORMATION CONTACT: Questions about the overall NCBB CSRM Feasibility Study should be directed to Scott Sanderson at *scott.a.sanderson@usace.army.mil* or (215) 656–6571.

SUPPLEMENTARY INFORMATION:

1. Background

As a result of Hurricane Sandy in October 2012, Congress passed Public Law 113–2, which authorized supplemental appropriations to Federal agencies for expenses related to the consequences of Hurricane Sandy. The Corps is investigating measures to reduce future flood risk in ways that support the long-term resilience and sustainability of the coastal ecosystem and surrounding communities, and reduce the economic costs and risks associated with flood and storm events. In support of this goal, the Corps completed the North Atlantic Coast Comprehensive Study (NAACS), which identified nine high risk areas on the Atlantic Coast for further analysis based on preliminary findings. The NCBB area was identified as one of the nine areas of high risk, or Focus Areas, that warrants an in-depth investigation into potential CSRM measures. During Hurricane Sandy, the study area communities were severely affected with large areas subjected to erosion, storm surge, and wave damage along the Atlantic Ocean shoreline, and flooding of communities within and surrounding bays. Along the Atlantic Ocean, surge and waves inundated low lying areas, and contributed to the flooding along the shoreline of the interior of the bays. Hurricane Sandy illustrated the need to re-evaluate the entire back-bay area as a system, when considering risk management measures.

The original Notice of Intent (NOI) to prepare an EIS was published in the **Federal Register** on Friday, April 21, 2017 (82 FR 18746), but was withdrawn by publication in the **Federal Register** on June 8, 2020 (85 FR 35801). The original NOI was withdrawn in order to align the rescoped study schedule with Executive Order (E.O.) 13807, ''One Federal Decision Framework for the Environmental Review and Authorization Process for Major Infrastructure Projects under E.O. 13807.''

The purpose of the study is to determine the feasibility of a project to reduce the risk of coastal storm damage in the back bays of Nassau County, New York, while contributing to the

resilience of communities, critical infrastructure, and the natural environment. The study is needed because the study area experiences frequent flooding from high tides, spring tides, sunny day flooding, and coastal storms; is considered at high risk to coastal storm flooding with an associated threat to life safety; includes a degraded back bay ecosystem; and is susceptible to relative sea level change.

On 5 February 2020, the NCBB CSRM Feasibility Study was granted an exemption from the requirement to complete the feasibility study within 3 years; required in Section 1001(a) of the Water Resources Reform and Development Act of 2014. The exemption was contingent on re-scoping the study to focus on critical infrastructure and highly vulnerable areas outside of Coastal Barrier Resources Act units. As a result, storm surge barriers are no longer under consideration at any of the inlets to the back bays from the Atlantic Ocean. The original NOI was withdrawn on June 8, 2020 (85 FR 35801) due to the need to re-scope and align updated schedules consistent with E.O. 13807. The NEPA coordination/review schedule for the re-scoped study is being aligned and coordinated with the appropriate Federal and state resource agencies, as required by E.O. 13807. This includes cooperating agencies that have statutory jurisdiction over the review process for any action being contemplated in the course of the feasibility study and development of the EIS.

Acknowledging the complex analyses required to comprehensively reevaluate the study area considering the influence of the Atlantic Ocean shorefront conditions on the back-bay system and the potential for large-scale marine construction to implement flood protection measures, an EIS will be prepared. The EIS will build upon the extensive Atlantic shoreline alternatives analysis and environmental and technical studies and outreach conducted to date. The scope of analysis will be appropriate to the level of detail necessary for an EIS and will receive input from the public and reviewing agencies. The analysis will provide the basis for the alternatives to problems associated with storm surge and wave damage along the back-bays. Public, agency and stakeholder comments and feedback will continue to be accepted at any time during the feasibility study and preparation of the EIS.

2. Study Area

The study area includes all of the tidally influenced bays and estuaries within Nassau County, New York, located on Long Island, NY, that are hydraulically connected to the south shore of Nassau County, directly east of Queens County and west of Suffolk County for approximately 98 square miles.

3. Corps Decision Making

As required by Council on Environmental Quality's Principles, Requirements and Guidelines for Water and Land Related Resources Implementation Studies (2013), alternatives to the proposed Federal action that meet the purpose and need will be considered in the EIS. These alternatives will include no action and a range of reasonable alternatives for managing flood risk within the Nassau County Back Bays Area. The measures to be evaluated will consider applicable public stakeholders and agency coordination received since the study commenced in 2017, and through future outreach efforts. Coordination early in the process identified concerns and potential impacts, relevant effects of past actions, and possible alternative actions that were pivotal in defining the re-scoped study. The decision making approach will allow time to address agency policy issues and build consensus among cooperating agencies and the public.

4. Scoping/Public Participation

Prior scoping meetings were held in May 2017 and June 2019. At this time, additional scoping meetings are not scheduled. However, input can be provided to the contacts identified here within, at any time during the feasibility study and preparation of the EIS. Public meetings will be conducted during the public review period of the draft EIS.

5. Lead and Cooperating Agencies

The Corps is the lead federal agency and the New York Department of Environmental Conservation (in partnership with Nassau County, NY) is the nonfederal sponsor for the study and the preparation of the EIS in meeting the requirements of the NEPA and its Implementing Regulations of the President's Council on Environmental Quality (40 CFR 1500–1508). The U.S. Fish and Wildlife Service (FWS), the National Oceanic and Atmospheric Administration (NOAA), the Federal Emergency Management Agency (FEMA), and the U.S. Environmental Protection Agency (EPA) have been identified as cooperating agencies. The preparation of the EIS will be coordinated with New York State and Nassau County offices with discretionary authority relative to the proposed actions. The Draft Integrated Feasibility Report/EIS is currently scheduled for distribution to the public in 2021.

Dated: September 4, 2020.

Karen J. Baker,

Programs Director, North Atlantic Division.

[FR Doc. 2020–20031 Filed 9–9–20; 8:45 am]

BILLING CODE 3720–58–P

DEPARTMENT OF DEFENSE

Department of the Army, Corps of Engineers

Withdrawal of the Notice of Intent To Prepare an Environmental Impact Statement for the Upper Susquehanna River Basin, New York, Comprehensive Flood Damage Reduction Feasibility Study

AGENCY: Department of the Army, U.S. Army Corps of Engineers, DoD.

ACTION: Notice of intent; withdrawal.

SUMMARY: The U.S. Army Corps of Engineers (USACE), Baltimore District, is notifying interested parties that it has withdrawn the notice of intent (NOI) to develop an EIS for the proposed Upper Susquehanna River Basin, New York, Comprehensive Flood Damage Reduction Feasibility Study.

DATES: The notice of intent to prepare an EIS published in the **Federal Register** on April 4, 2016 (81 FR 76936), is withdrawn as of September 10, 2020.

ADDRESSES: U.S. Army Corps of Engineers, Baltimore District, Planning Division, Civil Project Development Branch (CENAB–PL–CPD), 2 Hopkins Plaza, Baltimore, MD, 21201.

FOR FURTHER INFORMATION CONTACT: Questions regarding the withdrawal of this NOI should be addressed to Mr. Charles Leasure, telephone 410–962–5175; email address: *charles.w.leasure@usace.army.mil.*

SUPPLEMENTARY INFORMATION: The study was authorized by a Resolution of the House Committee on Transportation and Infrastructure, on 24 September 2008. The USACE undertook the study in partnership with the New York State Department of Environmental Conservation (NYSDEC). The study investigated structural and non-structural flood-risk management (FRM) strategies and projects to reduce flood risk. The study resulted in no viable flood risk management economically justified alternatives that could be implemented through federal policies. Based on these findings, USACE has concluded that construction of a federal FRM project by USACE is not recommended under this study

authority. Several recommendations were included in a report to the sponsor for potential further consideration through other USACE programs.

Dated: September 4, 2020.

Karen J. Baker,

Programs Director, North Atlantic Division.

[FR Doc. 2020–19994 Filed 9–9–20; 8:45 am]

BILLING CODE 3720–58–P

DEPARTMENT OF DEFENSE

Department of the Army, Corps of Engineers

Notice of Intent To Prepare an Environmental Impact Statement for an Easement to Cross Under Lake Oahe, North Dakota for a Fuel-Carrying Pipeline Right-Of-Way for a Portion of the Dakota Access Pipeline

AGENCY: Department of the Army, U.S. Army Corps of Engineers, DoD.

ACTION: Notice of intent.

SUMMARY: This notice advises the public that the U.S. Army Corps of Engineers (Corps), as lead agency, will prepare an environmental impact statement (EIS) pursuant to court order to evaluate granting an easement to Dakota Access, LLC to cross federal land administered by Corps for the Oahe Dam and Reservoir Project on the Missouri River. This notice opens the public scoping phase and invites interested parties to identify issues and reasonable alternatives to the proposed action that should be considered in the EIS.

DATES: To ensure consideration during the EIS process, written comments on the scope of the EIS must be received no later than October 26, 2020. Due to the ongoing coronavirus (COVID–19) pandemic, virtual scoping meetings will be held in lieu of in-person scoping meetings. Virtual scoping meetings will be held on October 15 and 16, 2020. Additional information is included under ''Public Scoping.''

ADDRESSES: Scoping comments can be submitted by mail or email. Please do not submit comments on USB, hard drive, or other portable storage devices.

Scoping comments can be mailed to: U.S. Army Corps of Engineers, Omaha District, ATTN: CENWO–PM–A–C (DAPL NOI), 1616 Capitol Avenue, Omaha, NE 68102.

Scoping comments can also be emailed to: *NWO-DAPL-EIS@usace.army.mil.*

If emailing comments, please use ''Scoping Comments, Dakota Access Pipeline Crossing'' as the subject of your email.

FOR FURTHER INFORMATION CONTACT: Heath Kruger, U.S. Army Corps of Engineers at (402)-995–2036 or by email at: *NWO-DAPL-EIS@usace.army.mil.*

SUPPLEMENTARY INFORMATION: On July 25, 2016, the Corps granted permission to applicant Dakota Access, LLC, under Section 14 of the Rivers and Harbors Act of 1899, 33 U.S.C. 408 (408 permission), for a proposed pipeline crossing under Lake Oahe approximately 0.5 miles upstream of the northern boundary of the Standing Rock Reservation. The approximately 1,172-mile pipeline connects the Bakken and Three Forks oil production areas in North Dakota to an existing crude oil market near Patoka, Illinois.

The 408 permission was supported by a Finding of No Significant Impact (FONSI) based on an Environmental Assessment (EA), as contemplated under the National Environmental Policy Act (NEPA). This EA/FONSI was completed on July 25, 2016, the date that the Corps granted the 408 permission. On February 8, 2017, the Corps granted an easement, with conditions, to cross federal property administered by the Corps at Lake Oahe, North Dakota. The Corps granted the easement under the Mineral Leasing Act (MLA), 30 U.S.C. 185. The easement allowed for the installation, construction, operation, maintenance, repair, replacement and termination of a thirty-inch diameter horizontal directional drill buried oil pipeline for the purpose of transporting crude oil, and related facilities, at or under Lake Oahe Project in North Dakota, with a 50-foot wide width plus the ground occupied by the pipeline and related facilities. Operation of the pipeline began on June 1, 2017.

On March 25, 2020, the District Court for the District of Columbia ordered the Corps to prepare an EIS for this portion of the pipeline because the pipeline's ''effects on the quality of the human environment are likely to be highly controversial.'' *Standing Rock Sioux Tribe* v. *U.S. Army Corps of Eng'rs,* No. 1: 16-cv-01534, Memorandum Opinion (D.D.C. March 25, 2020), ECF No. 496.

The proposed crossing of Corps-administered federal property requires the grant of a right-of-way (easement) under the MLA. Comments are invited to assist in identifying the scope of potentially affected environmental, social, and economic issues relevant to the potential grant of an easement and determining if there are reasonable alternatives to be considered in the EIS.

Consistent with the Court's decision, Dakota Access, LLC seeks an easement from the Corps for the original proposed project whose construction was completed on June 1, 2017. A decision on whether to authorize the pipeline to cross Lake Oahe at the proposed location would be based on: (1) The July 25, 2016, EA/FONSI; (2) the Corps' August 31, 2018, analysis on remand from a decision by the District Court; and (3) additional analysis developed through this EIS.

Scoping Process: As the lead federal agency, the Corps will also coordinate with the public, other state and local agencies, and Tribes in order to evaluate the range of actions, alternatives, and impacts of the proposed project. Consistent with the Council on Environmental Quality (CEQ's) NEPA implementing regulations, we anticipate that an EIS will analyze the following possible alternatives:

(1) No action alternative, where the Corps would not grant an easement and would require restoration of the Corps-administered federal lands to pre-pipeline construction conditions;

(2) The Corps would not grant an easement and would take no further action;

(3) The Corps would grant the requested easement with the same conditions as the vacated easement; and

(4) The Corps would grant the requested easement with additional conditions beyond those in the vacated easement.

As part of this notice, the Corps requests input on any additional potential alternatives.

Public Scoping: This notice also serves to inform the public that virtual public scoping meeting will be held during the 45-day scoping period. Virtual scoping meetings will be held on October 15 and 16, 2020 from 6:00 p.m. to 9:00 p.m. central time on each day. The meeting information can be accessed at *https://go.usa.gov/xG2Pt.* The Corps will use the comments received to assist in identifying the significant issues which should be addressed in the EIS.

Public Comment Availability: Before including your address, telephone number, email address, or other personal identifying information in your comment, you should be aware that your entire comment—including your personal identifying information—may be made publicly available at any time. While you can ask in your comment that your personal identifying information be withheld from public review, the

Corps cannot guarantee that this will occur.

D. Peter Helmlinger,

Brigadier General, U.S. Army, Division Commander.

[FR Doc. 2020–19993 Filed 9–9–20; 8:45 am]

BILLING CODE 3720–58–P

DEPARTMENT OF EDUCATION

[Docket No.: ED–2020–SCC–0147]

Agency Information Collection Activities; Submission to the Office of Management and Budget for Review and Approval; Comment Request; National Assessment of Educational Progress (NAEP) 2021 Materials Update

AGENCY: Department of Education (ED).

ACTION: Notice.

SUMMARY: In accordance with the Paperwork Reduction Act of 1995, ED is proposing a revision to an existing information collection.

DATES: Interested persons are invited to submit comments on or before October 13, 2020.

ADDRESSES: Written comments and recommendations for proposed information collection requests should be sent within 30 days of publication of this notice to *www.reginfo.gov/public/do/PRAMain.* Find this particular information collection request by selecting ''Department of Education'' under ''Currently Under Review,'' then check ''Only Show ICR for Public Comment'' checkbox.

FOR FURTHER INFORMATION CONTACT: For specific questions related to collection activities, please contact Carrie Clarady, 202–245–6347.

SUPPLEMENTARY INFORMATION: The Department of Education (ED), in accordance with the Paperwork Reduction Act of 1995 (PRA) (44 U.S.C. 3506(c)(2)(A)), provides the general public and Federal agencies with an opportunity to comment on proposed, revised, and continuing collections of information. This helps the Department assess the impact of its information collection requirements and minimize the public's reporting burden. It also helps the public understand the Department's information collection requirements and provide the requested data in the desired format. ED is soliciting comments on the proposed information collection request (ICR) that is described below. The Department of Education is especially interested in public comment addressing the following issues: (1) Is this collection necessary to the proper functions of the Department; (2) will this information be processed and used in a timely manner; (3) is the estimate of burden accurate; (4) how might the Department enhance the quality, utility, and clarity of the information to be collected; and (5) how might the Department minimize the burden of this collection on the respondents, including through the use of information technology. Please note that written comments received in response to this notice will be considered public records.

Title of Collection: National Assessment of Educational Progress (NAEP) 2021 Materials Update.

OMB Control Number: 1850–0928.

Type of Review: A revision of an existing information collection.

Respondents/Affected Public: Individuals or Households.

Total Estimated Number of Annual Responses: 329,909.

Total Estimated Number of Annual Burden Hours: 180,233.

Abstract: The National Assessment of Educational Progress (NAEP), conducted by the National Center for Education Statistics (NCES), is a federally authorized survey of student achievement at grades 4, 8, and 12 in various subject areas, such as mathematics, reading, writing, science, U.S. history, civics, geography, economics, technology and engineering literacy (TEL), and the arts. The National Assessment of Educational Progress Authorization Act (Pub. L. 107–279 Title III, section 303) requires the assessment to collect data on specified student groups and characteristics, including information organized by race/ethnicity, gender, socio-economic status, disability, and limited English proficiency. It requires fair and accurate presentation of achievement data and permits the collection of background, noncognitive, or descriptive information that is related to academic achievement and aids in fair reporting of results. The intent of the law is to provide representative sample data on student achievement for the nation, the states, and subpopulations of students and to monitor progress over time. The request to conduct NAEP 2021, including operational assessments and pilot tests: Operational national/state/TUDA Digitally Based Assessments (DBA) in mathematics and reading at grades 4 and 8, and Puerto Rico in mathematics at grades 4 and 8; and operational national DBA in U.S. history and civics at grade 8 was approved in April 2020, with a further update to the materials approved in July 2020. This request is to conduct NAEP operational assessments in 2021 and will follow the traditional NAEP design which assesses each student in 60-minutes for one cognitive subject. Given the COVID–19 outbreak, NAEP requires personal protective equipment for field staff and must plan for additional sessions given that students may attend school on a staggered schedule. NAEP was not able to secure additional funding from Congress to cover the additional costs for personal protective equipment, necessary increases in field staff, and other operational costs that would be required to assess the full sample. As such, this Amendment reflects the elimination of the national-only assessments (grade 8 U.S. History and Civics, and age 17 Long-Term Trend), a smaller sample of students within each state for reading and mathematics, and the elimination of TUDAs from the 2021 sample. This Amendment also includes the addition of an online version of the student questionnaires that will be available to sampled students who are remote and not able to be assessed in-person, as well as the addition of some questionnaire items on teacher, student, and school experiences conditioned by the COVID–19 pandemic. The final Materials Update #3 is scheduled for October of 2020. The NAEP results will be reported to the public through the Nation's Report Card as well as other online NAEP tools.

Dated: September 4, 2020.

Stephanie Valentine,

PRA Coordinator, Strategic Collections and Clearance, Governance and Strategy Division, Office of Chief Data Officer, Office of Planning, Evaluation and Policy Development.

[FR Doc. 2020–19965 Filed 9–9–20; 8:45 am]

BILLING CODE 4000–01–P

DEPARTMENT OF EDUCATION

[Docket No.: ED–2020–SCC–0094]

Agency Information Collection Activities; Submission to the Office of Management and Budget for Review and Approval; Comment Request; Report of Dispute Resolution Under Part C of the Individuals With Disabilities Education Act

AGENCY: Office of Special Education and Rehabilitative Services (OSERS), ED.

ACTION: Notice.

SUMMARY: In accordance with the Paperwork Reduction Act of 1995, ED is proposing an extension of an existing information collection.

DATES: Interested persons are invited to submit comments on or before October 13, 2020.

ADDRESSES: Written comments and recommendations for proposed information collection requests should be sent within 30 days of publication of this notice to *www.reginfo.gov/public/do/PRAMain.* Find this particular information collection request by selecting ''Department of Education'' under ''Currently Under Review,'' then check ''Only Show ICR for Public Comment'' checkbox.

FOR FURTHER INFORMATION CONTACT: For specific questions related to collection activities, please contact Amy Bae, 202–245–8272.

SUPPLEMENTARY INFORMATION: The Department of Education (ED), in accordance with the Paperwork Reduction Act of 1995 (PRA) (44 U.S.C. 3506(c)(2)(A)), provides the general public and Federal agencies with an opportunity to comment on proposed, revised, and continuing collections of information. This helps the Department assess the impact of its information collection requirements and minimize the public's reporting burden. It also helps the public understand the Department's information collection requirements and provide the requested data in the desired format. ED is soliciting comments on the proposed information collection request (ICR) that is described below. The Department of Education is especially interested in public comment addressing the following issues: (1) Is this collection necessary to the proper functions of the Department; (2) will this information be processed and used in a timely manner; (3) is the estimate of burden accurate; (4) how might the Department enhance the quality, utility, and clarity of the information to be collected; and (5) how might the Department minimize the burden of this collection on the respondents, including through the use of information technology. Please note that written comments received in response to this notice will be considered public records.

Title of Collection: Report of Dispute Resolution Under Part C of the Individuals with Disabilities Education Act.

OMB Control Number: 1820–0678.

Type of Review: An extension of an existing information collection.

Respondents/Affected Public: State, Local, and Tribal Governments.

Total Estimated Number of Annual Responses: 56.

Total Estimated Number of Annual Burden Hours: 2,240.

Abstract: The Individuals with Disabilities Education Act (IDEA; Pub. L. 108–446) directs the Secretary of Education to obtain data on the dispute resolution process described in Section 615 of the law. This package provides instructions and form necessary for States to report the number of written, signed complaints; mediation requests; and hearing requests and the status of these actions initiated during the reporting year with regards to children served under Part C of IDEA. The form satisfies reporting requirements and is used by OSEP to monitor SEAs and for Congressional and public reporting. No adjustments were made to this data collection therefore we anticipate no change in the response burden associated with this data collection. The Department of Education is interested in public comment addressing the COVID crisis. Specially, are there any considerations to these data collections due to the national emergency caused by the novel Coronavirus disease 2019 (COVID–19). Please note that written comments received in response to this notice will be considered public records.

Dated: September 4, 2020.

Kate Mullan,

PRA Coordinator, Strategic Collections and Clearance, Governance and Strategy Division, Office of Chief Data Officer, Office of Planning, Evaluation and Policy Development.

[FR Doc. 2020–20008 Filed 9–9–20; 8:45 am]

BILLING CODE 4000–01–P

DEPARTMENT OF ENERGY

Federal Energy Regulatory Commission

[Docket No. CP20–513–000]

WBI Energy Transmission, Inc.; Notice of Request Under Blanket Authorization

Take notice that on August 24, 2020, WBI Energy Transmission, Inc. (WBI Energy), 1250 West Century Avenue, Bismarck, North Dakota filed a prior notice application pursuant to sections 157.205(b), 157.216(b) of the Federal Energy Regulatory Commission's (Commission) regulations under the Natural Gas Act (NGA), and WBI Energy's blanket certificate issued in Docket No. CP82–487–000. WBI Energy requests authorization to plug and abandon six natural gas storage wells and to abandon in place approximately 1.9 miles of associated three-inch-diameter and four-inch-diameter natural gas storage pipeline, all located in Baker Storage Field in Fallon County, Montana, all as more fully set forth in the request, which is on file with the Commission and open to public inspection.

In addition to publishing the full text of this document in the **Federal Register**, the Commission provides all interested persons an opportunity to view and/or print the contents of this document via the internet through the Commission's Home Page (*http://ferc.gov*) using the ''eLibrary'' link. Enter the docket number excluding the last three digits in the docket number field to access the document. At this time, the Commission has suspended access to the Commission's Public Reference Room, due to the proclamation declaring a National Emergency concerning the Novel Coronavirus Disease (COVID–19), issued by the President on March 13, 2020. For assistance, contact FERC at *FERCOnlineSupport@ferc.gov* or call toll-free, (886) 208–3676 or TYY, (202) 502–8659.

Any questions regarding this application should be directed to Lori Myerchin, Director of Regulatory Affairs and Transportation Services, WBI Energy Transmission, Inc., 1250 West Century Avenue, Bismarck, North Dakota 58503 at (701) 530–1563 or by email at *lori.myerchin@wbienergy.com.*

Any person or the Commission's staff may, within 60 days after issuance of the instant notice by the Commission, file pursuant to Rule 214 of the Commission's Procedural Rules (18 CFR 385.214) a motion to intervene or notice of intervention. Any person filing to intervene, or the Commission's staff may, pursuant to Section 157.205 of the regulations under the NGA (18 CFR 157.205) file a protest to the request. If no protest is filed within the time allowed therefore, the proposed activity shall be deemed to be authorized effective the day after the time allowed for filing a protest. If a protest is filed and not withdrawn within 30 days after the allowed time for filing a protest, the instant request shall be treated as an application for authorization pursuant to section 7 of the NGA.

Pursuant to section 157.9 of the Commission's rules, 18 CFR 157.9, within 90 days of this Notice the Commission staff will either: Complete its environmental assessment (EA) and place it into the Commission's public record (eLibrary) for this proceeding, or issue a Notice of Schedule for Environmental Review. If a Notice of Schedule for Environmental Review is issued, it will indicate, among other milestones, the anticipated date for the Commission staff's issuance of the final environmental impact statement (FEIS) or EA for this proposal. The filing of the EA in the Commission's public record

for this proceeding or the issuance of a Notice of Schedule for Environmental Review will serve to notify federal and state agencies of the timing for the completion of all necessary reviews, and the subsequent need to complete all federal authorizations within 90 days of the date of issuance of the Commission staff's FEIS or EA.

Persons who wish to comment only on the environmental review of this project should submit an original and two copies of their comments to the Secretary of the Commission. Environmental commenters will be placed on the Commission's environmental mailing list and will be notified of any meetings associated with the Commission's environmental review process. Environmental commenters will not be required to serve copies of filed documents on all other parties. However, the non-party commenter will not receive copies of all documents filed by other parties or issued by the Commission and will not have the right to seek court review of the Commission's final order.

The Commission strongly encourages electronic filings of comments in lieu of paper using the ''eFile'' link at *http://www.ferc.gov.* In lieu of electronic filing, you may submit a paper copy. Submissions sent via the U.S. Postal Service must be addressed to: Kimberly D. Bose, Secretary, Federal Energy Regulatory Commission, 888 First Street NE, Room 1A, Washington, DC 20426. Submissions sent via any other carrier must be addressed to: Kimberly D. Bose, Secretary, Federal Energy Regulatory Commission, 12225 Wilkins Avenue, Rockville, Maryland 20852.

Dated: September 3, 2020.

Kimberly D. Bose,

Secretary.

[FR Doc. 2020–20004 Filed 9–9–20; 8:45 am]

BILLING CODE 6717–01–P

DEPARTMENT OF ENERGY

Federal Energy Regulatory Commission

[Docket No. CP20–516–000]

Columbia Gas Transmission, LLC; Notice of Request Under Blanket Authorization

Take notice that on August 27, 2020, Columbia Gas Transmission, LLC, 700 Louisiana Street, Houston, Texas 77002–2700, filed in Docket No. CP20–516–000 a prior notice request pursuant to section 157.205 and 157.216 of the Commission's regulations under the Natural Gas Act, for authorization to abandon two injection/withdrawal wells and associated pipelines and appurtenances, located in its Medina Storage Field in Medina County, Ohio, (Medina Wells 10090 and 10116 Abandonment Project). Columbia proposes to abandon these facilities under authorities granted by its blanket certificate issued in Docket No. CP83–76–000, all as more fully set forth in the application which is on file with the Commission and open to public inspection.

The filing is available for review on the Commission's website web at *http://www.ferc.gov* using the ''eLibrary'' link. Enter the docket number excluding the last three digits in the docket number field to access the document. For assistance, contact FERC at *FERCOnlineSupport@ferc.gov* or call toll-free, (866) 208–3676 or TYY, (202) 502–8659. At this time, the Commission has suspended access to the Commission's Public Reference Room, due to the proclamation declaring a National Emergency concerning the Novel Coronavirus Disease (COVID–19), issued by the President on March 13, 2020.

Any questions concerning this application should be directed to Sorana Linder, Director, Modernization & Certificates, Columbia Gas Transmission, LLC, 700 Louisiana Street, Suite 700, Houston, Texas 77002–2700, at (832) 320–5209 or *sorana_linder@tcenergy.com.*

Any person or the Commission's staff may, within 60 days after issuance of the instant notice by the Commission, file pursuant to Rule 214 of the Commission's Procedural Rules (18 CFR 385.214) a motion to intervene or notice of intervention and pursuant to section 157.205 of the regulations under the NGA (18 CFR 157.205), a protest to the request. If no protest is filed within the time allowed therefore, the proposed activity shall be deemed to be authorized effective the day after the time allowed for filing a protest. If a protest is filed and not withdrawn within 30 days after the allowed time for filing a protest, the instant request shall be treated as an application for authorization pursuant to section 7 of the NGA.

Pursuant to section 157.9 of the Commission's rules, 18 CFR 157.9, within 90 days of this Notice the Commission staff will either: Complete its environmental assessment (EA) and place it into the Commission's public record (eLibrary) for this proceeding; or issue a Notice of Schedule for Environmental Review. If a Notice of Schedule for Environmental Review is issued, it will indicate, among other milestones, the anticipated date for the Commission staff's issuance of the EA for this proposal. The filing of the EA in the Commission's public record for this proceeding or the issuance of a Notice of Schedule for Environmental Review will serve to notify federal and state agencies of the timing for the completion of all necessary reviews, and the subsequent need to complete all federal authorizations within 90 days of the date of issuance of the Commission staff's EA.

Persons who wish to comment only on the environmental review of this project should submit an original and two copies of their comments to the Secretary of the Commission. Environmental commenter's will be placed on the Commission's environmental mailing list and will be notified of any meetings associated with the Commission's environmental review process. Environmental commenter's will not be required to serve copies of filed documents on all other parties. However, the non-party commenters, will not receive copies of all documents filed by other parties or issued by the Commission and will not have the right to seek court review of the Commission's final order.

The Commission strongly encourages electronic filings of comments, protests and interventions in lieu of paper using the ''eFile'' link at *http://www.ferc.gov.* Persons unable to file electronically may mail similar pleadings to the Federal Energy Regulatory Commission, 888 First Street NE, Washington, DC 20426. Submissions sent via any other carrier must be addressed to: Kimberly D. Bose, Secretary, Federal Energy Regulatory Commission, 12225 Wilkins Avenue, Rockville, Maryland 20852.

Dated: September 3, 2020.

Kimberly D. Bose,

Secretary.

[FR Doc. 2020–20003 Filed 9–9–20; 8:45 am]

BILLING CODE 6717–01–P

DEPARTMENT OF ENERGY

Federal Energy Regulatory Commission

[Docket No. CP19–118–000]

Trans-Foreland Pipeline Company, LLC; Notice of Availability of the Environmental Assessment for the Proposed Kenai LNG Cool Down Project

The staff of the Federal Energy Regulatory Commission (FERC or Commission) has prepared an environmental assessment (EA) for the

Kenai LNG Cool Down Project (Project) proposed by Trans-Foreland Pipeline Company, LLC (Trans-Foreland) in the above referenced docket. Trans-Foreland requests authorization to construct, install, own, and operate facilities at its existing liquified natural gas (LNG) export plant in Kenai, Alaska. Trans-Foreland states that the proposed Project would permit it to cool down the existing LNG storage tanks and associated LNG facilities by importing LNG for delivery to the storage tanks, and subsequently deliver boil-off gas (BOG) generated under normal operations from the Kenai LNG Plant to the Kenai Refinery.

The EA assesses the potential environmental effects of the construction and operation of the Project in accordance with the requirements of the National Environmental Policy Act (NEPA). The FERC staff concludes that approval of the Project, with appropriate mitigating measures, would not constitute a major federal action significantly affecting the quality of the human environment.

The U.S. Department of Energy, U.S. Department of Transportation's Pipeline and Hazardous Materials Safety Administration, and U.S. Coast Guard participated as cooperating agencies in the preparation of the EA. Cooperating agencies have jurisdiction by law or special expertise with respect to resources potentially affected by the proposal and participate in the NEPA analysis.

The Kenai LNG Cool Down Project would consist of the following facilities in Kenai, Alaska:

- A trim vaporizer unit assembly, containing 10 skid mounted units;
- a new trim vaporizer feed pump;
- a new LNG tank circulation pump;
- a 1,000 horsepower electric driven BOG booster compressor and associated building; and
- two electrical buildings.

The Commission mailed a copy of the *Notice of Availability* to federal, state, and local government representatives and agencies; elected officials; environmental and public interest groups; Native American Tribes; potentially affected landowners and other interested parties in the Project area. The EA is only available in electronic format. It may be viewed and downloaded from the FERC's website (*www.ferc.gov*), on the Environmental Documents page (*https://www.ferc.gov/industries-data/natural-gas/environment/environmental-documents*). In addition, the EA may be accessed by using the eLibrary link on the FERC's website. Click on the eLibrary link (*https://elibrary.ferc.gov/eLibrary/search*), click on General Search, and enter the docket number in the ''Docket Number'' field, excluding the last three digits (*i.e.,* CP19–118). Be sure you have selected an appropriate date range. For assistance, please contact FERC Online Support at *FercOnlineSupport@ferc.gov* or toll free at (866) 208–3676, or for TTY, contact (202) 502–8659.

The EA is not a decision document. It presents Commission staff's independent analysis of the environmental issues for the Commission to consider when addressing the merits of issues raised in this proceeding. Any person wishing to comment on the EA may do so. Your comments should focus on the EA's disclosure and discussion of potential environmental effects, reasonable alternatives, and measures to avoid or lessen environmental impacts. The more specific your comments, the more useful they will be. To ensure that the Commission has the opportunity to consider your comments prior to making its decision on this Project, it is important that we receive your comments in Washington, DC on or before 5:00 p.m. Eastern Time on October 5, 2020.

For your convenience, there are three methods you can use to submit your comments to the Commission. The Commission encourages electronic filing of comments and has staff available to assist you at (866) 208–3676 or *FercOnlineSupport@ferc.gov.* Please carefully follow these instructions so that your comments are properly recorded.

(1) You can file your comments electronically using the eComment feature on the Commission's website (*www.ferc.gov*) under the link to FERC Online. This is an easy method for submitting brief, text-only comments on a project;

(2) You can also file your comments electronically using the eFiling feature on the Commission's website (*www.ferc.gov*) under the link to FERC Online. With eFiling, you can provide comments in a variety of formats by attaching them as a file with your submission. New eFiling users must first create an account by clicking on ''eRegister.'' You must select the type of filing you are making. If you are filing a comment on a particular project, please select ''Comment on a Filing''; or

(3) You can file a paper copy of your comments by mailing them to the Commission. Be sure to reference the project docket number (CP19–118–000) on your letter. Submissions sent via the U.S. Postal Service must be addressed to: Kimberly D. Bose, Secretary, Federal Energy Regulatory Commission, 888 First Street NE, Room 1A, Washington, DC 20426. Submissions sent via any other carrier must be addressed to: Kimberly D. Bose, Secretary, Federal Energy Regulatory Commission, 12225 Wilkins Avenue, Rockville, Maryland 20852.

Filing environmental comments will not give you intervenor status, but you do not need intervenor status to have your comments considered. Only intervenors have the right to seek rehearing or judicial review of the Commission's decision. At this point in this proceeding, the timeframe for filing timely intervention requests has expired. Any person seeking to become a party to the proceeding must file a motion to intervene out-of-time pursuant to Rule 214(b)(3) and (d) of the Commission's Rules of Practice and Procedures (18 CFR 385.214(b)(3) and (d)) and show good cause why the time limitation should be waived. Motions to intervene are more fully described at *https://www.ferc.gov/ferc-online/ferc-online/how-guides.*

Additional information about the Project is available from the Commission's Office of External Affairs, at (866) 208–FERC, or on the FERC website (*www.ferc.gov*) using the eLibrary link. The eLibrary link also provides access to the texts of all formal documents issued by the Commission, such as orders, notices, and rulemakings.

In addition, the Commission offers a free service called eSubscription which allows you to keep track of all formal issuances and submittals in specific dockets. This can reduce the amount of time you spend researching proceedings by automatically providing you with notification of these filings, document summaries, and direct links to the documents. Go to *https://www.ferc.gov/ferc-online/overview* to register for eSubscription.

Dated: September 3, 2020.

Kimberly D. Bose,

Secretary.

[FR Doc. 2020–19999 Filed 9–9–20; 8:45 am]

BILLING CODE 6717–01–P

DEPARTMENT OF ENERGY

Federal Energy Regulatory Commission

[Docket No. CP20–52–000]

WBI Energy Transmission, Inc.; Notice of Revised Schedule for Environmental Review of the North Bakken Expansion Project

This notice identifies the Federal Energy Regulatory Commission (FERC or Commission) staff's revised schedule for the completion of the environmental assessment (EA) for WBI Energy Transmission, Inc.'s (WBI Energy) North Bakken Expansion Project. The first notice of schedule, issued on April 10, 2020, identified September 4, 2020 as the EA issuance date. Since issuance of the April 10 notice, WBI Energy has proposed pipeline route and facility changes and has not fully responded to a previous information request. WBI Energy stated in a letter filed to the project docket that it will file the outstanding data needed for the EA, including information regarding the route changes, on or before September 11, 2020. As a result, Commission staff has revised the schedule for issuance of the EA, based on WBI Energy filing complete information within the forthcoming data response.

Schedule for Environmental Review

Issuance of the EA—December 17, 2020
90-day Federal Authorization Decision Deadline—March 17, 2021

If a schedule change becomes necessary, an additional notice will be provided so that the relevant agencies are kept informed of the project's progress.

Additional Information

In order to receive notification of the issuance of the EA and to keep track of all formal issuances and submittals in specific dockets, the Commission offers a free service called eSubscription. This can reduce the amount of time you spend researching proceedings by automatically providing you with notification of these filings, document summaries, and direct links to the documents. Go to *https://www.ferc.gov/ferc-online/overview* to register for eSubscription.

Additional information about the project is available from the Commission's Office of External Affairs at (866) 208–FERC or on the FERC website (*www.ferc.gov*). Using the eLibrary link, enter the ''Docket Number'' excluding the last three digits (*i.e.,* CP20–52), select a date range, and follow the instructions. For assistance with access to eLibrary, the helpline can be reached at (866) 208–3676, TTY (202) 502–8659, or at *FERCOnlineSupport@ferc.gov*. The eLibrary link on the FERC website also provides access to the texts of formal documents issued by the Commission, such as orders, notices, and rule makings.

Dated: September 3, 2020.

Kimberly D. Bose,

Secretary.

[FR Doc. 2020–20002 Filed 9–9–20; 8:45 am]

BILLING CODE 6717–01–P

DEPARTMENT OF ENERGY

Federal Energy Regulatory Commission

[Docket Nos. EL20–70–000]

Tucson Electric Power Company; Notice of Petition for Declaratory Order

Take notice that on September 2, 2020, pursuant to Rule 207(a)(2) of the Federal Energy Regulatory Commission's (Commission) Rules of Practice and Procedure, 18 CFR 385.207 (2019), Tucson Electric Power Company (Petitioner) hereby submits a petition for declaratory order (Petition) requesting that the Commission issue a declaratory order granting incentive rate treatment for its purchase of development rights and subsequent development of a 64-mile transmission project to create a new circuit between Tucson Electric's Vail and Tortolita substations, as more fully explained in the petition.

Any person desiring to intervene or to protest this filing must file in accordance with Rules 211 and 214 of the Commission's Rules of Practice and Procedure (18 CFR 385.211, 385.214). Protests will be considered by the Commission in determining the appropriate action to be taken, but will not serve to make protestants parties to the proceeding. Any person wishing to become a party must file a notice of intervention or motion to intervene, as appropriate. Such notices, motions, or protests must be filed on or before the comment date. Anyone filing a motion to intervene or protest must serve a copy of that document on the Petitioner.

In addition to publishing the full text of this document in the **Federal Register**, the Commission provides all interested persons an opportunity to view and/or print the contents of this document via the internet through the Commission's Home Page (*http://ferc.gov*) using the ''eLibrary'' link. Enter the docket number excluding the last three digits in the docket number field to access the document. At this time, the Commission has suspended access to the Commission's Public Reference Room, due to the proclamation declaring a National Emergency concerning the Novel Coronavirus Disease (COVID–19), issued by the President on March 13, 2020. For assistance, contact the Federal Energy Regulatory Commission at *FERCOnlineSupport@ferc.gov* or call toll-free, (886) 208–3676 or TYY, (202) 502–8659.

The Commission strongly encourages electronic filings of comments, protests and interventions in lieu of paper using the ''eFiling'' link at *http://www.ferc.gov*. Persons unable to file electronically may mail similar pleadings to the Federal Energy Regulatory Commission, 888 First Street NE, Washington, DC 20426. Hand delivered submissions in docketed proceedings should be delivered to Health and Human Services, 12225 Wilkins Avenue, Rockville, Maryland 20852.

Comment Date: 5:00 p.m. Eastern time on October 2, 2020.

Dated: September 3, 2020.

Kimberly D. Bose,

Secretary.

[FR Doc. 2020–20000 Filed 9–9–20; 8:45 am]

BILLING CODE 6717–01–P

FARM CREDIT ADMINISTRATION

Privacy Act of 1974; System of Records

AGENCY: Farm Credit Administration.

ACTION: Notice of a modified system of records.

SUMMARY: Pursuant to the provisions of the Privacy Act of 1974, as amended, notice is hereby given that the Farm Credit Administration (FCA or Agency) is amending an existing system of records, FCA–2—Financial Management Records—FCA.

DATES: You may send written comments on or before October 13, 2020. FCA filed an amended System Report with Congress and the Office of Management and Budget on August 5, 2020. This notice will become effective without further publication on October 20, 2020 unless modified by a subsequent notice to incorporate comments received from the public.

ADDRESSES: We offer a variety of methods for you to submit your comments. For accuracy and efficiency, commenters are encouraged to submit comments by email or through the FCA's website. As facsimiles (faxes) are difficult for us to process and achieve

compliance with section 508 of the Rehabilitation Act, we are no longer accepting comments submitted by fax. Regardless of the method you use, please do not submit your comment multiple times via different methods. You may submit comments by any of the following methods:

• *Email:* Send us an email at *reg-comm@fca.gov*.

• *FCA Website: http://www.fca.gov.* Click inside the ''I want to . . .'' field, near the top of the page; select ''comment on a pending regulation'' from the dropdown menu; and click ''Go.'' This takes you to an electronic public comment form.

• *Mail:* David Grahn, Director, Office of Regulatory Policy, Farm Credit Administration, 1501 Farm Credit Drive, McLean, VA 22102–5090.

You may review copies of comments we receive at our office in McLean, Virginia, or from our website at *http://www.fca.gov*. Once you are in the website, click inside the ''I want to . . .'' field, near the top of the page; select ''find comments on a pending regulation'' from the dropdown menu; and click ''Go.'' This will take you to the Comment Letters page, where you can select the SORN for which you would like to read public comments. The comments will be posted as submitted but, for technical reasons, items such as logos and special characters may be omitted. Identifying information that you provide, such as phone numbers and addresses, will be publicly available. However, we will attempt to remove email addresses to help reduce internet spam.

FOR FURTHER INFORMATION CONTACT: Autumn R. Agans, Privacy Act Officer, Farm Credit Administration, McLean, Virginia 22102–5090, (703) 883–4020, TTY (703) 883–4019.

SUPPLEMENTARY INFORMATION: This publication satisfies the requirement of the Privacy Act of 1974 that agencies publish a system of records notice in the **Federal Register** when there is a revision, change, or addition to the system of records. The Financial Management Records—FCA system is used to provide records of payments to and collections from employees for compensation and expenses, to provide payments to vendors and other Government agencies, to maintain control over the collection and disbursement of Agency funds and to limit the opportunity for fraud, to prepare reports for management and other Government agencies, to obtain necessary information for the issuance and payment of credit cards, and to assist in any audits. The Agency is updating the notice to reflect changes to the categories of individuals and categories of records maintained by the system, and to make administrative updates as well as non-substantive changes to conform to the SORN template requirements prescribed in the Office of Management and Budget (OMB) Circular No. A–108. The substantive changes and modifications to the currently published version of FCA–2—Financial Management Records—FCA include:

1. Identifying the records in the system as unclassified.
2. Updating the system location to reflect the system's current location.
3. Updating the system managers to reflect the system's current owner.
4. Expanding and clarifying the categories of records and individuals to ensure they are consistent with the intended purpose for which the records are collected.
5. Expanding and clarifying how records may be stored and retrieved.
6. Revising the retention and disposal section to reflect updated guidance from the National Archives and Records Administration.
7. Revising the safeguards section to reflect updated cybersecurity guidance and practices.

Additionally, non-substantive changes have been made to the notice to align with the latest guidance from OMB.

The amended system of records is: FCA–2—Financial Management Records—FCA. As required by 5 U.S.C. 552a(r) of the Privacy Act, as amended, FCA sent notice of this proposed system of records to the Office of Management and Budget, the Committee on Oversight and Government Reform of the House of Representatives, and the Committee on Homeland Security and Governmental Affairs of the Senate. The notice is published in its entirety below.

SYSTEM NAME AND NUMBER:

FCA–2—Financial Management Records—FCA.

SECURITY CLASSIFICATION:

Unclassified.

SYSTEM LOCATION:

Office of the Chief Financial Officer, Farm Credit Administration, 1501 Farm Credit Drive, McLean, VA 22102–5090.

SYSTEM MANAGER:

Chief Financial Officer, Office of the Chief Financial Officer, Farm Credit Administration, 1501 Farm Credit Drive, McLean, VA 22102–5090.

AUTHORITY FOR MAINTENANCE OF THE SYSTEM:

12 U.S.C. 2243, 2252.

PURPOSES OF THE SYSTEM:

We use information in this system of records to provide records of payments to and collections from employees for compensation and expenses, to provide payments to vendors and other Government agencies, to maintain control over the collection and disbursement of Agency funds and to limit the opportunity for fraud, to prepare reports for management and other Government agencies, to obtain necessary information for the issuance and payment of credit cards, and to assist in any audits.

CATEGORIES OF INDIVIDUALS COVERED BY THE SYSTEM:

Current and former FCA employees, contractors, suppliers, and persons that provide or have provided supplies or services or performed work for FCA.

CATEGORIES OF RECORDS IN THE SYSTEM:

Information may include: (1) Individual name(s), position or title, Social Security number (SSN); employee ID number, Taxpayer Identification Number (TIN) or similar; (2) employee travel records, including advances and travel vouchers; (3) bank routing and account number, loan numbers, receivable reference numbers, and similar; and (4) purchase related records including vendor vouchers, purchase orders, requisitions, FCA administrative expenses, collections, purchase, travel, and fleet credit card records, and other pertinent written information related to financial records and purchase transactions. Also included are bids, offers, and lease agreements.

This system covers general financial records not otherwise included in government wide system of records notices, including GSA/GOVT–3, GSA/GOVT–4, and GSA/GOVT–6. This system complements those systems, and in some cases, the notice incorporates by reference but does not repeat all the information contained in those systems.

RECORD SOURCE CATEGORIES:

Information in this system of records comes from: (1) The individual to whom the record applies; (2) persons, corporations, or governmental entities that make bids or offers to FCA or enter into leases or other agreements with FCA; (3) credit reporting agencies; and (4) FCA employees who prepare or audit contractual actions.

ROUTINE USES OF RECORDS MAINTAINED IN THE SYSTEM, INCLUDING CATEGORIES OF USERS AND PURPOSES OF SUCH USES:

See the ''General Statement of Routine Uses'' (64 FR 8175).

Disclosure to consumer reporting agencies: None.

POLICIES AND PRACTICES FOR STORAGE OF RECORDS:

Records are maintained in file folders and electronically in a computerized database.

POLICIES AND PRACTICES FOR RETRIEVAL OF RECORDS:

Records are retrieved by (1) SF1166a (Voucher and Schedule of Payments) voucher number by year; (2) individual or vendor name; (3) Social Security number or Tax Identification Number (as applicable) and (4) purchase order or contract number; or some combination thereof.

POLICIES AND PROCEDURES FOR RETENTION AND DISPOSAL OF RECORDS:

Records are retained in accordance with the National Archives and Records Administration's General Records Schedule requirements for financial and procurement records, and with the FCA Comprehensive Records Schedule.

ADMINSITRATIVE, TECHNICAL, AND PHYSICAL SAFEGUARDS:

FCA implements multiple layers of security to ensure access to records is limited to those with a need-to-know in support of their official duties. Records are physically safeguarded in a secured environment using locked file rooms, file cabinets, or locked offices and other physical safeguards. Computerized records are safeguarded through use of user roles, passwords, firewalls, encryption, and other information technology security measures. Only personnel with a need-to-know in support of their duties have access to the records.

RECORD ACCESS PROCEDURES:

To obtain a record, contact: Privacy Act Officer, Farm Credit Administration, 1501 Farm Credit Drive, McLean, VA 22102–5090, as provided in 12 CFR part 603.

CONTESTING RECORD PROCEDURES:

Direct requests for amendments to a record to: Privacy Act Officer, Farm Credit Administration, 1501 Farm Credit Drive, McLean, VA 22102–5090, as provided in 12 CFR part 603.

NOTIFICATION PROCEDURE:

Address inquiries about this system of records to: Privacy Act Officer, Farm Credit Administration, McLean, VA 22102–5090.

EXEMPTIONS PROMULGATED FOR THE SYSTEM:

None.

HISTORY:

Federal Register Vol. 64, No. 100/ Tuesday, May 25, 1999 page 21875.

Vol. 70, No. 183/Thursday, September 22, 2005, page 55621.

Dated: September 4, 2020.

Dale Aultman,

Secretary, Farm Credit Administration Board.

[FR Doc. 2020–19995 Filed 9–9–20; 8:45 am]

BILLING CODE 6705–01–P

FEDERAL TRADE COMMISSION

Public Workshop Examining Franchise Rule

AGENCY: Federal Trade Commission.

ACTION: Public workshop; request for public comment.

SUMMARY: The Federal Trade Commission (''FTC'' or ''Commission'') is holding a public workshop relating to its March 13, 2019 Request for Public Comment on the Franchise Rule (''2019 Request for Comment''). The workshop will explore issues relating to the Franchise Rule's disclosure requirements, the Rule's prohibitions against disclaimers, and other issues raised in comments received in response to the 2019 Request for Comment.

DATES: The public workshop will be held on November 10, 2020, from 1:00 p.m. until 4:30 p.m. ET. The workshop will be held online. Requests to participate as a panelist must be received by October 1, 2020. Any written comments related to the issues discussed at the workshop must be received by December 17, 2020.

ADDRESSES: Interested parties may file a comment or a request to participate as a panelist online or on paper, by following the instructions in the Filing Comments and Requests to Participate as a Panelist part of the **SUPPLEMENTARY INFORMATION** section below.

FOR FURTHER INFORMATION CONTACT: Christine M. Todaro (202–326–3711), Division of Marketing Practices, Bureau of Consumer Protection, Federal Trade Commission, 600 Pennsylvania Avenue NW, Washington, DC 20580.

SUPPLEMENTARY INFORMATION:

I. Introduction

The Commission issued the original Franchise Rule pursuant to its authority under Section 5 of the Federal Trade Commission Act to proscribe unfair or deceptive acts or practices.[1] The primary purpose of the Rule is to provide prospective purchasers of franchises the material information they need in order to weigh the risks and benefits of such an investment by providing disclosure requirements in a uniform format that facilitates comparison shopping.[2] The Commission adopted the Rule on December 21, 1978, and it became fully effective on July 21, 1979.[3]

In 1995, the Commission announced a regulatory review of the Franchise Rule.[4] That proceeding, which concluded that the Rule was still needed but could be improved, led to amendments to the Rule issued in 2007 (the ''Amended Rule''), which took effect on July 1, 2008.[5] The Amended Rule, among other changes, sought to reduce inconsistencies between federal and state pre-sale disclosure requirements and established a set of uniform disclosure requirements in a Franchise Disclosure Document (''FDD''). Commission staff has continued to work closely with state franchise regulators to promote uniformity regarding franchise disclosure requirements.

The Amended Rule requires franchisors to provide prospective franchisees with their FDD at least 14 calendar days before they make any payment or sign a binding agreement in connection with a proposed franchise sale.[6] The FDD provides prospective franchise purchasers with 23 items of information material to their investment decision, including the initial fees and estimated initial investment required; the litigation and bankruptcy history of the franchisor, its officers and key executives; the financial performance of existing company owned and franchised outlets; contact information for current and former franchisees; and financial statements reflecting the ability of the franchisor to provide promised services and support. The FDD also includes required disclosure of any restrictions on the sources of goods and services and any required purchases; a franchisee's contractual obligations in the establishment and operation of the franchise; the terms of any financing offered by the franchisor; the training and assistance provided by the franchisor; the extent to which the franchisee's outlet is protected from

[1] Section 5(a) of the Federal Trade Commission Act, 15 U.S.C. 45(a), prohibits ''unfair or deceptive acts or practices in or affecting commerce.''

[2] Original Franchise Rule Statement of Basis and Purpose (''Original SBP''), 43 FR 59614 (Dec. 21, 1978).

[3] *Id.*

[4] 60 FR 17656 (Apr. 7, 1995).

[5] Amended Franchise Rule Statement of Basis and Purpose (''Amended Rule SBP''), 72 FR 15444 (Mar. 30, 2007).

[6] 16 CFR 436.2(a).

competition by the franchisor and other franchisees; any restrictions on what the franchisee may sell; the circumstances in which the franchise may be prematurely terminated, or the franchisee's sale or renewal of the franchise refused by the franchisor; how and where any disputes will be resolved; any restrictions on the franchisee's ability to engage in the same or similar business during and after the termination of the franchise; and the number of outlets created, sold, and closed during the past three years. In addition, if the franchisor makes a financial performance representation, the representation must be disclosed in the FDD.

On March 13, 2019, the Commission solicited comments on the Amended Rule as part of its periodic review of its rules and guides.[7] The Commission sought comment on a number of general issues, including whether there is a continuing need for the Rule; what modifications, if any, should be made to the Rule to increase its benefits to prospective franchisees; and what modifications, if any, should be made to the Rule to account for changes in relevant technology or economic conditions. The Commission received 39 comments from individuals and entities representing a wide range of viewpoints.[8] All commenters agreed that there is a continuing need for the Rule.[9] Several commenters, however, proposed changes to the Rule, including to the form and substance of the disclosures.

II. Issues for Discussion at the Workshop

As part of the Franchise Rule regulatory review, the FTC has decided to seek additional information about the proposed modifications raised by the commenters. The workshop will cover such topics as:

(1) Item 19 financial performance representations;

(2) The use of disclaimers; and

(3) The format of the FDD.

An agenda will be published at a later date, in advance of the scheduled workshop.

III. Public Participation Information

A. Workshop Attendance

The workshop is free and open to the public, and will be held online. It will be webcast live on the FTC's website. This event may be photographed, videotaped, webcast, or otherwise recorded. By participating in this event, you are agreeing that your image—and anything you say or submit—may be posted indefinitely at *https://www.ftc.gov* or on one of the Commission's publicly available social media sites.

B. Requests To Participate as a Panelist

The workshop will be organized into panels, which will address the designated topics. Panelists will be selected by FTC staff. Other attendees will have an opportunity to comment and ask questions. The Commission will place a transcript of the proceeding on the public record. Requests to participate as a panelist must be received on or before October 1, 2020, as explained in Section IV below. Persons selected as panelists will be notified on or before October 17, 2020.

Disclosing funding sources promotes transparency, ensures objectivity, and maintains the public's trust. If chosen, prospective panelists will be required to disclose the source of any support they received in connection with participation at the workshop. This information will be included in the published panelist bios as part of the workshop record.

C. Electronic and Paper Comments

The submission of comments is not required for participation in the workshop. If a person wishes to submit electronic or paper comments related to the issues discussed at the workshop, such comments should be filed as prescribed in Section IV, and must be received on or before December 17, 2020.

IV. Filing Comments and Requests To Participate as a Panelist

You can file a comment, or request to participate as a panelist, online or on paper. The deadline to file a comment is December 17, 2020. For Commission staff to consider your request to participate as a panelist, we must receive it by October 1, 2020. Write ''Franchise Rule, 16 CFR 436, Comment, Matter No. R511003'' on your comment and ''Franchise Rule, 16 CFR 436, Request to Participate, Matter No. R511003'' on your request to participate. Your comment—including your name and your state—will be placed on the public record of this proceeding, including *https://www.regulations.gov.*

Due to the public health emergency in response to the COVID–19 outbreak and the agency's heightened security screening, postal mail addressed to the Commission will be subject to delay. We strongly encourage you to submit your comments online through the *https://www.regulations.gov* website. To make sure that the Commission considers your online comment, follow the instructions on the web-based form.

Because your comment will be placed on the public record, you are solely responsible for making sure that your comment does not include sensitive or confidential information. In particular, your comment should not include any sensitive personal information, such as your or anyone else's Social Security number; date of birth; driver's license number or other state identification number, or foreign country equivalent; passport number, financial account number, or credit or debit card number. You are also solely responsible for making sure that your comment does not include sensitive health information, such as medical records or other individually identifiable health information. In addition, your comment should not include any ''trade secret or any commercial or financial information which . . . is privileged or confidential''—as provided by Section 6(f) of the FTC Act, 15 U.S.C. 46(f), and FTC Rule 4.10(a)(2), 16 CFR 4.10(a)(2)—including in particular competitively sensitive information such as costs, sales statistics, inventories, formulas, patterns, devices, manufacturing processes, or customer names.

Comments containing material for which confidential treatment is requested must be filed in paper form, must be clearly labeled ''Confidential,'' and must comply with FTC Rule 4.9(c). In particular, the written request for confidential treatment that accompanies the comment must include the factual and legal basis for the request, and must identify the specific portions of the comments to be withheld from the public record.[10] Your comment will be kept confidential only if the General Counsel grants your request in accordance with the law and the public interest. Once your comment has been posted on the *https://www.regulations.gov* website—as legally required by FTC Rule 4.9(b)—we cannot redact or remove your comment from that website, unless you submit a confidentiality request that meets the

[7] Franchise Rule, Request for Comment, 84 FR 9051 (March 13, 2019).

[8] The comments are posted at: *https://www.regulations.gov/document?D=FTC-2019-0014-0001.* The Commission has assigned each comment a number appearing after the name of the commenter and the date of submission. This notice cites comments using the last name of the individual submitter or the name of the organization, followed by the number assigned by the Commission.

[9] *See, e.g.,* International Franchise Association, FTC–2019–0014–0008; Congress of the United States—Members of Congress, FTC–2019–0014–0003; North American Securities Administrators Association, Inc., FTC–2019–0014–0032.

[10] *See* 16 CFR 4.9(c).

requirements for such treatment under FTC Rule 4.9(c), and the General Counsel grants that request.

Requests to participate as a panelist at the workshop should be submitted electronically to *franchiserule@ftc.gov,* or, if mailed, should be submitted in the manner detailed below. Parties are asked to include in their requests a brief statement setting forth their expertise in or knowledge of the issues on which the workshop will focus as well as their contact information, including a telephone number and email address (if available), to enable the FTC to notify them if they are selected.

If you file your comment or request on paper, write ''Franchise Rule, 16 CFR part 436, Comment, Matter No. R511003'' on your comment and on the envelope or ''Franchise Rule, 16 CFR part 436, Request to Participate, Matter No. R511003,'' on your request and on the envelope, and mail your comment or request to the following address: Federal Trade Commission, Office of the Secretary, 600 Pennsylvania Avenue NW, Suite CC–5610 (Annex F), Washington, DC 20580, or deliver your comment or request to the following address: Federal Trade Commission, Office of the Secretary, Constitution Center, 400 7th Street SW, 5th Floor, Suite 5610 (Annex F). If possible, submit your paper comment or request to the Commission by courier or overnight service.

Visit the Commission website at *https://www.ftc.gov* to read this Notice and the news release describing it. The FTC Act and other laws that the Commission administers permit the collection of public comments to consider and use in this proceeding as appropriate. The Commission will consider all timely and responsive public comments that it receives on or before December 17, 2020. The Commission will consider all timely requests to participate as a panelist in the workshop that it receives by October 1, 2020. For information on the Commission's privacy policy, including routine uses permitted by the Privacy Act, see *https://www.ftc.gov/site-information/privacy-policy.*

By direction of the Commission, Commissioner Slaughter not participating.

April J. Tabor,

Acting Secretary.

[FR Doc. 2020–20006 Filed 9–9–20; 8:45 am]

BILLING CODE 6750–01–P

DEPARTMENT OF HEALTH AND HUMAN SERVICES

Administration for Children and Families

Proposed Information Collection Activity; Child Care and Development Fund Plan for States/Territories for FFY 2022–2024 (ACF–118; OMB #0970–0114)

AGENCY: Office of Child Care, Administration for Children and Families, HHS.

ACTION: Request for public comment.

SUMMARY: The Administration for Children and Families (ACF) is requesting a 3-year extension of the form ACF–118: Child Care and Development Fund Plan for States/Territories (OMB #0970–0114, expiration 12/31/2021) for FFY 2022–2024. There are changes requested to the form to improve formatting and streamline questions.

DATES: *Comments due within 60 days of publication.* In compliance with the requirements of Section 3506(c)(2)(A) of the Paperwork Reduction Act of 1995, the ACF is soliciting public comment on the specific aspects of the information collection described above.

ADDRESSES: Copies of the proposed collection of information can be obtained and comments may be forwarded by emailing *infocollection@acf.hhs.gov.* Alternatively, copies can also be obtained by writing to the Administration for Children and Families, Office of Planning, Research, and Evaluation (OPRE), 330 C Street SW, Washington, DC 20201, Attn: ACF Reports Clearance Officer. All requests, emailed or written, should be identified by the title of the information collection.

SUPPLEMENTARY INFORMATION:

Description: The Child Care and Development Fund (CCDF) Plan (the Plan) for States and Territories is required from each CCDF Lead agency in accordance with Section 658E of the Child Care and Development Block Grant Act of 1990 (CCDBG Act), as amended, CCDBG Act of 2014 (Pub. L. 113–186), and 42 U.S.C. 9858. The Plan, submitted on the ACF–118, is required triennially, and remains in effect for 3 years. The Plan provides ACF and the public with a description of, and assurance about the states' and territories' child care programs. These Plans are the applications for CCDF funds.

Respondents: State and Territory Lead Agencies.

ANNUAL BURDEN ESTIMATES

Instrument	Total number of respondents	Total number of responses per respondent	Average burden hours per response	Total burden hours	Annual burden hours
Child Care and Development Fund Plan for States and Territories (ACF–118)	56	1	200	11,200	3,733

Estimated Total Annual Burden Hours: 3,733.

Comments: The Department specifically requests comments on (a) whether the proposed collection of information is necessary for the proper performance of the functions of the agency, including whether the information shall have practical utility; (b) the accuracy of the agency's estimate of the burden of the proposed collection of information; (c) the quality, utility, and clarity of the information to be collected; and (d) ways to minimize the burden of the collection of information on respondents, including through the use of automated collection techniques or other forms of information technology. Consideration will be given to comments and suggestions submitted within 60 days of this publication.

Authority: Pub. L. 113–186 and 42 U.S.C. 9858.

John M. Sweet, Jr.,

ACF/OPRE Certifying Officer.

[FR Doc. 2020–19973 Filed 9–9–20; 8:45 am]

BILLING CODE 4184–43–P

DEPARTMENT OF HEALTH AND HUMAN SERVICES

Request for Information (RFI): Testing for Coronavirus Disease 2019 (COVID–19)—Surge Capacity

AGENCY: Office of the Assistant Secretary for Health, Office of the Secretary, Department of Health and Human Services (HHS).

ACTION: Request for information.

SUMMARY: The Office of the Assistant Secretary for Health (OASH) in the Department of Health and Human Services (HHS) seeks to obtain information regarding the ability of Clinical Laboratory Improvement Amendments (CLIA)-certified/accredited commercial, academic, medical center, and public health laboratories to feasibly provide additional COVID–19 testing capability if supplementary testing instruments were made available. A set of questions is available in the Supplementary Information section below.

DATES: To be considered, comments must be received electronically at the email address provided below, no later than 5:00 p.m. Eastern Time (ET) on September 21, 2020.

ADDRESSES: Individuals are encouraged to submit responses electronically to LCDR Natalie Gibson, 200 Independence Avenue SW, Washington, DC 20201, (240) 743–1757, *COVID19TestSupplies@hhs.gov*.

Please indicate ''RFI RESPONSE'' in the subject line of your email. Submissions received after the deadline will not be reviewed. Responses to this notice are not offers and cannot be accepted by the federal government to form a binding contract or issue a grant. Respond concisely and in plain language. You may use any structure or layout that presents your information well. You may respond to some or all of our questions, and you can suggest other factors or relevant questions. You may also include links to online material or interactive presentations. Clearly mark any proprietary information, and place it in its own section or file. Your response will become government property, and we may publish some of its non-proprietary content.

SUPPLEMENTARY INFORMATION: HHS is working together with state, local, tribal and territorial governments, public health officials, health care providers, researchers, private sector organizations, and the public to execute a whole-of-America response to the COVID–19 pandemic to protect the health and safety of the American people. Timely and accurate diagnostic testing is paramount to the response. Diagnostic testing must be maximized across all platforms and venues to enable early detection, containment of potential outbreaks, and protect all Americans—especially the vulnerable and otherwise high-risk populations.

In order to expand diagnostic testing capacity and fully leverage the national testing ecosystem, the purpose of this request for information (RFI) is to obtain information regarding the ability of CLIA-certified or accredited commercial, academic, medical center and public health laboratories to feasibly provide additional testing capability if supplementary testing instruments and reagents from Thermo Fisher Scientific were made available. Because HHS is seeking to significantly expand testing capability, responses that propose substantial increases in capability, and provide adequate justification (*e.g.,* can demonstrate the necessary personnel, infrastructure and other ancillary support needs to accommodate such expansions) are preferred.

We encourage eligible performers to answer the follow questions:

- Do you represent a CLIA-certified or accredited laboratory?
- What is your current laboratory testing capacity (*e.g.,* installed base of platforms, throughput, level of personnel, etc.)?
- What is your current ability to accession specimens and report out laboratory results in no less than 24–48 hours?
- What level of additional capacity could your laboratory provide if additional testing instruments were made available?
  - Please provide a proposed request for instruments and any other requirements.

Please provide a timeline for implementation of increased capacity, assuming the laboratory receives the requested instruments.

This information will inform the ongoing response to the COVID–19 pandemic.

Dated: September 3, 2020.

Tammy R. Beckham,

Director, COVID–19 Laboratory Testing and Diagnostics Working Group.

[FR Doc. 2020–19998 Filed 9–9–20; 8:45 am]

BILLING CODE 4150–28–P

DEPARTMENT OF HEALTH AND HUMAN SERVICES

Meeting of the Advisory Committee on Blood and Tissue Safety and Availability

AGENCY: Office of the Assistant Secretary for Health, Office of the Secretary, Department of Health and Human Services.

ACTION: Notice.

SUMMARY: As required by the Federal Advisory Committee Act, the U.S. Department of Health and Human Services is hereby giving notice that the Advisory Committee on Blood and Tissue Safety and Availability (ACBTSA) will hold a meeting. The meeting will be open to the public.

At the August ACBTSA meeting, the committee voted to form work groups to further develop and prioritize actionable recommendations to the Assistant Secretary for Health. For this meeting, the committee will discuss and vote on recommendations from the work groups to improve the blood community's response to future public health emergencies.

DATES: The meeting will take place virtually on Friday, September 25, 2020 from approximately 1:00 p.m.–4:00 p.m. ET. Meeting times are tentative and subject to change. The confirmed times and agenda items for the meeting will be posted on the ACBTSA web page at *https://www.hhs.gov/oidp/advisory-committee/blood-tissue-safety-availability/meetings/2020-09-25/index.html* when this information becomes available.

FOR FURTHER INFORMATION CONTACT: James Berger, Designated Federal Officer for the ACBTSA; Office of Infectious Disease and HIV/AIDS Policy, Office of the Assistant Secretary for Health, Department of Health and Human Services, Mary E. Switzer Building, 330 C Street SW, Suite L600, Washington, DC 20024. Email: *ACBTSA@hhs.gov;* Phone: 202–795–7608.

SUPPLEMENTARY INFORMATION: The registration link for the meeting will be posted at *https://www.hhs.gov/oidp/advisory-committee/blood-tissue-safety-availability/meetings/2020-09-25/index.html* when it becomes available. After registering, you will receive an email confirmation.

The public will have an opportunity to present their views to the ACBTSA orally during the meeting's public comment session or by submitting a written public comment. Comments should be pertinent to the meeting discussion. Persons who wish to

provide verbal or written public comment should review instructions at *https://www.hhs.gov/oidp/advisory-committee/blood-tissue-safety-availability/meetings/2020-09-25/index.html* and respond by midnight September 18, 2020 ET. Verbal comments will be limited to three minutes each to accommodate as many speakers as possible.

The ACBTSA provides advice to the Secretary through the Assistant Secretary for Health. The Committee advises on a range of policy issues to include: (1) Identification of public health issues through surveillance of blood and tissue safety issues with national survey and data tools; (2) identification of public health issues that affect availability of blood, blood products, and tissues; (3) broad public health, ethical, and legal issues related to the safety of blood, blood products, and tissues; (4) the impact of various economic factors (*e.g.,* product cost and supply) on safety and availability of blood, blood products, and tissues; (5) risk communications related to blood transfusion and tissue transplantation; and (6) identification of infectious disease transmission issues for blood, organs, blood stem cells and tissues. The Committee has met regularly since its establishment in 1997.

Dated: September 2, 2020.

James J. Berger,

Designated Federal Officer, Advisory Committee on Blood and Tissue Safety and Availability, Office of Infectious Disease and HIV/AIDS Policy.

[FR Doc. 2020–19990 Filed 9–9–20; 8:45 am]

BILLING CODE 4150–28–P

DEPARTMENT OF HEALTH AND HUMAN SERVICES

National Institutes of Health

National Institute on Aging; Notice of Closed Meetings

Pursuant to section 10(d) of the Federal Advisory Committee Act, as amended, notice is hereby given of the following meetings.

The meetings will be closed to the public in accordance with the provisions set forth in sections 552b(c)(4) and 552b(c)(6), Title 5 U.S.C., as amended. The grant applications and the discussions could disclose confidential trade secrets or commercial property such as patentable material, and personal information concerning individuals associated with the grant applications, the disclosure of which would constitute a clearly unwarranted invasion of personal privacy.

Name of Committee: National Institute on Aging Special Emphasis Panel; R24\R25 Diversity in Aging Research.

Date: October 6, 2020.

Time: 10:00 a.m. to 1:30 p.m.

Agenda: To review and evaluate grant applications.

Place: National Institute on Aging, Gateway Building, 7201 Wisconsin Avenue, Bethesda, MD 20892 (Video Meeting).

Contact Person: Carmen Moten, Ph.D., MPH, Scientific Review Officer, Scientific Review Branch, National Institute on Aging, National Institutes of Health, Gateway Bldg., 2C212, 7201 Wisconsin Avenue, Bethesda, MD 20814, (301) 402–7703, *cmoten@mail.nih.gov.*

Name of Committee: National Institute on Aging Special Emphasis Panel; P01 Natives in Alzheimer's Research.

Date: October 13, 2020.

Time: 1:00 p.m. to 5:00 p.m.

Agenda: To review and evaluate grant applications.

Place: National Institute on Aging, Gateway Building, 7201 Wisconsin Avenue, Bethesda, MD 20892 (Video Meeting).

Contact Person: Carmen Moten, Ph.D., MPH, Scientific Review Officer, Scientific Review Branch, National Institute on Aging, National Institutes of Health, Gateway Bldg., 2C212, 7201 Wisconsin Avenue, Bethesda, MD 20814, (301) 402–7703, *cmoten@mail.nih.gov.*

Name of Committee: National Institute on Aging Special Emphasis Panel; Cardiometabolic Health in Estrogen Cognition Treatment.

Date: October 14, 2020.

Time: 12:30 p.m. to 4:30 p.m.

Agenda: To review and evaluate grant applications.

Place: National Institute on Aging, Gateway Building, 7201 Wisconsin Avenue, Bethesda, MD 20892 (Video Meeting).

Contact Person: Joshua Jin-Hyouk Park, Ph.D., Scientific Review Officer, Scientific Review Branch, National Institute on Aging, National Institutes of Health, Gateway Building 2W200, 7201 Wisconsin Avenue, Bethesda, MD 20892, (301) 496–6208, *joshua.park4@nih.gov.*

(Catalogue of Federal Domestic Assistance Program Nos. 93.866, Aging Research, National Institutes of Health, HHS)

Dated: September 3, 2020.

Miguelina Perez,

Program Analyst, Office of Federal Advisory Committee Policy.

[FR Doc. 2020–19931 Filed 9–9–20; 8:45 am]

BILLING CODE 4140–01–P

DEPARTMENT OF HEALTH AND HUMAN SERVICES

National Institutes of Health

National Institute On Aging; Notice of Closed Meetings

Pursuant to section 10(d) of the Federal Advisory Committee Act, as amended, notice is hereby given of the following meetings.

The meetings will be closed to the public in accordance with the provisions set forth in sections 552b(c)(4) and 552b(c)(6), Title 5 U.S.C., as amended. The grant applications and the discussions could disclose confidential trade secrets or commercial property such as patentable material, and personal information concerning individuals associated with the grant applications, the disclosure of which would constitute a clearly unwarranted invasion of personal privacy.

Name of Committee: National Institute on Aging Special Emphasis Panel; Rejuvenation mechanisms.

Date: October 19, 2020.

Time: 11:00 a.m. to 5:00 p.m.

Agenda: To review and evaluate grant applications.

Place: National Institute on Aging, Gateway Building, 7201 Wisconsin Avenue, Bethesda, MD 20892 (Video Meeting).

Contact Person: Nijaguna Prasad, Ph.D., Scientific Review Officer, Scientific Review Branch, National Institute on Aging, National Institutes of Health, 7201 Wisconsin Avenue, Gateway Building, Suite 2W200, Bethesda, MD 20892, (301) 496–9667, *nijaguna.prasad@nih.gov.*

Name of Committee: National Institute on Aging Special Emphasis Panel; Infrastructure Development.

Date: October 26, 2020.

Time: 2:00 p.m. to 6:00 p.m.

Agenda: To review and evaluate grant applications.

Place: National Institute on Aging, Gateway Building, 7201 Wisconsin Avenue, Bethesda, MD 20892 (Video Meeting).

Contact Person: Dario Dieguez, Jr, Ph.D., Scientific Review Officer, Scientific Review Branch, National Institute on Aging, National Institutes of Health, Gateway Building, Suite 2W200, 7201 Wisconsin Avenue, Bethesda, MD 20892, (301) 827–3101, *dario.dieguez@nih.gov.*

Name of Committee: National Institute on Aging Special Emphasis Panel; Fractured Aged Bone Healing and Pain Control.

Date: October 28, 2020.

Time: 8:30 a.m. to 12:30 p.m.

Agenda: To review and evaluate grant applications.

Place: National Institute on Aging, Gateway Building, 7201 Wisconsin Avenue, Bethesda, MD 20892 (Video Meeting).

Contact Person: Joshua Jin-Hyouk Park, Ph.D., Scientific Review Officer, Scientific Review Branch, National Institute on Aging, National Institutes of Health, Gateway Building, 2W200, 7201 Wisconsin Avenue, Bethesda, MD 20892, (301) 496–6208, *joshua.park4@nih.gov.*

(Catalogue of Federal Domestic Assistance Program Nos. 93.866, Aging Research, National Institutes of Health, HHS)

Dated: September 3, 2020.

Miguelina Perez,

Program Analyst, Office of Federal Advisory Committee Policy.

[FR Doc. 2020–19936 Filed 9–9–20; 8:45 am]

BILLING CODE 4140–01–P

DEPARTMENT OF HEALTH AND HUMAN SERVICES

National Institutes of Health

National Institute of Biomedical Imaging and Bioengineering; Notice of Closed Meeting

Pursuant to section 10(d) of the Federal Advisory Committee Act, as amended, notice is hereby given of a meeting of the National Institute of Biomedical Imaging and Bioengineering Special Emphasis Panel.

The meetings will be closed to the public in accordance with the provisions set forth in sections 552b(c)(4) and 552b(c)(6), Title 5 U.S.C., as amended. The grant applications and the discussions could disclose confidential trade secrets or commercial property such as patentable material, and personal information concerning individuals associated with the grant applications, the disclosure of which would constitute a clearly unwarranted invasion of personal privacy.

Name of Committee: National Institute of Biomedical Imaging and Bioengineering Special Emphasis Panel; ESTEEMED Research Education Experiences (R25) Program Review SEP.

Date: October 27, 2020.

Time: 10:00 a.m. to 3:00 p.m.

Agenda: To review and evaluate grant applications.

Place: National Institutes of Health, Two Democracy Plaza, 6707 Democracy Boulevard, Bethesda, MD 20892 (Virtual Meeting).

Contact Person: Dennis Hlasta, Ph.D., Scientific Review Officer, National Institute of Biomedical Imaging and Bioengineering, National Institutes of Health, 6707 Democracy Blvd., Bethesda, MD 20892, (301) 451–4794, *dennis.hlasta@mail.nih.gov*.

Name of Committee: National Institute of Biomedical Imaging and Bioengineering Special Emphasis Panel; P41 BTRC Review F–SEP.

Date: October 30, 2020.

Time: 9:00 a.m. to 7:00 p.m.

Agenda: To review and evaluate grant applications.

Place: National Institutes of Health, Two Democracy Plaza, 6707 Democracy Plaza, Bethesda, MD 20892 (Virtual Meeting).

Contact Person: Dennis Hlasta, Ph.D., Scientific Review Officer, National Institute of Biomedical, Imaging and Bioengineering, National Institutes of Health, 6707 Democracy Blvd., Bethesda, MD 20892, (301) 451–4794, *dennis.hlasta@mail.nih.gov*.

(Catalogue of Federal Domestic Assistance Program Nos. 93.866, National Institute of Biomedical Imaging and Bioengineering, National Institutes of Health, HHS)

Dated: September 3, 2020.

Miguelina Perez,

Program Analyst, Office of Federal Advisory Committee Policy.

[FR Doc. 2020–19935 Filed 9–9–20; 8:45 am]

BILLING CODE 4140–01–P

DEPARTMENT OF HEALTH AND HUMAN SERVICES

National Institutes of Health

National Institute on Aging; Notice of Closed Meetings

Pursuant to section 10(d) of the Federal Advisory Committee Act, as amended, notice is hereby given of the following meetings.

The meetings will be closed to the public in accordance with the provisions set forth in sections 552b(c)(4) and 552b(c)(6), Title 5 U.S.C., as amended. The grant applications and the discussions could disclose confidential trade secrets or commercial property such as patentable material, and personal information concerning individuals associated with the grant applications, the disclosure of which would constitute a clearly unwarranted invasion of personal privacy.

Name of Committee: National Institute on Aging Special Emphasis Panel; Frailty and Sarcopenia Pathogenesis.

Date: November 5, 2020.

Time: 12:30 p.m. to 4:30 p.m.

Agenda: To review and evaluate grant applications.

Place: National Institute on Aging, Gateway Building, 7201 Wisconsin Avenue, Bethesda, MD 20892 (Video Meeting).

Contact Person: Joshua Jin-Hyouk Park, Ph.D., Scientific Review Officer, Scientific Review Branch, National Institute on Aging, National Institutes of Health, Gateway Building, 2W200, 7201 Wisconsin Avenue, Bethesda, MD 20892, (301) 496–6208, *joshua.park4@nih.gov*.

Name of Committee: National Institute on Aging Special Emphasis Panel; Glial Cell Plasticity.

Date: November 18, 2020.

Time: 2:15 p.m. to 5:45 p.m.

Agenda: To review and evaluate grant applications.

Place: National Institute on Aging, Gateway Building, 7201 Wisconsin Avenue, Bethesda, MD 20892 (Video Meeting).

Contact Person: Dario Dieguez, Jr, Ph.D., Scientific Review Officer, Scientific Review Branch, National Institute on Aging, National Institutes of Health, Gateway Building, Suite 2W200, 7201 Wisconsin Avenue, Bethesda, MD 20892, (301) 827–3101, *dario.dieguez@nih.gov*.

(Catalogue of Federal Domestic Assistance Program Nos. 93.866, Aging Research, National Institutes of Health, HHS)

Dated: September 3, 2020.

Miguelina Perez,

Program Analyst, Office of Federal Advisory Committee Policy.

[FR Doc. 2020–19932 Filed 9–9–20; 8:45 am]

BILLING CODE 4140–01–P

DEPARTMENT OF THE INTERIOR

Fish and Wildlife Service

[FWS–R2–ES–2019–N174; FXES11140200000F2–201–FF02ENEH00]

Draft Environmental Assessment and Habitat Conservation Plan for the Endangered American Burying Beetle; City of Oklahoma City's Second Atoka Pipeline Project, in Six Oklahoma Counties

AGENCY: Fish and Wildlife Service, Interior.

ACTION: Notice of availability; request for public comments.

SUMMARY: We, the U.S. Fish and Wildlife Service (Service), announce via a **Federal Register** notice the availability of a draft environmental assessment (dEA) under the National Environmental Policy Act, and habitat conservation plan (HCP) for construction of a public water supply pipeline, the Second Atoka Pipeline Project, in six Oklahoma counties. Under the Endangered Species Act, the City of Oklahoma City and the Oklahoma City Water Utilities Trust (applicants) applied for an incidental take permit (ITP) to cover incidental take of the American burying beetle (ABB) from activities associated with construction of the pipeline project. The applicants have proposed an HCP that would be implemented to address project impacts on the ABB. The dEA evaluates the impacts of, and alternatives to, implementation of the proposed HCP. We seek public comment on the dEA and the requested Service approval of the HCP and ITP.

DATES: To ensure consideration, written comments must be received or postmarked by October 13, 2020. Any comments we receive after the closing date may not be considered in final decisions on the Service's action.

ADDRESSES: *Accessing Documents:*

Internet: DEA and HCP: You may obtain electronic copies of these documents from the Service's website at *https://www.fws.gov/southwest/es/oklahoma/*

U.S. Mail: You may obtain the documents at the following addresses.

In your request for documents, please reference the Oklahoma City draft EA/HCP.

DEA and HCP: A limited number of CD–ROM and printed copies of the dEA and HCP are available, by request, from Ms. Jonna Polk, Field Supervisor, Oklahoma Ecological Services Field Office, U.S. Fish and Wildlife Service, 9014 E. 21st St., Tulsa, OK 74129; telephone 918–581–7458; facsimile 918–581–7467.

ITP application: The ITP application is available by mail from the Regional Director, U.S. Fish and Wildlife Service, P. O. Box 1306, Room 6034, Albuquerque, NM 87103.

Submitting Comments: Regarding any of the documents available for review, you may submit written comments by one of the following methods. In your comments, please reference the Oklahoma City draft EA/HCP.

Email: OKES_NEPA@fws.gov.

Facsimile: 918–581–7467, Attn: Oklahoma City HCP EA.

U.S. Mail: Field Supervisor, Oklahoma Ecological Services Field Office, U.S. Fish and Wildlife Service, 9014 E. 21st St., Tulsa, OK 74129.

FOR FURTHER INFORMATION CONTACT: Jonna Polk, Field Supervisor, by U.S. mail at the Oklahoma Ecological Services Field Office (address above), or by phone at 918–581–7458. If you use a telecommunications device for the deaf (TDD), please call the Federal Relay Service at 800–877–8339.

SUPPLEMENTARY INFORMATION: The City of Oklahoma City and the Oklahoma City Water Utilities Trust (applicants) have applied to the U.S. Fish and Wildlife Service (Service) for an incidental take permit (ITP) under section 10(a)(1)(B) of the Endangered Species Act of 1973, as amended (ESA; 16 U.S.C. 1531 *et seq.*). The requested ITP, which would be in effect for a period of 8 years, if granted, would authorize incidental take of the federally endangered American burying beetle (ABB; *Nicrophorus americanus*) during otherwise lawful activities associated with construction of a public water supply pipeline, the Second Atoka Pipeline Project. The project extends in a largely straight course from Atoka Lake to Lake Stanley Draper and passes through Atoka, Cleveland, Coal, Pontotoc, Pottawatomie, and Seminole Counties, Oklahoma. The entire project is approximately 100 miles in length, of which 78.4 miles would occur within the known range of the ABB. Activities potentially causing take include site preparation; construction of the pipeline, pump stations, and other ancillary facilities; use of temporary work areas; construction of pipe stockpile sites and contractor yards; construction and maintenance of access roads; removal of surge facilities; post-construction restoration activities; and hydrostatic testing of the installed pipeline. The applicants have proposed a habitat conservation plan (HCP) that would be implemented to address project impacts to the ABB.

We are notifying the public of the applicant's proposal of an HCP and request to the Service for an ITP to cover incidental take of the ABB associated with construction of the Second Atoka Pipeline Project. In addition, we are notifying the public of the Service's preparation of a draft environmental assessment (EA) regarding impacts of the requested action or feasible alternatives, of an opportunity for public comment on our action, and of our intention to finalize the EA after consideration of public comment.

Public Availability of Comments

Written comments we receive become part of the public record associated with this action. Before including your address, phone number, email address, or other personal identifying information in your comment, you should be aware that the entire comment—including your personal identifying information—may be made publicly available at any time. While you can ask us in your comment to withhold your personal identifying information from public review, we cannot guarantee that we will be able to do so.

Comments and materials we receive, as well as supporting documentation used in preparing the EA, will be available for public inspection, by appointment, during normal business hours at the Service's Oklahoma Ecological Services Field Office in Tulsa, Oklahoma (see **ADDRESSES** section).

Authority

We publish this notice in compliance with the National Environmental Policy Act of 1969, as amended (NEPA; 42 U.S.C. 4321 *et seq.*), and its implementing regulations (40 CFR parts 1500–1508), and section 10(c) of the Endangered Species Act of 1973, as amended (ESA; 16 U.S.C. 1531 *et seq.*) and its implementing regulations (50 CFR 17.22 and 17.32).

Amy Lueders,

Regional Director, Southwest Region, Albuquerque, New Mexico.

[FR Doc. 2020–19934 Filed 9–9–20; 8:45 am]

BILLING CODE 4333–15–P

DEPARTMENT OF THE INTERIOR

Fish and Wildlife Service

[FWS–R8–ES–2020–N021; FXES11140800000–201–FF08EVEN00]

Categorical Exclusion and Draft City of Santa Cruz Operations and Maintenance Habitat Conservation Plan; Santa Cruz County, California

AGENCY: Fish and Wildlife Service, Interior.

ACTION: Notice of availability; request for comments.

SUMMARY: We, the U.S. Fish and Wildlife Service, have received an application for a permit to conduct activities with the potential for take of endangered species that is incidental to, and not the purpose of, carrying out an otherwise lawful activities. With some exceptions, the Endangered Species Act prohibits certain activities that may impact endangered species unless a Federal permit allows such activity. We invite comments on this application which we will take into consideration before issuing a permit.

DATES: We will receive public comments on the draft habitat conservation plan and draft categorical exclusion screening form until October 13, 2020.

ADDRESSES: *Obtaining Documents:* You may download a copy of the draft habitat conservation plan and draft categorical exclusion screening form at *http://www.fws.gov/ventura/* or you may request copies of the documents by U.S. mail (below) or by phone (see **FOR FURTHER INFORMATION CONTACT**).

Submitting Written Comments: Please send your written comments using one of the following methods:

- *U.S. mail:* Stephen P. Henry, Field Supervisor, Ventura Fish and Wildlife Office, U.S. Fish and Wildlife Service, 2493 Portola Road, Suite B, Ventura, CA 93003.
- *Email: chad_mitcham@fws.gov.*

FOR FURTHER INFORMATION CONTACT: Chad Mitcham, Biologist, by phone at 805–677–3328, via the Federal Relay Service at 1–800–877–8339 for TTY assistance, or at the Ventura address (see **ADDRESSES**).

SUPPLEMENTARY INFORMATION: The City of Santa Cruz (applicant) has applied to the U.S. Fish and Wildlife Service (Service) for an incidental take permit (ITP) under section 10(a)(1)(B) of the Endangered Species Act of 1973, as amended (ESA; 16 U.S.C. 1531 *et seq.*). The applicant is requesting an ITP with a 30-year term, for incidental take of six wildlife species likely to result from

implementation of activities covered by the applicant's habitat conservation plan (HCP). The species included in the HCP are indicated in the table below.

Pursuant to the National Environmental Policy Act of 1969, as amended (NEPA; 42 U.S.C. 4321 *et seq.*), we advise the public of the availability of the proposed HCP and our draft categorical exclusion screening form.

Common name	Scientific name	Federal status *	State status **
Invertebrates (2)			
Ohlone tiger beetle.	*Cicindela ohlone.*	E.	
Mount Hermon June beetle.	*Polyphylla barbata.*	E.	
Fish (2)			
Tidewater goby.	*Eucyclogobius newberryi.*	E.	
Pacific lamprey.	*Lampetra tridentata.*	.....	SCC
Amphibians (4)			
California red-legged frog.	*Rana draytonii*	T	SSC
Reptiles (1)			
Western pond turtle.	*Actinemys marmorata.*	.....	SSC
Plants (4)			
Ben Lomond spineflower.	*Chorizanthe pungens* var. *hartwegiana.*	E.	
Robust spineflower.	*Chorizanthe robusta* var. *robusta.*	E	.....
Santa Cruz tarplant.	*Holocarpha macradenia.*	T	E
San Francisco popcornflower.	*Plagiobothrys diffusus.*	.....	E

* Federal Status: Candidate (C); Endangered (E); Threatened (T).
** State Status: Species of Special Concern (SSC); Threatened (T); Endangered (E).

Background

Section 9 of the ESA prohibits take of fish and wildlife species listed as endangered (16 U.S.C. 1538). Under section 10(a)(1)(B) of the ESA (16 U.S.C. 1539(a)(1)(B)), we may issue permits to authorize take of listed fish and wildlife species that is incidental to, and not the purpose of, carrying out an otherwise lawful activity. Regulations governing permits for endangered species are set forth in title 50 of the Code of Federal Regulations (CFR) at part 17, section 17.22.

The NEPA (42 U.S.C. 4321 *et seq.*) requires Federal agencies to analyze their proposed actions to determine whether the actions may significantly affect the human environment. In these NEPA analyses, the Federal agency will identify direct, indirect, and cumulative effects, as well as possible mitigation for effects on environmental resources that could occur with implementation of the proposed action and alternatives.

Public Review

If you wish to comment on the draft HCP and categorical exclusion screening form, you may submit comments by one of the methods in **ADDRESSES**.

Any comments we receive will become part of the decision record associated with this action. Before including your address, phone number, email address, or other personal identifying information in your comment, please be aware that your entire comment—including your personal identifying information—may be made publicly available at any time. While you can request in your comment that we withhold your personal identifying information from public review, we cannot guarantee that we will be able to do so.

Authority

We provide this notice under section 10 of the ESA (16 U.S.C. 1531 *et seq.*) and NEPA regulations (40 CFR 1506.6).

Stephen Henry,

Field Supervisor, Ventura Fish and Wildlife Office, Ventura, California.

[FR Doc. 2020–19938 Filed 9–9–20; 8:45 am]

BILLING CODE 4333–15–P

DEPARTMENT OF THE INTERIOR

Bureau of Land Management

[LLMTC02200–L14400000–FR0000–20 MO# 4500144853; MTM–110962]

Notice of Realty Action: Recreation and Public Purposes Act Classification and Segregation for Intake Campground, Dawson County, MT

AGENCY: Bureau of Land Management, Interior.

ACTION: Notice of realty action.

SUMMARY: The Bureau of Land Management (BLM) has examined certain public lands in Dawson County, Montana, and has found them suitable for classification for conveyance to Montana Department of Fish, Wildlife and Parks (MT FWP) under the provisions of the Recreation and Public Purposes (R&PP) Act, as amended, and Section 7 of the Taylor Grazing Act dated June 8, 1934. The lands consist of 6.41 acres. MT FWP proposes to continue to manage the land for public use and access as the Intake Campground and Fishing Access Site.

DATES: Submit written comments regarding this classification on or before October 26, 2020. Comments may be mailed, or hand delivered to the BLM office address below. Comments may be submitted electronically at the link below. The BLM will not consider comments received by telephone or email.

ADDRESSES: Mail written comments to Bureau of Land Management, Miles City Field Office, Jacalynn Parks, 111 Garryowen Road, Miles City, MT 59301. Submit comments electronically via website *https://go.usa.gov/xd6VB.* Copies of the Environmental Assessment are available at the BLM Miles City Field Office (MCFO) at this same address and website.

FOR FURTHER INFORMATION CONTACT: Jacalynn Parks, Realty Specialist, telephone: 406–233–2800, email: *jcparks@blm.gov.* Persons who use a telecommunications device for the deaf may call the Federal Relay Service (FRS) at 1–800–877–8339 to leave a message or question for Ms. Parks. The FRS is available 24 hours a day, 7 days a week. You will receive a reply during normal business hours.

SUPPLEMENTARY INFORMATION: MT FWP has not applied for more than the 6,400-acre limitation for recreation uses in a year, nor for more than 640 acres for each of the programs involving public resources other than recreation. MT FWP has submitted a statement in compliance with the applicable regulations. In 2001, the BLM conducted a dependent resurvey to determine accretion and avulsion of land along the Yellowstone River, and identified the lands under consideration to be in inadvertent trespass by the MT FWP's Intake Campground located along the Yellowstone River. In August 2018, MT FWP applied to the BLM MCFO for an R&PP patent for the 6.41 acres. An official survey was executed in 2018 to create lot boundaries and legal land descriptions for the proposed R&PP patent. Intake is a very popular public fishing and recreation site for the State and provides public use amenities, including a boat ramp for river access. The lands under consideration are not needed for any other Federal purposes and would be best served to continue to be available for public access and fishing facilities as managed by MT FWP. Conveyance of the surface estate would allow MT FWP to continue the operation and maintenance of the existing campground and facilities for the public. The lands examined and identified as suitable for conveyance under the R&PP Act are legally described as:

Principal Meridian, Montana

T. 18 N., R. 56 E.,
Sec. 25, lot 6;
Sec. 36, lot 9.

The area described contains 6.41 acres.

The BLM examined these lands through an environmental analysis and found the land suitable for classification and conveyance to MT FWP and signed a Finding of No Significant Impact. Conveyance of the lands for recreational or public purposes use is in conformance with the 2015 BLM MCFO Resource Management Plan, as amended, and in the public interest.

All interested parties will receive a copy of this Notice once it is published in the **Federal Register**. A copy of the **Federal Register** Notice will be published in the newspaper of local circulation once a week for 3 consecutive weeks. The regulations at 43 CFR 2741 addressing requirements and procedures for conveyances under the R&PP Act do not require a public meeting.

Upon publication of this Notice in the **Federal Register**, the lands will be segregated from all other forms of appropriation under the public land laws, including locations under the mining laws, except for lease or conveyance under the R&PP Act and leasing under the mineral leasing laws. The segregative effect shall terminate upon issuance of a patent, upon final rejection of the application, or 18 months from the date of this notice, whichever occurs first.

The conveyance of the land will be subject to the following terms, conditions, and reservations:

1. A right-of-way thereon for ditches and canals constructed by the authority of the United States pursuant to the Act of August 30, 1890 (43 U.S.C. 945).
2. Provisions of the R&PP Act and to all applicable regulations of the Secretary of the Interior.
3. All mineral deposits in the land so patented, and the right to prospect for, mine, and remove such deposits from the same under applicable law and regulations as established by the Secretary of the Interior are reserved to the United States, together with all necessary access and exit rights.
4. Conveyance of the parcel is subject to valid existing rights.
5. An appropriate indemnification clause protecting the United States from claims arising out of the patentee's use, occupancy, or occupation on the leased/patented lands.
6. Any other reservations that the authorized officer determines appropriate to ensure public access and proper management of Federal lands and interests therein.
7. A limited reversionary provision stating that title shall revert to the United States upon a finding, after notice and opportunity for a hearing, that, without the approval of the Secretary of the Interior or his delegate, the patentee or its approved successor attempts to transfer title to or control over the lands to another, the lands have been devoted to a use other than that for which the lands were conveyed, the lands have not been used for the purpose for which the lands were conveyed for a 5-year period, or the patentee has failed to follow the approved development plan or management plan. No portion of the land shall, under any circumstance, revert to the United States if any such portion has been used for solid waste disposal or for any other purpose which may result in the disposal, placement, or release of any hazardous substance.

Classification Comments: Interested persons may submit comments involving the suitability of the land for use as a campground, while maintaining, preserving, and improving the campground. Comments on the classification are restricted to whether the land is physically suited for the proposal, whether the use will maximize the future use or uses of the land, whether the use is consistent with local planning and zoning, or if the use is consistent with State and Federal programs.

Application Comments: Interested persons may submit comments regarding the specific use proposed in the application and plan of development and management, whether the BLM followed proper administrative procedures in reaching the decision, or any other factor not directly relating to the suitability of the lands for the use as a campground, while maintaining, preserving, and improving the campground.

Any adverse comments will be reviewed by the BLM Montana/Dakotas State Director or other authorized official of the Department of the Interior, who may sustain, vacate, or modify this realty action. In the absence of any adverse comments, the classification will become effective on November 9, 2020. The lands will not be offered for conveyance until after the classification becomes effective.

Before including your address, phone number, email address, or other personal identifying information in any comment, be aware that your entire comment, including your personal identifying information, may be made publicly available at any time. While you can ask us in your comment to withhold your personal identifying information from public review, we cannot guarantee that we will be able to do so.

Authority: 43 CFR 2741.5.

Eric D. Lepisto,

Field Manager, Miles City Field Office.

[FR Doc. 2020–20007 Filed 9–9–20; 8:45 am]

BILLING CODE 4310–DN–P

DEPARTMENT OF THE INTERIOR

Bureau of Ocean Energy Management

[Docket No. BOEM–2020–0018]

Outer Continental Shelf, Alaska Region, Cook Inlet, Proposed Oil and Gas Lease Sale 258

AGENCY: Bureau of Ocean Energy Management, Interior.

ACTION: Call for information and nominations.

SUMMARY: The Bureau of Ocean Energy Management (BOEM) is issuing this Call for Information and Nominations (Call) for proposed Lease Sale 258 in the Cook Inlet Planning Area in 2021, as included in the current 2017–2022 Outer Continental Shelf (OCS) Oil and Gas Leasing Program (2017–2022 Program) that BOEM published on November 18, 2016. The purpose of this Call is to solicit industry nominations for areas of leasing interest, including nominations or indications of interest in specific blocks within the Call Area. BOEM will also use the Call to gather comments and information for consideration in planning for this proposed OCS oil and gas lease sale. Given the long lead time needed to prepare for a lease sale, BOEM is beginning the planning process for this potential sale at this time. However, this Call is not a decision to hold a lease sale in the Cook Inlet Planning Area, but to evaluate the area described herein for potential oil and gas leasing.

DATES: All nominations and comments submitted in response to this Call must be received by BOEM no later than October 13, 2020. BOEM will consider submissions sent by mail so long as they are postmarked by the last day of the comment period.

ADDRESSES: *Public Comment Submission Procedures:* All public comments should be submitted through one of the following methods:

1. Federal eRulemaking Portal: http://www.regulations.gov. In the field entitled, ''Search,'' enter ''BOEM–2020–0018'' and then click ''Search.'' Follow the instructions to submit public comments and view supporting and related materials available for this notice;

2. U.S. Postal Service or other delivery service to the following address: Chief, Leasing Section, BOEM, Alaska Region, 3801 Centerpoint Drive, Suite 500, Anchorage, Alaska 99503–5823. Send your comments in an envelope clearly labelled, ''Comments on the Call for Information and Nominations for Proposed Lease Sale 258 in the Cook Inlet Planning Area.''

Nominations/Indications of Industry Interest Submission Procedures: To ensure security and confidentiality of proprietary information to the maximum extent possible, please send nominations/indications of interest and other proprietary information to Chief, Leasing Section, BOEM, Alaska Region, 3801 Centerpoint Drive, Suite 500, Anchorage, Alaska 99503–5823. Send your nominations in an envelope clearly labeled, ''Nominations for Proposed Lease Sale 258 in the Cook Inlet Planning Area.''

FOR FURTHER INFORMATION CONTACT: Patricia LaFramboise, Regional Supervisor, Leasing and Plans, Bureau of Ocean Energy Management, Alaska Region, 3801 Centerpoint Drive, Suite 500, Anchorage, AK 99503–5823, telephone (907) 334–5200.

SUPPLEMENTARY INFORMATION:

2017–2022 OCS Oil and Gas Leasing Program: The Secretary of the Interior signed the ''Record of Decision (ROD) and Approval of the 2017–2022 OCS Oil and Gas Leasing Program'' on January 17, 2017, and the 2017–2022 Program became effective on July 1, 2017. Information on the development of the 2017–2022 Program, PEIS, and ROD is available on BOEM's website at: *http://www.boem.gov/Five-Year-Program-2017-2022/.*

During development of the 2017–2022 Program, BOEM analyzed three options for the Cook Inlet Program Area: (1) Targeted Leasing, (2) Beluga Whale Critical Habitat Exclusion, and (3) the No Sale Option. In the ROD, the Secretary chose the Targeted Leasing Option for the proposed Cook Inlet Lease Sale 258. Under the Targeted Leasing process, BOEM uses scientific information and stakeholder feedback to determine which specific areas offer the greatest resource potential, while minimizing potential conflicts with environmental values, subsistence uses, and other uses.

Environmental Review Process: BOEM intends to prepare an Environmental Impact Statement (EIS), in accordance with the National Environmental Policy Act (NEPA), covering the proposed lease sale described in this Call. BOEM is publishing, concurrently with this Call, a NOI to prepare an EIS. The lease sale EIS will evaluate the potential effects of leasing on the human, marine, and coastal environments, and through this process BOEM may develop measures and lease stipulations to mitigate adverse impacts for the options being analyzed. Several consultations will be conducted concurrently with the NEPA process. These consultations include, but are not limited to, those required by the Endangered Species Act, the Magnuson-Stevens Fishery Conservation and Management Act, Section 106 of the National Historic Preservation Act, and Executive Order 13175—''Consultation and Coordination with Tribal Governments.'' These consultations will assist BOEM in its leasing decisions.

BOEM's Leasing Process: BOEM's regulations for planning and holding an oil and gas lease sale are found at 30 CFR 556.300–309.

(1) Call for Information and Nominations: See section below.

(2) Area Identification: Based on the information and nominations submitted in response to this Call, BOEM will develop a recommendation of the area proposed for further leasing consideration and environmental analysis. Upon approval by the Secretary, BOEM will announce the proposed area identified for leasing in the **Federal Register**, in accordance with 30 CFR 556.302(a)(3).

(3) Proposed Notice of Sale (NOS): If BOEM proceeds with consideration of leasing after completion of Area Identification and environmental analysis, it will publish a Notice of Availability of a Proposed NOS in the **Federal Register** and send the Proposed NOS to the Governor of Alaska for comment and recommendations on the size, timing, and location of the proposed sale. The Proposed NOS describes the size, timing, and location of the proposed sale, and provides additional information on the area(s) proposed for leasing, proposed lease terms and conditions of the sale, and proposed stipulations to mitigate potential adverse impacts on the environment.

(4) Final Notice of Sale (NOS): If BOEM decides to proceed with leasing, it will publish a Final NOS in the **Federal Register** at least 30 days before the date of the lease sale. The Final NOS describes the place, time, and method for filing bids and the place, date, and hour for opening and publicly announcing bids. It also contains a description of the area(s) offered for lease, the lease terms and conditions of the sale, and stipulations to mitigate potential adverse impacts on the environment.

Call for Information and Nominations

1. Authority

This Call is published pursuant to the Outer Continental Shelf Lands Act (OCSLA), as amended (43 U.S.C. 1331–1356), and the implementing regulation at 30 CFR 556.301.

2. Purpose of the Call

The purpose of this Call is to solicit industry nominations for areas of leasing interest and to gather comments and information from the public on the area(s) being considered for the proposed OCS oil and gas lease sale in the Cook Inlet Planning Area in 2021. Pursuant to 30 CFR 556.301, BOEM seeks comments from industry and the public on:

(a) Industry interest in the area proposed for leasing, including nominations or indications of interest in specific blocks within the area;

(b) geological conditions, including bottom hazards;

(c) archaeological sites on the seabed or near shore;

(d) potential multiple uses of the proposed leasing area, including subsistence and navigation;

(e) areas that should receive special concern and analysis; and

(f) other socioeconomic, biological, and environmental information.

Information submitted in response to this Call will be used to:

- Inform the Area Identification process under 30 CFR 556.302;
- Prioritize areas with potential for oil and gas development;
- Develop potential lease terms and conditions;
- Identify potential use conflicts and potential mitigation measures; and
- Assist in BOEM's planning and environmental review process.

3. Description of the Call Area

The 2017–2022 Program includes one proposed lease sale in the northern portion of the Cook Inlet Planning Area. This area identified for potential leasing represents approximately 20% of the total Cook Inlet Planning Area. It is located offshore the State of Alaska, extending from the 3-nautical mile (5.6 kilometers) seaward limit of State of Alaska submerged lands, roughly from Kalgin Island in the north to Augustine Island in the south. The Call Area consists of 224 OCS blocks covering about 1.09 million acres (442,875 hectares).

A map depicting the Call Area is available for download on the BOEM website at: *http://www.boem.gov/ak258.* Copies of Official Protraction Diagrams (OPDs) also are available for download on the BOEM website at: *https://www.boem.gov/Maps-and-GIS-Data/.*

4. Instructions on the Call

BOEM requests that parties interested in leasing indicate their interest in, and comment on, the acreage within the boundaries of the Call Area that they wish to have included in the proposed lease sale. Respondents should explicitly outline the areas of interest along block lines and rank the areas or specific blocks in which they are interested, according to their priority, using the following indicators: 1 [high], 2 [medium], or 3 [low]. Respondents are encouraged to be as specific as possible in prioritizing blocks and supporting nominations of specific blocks with detailed information, such as relevant geologic, geophysical, and economic data. Areas where interest has been indicated, but on which respondents have not indicated priorities, will be considered low priority. Respondents may also submit a list of blocks nominated by OPD and Leasing Map designations to ensure correct interpretation of their nominations. OPDs and Leasing Maps are available on BOEM's website at *https://www.boem.gov/Maps-and-GIS-Data/.*

BOEM also seeks comments from all interested parties about particular geological, environmental, biological, archaeological and socioeconomic conditions, use conflicts, or other information about conditions that could affect the potential leasing and development of particular areas. Comments may refer to broad areas or may refer to particular OCS blocks.

5. Protection of Privileged or Proprietary Information

BOEM will protect privileged or proprietary information, which industry submits, in accordance with the Freedom of Information Act (FOIA) and OCSLA requirements. To avoid inadvertent release of such information, all documents and every page containing such information should be marked with ''Confidential—Contains Proprietary Information.'' To the extent a document contains a mix of proprietary and nonproprietary information, the document should be clearly marked to indicate which portion of the document is proprietary and which is not. Exemption 4 of FOIA applies to trade secrets and commercial or financial information that you submit that is privileged or confidential. The OCSLA states that the ''Secretary shall maintain the confidentiality of all privileged or proprietary data or information for such period of time as is provided for in this [Act], established by regulation, or agreed to by the parties'' (43 U.S.C. 1344(g)). BOEM considers nominations of specific blocks to be proprietary, and therefore BOEM will not release information that identifies any particular nomination with any particular party, so as not to compromise the competitive position of any participants in the process of indicating interest.

However, please be aware that BOEM's practice is to make all comments, including the names and addresses of individuals, available for public inspection. Before including your address, phone number, email address, or other personal identifying information in your comment, please be advised that your entire comment, including your personal identifying information, may be made publicly available at any time. In order for BOEM to withhold from disclosure your personal identifying information, you must identify any information contained in the submission of your comments that, if released, would constitute a clearly unwarranted invasion of your personal privacy. You must also briefly describe any possible harmful consequence(s) of the disclosure of information, such as embarrassment, injury or other harm. While you can ask us in your comment to withhold from public review your personal identifying

information, we cannot guarantee that we will be able to do so. BOEM will make available for public inspection, all comments submitted, with the exceptions just noted, by organizations and businesses, or by individuals identifying themselves as representatives of organizations or businesses.

Walter D. Cruickshank,

Acting Director, Bureau of Ocean Energy Management.

[FR Doc. 2020–20032 Filed 9–9–20; 8:45 am]

BILLING CODE 4310–MR–P

DEPARTMENT OF THE INTERIOR

Bureau of Ocean Energy Management

[Docket No. BOEM–2020–0018]

Outer Continental Shelf (OCS), Alaska Region (AK), Cook Inlet Planning Area, Proposed Oil and Gas Lease Sale 258

AGENCY: Bureau of Ocean Energy Management, Interior.

ACTION: Notice of intent to prepare an Environmental Impact Statement and provide public scoping opportunities.

SUMMARY: Consistent with the regulations implementing the National Environmental Policy Act (NEPA), the Bureau of Ocean Energy Management (BOEM) is announcing its intent to prepare an Environmental Impact Statement (EIS) for the proposed 2021 Cook Inlet Lease Sale 258 in the Cook Inlet Planning Area. The EIS will focus on the potential effects of leasing, exploration, development, and production of oil and natural gas in the proposed lease sale area. In addition to the no action alternative (*i.e.,* not holding the lease sale), other alternatives will be considered.

DATES: All interested parties, including Federal, State, Tribal, and local governments, and the general public, may submit written comments by October 13, 2020 on the scope of the Lease Sale 258 EIS, significant issues, reasonable alternatives, and potential mitigation measures.

Comments may be made online at *https://www.regulations.gov/.* Search for Docket BOEM–2020–0018, or ''Oil and Gas Lease Sales: Alaska Outer Continental Shelf; Lease Sale 258,'' and click on the ''Comment Now!'' button. Enter your information and comment, and then click ''Submit.'' Before including your address, phone number, email address, or other personally identifying information in your comment, you should be aware that your entire comment—including your personally identifying information—may be made publicly available at any time. While you can ask us in your comment to withhold your personally identifying information from public review, we cannot guarantee that we will be able to do so. Pursuant to the regulations implementing the procedural provisions of NEPA, BOEM will provide the public the opportunity to provide comments on the scope of the Lease Sale 258 EIS. To protect the health of local communities and minimize in-person contact during the Covid-19 pandemic, public scoping will be conducted online. To participate in the scoping process, interested parties can visit BOEM's virtual ''meeting room'' at *https://www.boem.gov/ak258-scoping* any time through October 13, 2020. This ''meeting room'' page will include:

- An overview of the lease sale.
- Links to pages with more information on the NEPA process, the BOEM National Program, and the natural and human environment in Cook Inlet.
- A field for readers to submit questions to BOEM electronically. Responses to questions will be posted on *www.boem.gov/ak258-scoping.*
- Directions for providing written comments on *https://www.regulations.gov.*

In addition, BOEM will hold two live virtual meetings during the 30-day scoping period. Details of these meetings will be posted on *www.boem.gov/ak258-scoping* with the publication of this Notice.

FOR FURTHER INFORMATION CONTACT: For information on the Lease Sale 258 EIS, the submission of comments, or BOEM's policies associated with this notice, please contact Amee Howard, Project Manager, BOEM Office of Environment, Alaska Region, 3801 Centerpoint Drive, Suite 500, Anchorage, AK 99503, (907) 334–5200.

SUPPLEMENTARY INFORMATION: On November 28, 2016, the Secretary of the Interior (Secretary) released the 2017–2022 National OCS Oil and Gas Leasing Proposed Final Program (Proposed Final Program). The Proposed Final Program includes the proposed 2021 Cook Inlet Lease Sale. On January 17, 2017, the Secretary issued a memorandum with a decision to proceed with the OCS leasing program as described in the Proposed Final Program.

The proposed lease sale area consists of 224 lease blocks and covers approximately 442,875 hectares (or 1.09 million acres) located offshore of the State of Alaska in Federal waters in the northern portion of Cook Inlet. For more information, go to: *https://www.boem.gov/ak258.*

This Notice of Intent is not an announcement to hold a lease sale but is a continuation of the information gathering process and is published early in the environmental review process in furtherance of the goals of NEPA. The comments received during scoping will help inform the content of the Lease Sale 258 EIS. If, after completion of the EIS, the Department of the Interior's Assistant Secretary for Land and Minerals Management chooses to hold the proposed lease sale, that decision and the details related to the proposed lease sale (including the lease sale area and any mitigation) will be announced in a Record of Decision and Final Notice of Sale.

Scoping Process: This Notice of Intent also serves to announce the scoping process for identifying key issues to be addressed in the Lease Sale 258 EIS. Throughout the scoping process, Federal, State, Tribal and local governments, and the general public have the opportunity to provide input to BOEM in determining significant resources, issues, impacts, reasonable alternatives, and potential mitigation measures to be analyzed in the EIS. BOEM has developed and seeks public input on the following draft alternatives:

- Beluga Whale Mitigation Alternative. This alternative is proposed to minimize potential impacts to the ESA-listed, Cook Inlet Distinct Population Segment (DPS) beluga whale.
- Northern Sea Otter Mitigation Alternative. This alternative is proposed to minimize potential impacts to ESA-listed, Southwest Alaska DPS of the northern sea otter.
- Gillnet Fishery Mitigation Alternative. This alternative is proposed to reduce the potential for conflicts with the Cook Inlet drift gillnet fishery.

Maps and more details on each of these draft alternatives can be found at: *https://www.boem.gov/ak258.*

These draft alternatives are based on and in response to stakeholder comments made during the development of the 2017–2022 Draft Proposed Program, the 2017–2022 Proposed Program and Draft Programmatic EIS and the Cook Inlet Lease Sale 244 (held in 2017) NEPA process. BOEM is proceeding in a manner that allows for maximum flexibility in use of the components of these preliminary alternatives in future decision making.

BOEM will consider additional alternatives, exclusions, and/or mitigation suggestions identified during

the scoping process and the comment period initiated by this notice of intent in the preparation of the EIS.

BOEM will use the NEPA commenting process to satisfy the public comment requirements of the National Historic Preservation Act (54 U.S.C. 306108), as provided for in 36 CFR 800.2(d)(3).

Cooperating Agencies: BOEM invites qualified government entities such as other Federal agencies, State, Tribal, and local governments, to consider becoming cooperating agencies for the preparation of the Cook Inlet Lease Sale 258 EIS. Following the guidelines at 40 CFR 1501.6 and 1508.5 from the Council on Environmental Quality (CEQ), qualified agencies and governments are those with ''jurisdiction by law or special expertise.'' Potential cooperating agencies should consider their authority and capacity to assume the responsibilities of a cooperating agency and remember that an agency's role in the environmental analysis neither enlarges nor diminishes the final decision-making authority of any other agency involved in the NEPA process. Upon request, BOEM will provide potential cooperating agencies with a written summary of guidelines for cooperating agencies, including time schedules and critical action dates, milestones, responsibilities, and scope and detail of cooperating agencies' contributions. BOEM anticipates this summary will form the basis for a Memorandum of Understanding between BOEM and any cooperating agency. BOEM, as the lead agency, will not provide financial assistance to cooperating agencies. In addition to becoming a cooperating agency, other opportunities will exist to provide information and comments to BOEM during the public comment period for the Cook Inlet Lease Sale 258 EIS. For additional information about cooperating agencies, please contact Amee Howard, Project Manager, BOEM Office of Environment (907–334–5200).

Authority: This notice of intent is published pursuant to the regulations at 40 CFR 1501.7 implementing the provisions of NEPA.

Walter D. Cruickshank,

Acting Director, Bureau of Ocean Energy Management.

[FR Doc. 2020–20029 Filed 9–9–20; 8:45 am]

BILLING CODE 4310–MR–P

INTERNATIONAL TRADE COMMISSION

[Investigation Nos. 731–TA–1455 and 731–TA–1457 (Final)]

Polyethylene Terephthalate (PET) Sheet From Korea and Oman

Determinations

On the basis of the record [1] developed in the subject investigations, the United States International Trade Commission (''Commission'') determines, pursuant to the Tariff Act of 1930 (''the Act''), that an industry in the United States is materially injured by reason of imports of polyethylene terephthalate (PET) sheet from Korea and Oman, provided for in subheading 3920.62.00 of the Harmonized Tariff Schedule of the United States, that have been found by the U.S. Department of Commerce (''Commerce'') to be sold in the United States at less than fair value (''LTFV'').[2]

Background

The Commission instituted these investigations effective July 9, 2019, following receipt of petitions filed with the Commission and Commerce by Advanced Extrusion, Inc., Rogers, Minnesota; Ex-Tech Plastics, Inc., Richmond, Illinois; and Multi-Plastics Extrusions, Inc., Hazleton, Pennsylvania. The Commission scheduled the final phase of the investigations following notification of preliminary determinations by Commerce that imports of PET sheet from Korea and Oman were being sold at LTFV within the meaning of section 733(b) of the Act (19 U.S.C. 1673b(b)). Notice of the scheduling of the final phase of the Commission's investigations and of a public hearing to be held in connection therewith was given by posting copies of the notice in the Office of the Secretary, U.S. International Trade Commission, Washington, DC, and by publishing the notice in the **Federal Register** of March 19, 2020 (85 FR 15796). In light of the restrictions on access to the Commission building due to the COVID–19 pandemic, and in accordance with 19 U.S.C. 1677c(a)(1), the Commission conducted its hearing on July 14, 2020, by video conference as set forth in procedures provided to the parties. All persons who requested the opportunity were permitted to participate.

The Commission made these determinations pursuant to § 735(b) of the Act (19 U.S.C. 1673d(b)). It completed and filed its determinations in these investigations on September 3, 2020. The views of the Commission are contained in USITC Publication 5111 (September 2020), entitled *Polyethylene Terephthalate (PET) Sheet from Korea and Oman: Investigation Nos. 731–TA–1455 and 731–TA–1457 (Final).*

By order of the Commission.

Issued: September 3, 2020.

Lisa Barton,

Secretary to the Commission.

[FR Doc. 2020–19960 Filed 9–9–20; 8:45 am]

BILLING CODE 7020–02–P

[1] The record is defined in § 207.2(f) of the Commission's Rules of Practice and Procedure (19 CFR 207.2(f)).

[2] 85 FR 44276 and 85 FR 44278 (July 22, 2020).

NATIONAL ARCHIVES AND RECORDS ADMINISTRATION

[NARA–2020–061]

National Industrial Security Program Policy Advisory Committee (NISPPAC); Meeting

AGENCY: Information Security Oversight Office (ISOO), National Archives and Records Administration (NARA).

ACTION: Notice of Federal Advisory Committee meeting.

SUMMARY: We are announcing an upcoming meeting of the National Industrial Security Program Policy Advisory Committee (NISPPAC) in accordance with the Federal Advisory Committee Act and implementing regulations.

DATES: The meeting will be on November 18, 2020, from 10:00 a.m. to 12:00 p.m.

ADDRESSES: The November 18, 2020, meeting will be a virtual meeting. See supplementary procedures below.

FOR FURTHER INFORMATION CONTACT: Heather Harris Pagán, ISOO Program Analyst, by telephone at 202.357.5351, or by email at *ISOO@nara.gov.* Contact ISOO at *ISOO@nara.gov* and the NISPPAC at *NISPPAC@nara.gov.*

SUPPLEMENTARY INFORMATION: This virtual meeting is open to the public in accordance with the Federal Advisory Committee Act (5 U.S.C. app 2) and implementing regulations at 41 CFR 101–6. The Committee will discuss National Industrial Security Program policy matters.

Procedures: You must register in advance through the Event Services link *https://ems8.intellor.com?do=register&t=1&p=831768* if you wish to attend. NISPPAC members, ISOO employees, and speakers should send an email to *NISPPAC@nara.gov* for the appropriate registration information instead of registering with the above link. Contact

us via email at *NISPPAC@nara.gov* with any questions.

Maureen MacDonald,

Designated Committee Management Officer.

[FR Doc. 2020–20016 Filed 9–9–20; 8:45 am]

BILLING CODE 7515–01–P

NATIONAL TRANSPORTATION SAFETY BOARD

Sunshine Act Meeting

TIME AND DATE: 9:30 a.m., Tuesday, September 29, 2020.

PLACE: Virtual.

STATUS: The one item may be viewed by the public through webcast only.

MATTER TO BE CONSIDERED:

64871 Highway Accident Report: Stretch Limousine Run-Off-Road Crash Near Schoharie, New York, October 6, 2018

CONTACT PERSON FOR MORE INFORMATION: Candi Bing at (202) 590–8384 or by email at *bingc@ntsb.gov.*

Media Information Contact: Eric Weiss by email at *eric.weiss@ntsb.gov* or at (202) 314–6100.

This meeting will take place virtually. The public may view it through a live or archived webcast by accessing a link under ''Webcast of Events'' on the NTSB home page at *www.ntsb.gov.*

There may be changes to this event due to the evolving situation concerning the novel coronavirus (COVID–19). Schedule updates, including weather-related cancellations, are also available at *www.ntsb.gov.*

The National Transportation Safety Board is holding this meeting under the Government in the Sunshine Act, 5 U.S.C. 552(b).

Dated: Tuesday, September 8, 2020.

Candi R. Bing,

Federal Register Liaison Officer.

[FR Doc. 2020–20057 Filed 9–8–20; 11:15 am]

BILLING CODE 7533–01–P

NUCLEAR REGULATORY COMMISSION

[Docket Nos. 50–456; 50–457; NRC–2020–0208]

Exelon Generation Company, LLC; Braidwood Station, Units 1 and 2

AGENCY: Nuclear Regulatory Commission.

ACTION: Environmental assessment and finding of no significant impact; issuance.

SUMMARY: The U.S. Nuclear Regulatory Commission (NRC) is considering issuance of an amendment to Renewed Facility Operating License Nos. NPF–72 and NPF–77 that were issued to Exelon Generation Company, LLC, (licensee) for operation of the Braidwood Station, Units 1 and 2. The proposed amendment is contained in the licensee's letter dated July 15, 2020, as supplemented by letter dated August 14, 2020, and would change technical specifications (TS) surveillance requirement (SR) 3.7.9.2 to allow an ultimate heat sink (UHS) temperature of less than or equal to 102.8 degrees Fahrenheit (°F) until September 30, 2020. The proposed amendment would also permanently extend the completion time for the Required Action of both Braidwood Station, Units 1 and 2, to be placed in Mode 3 within 12 hours when the UHS is inoperable due to the average water temperature.

DATES: The environmental assessment and finding of no significant impact referenced in this document is available on September 10, 2020.

ADDRESSES: Please refer to Docket ID NRC–2020–0208 when contacting the NRC about the availability of information regarding this document. You may obtain publicly-available information related to this document using any of the following methods:

- *Federal Rulemaking Website:* Go to *https://www.regulations.gov* and search for Docket ID NRC–2020–0208. Address questions about Docket IDs in *Regulations.gov* to Jennifer Borges; telephone: 301–287–9127; email: *Jennifer.Borges@nrc.gov.* For technical questions, contact the individuals listed in the **FOR FURTHER INFORMATION CONTACT** section of this document.
- *NRC's Agencywide Documents Access and Management System (ADAMS):* You may obtain publicly-available documents online in the ADAMS Public Documents collection at *https://www.nrc.gov/reading-rm/adams.html.* To begin the search, select ''Begin Web-based ADAMS Search.'' For problems with ADAMS, please contact the NRC's Public Document Room (PDR) reference staff at 1–800–397–4209 or 301–415–4737, or by email to *pdr.resource@nrc.gov.* For the convenience of the reader, the ADAMS accession numbers are provided in a table in the ''Availability of Documents'' section of this document.

FOR FURTHER INFORMATION CONTACT: Briana Grange, Office of Material Safety and Safeguards, telephone: 301–415–1042; email: *Briana.Grange@nrc.gov;* or Joel Wiebe, Office of Nuclear Reactor Regulation, telephone: 301–415–6606; email: *Joel.Wiebe@nrc.gov.* Both are staff of the U.S. Nuclear Regulatory Commission, Washington, DC 20555–0001.

SUPPLEMENTARY INFORMATION:

I. Introduction

The NRC is considering issuance of amendments to Renewed Facility Operating License Nos. NPF–72 and NPF–77 that were issued to Exelon Generation Company, LLC (Exelon), for operation of the Braidwood Station, Units 1 and 2 (Braidwood), located in Will County Illinois. Exelon submitted its license amendment request in accordance with section 50.90 of title 10 of the *Code of Federal Regulation* (10 CFR), by letter dated July 15, 2020 (ADAMS Accession No. ML20197A434) as supplemented by letter dated August 14, 2020 (ADAMS Accession No. ML20227A375). If approved, the license amendments would revise TS surveillance requirement (SR) in TS 3.7.9.2 to allow a temporary increase in the allowable ultimate heat sink (UHS) average temperature of less than or equal to (≤) 102.8 degrees Fahrenheit (°F) (39.3 degrees Celsius (°C)) through September 30, 2020. The amendments would also permanently extend the completion time for TS 3.7.9 Required Action A.1, which requires Exelon to place Braidwood in hot standby (Mode 3), from 6 hours to 12 hours when the UHS is inoperable due to the average water temperature. The completion time for placing Braidwood in hot standby for all other reasons would remain 6 hours.

Therefore, as required by 10 CFR 51.21, the NRC performed an environmental assessment (EA). Based on the results of the EA assessment that follows, the NRC has determined not to prepare an environmental impact statement for the proposed amendments, and is issuing a finding of no significant impact (FONSI).

II. Environmental Assessment

Plant Site and Environs

Braidwood is located in Will County, Illinois approximately 50 miles (mi; 80 kilometers [km]) southwest of the Chicago Metropolitan Area and 20 mi (32 km) south-southwest of Joliet. The Kankakee River is approximately 5 mi (8 km) east of the eastern site boundary. An onsite 2,540-acre (ac; 1,030-hectare [ha]) cooling pond provides condenser cooling. Cooling water is withdrawn from the pond through the lake screen house, which is located at the north end of the pond. Heated water returns to the cooling pond through a discharge canal west of the lake screen house intake that is separated from the intake by a dike. The pond typically holds 22,300 acre-

feet (27.5 million cubic meters) of water at any given time. The cooling pond includes both ''essential'' and ''non-essential'' areas. The essential cooling pond is the portion of the cooling pond that serves as the UHS for emergency core cooling, and it consists of a 99-ac (40-ha) excavated area of the pond directly in front of the lake screen house. The essential cooling pond's principal functions are to dissipate residual heat after reactor shutdown and to dissipate heat after an accident. It is capable of supplying Braidwood's cooling system with water for 30 days of station operation without additional makeup water. For clarity, use of the term ''UHS'' in this EA refers to the 99-ac (40-ha) essential cooling pond, and use of the term ''cooling pond'' or ''pond'' describes the entire 2,540-ac (1,030-ha) area, which includes both the essential and non-essential areas.

The cooling pond is part of the Mazonia-Braidwood State Fish and Wildlife Area, which encompasses the majority of the non-UHS area of the cooling pond as well as Illinois Department of Natural Resources (IDNR)-owned lands adjacent to the Braidwood site to the south and southwest of the cooling pond. Exelon and the IDNR have jointly managed the cooling pond as part of the Mazonia-Braidwood State Fish and Wildlife Area since 1991 pursuant to a long-term lease agreement. Under the terms of the agreement, the public has access to the pond for fishing, waterfowl hunting, fossil collecting, and other recreational activities.

The cooling pond is a wastewater treatment works as defined by Section 301.415 of Title 35 of the *Illinois Administrative Code* (35 IAC 301.415). Under this definition, the cooling pond is not considered waters of the State under Illinois Administrative Code (35 IAC 301.440) or waters of the United States under the Federal Clean Water Act (40 CFR 230.3(s)), and so the cooling pond is not subject to State water quality standards. The cooling pond can be characterized as a managed ecosystem where IDNR fish stocking and other human activities primarily influence the species composition and population dynamics.

Since the beginning of the lease agreement between Exelon and IDNR, the IDNR has stocked the cooling pond with a variety of game fish, including largemouth bass *(Micropterus salmoides),* smallmouth bass (M. *dolomieu),* blue catfish *(Ictalurus furcatus),* striped bass *(Morone saxatilis),* crappie *(Pomoxis* spp.), walleye *(Sander vitreum),* and tiger muskellunge *(Esox masquinongy* x *lucius*). IDNR performs annual surveys to determine which fish to stock based on fishermen preferences, fish abundance, different species' tolerance to warm waters, predator and prey dynamics, and other factors. Because of the high water temperatures experienced in the summer months, introductions of warm-water species, such as largemouth bass and blue catfish, have been more successful than introductions of cool-water species, such as walleye and tiger muskellunge. Since annual surveys began in 1980, IDNR has collected 47 species in the cooling pond. In recent years, bluegill *(Lepomis macrochirus),* channel catfish *(Ictalurus punctatus),* threadfin shad *(Dorosoma petenense),* and common carp (*Cyprinus carpio)* have been among the most abundant species in the cooling pond. Gizzard shad *(Dorosoma cepedianum),* one of the most frequently affected species during periods of elevated pond temperatures, have decreased in abundance dramatically in recent years, while bluegills, which can tolerate high temperatures with relatively high survival rates, have noticeably increased in relative abundance. IDNR-stocked warm water game species, such as largemouth bass and blue catfish, continue to persist in small numbers, while cooler water stocked species, such as walleye and tiger muskellunge, no longer appear in IDNR survey collections. No federally listed species or designated critical habitats protected under the Endangered Species Act (ESA) occur within or near the cooling pond.

The Kankakee River serves as the source of makeup water for the cooling pond. The river also receives continuous blowdown from the cooling pond. Water is withdrawn from a small river screen house located on the Kankakee River, and liquid effluents from Braidwood are discharged into the cooling pond blowdown line, which subsequently discharges into the Kankakee River.

The plant site and environs are described in greater detail in Chapter 3 of the NRC's November 2015, Generic Environmental Impact Statement for License Renewal of Nuclear Plants: Regarding Braidwood Station, Units 1 and 2, Final Report (NUREG–1437, Supplement 55; ADAMS Accession No. ML15314A814) (herein referred to as the ''Braidwood FSEIS'' [Final Supplemental Environment Impact Statement]). Figure 3–5 on page 3–7 of the Braidwood FSEIS depicts the Braidwood plant layout, and Figure 3–4 on page 3–6 depicts the cooling pond, including the portion of the pond that constitutes the essential cooling pond (or UHS) and the blowdown line to the Kankakee River.

Description of the Proposed Action

The proposed action would revise the Braidwood TS to allow a temporary increase in the allowable average temperature of water withdrawn from the UHS and supplied to the plant for cooling from ≤102 °F (38.9 °C) to ≤102.8 °F (39.3 °C) until September 30, 2020. Specifically, the proposed action would revise TS S R 3.7.9.2, which currently states, ''Verify average water temperature of UHS is ≤102 °F,'' to add the statement, ''Verify average water temperature of the UHS is ≤102.8 °F until September 30, 2020. After September 30, 2020, verify average water temperature of UHS is ≤ 102 °F'' The amendments would also permanently extend the completion time for TS 3.7.9 Required Action A.1, which requires Exelon to place Braidwood in hot standby (Mode 3), from 6 hours to 12 hours when the UHS is inoperable due to the average water temperature. The completion time for placing Braidwood in hot standby for all other reasons would remain 6 hours. To implement this revision, TS 3.7.9 Required Action A.1 would be divided into two conditions: Condition A and Condition B.

Under the current TS, if the average UHS temperature as measured at the discharge of the operating essential service water system pumps is greater than 102 °F (38.9 °C), TS 3.7.9 Required Actions A.1 and A.2 would be entered concurrently and would require the licensee to place Braidwood in hot standby (Mode 3) within 6 hours and cold shutdown (Mode 5) within 36 hours. The proposed action would allow Braidwood to continue to operate during times when the UHS indicated average water temperature exceeds 102 °F (38.9 °C) but is less than or equal to 102.8 °F (39.3 °C) until September 30, 2020. The current TS's UHS average water temperature limit of 102 °F (38.9 °C) would remain applicable to all other time periods beyond September 30, 2020. The proposed action would also allow for 12 hours to complete hot standby (Mode 3) when temperatures exceed the SR (*i.e.,* if the UHS indicated temperature is greater than 102.8 °F (39.3 °C) through September 30, 2020, or greater than 102 °F (38.9 °C) during any other time period). The proposed action would not affect the 6-hour completion time for placing Braidwood in hot standby for any reasons other than exceeding the average water temperature condition.

The proposed action is in accordance with the licensee's application dated

July 15, 2020 as supplemented by letter dated August 14, 2020.

Need for the Proposed Action

The licensee has requested the proposed amendments in connection with recent meteorological and atmospheric conditions that have resulted in the TS UHS temperature being challenged. These conditions include elevated air temperatures, high humidity, and low wind speed. Specifically, from July 4, 2020, through July 9, 2020, northern Illinois experienced high air temperatures and drought conditions, which caused sustained elevated UHS temperatures.

The proposed action would provide the licensee with operational flexibility until September 30, 2020, during which continued high UHS temperatures are likely so that the plant shutdown criteria specified in the TS are not triggered. The proposed action would also provide the licensee with a longer time to place the plant in hot standby when the allowable average water temperature is exceeded.

Environmental Impacts of the Proposed Action

With regard to radiological impacts, the proposed action would not result in any changes in the types of radioactive effluents that may be released from the plant offsite. No significant increase in the amount of any radioactive effluent released offsite or significant increase in occupational or public radiation exposure is expected from the proposed action. Separate from this EA, the NRC staff is evaluating the licensee's safety analyses of the potential radiological consequences of an accident that may result from the proposed action. The results of the NRC staff's safety analysis will be documented in a safety evaluation (SE). If the NRC staff concludes in the SE that all pertinent regulatory requirements related to radiological effluents are met by the proposed UHS temperature limit increase, then the proposed action would result in no significant radiological impact to the environment. The NRC staff's SE will be issued with the license amendments, if approved by the NRC. If the NRC staff concludes that all pertinent regulatory requirements are not met by the proposed UHS temperature limit increase, the requested amendment would not be issued.

With regard to potential non-radiological impacts, temporarily raising the maximum allowable UHS temperature from ≤102 °F (38.9 °C) to ≤102.8 °F (39.3 °C) could cause increased cooling pond water temperatures until September 30, 2020. Because the proposed action would not affect Braidwood's licensed thermal power level, the temperature rise across the condensers as cooling water travels through the cooling system would remain constant. Thus, if water in the UHS were to rise to 102.8 °F (39.3 °C), heated water returning to the cooling pond through the discharge canal, which lies west of the river screen house, would also experience a corresponding 0.8 °F (0.4 °C) increase. That additional heat load would dissipate across some thermal gradient as discharged water travels down the discharge canal and through the 99-ac (40-ha) UHS.

Fish kills are likely to occur when cooling pond temperatures rise above 95 °F (35 °C), the temperature at which most fish in the cooling pond are thermally stressed. For example, Section 3.7.4 of the Braidwood FSEIS describes six fish kill events for the period of 2001 through 2015. The fish kill events, which occurred in July 2001, August 2001, June 2005, August 2007, June 2009, and July 2012, primarily affected threadfin shad and gizzard shad, although bass, catfish, carp, and other game fish were also affected. Reported peak temperatures in the cooling pond during these events ranged from 98.4 °F (36.9 °C) to over 100 °F (37.8 °C), and each event resulted in the death of between 700 to as many as 10,000 fish. During the July 2012 event, cooling pond temperatures exceeded 100 °F (37.8 °C), which resulted in the death of approximately 3,000 gizzard shad and 100 bass, catfish, and carp (ADAMS Accession No. ML14339A044). This event coincided with the NRC's granting of Enforcement Discretion to allow Braidwood to continue to operate above the TS limit of ≤100 °F (37.8 °C). The IDNR attributed this event, as well as four of the other fish kill events, to high cooling pond temperatures resulting from Braidwood operation. Appendix B, Section 4.1 of the Braidwood renewed facility operating licenses (ADAMS Accession Nos. ML053040362 and ML053040366), requires Exelon to report to the NRC the occurrence of unusual or important environmental events, including fish kills, causally related to plant operation. Since the issuance of the Braidwood FSEIS in November 2015, Exelon has not reported any additional fish kill events to the NRC. Although not causally related to plant operation, fish kills have occurred since this time, the most recent of which occurred in August 2018 and July 2020.

In Section 4.7.1.3 of the Braidwood FSEIS, the NRC staff concluded that thermal impacts associated with continued operation of Braidwood during the license renewal term would result in SMALL to MODERATE impacts to aquatic resources in the cooling pond. MODERATE impacts would primarily be experienced by gizzard shad and other non-stocked and low-heat tolerant species. As part of its conclusion, the NRC staff also noted that because the cooling pond is a highly managed system, any cascading effects that result from the loss of gizzard shad (such as reduction in prey for stocked species, which in turn could affect those stocked species' populations) could be mitigated through IDNR's annual stocking and continual management of the pond. At that time, the UHS TS limit was ≤100 °F (37.8 °C).

In 2016, the NRC granted license amendments that increased the allowable UHS average water temperature TS limit from ≤100 °F (38.9 °C) to ≤102.0 °F (39.3 °C) (ADAMS Accession No. ML16133A438). In the EA associated with these amendments (ADAMS Accession No. ML16181A007), the NRC staff concluded that increasing the TS limit to ≤102.0 °F (38.9 °C) would have no significant environmental impacts, and the NRC issued a FONSI with the EA.

Regarding the proposed action, the proposed increase in the allowable UHS average water temperature limit by 0.8 °F (0.4 °C) would not increase the likelihood of a fish kill event attributable to high cooling pond temperatures because the current TS limit for the UHS of 102.0 °F (38.9 °C) already allows cooling pond temperatures above those at which most fish species are thermally stressed (95 °F (35 °C)). In effect, if the UHS temperature rises to the current TS limit, fish within or near the discharge canal, within the flow path between the discharge canal and UHS, or within the UHS itself would have already experienced thermal stress and possibly died. Thus, an incremental increase in the allowable UHS water temperature by 0.8 °F (0.4 °C) and the corresponding temperature increases within and near the discharge canal and within the flow path between the discharge canal and UHS would not significantly affect the number of fish kill events experienced in the cooling pond. Additionally, the proposed action would only increase the allowable UHS average water temperature until September 30, 2020. Thus, any impacts to the aquatic community of the cooling pond, if experienced, would be temporary in nature, and fish populations would likely recover relatively quickly.

While the proposed action would not affect the likelihood of a fish kill event occurring during periods when the average UHS water temperature approaches the TS limit, the proposed action could increase the number of fish killed per high temperature event. For fish with thermal tolerances at or near 95 °F (35 °C), there would likely be no significant difference in the number of affected fish per high temperature event because, as already stated, these fish would have already experienced thermal stress and possibly died and the additional temperature increase would not measurably affect the mortality rate of these individuals. For fish with thermal tolerances above 95 °F (35 °C), such as bluegill, increased mortality is possible, as described below.

The available scientific literature provides conflicting information as to whether incremental temperature increases would cause a subsequent increase in mortality rates of bluegill or other high-temperature-tolerant fish when temperatures exceed 100 °F (37.8 °C). For instance, in laboratory studies, Banner and Van Arman (1973) demonstrated 85 percent survival of juvenile bluegill after 24 hours of exposure to 98.6 °F (37.0 °C) water for stock acclimated to 91.2 °F (32.9 °C). At 100.0 °F (37.8 °C), survival decreased to 25 percent, and at 100.4 °F (38.0 °C) and 102.0 °F (38.9 °C), no individuals survived. Even at one hour of exposure to 102.0 °F (38.9 °C) water, average survival was relatively low at between 40 to 67.5 percent per replicate. However, in another laboratory study, Cairns (1956 in Banner and Van Arman 1973) demonstrated that if juvenile bluegill were acclimated to higher temperatures at a 3.6 °F (2.0 °C) increase per day, individuals could tolerate water temperatures up to 102.6 °F (39.2 °C) with 80 percent survival after 24 hours of exposure.

Although these studies provide inconsistent thermal tolerance limits, information from past fish kill events indicates that Cairns' results better describe the cooling pond's bluegill population because Exelon has not reported bluegill as one of the species that has been affected by past high temperature events. Thus, bluegills are likely acclimating to temperature rises at a rate that allows those individuals to remain in high temperature areas until temperatures decrease or that allows individuals time to seek refuge in cooler areas of the pond. Alternately, if Banner and Van Arman's results were more predictive, 75 percent or more of bluegill individuals in high temperature areas of the cooling pond could be expected to die at temperatures approaching or exceeding 100 °F (37.8 °C) for 24 hours, and shorter exposure time would likely result in the death of some reduced percentage of bluegill individuals.

Under the proposed action, fish exposure to temperatures approaching the proposed UHS TS average water temperature limit of 102.8 °F (39.3 °C) and those exposed to the associated discharge, which would be 0.8 °F (0.4 °C) higher than under the current TS limit, for at least one hour would result in observable deaths. However, as stated previously, Exelon has not reported bluegill as one of the species that has been affected during past fish kills. Consequently, the NRC staff assumes that bluegill and other high-temperature-tolerant species in the cooling pond would experience effects similar to those observed in Cairn's study. Based on Cairn's results, the proposed action's incremental and short-term increase of 0.8 °F (0.4 °C) could result in the death of some additional high-temperature-tolerant individuals, especially in cases where cooling pond temperatures rise dramatically over a short period of time (more than 3.6 °F (2.0 °C) in a 24-hour period).

Nonetheless, the discharge canal, flow path between the discharge canal and the UHS, and the UHS itself is a small portion of the cooling pond. Thus, while the incremental increase would likely increase the area over which cooling pond temperatures would rise, the majority of the cooling pond would remain at tolerable temperatures, and fish would be able to seek refuge in those cooler areas. Therefore, only fish within or near the discharge canal, within the flow path between the discharge canal and UHS, or within the UHS itself at the time of elevated temperatures would likely be affected, and fish would experience such effects to lessening degrees over the thermal gradient that extends from the discharge canal. This would result in no significant difference in the number of fish killed per high temperature event resulting from the proposed action when compared to current operations for those species with thermal tolerances at or near 95 °F (35 °C) and an insignificant increase in the number of individuals affected for species with thermal tolerances above 95 °F (35 °C), such as bluegill. Additionally, the cooling pond is a managed ecosystem in which fish stocking, fishing pressure, and predator-prey relationships constitute the primary population pressures.

Fish populations affected by fish kills generally recover quickly, and thus, fish kills do not appear to significantly influence the fish community structure. This is demonstrated by the fact that the species that are most often affected by high temperature events (threadfin shad and gizzard shad) are also among the most abundant species in the cooling pond. Managed species would continue to be assessed and stocked by the IDNR on an annual basis in accordance with the lease agreement between Exelon and IDNR. Continued stocking would mitigate any minor effects resulting from the proposed action.

The proposed action also would permanently extend the completion time for placing Braidwood in hot standby (Mode 3) from 6 hours to 12 hours when the UHS is inoperable due to average water temperature. This change would still require Exelon to transition the plant to hot standby if the average water temperature limit is exceeded, but it would give Exelon more time to complete this action. This would not have any measurable or noticeable impact on the aquatic community.

Based on the foregoing analysis, the NRC staff concludes that the proposed action would not result in significant impacts to aquatic resources in the cooling pond.

Some terrestrial species, such as birds or other wildlife, rely on fish or other aquatic resources from the cooling pond as a source of food. The NRC staff does not expect any significant impacts to birds or other wildlife because, if a fish kill occurs, the number of dead fish would be a small proportion of the total population of fish in the cooling pond. Furthermore, during fish kills, birds and other wildlife could consume many of the floating, dead fish. Additionally, and as described previously, the NRC staff does not expect that the proposed action would result in a significant difference in the number or intensity of fish kill events or otherwise result in significant impacts on aquatic resources in the cooling pond.

With respect to water resources and ecological resources along and within the Kankakee River, the Illinois Environmental Protection Agency (IEPA) imposes regulatory controls on Braidwood's thermal effluent through Title 35, Environmental Protection, Section 302, 'Water Quality Standards,'' of the Illinois Administrative Code (35 IAC 302) and through the National Pollutant Discharge Elimination System (NPDES) permitting process pursuant to the Clean Water Act. Section 302 of the Illinois Administrative Code stipulates that ''[t]he maximum temperature rise shall not exceed 2.8 °C (5 °F) above natural receiving water body

temperatures,'' (35 IAC 302.211(d)) and that ''[w]ater temperature at representative locations in the main river shall at no time exceed 33.7 °C (93 °F) from April through November and 17.7 °C (63 °F) in other months'' (35 IAC 302.211(e)). Additional stipulations pertaining to the mixing zone further protect water resources and biota from thermal effluents. The Braidwood NPDES permit contains special conditions that mirror these temperature requirements and that stipulate more detailed temperature requirements at the edge of the mixing zone. Under the proposed action, Braidwood thermal effluent would continue to be limited by the Illinois Administrative Code and the Braidwood NPDES permit to ensure that Braidwood operations do not create adverse effects on water resources or ecological resources along or within the Kankakee River. Occasionally, Exelon has applied for a provisional variance to allow higher-than-permitted temperatures at the edge of the discharge mixing zone. For instance, Exelon applied for and the IEPA granted one provisional variance in 2012 during a period of extremely warm weather and little to no precipitation. Exelon reported no fish kills or other events to the IEPA or the NRC that would indicate adverse environmental effects resulting from the provisional variance. The details of this provisional variance are described in Section 4.7.1.3 of the Braidwood FSEIS.

Under the proposed action, Exelon would remain subject to the regulatory controls described above. The NRC staff finds it reasonable to assume that Exelon's continued compliance with, and the State's continued enforcement of, the Illinois Administrative Code and the Braidwood NPDES permit would ensure that Kankakee River water and ecological resources are protected. Further, the proposed action would not alter the types or amount of effluents being discharged to the river as blowdown. Therefore, the NRC staff does not expect any significant impacts to water resources or ecological resources within and along the Kankakee River as a result of temporarily increasing the allowable UHS average water temperature TS limit or permanently extending the completion time for placing Braidwood in hot standby when the UHS is inoperable due to the average water temperature.

With respect to federally listed species, the NRC staff consulted with the U.S. Fish and Wildlife Service (FWS) pursuant to section 7 of the ESA during its license renewal environmental review for Braidwood. During that consultation, the NRC staff found that the sheepnose (*Plethobasus cyphyus*) and snuffbox (*Epioblasma triquetra*) mussels had the potential to occur in the areas that would be directly or indirectly affected by license renewal (*i.e.,* the action area). In September 2015, Exelon transmitted the results of a mussel survey to the NRC and FWS (ADAMS Accession No. ML15274A093). The survey documented the absence of federally listed mussels near the Braidwood discharge site in the Kankakee River. Based on this survey and other information described in the Braidwood FSEIS, the NRC concluded that the license renewal may affect, but is not likely to adversely affect the sheepnose mussel, and the NRC determined that license renewal would have no effect on the snuffbox mussel. The FWS concurred with the NRC's ''not likely to adversely affect'' determination in a letter dated October 20, 2015 (ADAMS Accession No. ML15299A013). The results of the consultation are further summarized in the Record of Decision for Braidwood license renewal (ADAMS Accession No. ML15322A317).

As previously described, impacts of the proposed action would be confined to the cooling pond and would not affect water resources or ecological resources along and within the Kankakee River. The NRC's previous ESA section 7 consultation confirmed that no federally listed aquatic species occur within or near the cooling pond. The NRC has not identified any information indicating the presence of federally listed species in the area since that consultation concluded, and the FWS has not listed any new aquatic species that may occur in the area since that time. The proposed action would not result in any disturbance or other impacts to terrestrial habitats, and thus, no federally listed terrestrial species would be affected. Accordingly, the NRC staff concludes that the proposed action would have no effect on federally listed species or designated critical habitat. Consultation with the FWS for the proposed action is not necessary because Federal agencies are not required to consult with the FWS if the agency determines that an action will have no effect on listed species or critical habitat (ADAMS Accession No. ML16120A505).

The NRC staff has identified no foreseeable land use, visual resource, noise, or waste management impacts given that the proposed action would not result in any physical changes to Braidwood facilities or equipment or changes any land uses on or off site. The NRC staff has identified no air quality impacts given that the proposed action would not result in air emissions beyond what would be experienced during current operations. Additionally, there would be no socioeconomic, environmental justice, or historic and cultural resource impacts associated with the proposed action since no physical changes would occur beyond the site boundaries and any impacts would be limited to the cooling pond.

Based on the foregoing analysis, the NRC staff concludes that the proposed action would have no significant environmental impacts.

Environmental Impacts of the Alternatives to the Proposed Action

As an alternative to the proposed action, the NRC staff considered the denial of the proposed action (*i.e.,* the ''no-action'' alternative). Denial of the proposed action would result in no changes to the current TS. Thus, under the proposed action, the licensee would continue to be required to place Braidwood in hot standby (Mode 3) if average UHS water temperatures exceed 102 °F (38.9 °C) for the temporary period of July 15, 2020, through September 30, 2020. The TS would continue to specify a 6-hour timeframe for placing Braidwood in hot standby. The no-action alternative would result in no change in current environmental conditions or impacts at Braidwood.

Alternative Use of Resources

There are no unresolved conflicts concerning alternative uses of available resources under the proposed action.

Agencies and Persons Consulted

No additional agencies or persons were consulted regarding the environmental impact of the proposed action. However, in accordance with 10 CFR 50.91(b), the licensee provided copies of its application to the State of Illinois. In accordance with 10 CFR 50.91(b), the State of Illinois will have the opportunity to provide comments before issuance of the amendments.

III. Finding of No Significant Impact

The NRC is considering issuing amendments for Renewed Facility Operating License Nos. NPF–72 and NPF–77, issued to Exelon for operation of Braidwood that would revise the TS for the plant to temporarily increase the allowable average temperature of the UHS and permanently extend the completion time for placing Braidwood in hot standby when the UHS is inoperable due to the average water temperature.

On the basis of the EA included in Section II above and incorporated by

reference in this finding, the NRC concludes that the proposed action would not have significant effects on the quality of the human environment. The NRC's evaluation considered information provided in the licensee's application as well as the NRC's independent review of other relevant environmental documents. Section IV below lists the environmental documents related to the proposed action and includes information on the availability of these documents. Based on its finding, the NRC has decided not to prepare an environmental impact statement for the proposed action.

This FONSI and other related environmental documents are accessible online in the ADAMS Public Documents collection at *https://www.nrc.gov/reading-rm/adams.html.* Persons who do not have access to ADAMS or who encounter problems in accessing the documents located in ADAMS should contact the NRC's PDR reference staff by telephone at 1–800–397–4209 or 301–415–4737, or by email to *pdr.resource@nrc.gov.*

IV. Availability of Documents

The documents identified in the following table are available to interested persons through one or more of the following methods, as indicated.

Document	ADAMS Accession No.
License Amendment Request	
Exelon Generation Company, LLC	ML20197A434.
License Amendment to Braidwood Station, Units 1 and 2, Technical Specification 3.7.9, ''Ultimate Heat Sink.''	
Dated July 15, 2020.	
Exelon Generation Company, LLC	ML20227A375.
Supplement to License Amendment to Braidwood Station, Unit 1 and 2, Technical Specification 3.7.9, ''Ultimate Heat Sink.''	
Dated August 14, 2020.	
Other Referenced Documents	
Cairns J. 1956. Effects of heat on fish. *Industrial Wastes,* 1 :180–183	n/a [1].
Banner A, Van Arman JA. 1973. Thermal effects on eggs, larvae and juveniles of bluegill sunfish. Washington, DC: U.S. Environmental Protection Agency. EPA–R3–73–041	n/a [1].
Ecological Specialists, Inc.	ML15274A093 (Package).
Final Report: Five Year Post-Construction Monitoring of the Unionid Community Near the Braidwood Station Kankakee River Discharge.	
Dated September 29, 2015.	
Exelon Generation Company, LLC	ML14339A044.
Byron and Braidwood Stations, Units 1 and 2, License Renewal Application, Braidwood Station Applicant's Environmental Report, Responses to Requests for Additional Information, Environmental RAIs AQ–11 to AQ–15.	
Dated April 30, 2014.	
U.S. Fish and Wildlife Service	ML16120A505.
Endangered Species Consultations: Frequently Asked Questions.	
Dated July 15, 2013.	
U.S. Fish and Wildlife Service	ML15299A013.
Concurrence Letter Concluding Informal Consultation with the NRC for Braidwood License Renewal.	
Dated October 20, 2015.	
U.S. Nuclear Regulatory Commission	ML15314A814.
Generic Environmental Impact Statement for License Renewal of Nuclear Plants: Regarding Braidwood Station, Units 1 and Final Report (NUREG–1437, Supplement 55).	
Dated November 30, 2015.	
U.S. Nuclear Regulatory Commission	ML053040362.
Exelon Generation Company, LLC; Docket No. STN 50–456; Braidwood Station, Unit 1 Renewed Facility Operating License.	
Issued on January 27, 2016.	
U.S. Nuclear Regulatory Commission	ML053040366.
Exelon Generation Company, LLC; Docket No. STN 50–457; Braidwood Station, Unit 2 Renewed Facility Operating License.	
Issued on January 27, 2016.	
U.S. Nuclear Regulatory Commission	ML15322A317.
Record of Decision; U.S. Nuclear Regulatory Commission; Docket Nos. 50–456 and 560–457; License Renewal Application for Braidwood Station, Units 1 and 2.	
Dated January 27, 2016.	
U.S. Nuclear Regulatory Commission	ML16181A007.
Environmental Assessment and Finding of No Significant Impact Related to Ultimate Heat Sink Modification.	
Dated July 18, 2016.	
U.S. Nuclear Regulatory Commission	ML16133A438.
Braidwood Station, Units 1 and 2—Issuance of Amendments Re: Ultimate Heat Sink Temperature Increase.	
Dated July 26, 2016.	

[1] These references are subject to copyright laws and are, therefore, not reproduced in ADAMS.

Dated: September 3, 2020.

For the Nuclear Regulatory Commission.

Joel S. Wiebe,

Senior Project Manager, Plant Licensing Branch III–2, Division of Operating Reactor Licensing, Office of Nuclear Reactor Regulation.

[FR Doc. 2020–19937 Filed 9–9–20; 8:45 am]

BILLING CODE 7590–01–P

POSTAL REGULATORY COMMISSION

[Docket Nos. MC2020–241 and CP2020–271; MC2020–242 and CP2020–272]

New Postal Products

AGENCY: Postal Regulatory Commission.

ACTION: Notice.

SUMMARY: The Commission is noticing a recent Postal Service filing for the Commission's consideration concerning negotiated service agreements. This notice informs the public of the filing, invites public comment, and takes other administrative steps.

DATES: *Comments are due:* September 15, 2020.

ADDRESSES: Submit comments electronically via the Commission's Filing Online system at *http://www.prc.gov.* Those who cannot submit comments electronically should contact the person identified in the **FOR FURTHER INFORMATION CONTACT** section by telephone for advice on filing alternatives.

FOR FURTHER INFORMATION CONTACT: David A. Trissell, General Counsel, at 202–789–6820.

SUPPLEMENTARY INFORMATION:

Table of Contents

I. Introduction
II. Docketed Proceeding(s)

I. Introduction

The Commission gives notice that the Postal Service filed request(s) for the Commission to consider matters related to negotiated service agreement(s). The request(s) may propose the addition or removal of a negotiated service agreement from the market dominant or the competitive product list, or the modification of an existing product currently appearing on the market dominant or the competitive product list.

Section II identifies the docket number(s) associated with each Postal Service request, the title of each Postal Service request, the request's acceptance date, and the authority cited by the Postal Service for each request. For each request, the Commission appoints an officer of the Commission to represent the interests of the general public in the proceeding, pursuant to 39 U.S.C. 505 (Public Representative). Section II also establishes comment deadline(s) pertaining to each request.

The public portions of the Postal Service's request(s) can be accessed via the Commission's website (*http://www.prc.gov*). Non-public portions of the Postal Service's request(s), if any, can be accessed through compliance with the requirements of 39 CFR 3011.301.[1]

The Commission invites comments on whether the Postal Service's request(s) in the captioned docket(s) are consistent with the policies of title 39. For request(s) that the Postal Service states concern market dominant product(s), applicable statutory and regulatory requirements include 39 U.S.C. 3622, 39 U.S.C. 3642, 39 CFR part 3030, and 39 CFR part 3040, subpart B. For request(s) that the Postal Service states concern competitive product(s), applicable statutory and regulatory requirements include 39 U.S.C. 3632, 39 U.S.C. 3633, 39 U.S.C. 3642, 39 CFR part 3035, and 39 CFR part 3040, subpart B. Comment deadline(s) for each request appear in section II.

II. Docketed Proceeding(s)

1. *Docket No(s).:* MC2020–241 and CP2020–271; *Filing Title:* USPS Request to Add Priority Mail & First-Class Package Service Contract 166 to Competitive Product List and Notice of Filing Materials Under Seal; *Filing Acceptance Date:* September 3, 2020; *Filing Authority:* 39 U.S.C. 3642, 39 CFR 3040.130 through 3040.135, and 39 CFR 3035.105; *Public Representative:* Kenneth R. Moeller; *Comments Due:* September 15, 2020.

2. *Docket No(s).:* MC2020–242 and CP2020–272; *Filing Title:* USPS Request to Add Priority Mail & First-Class Package Service Contract 167 to Competitive Product List and Notice of Filing Materials Under Seal; *Filing Acceptance Date:* September 3, 2020; *Filing Authority:* 39 U.S.C. 3642, 39 CFR 3040.130 through 3040.135, and 39 CFR 3035.105; *Public Representative:* Kenneth R. Moeller; *Comments Due:* September 15, 2020.

This Notice will be published in the **Federal Register**.

Erica A. Barker,

Secretary.

[FR Doc. 2020–19997 Filed 9–9–20; 8:45 am]

BILLING CODE 7710–FW–P

[1] *See* Docket No. RM2018–3, Order Adopting Final Rules Relating to Non-Public Information, June 27, 2018, Attachment A at 19–22 (Order No. 4679).

SECURITIES AND EXCHANGE COMMISSION

[Release No. 34–89768; File No. SR–CBOE–2020–060]

Self-Regulatory Organizations; Cboe Exchange, Inc.; Order Granting Accelerated Approval of a Proposed Rule Change, as Modified by Amendment No. 1 Thereto, To Permanently Adopt the Related Futures Cross Order Type

September 4, 2020.

I. Introduction

On July 1, 2020, Cboe Exchange, Inc. (the ''Exchange'' or ''Cboe Options'') filed with the Securities and Exchange Commission (''Commission''), pursuant to Section 19(b)(1) of the Securities Exchange Act of 1934 (''Act'')[1] and Rule 19b–4 thereunder,[2] a proposed rule change to permanently adopt the Related Futures Cross (''RFC'') order type. The proposed rule change was published for comment in the **Federal Register** on July 21, 2020.[3] On August 13, 2020, the Exchange filed Amendment No. 1 to the proposed rule change.[4] The Commission received one comment on the proposed rule change.[5] This order approves the proposed rule change, as modified by Amendment No. 1, on an accelerated basis.

II. Summary of the Proposal, as Modified by Amendment No. 1

From March 16 to June 12, 2020, the Exchange closed its trading floor in response to the coronavirus pandemic. As a result, the Exchange operated in an all-electronic configuration. Because the trading floor was closed during this time, floor brokers could not execute crosses of option combos (*i.e.,* synthetic futures) on the trading floor on behalf of market participants who were exchanging futures contracts in either VIX or SPX for related options positions in order to swap related exposures,[6] and

[1] 15 U.S.C. 78s(b)(1).

[2] 17 CFR 240.19b–4.

[3] *See* Securities Exchange Act Release No. 89325 (July 15, 2020), 85 FR 44125.

[4] Amendment No. 1 is publicly available on the Commission's website at: *https://www.sec.gov/comments/sr-cboe-2020-060/srcboe2020060-7640381-222308.pdf.*

[5] *See* Letter from Joyana Pilquist, CFA, dated August 24, 2020. The Commission believes this comment, which relates to FLEX options, is outside the scope of this proposed rule change as CBOE is not proposing to change the substantive terms of FLEX options transactions. Accordingly, the Commission does not believe this comment can be appropriately addressed through this proposal.

[6] In the Notice, the Exchange provides the following example of such a transaction: If a market participant has positions in VIX options but would

Continued

there was no means to electronically pair and execute the options legs of these transactions on the Exchange.

To enable Trading Permit Holders (''TPHs'') to execute the options part of these transactions when the floor was closed, the Exchange adopted the electronic RFC order type under Rule 5.24(e)(1)(D).[7] RFCs under Rule 5.24(e)(1)(D) were automatically executed without exposure to open outcry due to the all-electronic environment at the time.[8] These RFCs were also required to execute in accordance with the same priority principles that apply to all complex orders on CBOE.[9] Specifically: (i) Each option leg must have executed at a price that complies with Rule 5.33(f)(2), provided that no option leg executes at the same price as a Priority Customer Order in the Simple Book; (ii) each option leg must have executed at a price at or between the national best bid or offer (''NBBO'') for the applicable series; and (iii) the execution price must have been better than the price of any complex order resting in the complex order book, unless the RFC Order was a Priority Customer Order and the resting complex order is a non-Priority Customer Order, in which case the execution price may be the same as or better than the price of the resting complex order.[10] If an RFC could not have executed in accordance with these requirements, the CBOE System would have cancelled the order.[11] When the CBOE trading floor reopened on June 15, 2020, RFC Orders were no longer available,[12] though, the RFC rule text in Rule 5.24(e)(1)(D) remains in the CBOE rulebook. Accordingly, under CBOE's current rules with an operable trading floor, TPHs no longer have the option to submit electronic RFC Orders for automatic execution.

In this proposal, the Exchange seeks to adopt electronic RFC Orders on a permanent basis.[13] The Exchange explains that the need to reduce risk is prevalent in VIX and SPX, particularly when the markets are volatile, and that customers often have corresponding futures that could make these transactions possible.[14] The Exchange further explains that it is necessary for both the option and future legs of the transactions that would be subject to RFC to occur between the same market participants in order to successfully swap the related exposures; while in-crowd market participants have the opportunity to bid or offer to participate on the trade on the floor (*i.e.,* to break up the options cross between the two parties), the Exchange represents that other TPHs on the floor generally declined on a voluntary basis to do so upon hearing that the cross was part of an exchange of related futures contracts.[15]

To facilitate this proposed rule change, the Exchange first proposes to delete Rule 5.24(e)(1)(D). Second, the Exchange proposes to add RFC Orders to its list of complex orders under Rule 5.33(b)(5). For purposes of electronic trading, RFC Orders would be identical to the current definition in Rule 5.24(e)(1)(D) and defined as an SPX or VIX complex order comprised of an option combo order coupled with a contra-side order or orders totaling an equal number of option combo orders. For purposes of open outcry trading, an RFC order is an SPX or VIX complex order comprised of an option combo that may execute against a contra-side RFC order or orders totaling an equal number of option combo orders. Furthermore, an RFC order must be identified to the Exchange as being part of an exchange of option contracts for related futures positions. Rule 5.33(m) would be adopted to add the same priority protection principles that were adopted under Rule 5.24(e)(1)(D),[16] and if an RFC Order under Rule 5.33 cannot be executed in accordance with these priority principles, it will be cancelled. Finally, the Exchange proposes to amend Rules 5.83 and 5.85 to permit RFC Orders to be handled by a floor broker for execution on the floor without representation on the floor rather than submitted for automatic execution electronically.

III. Discussion and Commission Findings

After careful review and consideration, the Commission finds that the proposed rule change, as modified by Amendment No. 1, is consistent with the requirements of the Act and the rules and regulations thereunder that are applicable to a national securities exchange.[17] In particular, the Commission finds that the proposed rule change is consistent with Section 6(b)(5) of the Act,[18] which requires, among other things, that the rules of a national securities exchange be designed to promote just and equitable principles of trade, to remove impediments to and perfect the mechanism of a free and open market and a national market system, and, in general, to protect investors and the public interest, and that the rules of a national securities exchange not be designed to permit unfair discrimination between customers, issuers, brokers or dealers.

This proposal has two components. First, the Exchange seeks to make electronic RFC Orders permanent, even when the trading floor of the Exchange is operable. The electronic RFC order type is designed to allow market participants trading SPX and VIX options to more efficiently execute risk mitigating transactions on the Exchange, as explained above.[19] The Exchange represents that it received feedback from customers regarding the benefits of electronic RFC Orders when its floor was closed—including the efficiency this order type provided with respect to the execution of these crosses—which is what prompted it to file this proposal.[20] Second, when the trading floor is operative, amended Rules 5.83 and 5.85 would permit RFC Orders to be handled by a floor broker for execution without representation on the trading floor as an alternative to automatic electronic execution.

In Amendment No. 1, the Exchange further reiterates that there is a mutual understanding among TPHs on the floor to not break up the options leg of transactions that would qualify for the proposed RFC order type due to the necessity of keeping the terms of the

prefer to hold a corresponding position in VIX futures (such as, for example, to reduce margin or risk related to the option positions), that market participant may swap its VIX options positions with another market participant(s)'s VIX futures positions that have corresponding risk exposure. *See* Notice, *supra* note 3, at 44125. The Exchange explains that the transaction between the market participants for the futures positions occurs in accordance with the rules of the applicable designated contract market that lists the futures. *See id.,* n.3 (citing Cboe Futures Exchange LLC Rule 414). The Exchange further explains that these are riskless transactions that carry no profit or loss for the market participants that are party to the transactions, but rather are intended to provide a seamless method for market participants to reduce margin and capital requirements while maintaining the same risk exposure within their portfolios. *See* Notice, *supra* note 3, at 44125.

[7] *See* Securities Exchange Act Release No. 88447 (March 20, 2020), 85 FR 17129 (March 26, 2020) (CBOE–2020–023).

[8] *See id.,* at 17131.

[9] *See id.,* at 17131.

[10] *See id.,* at 17131.

[11] *See id.,* at 17131.

[12] *See* Notice, *supra* note 3, at 44126.

[13] *See* Notice, *supra* note 3, at 44126–27 for a more detailed description of the proposal.

[14] *See* Notice, *supra* note 3, at 44125.

[15] *See id.* at 44125–26.

[16] *See* supra note 10 and accompanying text; *see also* Notice, *supra* note 3, 44126.

[17] In approving this proposed rule change, as amended, the Commission notes that it has considered the proposed rule's impact on efficiency, competition, and capital formation. *See* 15 U.S.C. 78c(f).

[18] 15 U.S.C. 78f(b)(5).

[19] *See also* Notice, *supra* note 3, at 44125–26, 44127–28.

[20] *See* Notice, *supra* note 3, at 44126.

hedging transactions unchanged through execution. The Exchange asserts that this understanding among TPHs contributes to smoother operations on the trading floor. The Exchange further argues that while the electronic RFC order type would preclude the options component of these hedging transactions to be broken up going forward, the benefits of permitting RFC Orders to execute as clean crosses greatly outweigh any detriments, if there are even any, that may result from exposing these orders for potential break up. The Exchange believes that the benefits of requiring a broker to expose an order on the trading floor generally flow to that order, which include the potential of price improvement for the order and to locate liquidity against which to execute the order. In the case of orders that would qualify to use the RFC order type, the Exchange asserts that the representing broker has already located the necessary liquidity to execute the order, as that is necessary given the nature of these transactions.

Based on the foregoing, the Commission finds that the proposed rule change is designed to promote just and equitable principles of trade, to remove impediments to and perfect the mechanism of a free and open market and a national market system, and, in general, to protect investors and the public interest. In addition to the above assertions and representations by the Exchange, the Commission notes that the proposed electronic RFC order type contains the same priority protection principles that were adopted under Rule 5.24(e)(1)(D) when the Exchange permitted electronic RFC Orders as clean crosses due to the closure of its trading floor. Furthermore, Rule 5.33(m) provides that: (i) An RFC order may only be entered in the standard increment applicable to the class; (ii) the execution of an RFC order must happen contemporaneously with the execution of the related futures position portion of the exchange; and (iii) the transaction involving the related futures position of the exchange must comply with all applicable rules of the designated contract market on which the futures are listed for trading. With regard to the proposed changes to Rules 5.83 and 5.85, RFC Orders handled by floor brokers would be covered by the same protections.

For the above reasons, the Commission finds that the proposed rule change, as modified by Amendment No. 1, is consistent with the requirements of the Act.

IV. Solicitation of Comments on Amendment No. 1

Interested persons are invited to submit written data, views, and arguments concerning the foregoing, including whether Amendment No. 1 to the proposed rule change is consistent with the Exchange Act. Comments may be submitted by any of the following methods:

Electronic Comments

- Use the Commission's internet comment form (*http://www.sec.gov/rules/sro.shtml*); or
- Send an email to *rule-comments@sec.gov.* Please include File Number SR–CBOE–2020–060 on the subject line.

Paper Comments

- Send paper comments in triplicate to Secretary, Securities and Exchange Commission, 100 F Street NE, Washington, DC 20549–1090.

All submissions should refer to File Number SR–CBOE–2020–060. This file number should be included on the subject line if email is used. To help the Commission process and review your comments more efficiently, please use only one method. The Commission will post all comments on the Commission's internet website (*http://www.sec.gov/rules/sro.shtml*). Copies of the submission, all subsequent amendments, all written statements with respect to the proposed rule change that are filed with the Commission, and all written communications relating to the proposed rule change between the Commission and any person, other than those that may be withheld from the public in accordance with the provisions of 5 U.S.C. 552, will be available for website viewing and printing in the Commission's Public Reference Room, 100 F Street NE, Washington, DC 20549, on official business days between the hours of 10:00 a.m. and 3:00 p.m. Copies of this filing will also be available for inspection and copying at the principal office of the Exchange. All comments received will be posted without change. Persons submitting comments are cautioned that we do not redact or edit personal identifying information from comment submissions. You should submit only information that you wish to make available publicly. All submissions should refer to File Number SR–CBOE–2020–060 and should be submitted on or before October 1, 2020.

V. Accelerated Approval of Proposed Rule Change, as Modified by Amendment No. 1

The Commission finds good cause to approve the proposed rule change, as modified by Amendment No. 1, prior to the 30th day after the date of publication of notice of Amendment No. 1 in the **Federal Register**.

Amendment No. 1 has two main aspects. First, in Amendment No. 1, the Exchange makes certain technical edits to the Exhibit 5 that was initially filed.[21] Second, as stated above, the Exchange expands its statutory basis analysis in Amendment No. 1 to provide additional arguments and representations to support its position that allowing RFC Orders to execute automatically without exposure is consistent with the Act. Furthermore, the Exchange also expands the analysis in its request that this filing be approved on an accelerated basis, and it adds an analysis to Item 8 of the filing to assert that the proposed CBOE RFC order type is ''virtually identical'' to a recently approved RFC order type on Miami International Securities Exchange, LLC.[22]

Amendment No. 1 does not change any substantive provisions of the proposed rule change that were noticed for public comment. It contains only minor, technical revisions to the proposed rule text, and it provides additional justification that the proposal is consistent with the Act. Accordingly, the Commission finds good cause, pursuant to Section 19(b)(2) of the Act,[23] to approve the proposed rule change, as modified by Amendment No. 1, on an accelerated basis.

VI. Conclusion

It is therefore ordered that, pursuant to Section 19(b)(2) of the Act,[24] the proposed rule change, as modified by Amendment No. 1, (SR–CBOE–2020–060) be, and hereby is, approved on an accelerated basis.

[21] Specifically, Amendment No. 1: Deletes the closing bracket and period from the end of Rule 5.24(e)(1)(C); deletes the opening bracket before Rule 5.24(e)(1)(D); inserts a closing bracket before the semi-colon at the end of Rule 5.24(e)(1)(D)(7), and deletes the closing bracket following the ''and'' at the end of Rule 5.24(e)(1)(D)(7); proposes to change current Rule 5.24(e)(1)(E) to Rule 5.24(e)(1)(D), and includes the introductory paragraph (with no other proposed changes) of that subparagraph in the Exhibit; and adds the current definition of a ''Post Only'' order in Rule 5.33(b) (with no proposed changes) to demonstrate where in that paragraph the proposed definition of an RFC order will be located.

[22] *See* Securities Exchange Act Release No. 89213 (July 1, 2020), 85 FR 41077 (July 8, 2020) (MIAX–2020–11).

[23] 15 U.S.C. 78s(b)(2).

[24] 15 U.S.C. 78s(b)(2).

For the Commission, by the Division of Trading and Markets, pursuant to delegated authority.[25]

J. Matthew DeLesDernier,

Assistant Secretary.

[FR Doc. 2020–20023 Filed 9–9–20; 8:45 am]

BILLING CODE 8011–01–P

SECURITIES AND EXCHANGE COMMISSION

[Release No. 34–89766; File No. SR–LTSE–2020–15]

Self-Regulatory Organizations; Long-Term Stock Exchange, Inc.; Notice of Filing and Immediate Effectiveness of a Proposed Rule Change To Continue Suspending the Application of Order Price Collars in Rule 11.190(f)(1) Until October 8, 2020

September 3, 2020.

Pursuant to Section 19(b)(1) of the Securities Exchange Act of 1934 (the ''Act'') [1], and Rule 19b–4 thereunder,[2] notice is hereby given that on September 3, 2020, Long-Term Stock Exchange, Inc. (''LTSE'' or the ''Exchange'') filed with the Securities and Exchange Commission (the ''Commission'') the proposed rule change as described in Items I and II below, which Items have been prepared by the self-regulatory organization. The Commission is publishing this notice to solicit comments on the proposed rule change from interested persons.

I. Self-Regulatory Organization's Statement of the Terms of Substance of the Proposed Rule Change

LTSE proposes to continue suspending until October 8, 2020, the provisions of Rule 11.190(f)(1) pending further systems development work.

The text of the proposed rule change is available at the Exchange's website at *https://longtermstockexchange.com/,* at the principal office of the Exchange, and at the Commission's Public Reference Room.

II. Self-Regulatory Organization's Statement on the Purpose of, and Statutory Basis for, the Proposed Rule Change

In its filing with the Commission, the self-regulatory organization included statements concerning the purpose of, and basis for, the proposed rule change and discussed any comments it received on the proposed rule change. The text of these statements may be examined at the places specified in Item IV below. The self-regulatory organization has prepared summaries, set forth in Sections A, B, and C below, of the most significant aspects of such statements.

A. Self-Regulatory Organization's Statement on the Purpose of, and the Statutory Basis for, the Proposed Rule Change [3]

1. Purpose

LTSE Rule 11.190(f)(1) prevents an incoming order or order resting on the Order Book, including those marked ISO, from executing at a price outside the Order Collar price range (*i.e.,* prevents buy orders from trading at prices above the collar and prevents sell orders from trading at prices below the collar). The Order Collar price range is calculated using the numerical guidelines for clearly erroneous executions (''CEE'').[4] Under Rule 11.190(f)(1), executions are permitted at prices within the Order Collar price range, inclusive of the boundaries. Thus, Rule 11.190(f)(1) seeks to prevent an execution that would otherwise be handled under the CEE procedures.

The Exchange became operational on August 28, 2020.[5] However, the automated processes to set the Order Collar price range pursuant to Rule 11.190(f)(1) were not yet fully operational at that time, and the Exchange temporarily suspended Rule 11.190(f)(1) until September 8, 2020.[6] It is anticipated that the automated processes will still not be fully operational on September 8, 2020. Therefore, to ensure the Exchange operates in conformity with its Rule Book, the Exchange proposes to continue suspending Rule 11.190(f)(1) until October 8, 2020, pending further systems development work. The Exchange will continue to work diligently to finalize the implementation of the Order Collar price range as described in Rule 11.190(f)(1). The Exchange previously issued a Regulatory Information Circular alerting its Members of the prior delay until September 8, 2020,[7] and will promptly issue a new Regulatory Information Circular regarding the continued suspension of Rule 11.190(f)(1).

2. Statutory Basis

The Exchange believes that the proposed rule change is consistent with the provisions of Section 6 of the Act,[8] in general, and furthers the objectives of Section 6(b)(5) of the Act,[9] in particular, in that it is designed to prevent fraudulent and manipulative acts and practices, promote just and equitable principles of trade, to foster cooperation and coordination with persons engaged in facilitating transactions in securities, to remove impediments to and perfect the mechanism of a free and open market and a national market system and, in general, to protect investors and the public interest.

The Order Collar provisions of Rule 11.190(f)(1) are a prophylactic measure to prevent trade executions outside of certain price bands. The Exchange has in effect other provisions to address trade executions at prices outside of these price bands, such as Rule 11.270 (Clearly Erroneous Executions). Additionally, Rule 11.281 (Limit-Up Limit-Down) prevents trades in NMS Stocks from occurring outside specified price bands.[10] The Exchange further notes that other national securities exchanges operate without order price collars during their regular, continuous market trading sessions.[11]

B. Self-Regulatory Organization's Statement on Burden on Competition

The Exchange does not believe that the proposed rule change will result in any burden on competition that is not necessary or appropriate in furtherance of the purposes of the Act. The proposed change is not designed to address any competitive issue, but rather would provide the public and market participants with clarity and certainty regarding the operations of the Exchange. Additionally, the proposed rule change would not be an inappropriate burden on intramarket

[25] 17 CFR 200.30–3(a)(12).

[1] 15 U.S.C. 78s(b)(1).

[2] 17 CFR 240.19b–4.

[3] Unless otherwise defined, capitalized terms are used herein as defined in the LTSE Rulebook.

[4] *See* LTSE Rule 11.270(f)(1)(D).

[5] *See LTSE Production Securities Phase-In Set for Friday, August 28,* LTSE (August 24, 2010), *available at https://assets.ctfassets.net/cchj2z2dcfyd/4Ul3ygPsrihSz4lpQnBThu/56a54c087891a5aa20152398bdb51cea/MA-2020-022__Reminder_Production_Securities_Launching_August_28_-_Google_Docs.pdf.*

[6] *See* Securities Exchange Act Release No. 89710 (August 28, 2020) (File No. SR–LTSE–2020–14).

[7] *See Notice of Rule Filing to Temporarily Suspend Rule 11.190(f)(1),* LTSE (Aug. 27, 2020), *available at https://assets.ctfassets.net/cchj2z2dcfyd/6l5zWem57DZ2zHHHUKQENo/114fd721fca7dd3812a1534110803114/RIC-2020-07.pdf.*

[8] 15 U.S.C. 78f.

[9] 15 U.S.C. 78f(b)(5).

[10] Rule 11.281 was adopted under the LULD Plan, *see* Securities Exchange Act Release No. 85623 (April 11, 2019), 84 FR 16086 (April 17, 2019), and is designed to prevent trades in NMS Stocks from occurring outside specified price bands, which are set at a percentage level above and below the average reference price of a security over the preceding five-minute period.

[11] *See, e.g.,* MEMX Rulebook (8.17.20), *available at https://info.memxtrading.com/wp-content/uploads/2020/08/MEMX-Rulebook-8.17.20.pdf;* Rulebook—The Nasdaq Stock Market, *available at https://listingcenter.nasdaq.com/rulebook/nasdaq/rules* (last accessed September 3, 2020).

competition as it would be applied equally to all Members. It also is not a burden on intermarket competition as other exchange similarly operate without order price collars.

C. Self-Regulatory Organization's Statement on Comments on the Proposed Rule Change Received From Members, Participants, or Others

Written comments were neither solicited nor received.

III. Date of Effectiveness of the Proposed Rule Change and Timing for Commission Action

Because the foregoing proposed rule change does not: (i) Significantly affect the protection of investors or the public interest; (ii) impose any significant burden on competition; and (iii) become operative for 30 days from the date on which it was filed, or such shorter time as the Commission may designate, it has become effective pursuant to Section 19(b)(3)(A) of the Act [12] and Rule 19b–4(f)(6) thereunder.[13]

A proposed rule change filed pursuant to Rule 19b–4(f)(6) under the Act [14] normally does not become operative for 30 days after the date of its filing. However, Rule 19b–4(f)(6)(iii) [15] permits the Commission to designate a shorter time if such action is consistent with the protection of investors and the public interest. The Exchange has asked the Commission to waive the 30-day operative delay so that the proposed rule change may become operative immediately. According to the Exchange, waiver of the 30-day operative delay will allow the suspension to remain in effect while the Exchange continues to pursue the necessary systems development work. The Exchange notes that operations of the Exchange will not change and Members are aware [16] and will continue to be aware that the Order Collar functionality is currently not being deployed. The Exchange believes that the proposed rule change does not significantly affect the protection of investors or the public interest or impose a significant burden on competition because it is designed to continue the suspension of a prophylactic rule and that the proposed rule change does not impose any burden on Members or market participants. The Commission believes that waiving the 30-day operative delay is consistent with the protection of investors and the public interest, as doing so will ensure that the rule change becomes operative before the date that the existing temporary suspension of Rule 11.190(f)(1) expires. Accordingly, the Commission hereby waives the operative delay and designates the proposed rule change operative upon filing.[17]

At any time within 60 days of the filing of the proposed rule change, the Commission summarily may temporarily suspend such rule change if it appears to the Commission that such action is necessary or appropriate in the public interest, for the protection of investors, or otherwise in furtherance of the purposes of the Act. If the Commission takes such action, the Commission shall institute proceedings to determine whether the proposed rule change should be approved or disapproved.

IV. Solicitation of Comments

Interested persons are invited to submit written data, views, and arguments concerning the foregoing, including whether the proposed rule change is consistent with the Act. Comments may be submitted by any of the following methods:

Electronic Comments

- Use the Commission's internet comment form (*http://www.sec.gov/rules/sro.shtml*); or
- Send an email to *rule-comments@sec.gov.* Please include File Number SR–LTSE–2020–15 on the subject line.

Paper Comments

- Send paper comments in triplicate to Secretary, Securities and Exchange Commission, 100 F Street NE, Washington, DC 20549–1090.

All submissions should refer to File Number SR–LTSE–2020–15. This file number should be included on the subject line if email is used. To help the Commission process and review your comments more efficiently, please use only one method. The Commission will post all comments on the Commission's internet website (*http://www.sec.gov/rules/sro.shtml*). Copies of the submission, all subsequent amendments, all written statements with respect to the proposed rule change that are filed with the Commission, and all written communications relating to the proposed rule change between the Commission and any person, other than those that may be withheld from the public in accordance with the provisions of 5 U.S.C. 552, will be available for website viewing and printing in the Commission's Public Reference Room, 100 F Street NE, Washington, DC 20549 on official business days between the hours of 10:00 a.m. and 3:00 p.m. Copies of the filing also will be available for inspection and copying at the principal office of the Exchange. All comments received will be posted without change. Persons submitting comments are cautioned that we do not redact or edit personal identifying information from comment submissions. You should submit only information that you wish to make available publicly. All submissions should refer to File Number SR–LTSE–2020–15 and should be submitted on or before October 1, 2020.

For the Commission, by the Division of Trading and Markets, pursuant to delegated authority.[18]

J. Matthew DeLesDernier,

Assistant Secretary.

[FR Doc. 2020–19945 Filed 9–9–20; 8:45 am]

BILLING CODE 8011–01–P

[12] 15 U.S.C. 78s(b)(3)(A).

[13] 17 CFR 240.19b–4(f)(6). In addition, Rule 19b–4(f)(6)(iii) requires a self-regulatory organization to give the Commission written notice of its intent to file the proposed rule change, along with a brief description and text of the proposed rule change, at least five business days prior to the date of filing of the proposed rule change, or such shorter time as designated by the Commission. The Commission has waived the five business day notification requirement for this proposed rule change.

[14] 17 CFR 240.19b–4(f)(6).

[15] 17 CFR 240.19b–4(f)(6)(iii).

[16] *See supra* note 6.

[17] For purposes only of waiving the 30-day operative delay, the Commission also has considered the proposed rule's impact on efficiency, competition, and capital formation. *See* 15 U.S.C. 78c(f).

[18] 17 CFR 200.30–3(a)(12).

SECURITIES AND EXCHANGE COMMISSION

[Release No. 34–89771; File No. SR–MIAX–2020–28]

Self-Regulatory Organizations; Miami International Securities Exchange LLC; Notice of Filing and Immediate Effectiveness of a Proposed Rule Change To Amend Its Fee Schedule

September 4, 2020.

Pursuant to Section 19(b)(1) of the Securities Exchange Act of 1934 (''Act'') [1] and Rule 19b–4 thereunder,[2] notice is hereby given that on August 25, 2020, Miami International Securities Exchange LLC (''MIAX Options'' or ''Exchange'') filed with the Securities and Exchange Commission (''Commission'') a proposed rule change as described in Items I, II, and III below, which Items have been prepared by the Exchange. The Commission is publishing this notice to solicit

[1] 15 U.S.C. 78s(b)(1).

[2] 17 CFR 240.19b–4.

comments on the proposed rule change from interested persons.

I. Self-Regulatory Organization's Statement of the Terms of Substance of the Proposed Rule Change

The Exchange is filing a proposal to amend the MIAX Options Fee Schedule (the ''Fee Schedule'').

The text of the proposed rule change is available on the Exchange's website at *http://www.miaxoptions.com/rule-filings,* at MIAX's principal office, and at the Commission's Public Reference Room.

II. Self-Regulatory Organization's Statement of the Purpose of, and Statutory Basis for, the Proposed Rule Change

In its filing with the Commission, the Exchange included statements concerning the purpose of and basis for the proposed rule change and discussed any comments it received on the proposed rule change. The text of these statements may be examined at the places specified in Item IV below. The Exchange has prepared summaries, set forth in sections A, B, and C below, of the most significant aspects of such statements.

A. Self-Regulatory Organization's Statement of the Purpose of, and Statutory Basis for, the Proposed Rule Change

1. Purpose

The Exchange proposes to amend the Fee Schedule to extend the cap waiver of 1,000 contracts per leg for complex PRIME (''cPRIME'') [3] Agency Order rebates for all tiers under the Priority Customer Rebate Program (''PCRP'') [4] until December 31, 2020.

Background

Exchange Rule 518(b)(7) defines a cPRIME Order as a type of complex order [5] that is submitted for participation in a cPRIME Auction and trading of cPRIME Orders is governed by Rule 515A, Interpretation and Policy .12.[6] cPRIME Orders are processed and executed in the Exchange's PRIME mechanism, the same mechanism that the Exchange uses to process and execute simple PRIME orders, pursuant to Exchange Rule 515A.[7] PRIME is a process by which a Member may electronically submit for execution an order it represents as agent (an ''Agency Order'') against principal interest and/or solicited interest. The Member that submits the Agency Order (''Initiating Member'') agrees to guarantee the execution of the Agency Order by submitting a contra-side order representing principal interest or solicited interest (''Contra-Side Order''). When the Exchange receives a properly designated Agency Order for Auction processing, a request for response (''RFR'') detailing the option, side, size and initiating price is broadcasted to MIAX participants up to an optional designated limit price. Members may submit responses to the RFR, which can be either an Auction or Cancel (''AOC'') order or an AOC eQuote. A cPRIME Auction is the price-improvement mechanism of the Exchange's System pursuant to which an Initiating Member electronically submits a complex Agency Order into a cPRIME Auction. The Initiating Member, in submitting an Agency Order, must be willing to either (i) cross the Agency Order at a single price against principal or solicited interest, or (ii) automatically match against principal or solicited interest, the price and size of a RFR that is broadcast to MIAX participants up to an optional designated limit price. Such responses are defined as cPRIME AOC Responses or cPRIME eQuotes. The PRIME mechanism is used for orders on the Exchange's Simple Order Book.[8] The cPRIME mechanism is used for Complex Orders [9] on the Exchange's Strategy Book,[10] with the cPRIME mechanism operating in the same manner for processing and execution of cPRIME Orders that is used for PRIME Orders on the Simple Order Book.

The Exchange proposes to amend footnote ''*'' in Section 1)a)iii) of the Fee Schedule to extend the waiver of the contracts cap per leg for cPRIME Agency Order rebates for all tiers under the PCRP until December 31, 2020. Prior to a rule filing by the Exchange (described below), the Exchange limited the cPRIME Agency Order Credit to be payable only to the first 1,000 contracts per leg for each cPRIME Agency Order in all tiers under the PCRP. On February 28, 2020, the Exchange filed, and the Commission approved, the Exchange's proposal to waive the 1,000 contracts cap per leg for cPRIME Agency Order rebates for all tiers under the PCRP from March 1, 2020 until May 31, 2020.[11]

On May 29, 2020, the Exchange filed, and the Commission approved, the Exchange's proposal to extend the waiver of the 1,000 contracts cap per leg for cPRIME Agency Order rebates for all tiers under the PCRP from June 1, 2020 until July 31, 2020.[12] On July 31, 2020,

[3] ''cPRIME'' is the process by which a Member may electronically submit a ''cPRIME Order'' (as defined in Rule 518(b)(7)) it represents as agent (a ''cPRIME Agency Order'') against principal or solicited interest for execution (a ''cPRIME Auction''), subject to the restrictions set forth in Exchange Rule 515A, Interpretation and Policy .12. *See* Exchange Rule 515A.

[4] Under the PCRP, MIAX credits each Member the per contract amount resulting from each Priority Customer order transmitted by that Member which is executed electronically on the Exchange in all multiply-listed option classes (excluding, in simple or complex as applicable, QCC and cQCC Orders, mini-options, Priority Customer-to-Priority Customer Orders, C2C and cC2C Orders, PRIME and cPRIME AOC Responses, PRIME and cPRIME Contra-side Orders, PRIME and cPRIME Orders for which both the Agency and Contra-side Order are Priority Customers, and executions related to contracts that are routed to one or more exchanges in connection with the Options Order Protection and Locked/Crossed Market Plan referenced in Exchange Rule 1400), provided the Member meets certain percentage thresholds in a month as described in the PCRP table. *See* Fee Schedule, Section 1)a)iii. ''Priority Customer'' means a person or entity that (i) is not a broker or dealer in securities, and (ii) does not place more than 390 orders in listed options per day on average during a calendar month for its own beneficial accounts(s). A ''Priority Customer Order'' means an order for the account of a Priority Customer. *See* Exchange Rule 100.

[5] A ''complex order'' is any order involving the concurrent purchase and/or sale of two or more different options in the same underlying security (the ''legs'' or ''components'' of the complex order), for the same account, in a ratio that is equal to or greater than one-to-three (.333) and less than or equal to three-to-one (3.00) and for the purposes of executing a particular investment strategy. A complex order can also be a ''stock-option'' order, which is an order to buy or sell a stated number of units of an underlying security coupled with the purchase or sale of options contract(s) on the opposite side of the market, subject to certain contingencies set forth in the proposed rules governing complex orders. For a complete definition of a ''complex order,'' *see* Exchange Rule 518(a)(5). *See also* Securities Exchange Act Release No. 78620 (August 18, 2016), 81 FR 58770 (August 25, 2016) (SR–MIAX–2016–26).

[6] *See* Securities Exchange Act Release No. 81131 (July 12, 2017), 82 FR 32900 (July 18, 2017) (SR–MIAX–2017–19) (Order Granting Approval of a Proposed Rule Change to Amend MIAX Options Rules 515, Execution of Orders and Quotes; 515A, MIAX Price Improvement Mechanism (''PRIME'') and PRIME Solicitation Mechanism; and 518, Complex Orders).

[7] *Id.*

[8] The ''Simple Order Book'' is the Exchange's regular electronic book of orders and quotes. *See* Exchange Rule 518(a)(15).

[9] A ''complex order'' is any order involving the concurrent purchase and/or sale of two or more different options in the same underlying security (the ''legs'' or ''components'' of the complex order), for the same account, in a ratio that is equal to or greater than one-to-three (.333) and less than or equal to three-to-one (3.00) and for the purposes of executing a particular investment strategy. Mini-options may only be part of a complex order that includes other mini-options. Only those complex orders in the classes designated by the Exchange and communicated to Members via Regulatory Circular with no more than the applicable number of legs, as determined by the Exchange on a class-by-class basis and communicated to Members via Regulatory Circular, are eligible for processing. *See* Exchange Rule 518(a)(5).

[10] The ''Strategy Book'' is the Exchange's electronic book of complex orders and complex quotes. *See* Exchange Rule 518(a)(17).

[11] *See* Securities Exchange Act Release No. 88349 (March 10, 2020), 85 FR 14995 (March 15, 2020) (SR–MIAX–2020–05).

[12] *See* Securities Exchange Act Release No. 89035 (June 9, 2020), 85 FR 36249 (June 15, 2020) (SR–MIAX–2020–12).

the Exchange filed, and the Commission approved, the Exchange's proposal to extend the waiver of the 1,000 contracts cap per leg for cPRIME Agency Order rebates for all tiers under the PCRP from August 1, 2020 until August 31, 2020.[13] The Exchange now proposes to extend the cap waiver of 1,000 contracts per leg for cPRIME Agency Order rebates for all tiers under the PCRP until December 31, 2020. The purpose of this proposed change is for business and competitive reasons and to continue to entice market participants to submit larger-sized cPRIME Agency Orders.

The Commission has repeatedly expressed its preference for competition over regulatory intervention in determining prices, products, and services in the securities markets. In Regulation NMS, the Commission highlighted the importance of market forces in determining prices and self-regulatory organization (''SRO'') revenues and, also, recognized that current regulation of the market system ''has been remarkably successful in promoting market competition in its broader forms that are most important to investors and listed companies.'' [14] There are currently 16 registered options exchanges competing for order flow. Based on publicly-available information, and excluding index-based options, no single exchange had more than approximately 14% of the market share of executed volume of multiply-listed equity options trades for the month of July 2020.[15] Therefore, no exchange possesses significant pricing power in the execution of multiply-listed equity options order flow. More specifically, for the month of July 2020, the Exchange had a total market share of 4.85% of all equity options volume.[16]

The Exchange believes that the ever-shifting market shares among the exchanges from month to month demonstrates that market participants can shift order flow (as further described below), or discontinue or reduce use of certain categories of products, in response to transaction and non-transaction fee changes. For example, on March 1, 2019, the Exchange filed with the Commission an immediately effective filing to decrease certain credits assessable to Members pursuant to the PCRP.[17] The Exchange experienced a decrease in total market share between the months of February and March of 2019. Accordingly, the Exchange believes that the March 1, 2019 fee change may have contributed to the decrease in the Exchange's market share and, as such, the Exchange believes competitive forces constrain options exchange transaction and non-transaction fees.

2. Statutory Basis

The Exchange believes that its proposal to amend its Fee Schedule is consistent with Section 6(b) of the Act [18] in general, and furthers the objectives of Section 6(b)(4) of the Act [19] in particular, in that it is an equitable allocation of reasonable fees and other charges among its members and issuers and other persons using its facilities. The Exchange also believes the proposal furthers the objectives of Section 6(b)(5) of the Act in that it is designed to promote just and equitable principles of trade, to remove impediments to and perfect the mechanism of a free and open market and a national market system, and, in general to protect investors and the public interest and is not designed to permit unfair discrimination between customers, issuers, brokers and dealers.

The Exchange believes its proposal to extend the waiver of the cap of 1,000 contracts per leg for cPRIME Agency Order rebates for all tiers under the PCRP until December 31, 2020 provides for the equitable allocation of reasonable dues and fees and is not unfairly discriminatory for the following reasons. The Exchange operates in a highly competitive market. The Commission has repeatedly expressed its preference for competition over regulatory intervention in determining prices, products, and services in the securities markets. In Regulation NMS, the Commission highlighted the importance of market forces in determining prices and SRO revenues and, also, recognized that current regulation of the market system ''has been remarkably successful in promoting market competition in its broader forms that are most important to investors and listed companies.'' [20] There are currently 16 registered options exchanges competing for order flow. Based on publicly-available information, and excluding index-based options, no single exchange had more than approximately 14% of the market share of executed volume of multiply-listed equity options trades for the month of July 2020.[21] Therefore, no exchange possesses significant pricing power in the execution of multiply-listed equity and ETF options order flow. More specifically, for the month of July 2020, the Exchange had a total market share of 4.85% of all equity options volume.[22]

The Exchange believes that the ever-shifting market shares among the exchanges from month to month demonstrates that market participants can shift order flow, or discontinue or reduce use of certain categories of products, in response to transaction and/or non-transaction fee changes. For example, on March 1, 2019, the Exchange filed with the Commission an immediately effective filing to decrease certain credits assessable to Members pursuant to the PCRP.[23] The Exchange experienced a decrease in total market share between the months of February and March of 2019. Accordingly, the Exchange believes that the March 1, 2019 fee change may have contributed to the decrease in the Exchange's market share and, as such, the Exchange believes competitive forces constrain options exchange transaction and non-transaction fees and market participants can shift order flow based on fee changes instituted by the exchanges.

The Exchange believes that its proposal to continue to waive the 1,000 contracts cap per leg for cPRIME Agency Order rebates for all tiers in the PCRP until December 31, 2020 is reasonable, equitably allocated and not unfairly discriminatory because this change is for business and competitive reasons and available equally to all market participants. The Exchange cannot predict with certainty whether any market participant would submit additional cPRIME Agency Orders in excess of 1,000 contracts per leg in light of the proposal to continue to waive the cap of 1,000 contracts per leg for cPRIME Agency Order rebates for all tiers under the PCRP, but believes that market participants would continue to be encouraged to submit larger orders to obtain the additional credits. The Exchange believes that this proposed change would encourage increased cPRIME Agency Order flow, which will bring greater volume and liquidity to the Exchange, which benefits all market participants by providing more trading opportunities and tighter spreads.

[13] *See* Securities Exchange Act Release No. 89530 (August 12, 2020) (SR–MIAX–2020–26).

[14] *See* Securities Exchange Act Release No. 51808 (June 9, 2005), 70 FR 37496 (June 29, 2005).

[15] The OCC publishes options and futures volume in a variety of formats, including daily and monthly volume by exchange, available at: *https://www.theocc.com/market-data/volume/default.jsp.*

[16] *See id.*

[17] *See* Securities Exchange Act Release No. 85301 (March 13, 2019), 84 FR 10166 (March 19, 2019) (SR–MIAX–2019–09).

[18] 15 U.S.C. 78f(b).

[19] 15 U.S.C. 78f(b)(4) and (5).

[20] *See* Securities Exchange Act Release No. 51808 (June 9, 2005), 70 FR 37496 (June 29, 2005).

[21] *See supra* note 15.

[22] *See id.*

[23] *See supra* note 17.

B. Self-Regulatory Organization's Statement on Burden on Competition

In accordance with Section 6(b)(8) of the Act,[24] the Exchange believes that the proposed rule changes would not impose any burden on competition that are not necessary or appropriate in furtherance of the purposes of the Act. Instead, as discussed above, the Exchange believes that the proposed change would continue to encourage the submission of additional liquidity to a public exchange, thereby promoting market depth, price discovery and transparency and enhancing order execution opportunities for all market participants. As a result, the Exchange believes that the proposed change furthers the Commission's goal in adopting Regulation NMS of fostering integrated competition among orders.

The Exchange does not believe that other market participants at the Exchange would be placed at a relative disadvantage by the proposed change to continue to waive the cap of 1,000 contracts per leg for cPRIME Agency Order rebates for all tiers under the PCRP until December 31, 2020. The proposed change is designed to attract additional order flow to the Exchange. The Exchange believes that this proposal will continue to encourage Members to submit Priority Customer cPRIME Agency Orders, which will increase liquidity and benefit all market participants by providing more trading opportunities and tighter spreads. Accordingly, the Exchange believes that the proposed change will not impose any burden on competition not necessary or appropriate in furtherance of the purposes of the Act because it will continue to encourage order flow, which provides greater volume and liquidity, benefiting all market participants by providing more trading opportunities and tighter spreads.

The Exchange operates in a highly competitive market in which market participants can readily favor competing venues if they deem fee levels at a particular venue to be excessive. There are currently 16 registered options exchanges competing for order flow. Based on publicly-available information, and excluding index-based options, no single exchange has more than approximately 14% of the market share of executed volume of multiply-listed equity options trades for the month of July 2020.[25] Therefore, no exchange possesses significant pricing power in the execution of multiply-listed equity options order flow. More specifically, for the month of July 2020, the Exchange had a total market share of 4.85% of all equity options volume.[26] In such an environment, the Exchange must continually adjust its transaction and non-transaction fees to remain competitive with other exchanges and to attract order flow. The Exchange believes that the proposed rule change reflects this competitive environment because it continues to encourage market participants to provide and send order flow to the Exchange. To the extent this is achieved, all the Exchange's market participants should benefit from the improved market quality.

C. Self-Regulatory Organization's Statement on Comments on the Proposed Rule Change Received From Members, Participants, or Others

Written comments were neither solicited nor received.

III. Date of Effectiveness of the Proposed Rule Change and Timing for Commission Action

The foregoing rule change has become effective pursuant to Section 19(b)(3)(A)(ii) of the Act,[27] and Rule 19b–4(f)(2) [28] thereunder. At any time within 60 days of the filing of the proposed rule change, the Commission summarily may temporarily suspend such rule change if it appears to the Commission that such action is necessary or appropriate in the public interest, for the protection of investors, or otherwise in furtherance of the purposes of the Act. If the Commission takes such action, the Commission shall institute proceedings to determine whether the proposed rule should be approved or disapproved.

IV. Solicitation of Comments

Interested persons are invited to submit written data, views, and arguments concerning the foregoing, including whether the proposed rule change is consistent with the Act. Comments may be submitted by any of the following methods:

Electronic Comments

- Use the Commission's internet comment form (*http://www.sec.gov/rules/sro.shtml*); or
- Send an email to *rule-comments@sec.gov.* Please include File Number SR–MIAX–2020–28 on the subject line.

Paper Comments

- Send paper comments in triplicate to Secretary, Securities and Exchange Commission, 100 F Street NE, Washington, DC 20549–1090.

All submissions should refer to File Number SR–MIAX–2020–28. This file number should be included on the subject line if email is used. To help the Commission process and review your comments more efficiently, please use only one method. The Commission will post all comments on the Commission's internet website (*http://www.sec.gov/rules/sro.shtml*). Copies of the submission, all subsequent amendments, all written statements with respect to the proposed rule change that are filed with the Commission, and all written communications relating to the proposed rule change between the Commission and any person, other than those that may be withheld from the public in accordance with the provisions of 5 U.S.C. 552, will be available for website viewing and printing in the Commission's Public Reference Room, 100 F Street NE, Washington, DC 20549, on official business days between the hours of 10:00 a.m. and 3:00 p.m. Copies of the filing also will be available for inspection and copying at the principal office of the Exchange. All comments received will be posted without change. Persons submitting comments are cautioned that we do not redact or edit personal identifying information from comment submissions. You should submit only information that you wish to make available publicly. All submissions should refer to File Number SR–MIAX–2020–28 and should be submitted on or before October 1, 2020.

For the Commission, by the Division of Trading and Markets, pursuant to delegated authority.[29]

J. Matthew DeLesDernier,

Assistant Secretary.

[FR Doc. 2020–20025 Filed 9–9–20; 8:45 am]

BILLING CODE 8011–01–P

[24] 15 U.S.C. 78f(b)(8).

[25] *See supra* note 15.

[26] *See id.*

[27] 15 U.S.C. 78s(b)(3)(A)(ii).

[28] 17 CFR 240.19b–4(f)(2).

[29] 17 CFR 200.30–3(a)(12).

SECURITIES AND EXCHANGE COMMISSION

[Release No. 34–89759; File No. SR–BX–2020–023]

Self-Regulatory Organizations; Nasdaq BX, Inc.; Notice of Filing and Immediate Effectiveness of Proposed Rule Change To Amend Its Rules in Connection With a Technology Migration To Enhanced Nasdaq, Inc. Functionality

September 3, 2020.

Pursuant to Section 19(b)(1) of the Securities Exchange Act of 1934 (''Act''),[1] and Rule 19b–4 thereunder,[2] notice is hereby given that on August 21, 2020, Nasdaq BX, Inc. (''BX'' or ''Exchange'') filed with the Securities and Exchange Commission (''SEC'' or ''Commission'') the proposed rule change as described in Items I and II, below, which Items have been prepared by the Exchange. The Commission is publishing this notice to solicit comments on the proposed rule change from interested persons.

I. Self-Regulatory Organization's Statement of the Terms of Substance of the Proposed Rule Change

The Exchange proposes to amend its rules in connection with a technology migration to enhanced Nasdaq, Inc. (''Nasdaq'') functionality. Each change is discussed below.

The text of the proposed rule change is available on the Exchange's website at *https://listingcenter.nasdaq.com/rulebook/bx/rules,* at the principal office of the Exchange, and at the Commission's Public Reference Room.

II. Self-Regulatory Organization's Statement of the Purpose of, and Statutory Basis for, the Proposed Rule Change

In its filing with the Commission, the Exchange included statements concerning the purpose of and basis for the proposed rule change and discussed any comments it received on the proposed rule change. The text of these statements may be examined at the places specified in Item IV below. The Exchange has prepared summaries, set forth in sections A, B, and C below, of the most significant aspects of such statements.

[1] 15 U.S.C. 78s(b)(1).

[2] 17 CFR 240.19b–4.

A. Self-Regulatory Organization's Statement of the Purpose of, and Statutory Basis for, the Proposed Rule Change

1. Purpose

The Exchange proposes in Options 3 (Options Trading Rules) to amend Section 7 (Types of Orders and Order and Quote Protocols) and Section 15 (Risk Protections), and to adopt new Section 11 titled ''Auction Mechanisms'' and new Section 28 titled ''Optional Risk Protections,'' each in connection with a technology migration to enhanced Nasdaq functionality, which will result in higher performance, scalability, and more robust architecture. With this system migration, the Exchange intends to adopt certain trading functionality currently utilized at affiliated Nasdaq exchanges or other options exchanges.

The Exchange intends to begin implementation of the proposed rule change on September 14, 2020. The Exchange will issue an Options Trader Alert to Participants to provide notification of the symbols that will migrate, the relevant milestones, and operative dates for specific functionalities.

Block Order Mechanism

The Exchange proposes to adopt a new Block Order Mechanism in Options 3, Section 11, which will be entitled ''Auction Mechanisms.'' The proposed mechanism will provide a means for handling ''block-sized orders'' (*i.e.,* orders for fifty (50) contracts or more) on BX, and will be materially identical to the Block Order Mechanism currently offered by the Exchange's affiliate, Nasdaq ISE (''ISE'').

Specifically, proposed Options 3, Section 11(a) will state that the Block Order Mechanism is a process by which a Participant can obtain liquidity for the execution of block-size orders (''Block Order''). The Block Order Mechanism is for single leg transactions only. As discussed above, the Rule will further define block-size orders as orders for fifty (50) contracts or more. These provisions are consistent with ISE Options 3, Section 11(a).

Proposed subparagraph (a)(1) of Options 3, Section 11 will provide that upon entry of an order into the Block Order Mechanism, a broadcast message will be sent that includes the series, and may include price, size and/or size, as specified by the Participant entering the Block Order, and Participants will be given an opportunity to enter Responses with the prices and sizes at which they would be willing to trade with the Block Order.[3] This is similar to ISE's process in ISE Options 3, Section 11(a)(1). The Exchange also proposes to add similar definitions of ''broadcast message'' and ''Response'' within the Rule. Specifically, for purposes of the Rule, a broadcast message will mean an electronic message that is sent by the Exchange to all Participants, and a Response means an electronic message that is sent by Participants in response to a broadcast message. Also for purposes of the Rule, the time given to Participants to enter Responses for any of the below auction mechanisms shall be designated by the Exchange via an Options Trader Alert, but no less than 100 milliseconds and no more than 1 second.[4]

Proposed subparagraph (a)(2) will provide that at the conclusion of the time given to Participants to enter Responses, either an execution will occur automatically, or the Block Order will be cancelled. Proposed subparagraph (a)(2)(A) will explain the price at which orders entered into the Block Order Mechanism are executed. Specifically, Responses, orders, and quotes will be executed at a single block execution price that is the price for the Block Order at which the maximum number of contracts can be executed consistent with the Participant's instruction. Bids (offers) on the Exchange at the time the Block Order is executed that are priced higher (lower) than the block execution price, as well as Responses that are priced higher (lower) than the block execution price, will be executed in full at the block execution price up to the size of the Block Order. This is functionally identical to how ISE's block orders are priced at execution pursuant to ISE Options 3, Section 11(a)(2)(A).[5]

Proposed subparagraph (a)(2)(B) will describe the proposed auction allocation methodology. The proposed allocation for block auctions will follow a Size Pro-Rata[6] methodology that prioritizes

[3] The Exchange notes that similar to current ISE functionality, the proposed functionality on BX will allow all Participants, except for the initiating Participant, to respond to the block auction.

[4] *See* proposed Options 3, Section 11. *See also* ISE Options 3, Section 11.

[5] While the existing ISE Block rule does not contain the ''up to the size of the Block Order'' language, this is being added to the BX Block rule to make clear that better priced interest gets executed in full only if there is sufficient size to execute against such interest. This is identical to how ISE Block Orders are executed and priced today.

[6] The Exchange is amending the definition of Size Pro-Rata within Options 3, Section 10(a)(1)(B) in a concurrent filing. As amended, Size Pro-Rata will mean that the System shall execute trading interest within the System in price priority, meaning it will

Continued

Public Customers,[7] similar to the Public Customer Size Pro-Rata allocation process for the BX's Price Improvement Auction (''PRISM''), except PRISM as a paired auction also allocates contracts against the contra order.[8] This is also similar to how Size Pro-Rata allocation normally takes place pursuant to Options 3, Section 10 for interest on the Exchange's order book.[9] As proposed, at the block execution price, Public Customer Orders and Public Customer Responses will be executed first in price time priority, and then quotes, non-Public Customer Orders, and non-Public Customer Responses will participate in the execution of the Block Order based upon the percentage of the total number of contracts available at the block execution price that is represented by the size of the quote, non-Public Customer Order, or non-Public Customer Response. This is functionally identical to ISE's block auction allocation methodology.[10] Similar to ISE, the proposed Block Order Mechanism is designed to provide an opportunity for Participants to receive liquidity for their Block Orders, and will therefore trade at a price that allows the maximum number of contracts of the Block Order to be executed against both Responses entered to trade against the order and unrelated interest on the Exchange's order book.

For example, if a Participant enters a Block Order to buy 100 contracts at $1.00 into the Block Order Mechanism, and Participants enter Response A to sell 50 contracts at $0.90 and Response B to sell 40 contracts at $0.95, the block execution price would be $0.95 as this is the price at which the maximum number of contracts could be executed. The Block Order and both Responses would then be executed at this single block execution price. Responses A and B would be executed in full since there is sufficient size to execute both Responses against the Block Order. In addition, if two other Participants also enter Responses C (Public Customer) and D (non-Public Customer) to sell at $0.98 for 10 contracts each, the block execution price would be $0.98 as additional contracts could be executed at that price. In that instance, Responses A and B, which are priced better than the block execution price, would be executed in full, while Responses C and D, which are priced at the block execution price, would participate in accordance with the allocation methodology described in the proposed rule—*i.e.,* the remaining 10 contracts would go to Response C, which is the Public Customer Response.

The Exchange proposes in subparagraph (a)(3) that if a trading halt is initiated after an order is entered into the Block Order Mechanism, such auction will be automatically terminated without execution. This mirrors ISE Options 3, Section 11(a)(3). Lastly, the Exchange proposes to amend Options 3, Section 7 to add Block Orders to the list of order types. As proposed, Options 3, Section 7(a)(12) will provide that a Block Order is an order entered into the Block Order Mechanism as described in Options 3, Section 11(a).[11] ISE Options 3, Section 7(v) similarly defines Block Order as an order type.

Order Price Protection

The Exchange proposes to amend its Order Price Protection (''OPP,'' also known as the fat finger check) in Options 3, Section 15(a)(1) to align certain features with the OPP functionality currently offered by its affiliate, The Nasdaq Options Market (''NOM''). The Exchange's proposal will introduce an alternative method to determine parameters for this risk protection. The Exchange notes that OPP is intended to prevent erroneous executions of orders on BX. This proposal seeks to further this objective by introducing a fixed dollar threshold that, in combination with the existing percentage threshold, will provide a modified approach to order rejection based on the price of the order.

The Exchange's current OPP feature prevents certain day limit, good til cancelled, and immediate or cancel orders at prices outside of pre-set standard limits from being accepted by the System. OPP applies to all options but currently does not apply to market orders or Intermarket Sweep Orders. OPP is operational each trading day after the opening until the close of trading, except during trading halts. OPP assists Participants in controlling risk by checking each order, before it is accepted into the System, against certain parameters. Today, as set forth in Options 3, Section 15(a)(1)(B), OPP rejects incoming orders that exceed certain parameters according to the following algorithm:

(i) If the better of the NBBO or the internal market BBO (the ''Reference BBO'') on the contra-side of an incoming order is greater than $1.00, orders with a limit more than 50% through such contra-side Reference BBO will be rejected by the System upon receipt.

(ii) If the Reference BBO on the contra-side of an incoming order is less than or equal to $1.00, orders with a limit more than 100% through such contra-side Reference BBO will be rejected by the System upon receipt.

The Exchange now proposes to expand the algorithm for OPP to introduce a fixed dollar threshold as an alternative to the percentage specified within the current rule. To effect this change, the Exchange proposes to amend Options 3, Section 15(a)(1)(B) to provide that OPP will reject incoming orders that exceed certain parameters according to the following algorithm:

(i) If the better of the NBBO or the internal market BBO (the ''Reference BBO'') on the contra-side of an incoming order is greater than $1.00, orders with a limit more than the greater of the below will cause the order to be rejected by the System upon receipt.

(A) 50% through such contra-side Reference BBO; or

(B) a configurable dollar amount not to exceed $1.00 through such contra-side Reference BBO as specified by the Exchange announced via an Options Trader Alert.

(ii) If the Reference BBO on the contra-side of an incoming order is less than or equal to $1.00, orders with a limit more than the greater of the below will cause the order to be rejected by the System upon receipt.

(A) 100% through such contra-side Reference BBO; or

(B) a configurable dollar amount not to exceed $1.00 through such contra-side Reference BBO as specified by the Exchange announced via an Options Trader Alert.

The proposed alternative would permit for a range of prices to be executed where the incoming order is up to $1.00 from the Reference BBO. The parameters are identical to NOM Options 3, Section 15(a)(1)(B). Similar to NOM, the Exchange believes that utilizing the greater of a fixed dollar amount or percentage would expand the

execute all trading interest at the best price level within the System before executing trading interest at the next best price. Within each price level, if there are two or more quotes or orders at the best price, trading interest will be executed based on the size of each Participant's quote or order as a percentage of the total size of all orders and quotes resting at that price. If the result is not a whole number, it will be rounded up to the nearest whole number. *See* Securities Exchange Act Release No. 89476 (August 4, 2020), 85 FR 48274 (August 10, 2020) (SR–BX–2020–017).

[7] The term ''Public Customer'' means a person that is not a broker or dealer in securities. *See* Options 1, Section 1(a)(49). The Exchange is also concurrently amending this rule to provide that a Public Customer is not a Professional as defined within the BX rules. *See* Securities Exchange Act Release No. 89476 (August 4, 2020), 85 FR 48274 (August 10, 2020) (SR–BX–2020–017).

[8] *See* Options 3, Section 13(ii)(E).

[9] *See* Options 3, Section 10(a)(1)(C)(2)(i).

[10] *See* ISE Options 3, Section 11(a)(2)(B). The reference to ''Professional'' interest in ISE's rule essentially means non-Priority Customer interest. *See* ISE Options 1, Section 1(a)(39), which defines a Professional Order as an order that is for the account of a person or entity that is not a Priority Customer.

[11] The Exchanges notes that it is concurrently amending Options 3, Section 7(a) in SR–BX–2020–017. The proposed changes herein to add Block Orders in Section 7(a) assumes the Section 7(a) rule changes in SR–BX–2020–017 are effective prior to the effectiveness of this filing.

applicability of OPP while still providing a reasonable limit to the range where orders will be accepted. By implementing a functionality that applies the greater of a fixed dollar amount not to exceed $1.00 or a percentage, the Exchange would ensure that this protection would be able to accommodate all orders based on a determination of how far from the Reference BBO the order is priced.

The Exchange notes that certain securities in lower price ranges would not benefit from the application of a percentage as would securities with higher prices. For instance, the application of a 50% threshold to a $50 security would provide a rejection if a limit order was priced $75 or greater compared to a 100% threshold for a $0.02 security which would be rejected if a limit order was priced $0.04 or greater. As such, certain orders could be rejected under the current framework because the percentage threshold is applied to the contra-side of an incoming order, including in cases where the order is not erroneously priced. Below are additional examples to illustrate the application of the current and proposed rule:

Example: An Option Priced Less Than $1.00

For a penny MPV option with a BBO on BX of $0.01 × $0.02, consider that the configurable dollar amount is set to $0.05.

Current Rule: Reject buy orders of more than $0.04 bid if incoming order was less than $1.00, and it was more than 100% through the contra-side of the Reference BBO.

Proposed Rule: A buy order priced up to $0.07 ($0.02 offer + $0.05 configuration) would not be rejected because a configurable dollar amount from $0.00 to $0.05 would allow the order to be entered into the System for execution.

This order was marketable upon entry and was not priced far from the current bid. The Exchange believes in this example, the order should be permitted to trade instead of being rejected.

Example: An Option Priced Greater Than $1.00

For a penny MPV option with a BBO on BX of $1.01 × $1.02, consider that the configurable dollar amount is set to $0.60

Current Rule: Reject buy orders 50% through $1.02—orders priced greater than $1.53 ($1.02 + $0.51).

Proposed Rule: Reject buy orders priced greater than $1.62—$0.60 through 1.02 (this would be greater than 50% through 1.02).

This order was marketable upon entry and was not priced far from the current bid. The Exchange believes in this example, the order should be permitted to trade instead of being rejected.

As the above examples illustrate, the Exchange believes that securities in the lower price range could benefit by the proposed alternative method because the fixed amount provides for additional executions in certain situations where a percentage would reject an order that was intentional and not erroneous. This approach has been successful for NOM in limiting erroneous executions while permitting intentional executions at reasonable prices, and the Exchange therefore proposes to adopt this approach for its options market as well. Similar to NOM, the Exchange will post the configurable amount on its website and announce any changes to the amount in an Options Trader Alert.

The Exchange also proposes to add language similar to NOM, which will provide the Exchange with discretion to temporarily deactivate OPP from time to time on an intra-day basis if it determined that unusual market conditions warranted deactivation in the interest of a fair and orderly market. Like NOM, the Exchange believes that it will be useful to have the flexibility to temporarily disable OPP intra-day in response to an unusual market event (for example, if dissemination of data was delayed and resulted in unreliable underlying values needed for the Reference BBO). Participants would be notified of intra-day OPP deactivation and any subsequent reactivation by the Exchange through the issuance of System status messages. Specifically, the Exchange proposes to add in Options 3, Section 15(a)(1)(A) that OPP may be temporarily deactivated on an intra-day basis at the Exchange's discretion.

Lastly, the Exchange proposes to amend Options 3, Section 15(a)(1) to remove the current exclusion of Intermarket Sweep Orders (''ISOs'') from the OPP rule. With the proposed amendment, OPP will apply to ISOs. The Exchange does not apply OPP to ISOs today because the intent of an ISO is to sweep as many prices as possible at the top of the book, so market participants need to cast as wide a net as possible to get those prices and fill the ISO. With the current OPP functionality, lower priced ISOs are more likely to get rejected for the reasons discussed above, and the Exchange determined at the time to exclude ISOs when adopting OPP. The proposal to add a fixed dollar threshold as an alternative OPP parameter, however, would provide more flexibility for more lower-priced options (including lower-priced ISOs) to get executed, and the Exchange therefore believes it is no longer necessary to exclude ISOs from OPP going forward. The Exchange further believes extending the protection to ISOs will promote the goal of limiting erroneous executions on the Exchange while permitting intentional executions at reasonable prices, and in general, extend more protections to ISOs.

Market Wide Risk Protection

The Exchange proposes to introduce new order entry and execution rate checks that are currently available on ISE.[12] The proposed risk protections will be substantially similar to the current risk protections on ISE except to account for certain functional differences relating to the ability of ISE's protections to apply cross-market across ISE and Nasdaq GEMX (''GEMX'').[13] These two new risk protections are designed to aid Participants in their order risk management by supplementing current price reasonability checks with activity based order protections.[14] The Exchange proposes to detail these risk protections in proposed Options 3, Section 15(a)(3), entitled ''Market Wide Risk Protection.''

Pursuant to the proposed Market Wide Risk Protection (''MWRP'') rule, the Exchange's trading system (''System'') will maintain one or more counting programs for each Participant that count orders entered and contracts traded on BX.[15] Participants can use multiple counting programs to separate risk protections for different groups established within the Participant. The counting programs will maintain separate counts, over rolling time periods specified by the Participant for each count, of: (1) The total number of orders entered in the order book; and (2) the total number of contracts traded.

All Participants must provide parameters for the order entry and execution rate protections as described in (1) and (2) above. While the MWRP is mandatory for all Participants, the Exchange is not proposing to establish minimum or maximum values for the

[12] *See* ISE Options 3, Section 15(a)(1)(C).

[13] The Exchange also notes that ISE's current functionality applies to complex orders, which BX does not offer today.

[14] The Exchange currently provides Participants with price protections for orders such as the OPP and the Market Order Spread Protection, which prevent limit orders and market orders from being executed at far away and potentially erroneous prices.

[15] Unlike ISE's MWRP, which may apply cross-market across ISE and GEMX, the MWRP on BX will not apply cross-market to other affiliated exchanges.

order entry and execution parameters described above. The Exchange believes that this approach will give Participants the flexibility needed to appropriately tailor the MWRP to their respective risk management needs. In this regard, the Exchange notes that each Participant is in the best position to determine risk settings appropriate for their firm based on the Participant's trading activity and business needs. In the interest of maintaining a fair and orderly market, however, the Exchange will also establish default values for each of these parameters that apply to Participants that do not submit their own parameters for the MWRP, and will announce these default values in an Options Trader Alert to be distributed to Participants. The Exchange notes that this is consistent with ISE's approach on providing ISE members with the flexibility to establish their own MWRP order entry and execution rate parameters, as set forth in ISE Options 3, Section 15(a)(1)(C). The Exchanges also notes that similar to ISE, Participants will have the discretion to establish the applicable time period for each of the counts maintained under the proposed MWRP, provided that the selected time period must be within minimum and maximum duration of the applicable time period established by the Exchange and announced via an Options Trader Alert.[16]

Pursuant to proposed Options 3, Section 15(a)(3)(A)–(C), if, during the applicable time period, the Participant exceeds the thresholds that it has set for any of the order entry or execution counts described above on BX, the System will automatically reject all subsequent incoming orders entered by the Participant. Participants may also choose to have the System automatically cancel all of their existing orders on BX when the MWRP is triggered. The MWRP will remain engaged until the Participant manually notifies the Exchange to enable the acceptance of new orders. For Participants that still have open orders on the order book that have not been cancelled pursuant to proposed subparagraph (B), the System will continue to allow those Participants to interact with existing orders entered before the protection was triggered, including sending cancel order messages and receiving trade executions for those orders. The action taken in proposed subparagraphs (A)–(C) is similar to ISE Options 3, Section 15(a)(1)(C)(i)–(iii).

The Exchange believes that the proposed MWRP will assist Participants in better managing their risk when trading on BX. In particular, the proposed rule change provides functionality that allows Participants to set risk management thresholds for the number of orders or contracts executed on the Exchange during a specified period. As discussed above, this is similar to how ISE has implemented the MWRP on ISE, and the Exchange believes this functionality will likewise be beneficial for BX Participants.

The examples below illustrate how the MWRP would work both for order entry and order execution protections:

Example: Order Entry Rate Protection

Broker Dealer 1 (''BD1'') designates an allowable order rate of 499 orders/1 second.

@0 milliseconds, BD1 enters 200 orders. (Order total: 200 orders)
@450 milliseconds, BD1 enters 250 orders. (Order total: 450 orders)
@950 milliseconds, BD1 enters 50 orders. (Order total: 500 orders)

Market Wide Risk Protection is triggered on BX due to exceeding 499 orders in 1 second. All subsequent orders are rejected, and if BD1 has opted in to this functionality, all existing orders are cancelled. BD1 must contact the Exchange to resume trading.

Example: Order Execution Rate Protection

BD1 designates an allowable execution rate of 15,000 contracts/2 seconds.

@0 milliseconds, BD1 receives executions for 5,000 contracts. (Execution total: 5,000 contracts)
@600 milliseconds, BD1 receives executions for 10,000 contracts. (Execution total: 15,000 contracts)
@1550 milliseconds, BD1 receives executions for 2,000 contracts. (Execution total: 17,000 contracts)

Market Wide Risk Protection is triggered on BX due to exceeding 15,000 contracts in 2 seconds. All subsequent orders are rejected, and if BD1 has opted in to this functionality, all existing orders are cancelled. BD1 must contact the Exchange to resume trading.

Anti-Internalization

The Exchange proposes to enhance the anti-internalization (''AIQ'') functionality provided to Market Makers on the Exchange by giving Participants the flexibility to choose to have this protection apply at the Market Maker identifier level (*i.e.,* existing functionality), at the Exchange account level, or at the Participant firm level. The Exchange believes that this enhancement will provide helpful flexibility for Market Makers that wish to prevent trading against all quotes and orders entered by their firm, or Exchange account, instead of just quotes and orders that are entered under the same market participant identifier. Similar functionality is currently available on ISE pursuant to ISE Options 3, Section 15(a)(3)(A).

Currently, as provided in Options 3, Section 15(c)(1), the Exchange provides mandatory AIQ functionality that prevents Market Makers from trading against their own quotes and orders. In particular, quotes and orders entered by Market Makers using the same market participant identifier will not be executed against quotes and orders entered on the opposite side of the market by the same Market Maker using the same identifier. In such a case, the System cancels the oldest of the quotes or orders back to the entering party prior to execution. This functionality does not apply in any auction.

Today, this protection prevents Market Makers from trading against their own quotes and orders at the market participant identifier level. The proposed enhancement to this functionality would allow Participants to choose to have this protection applied at the market participant identifier level as implemented today, at the Exchange account level, or at the Participant firm level. If Participants choose to have this protection applied at the Exchange account level, AIQ would prevent quotes and orders from different market participant identifiers associated with the same Exchange account from trading against one another. Similarly, if the Participants choose to have this protection applied at the Participant firm level, AIQ would prohibit quotes and orders from different market participant identifiers within the Participant firm from trading against one another. The Exchange believes that the proposed AIQ enhancement will provide Participants with more tailored functionality that allows them to manage their trading as appropriate based on the Participants' business needs. While the Exchange believes that some firms may want to restrict AIQ to trading against interest from the same Market Maker identifier (*i.e.,* as implemented today), other firms may find it helpful to be able to configure AIQ to apply at the Exchange account level or at the Participant firm level so that they are protected regardless of which Market Maker identifier the order or quote originated from. ISE Options 3, Section 15(a)(3)(A) offers similar flexibility. Lastly, the Exchange proposes to clarify that AIQ does not apply during the opening process or

[16] *See* proposed Options 3, Section 15(a)(3). *See* also ISE Options 3, Section 15(a)(1)(C).

reopening process following a trading halt pursuant to Options 3, Section 8 to provide more specificity on how this functionality currently operates. The Exchange notes that the same procedures used during the opening process are used to reopen an option series after a trading halt, and therefore proposes to specify that AIQ will not apply during *an Opening Process* (*i.e.,* the opening and halt reopening process) in addition to an auction, as currently within the Rule.[17] AIQ is unnecessary during an Opening Process due to the high level of control that Market Makers exercise over their quotes during this process.

The examples below illustrate how AIQ would operate based on the market participant identifier level protection, the Exchange account level, or for Participants that choose to apply AIQ at the Participant firm level:

Example: Market Participant Identifier Level

Participant ABC (market participant identifiers 123A & 555B) with AIQ configured at the market participant identifier level.

123A Quote: $1.00 (5) × $1.10 (20)
555B Buy Order entered for 10 contracts at $1.10

555B Buy Order executes 10 contracts against 123A Quote. 123A and 555B are not prevented by the System from trading against one another because Participant ABC has configured AIQ to apply at the market participant identifier level. This is the same as existing functionality.

Example: Exchange Account Level

Participant ABC (Account 999 with market participant identifiers 123A and 555B, and Account 888 with market participant identifier 789A) with AIQ configured at the Exchange account level.

123A Quote: $1.00 (5) × $1.10 (20)
789A Quote: $1.05(10) × $1.10 (20)
555B Buy Order entered for 30 contracts at $1.10

555B Buy Order executes against 789A Quote but 555B Buy Order does not execute against 123A Quote. AIQ purges the 123A Quote and the remaining contracts of the 555B Buy Order rests on the book at $1.10. 123A and 555B are not permitted trade against one another because Participant ABC has configured AIQ to apply at the Exchange account level. This is new functionality as the Participant has opted to have AIQ operate at the Exchange account level.

Example: Participant Firm Level

Participant ABC (Account 999 with market participant identifiers 123A and 555B, and Account 888 with market participant identifier 789A) with AIQ configured at the Participant firm level.

123A Quote: $1.00 (5) × $1.10 (20)
789A Quote: $1.05(10) × $1.10 (20)
555B Buy Order entered for 30 contracts at $1.10

AIQ purges the 123A Quote and the 789A Quote and the 555B Buy Order rests on the book at $1.10. This is new functionality as the member has opted to have AIQ operate at the Participant firm level.

Quotation Adjustments

The Exchange proposes to amend Options 3, Section 15(c)(2), which sets forth the Exchange's ''Rapid Fire'' risk protection for quotes, to expand existing functionality by introducing optional Delta and Vega (as defined below) curtailment measures in addition to the current percentage-based and volume-based curtailments. The new curtailment measures will be functionally similar to the Delta and Vega thresholds currently offered by ISE pursuant to ISE Options 3, Section 15(a)(3)(B), except the Exchange will offer the new thresholds as optional risk protections.[18] In connection with this change, the Exchange also proposes to restructure its rules regarding Rapid Fire and ''Multi-Trigger'' risk protections to more closely align with the ISE's rule structure.[19] With the proposed changes, Rapid Fire and Multi-Trigger will be triggered only when a Market Maker exceeds its designated thresholds similar to ISE's approach, instead of when the thresholds are met or exceeded (as is currently the case).

Today, Rapid Fire is a risk protection that removes a Market Maker's quotes in all options series of an underlying security from the marketplace when certain designated percentage-based or volume-based thresholds are met or exceeded. Market Makers are required to utilize either the percentage-based threshold or the volume-based threshold.[20] The Exchange now proposes to introduce two optional thresholds which, in addition to the existing percentage-based and volume-based thresholds, will make up the suite of Rapid Fire thresholds that will be offered to Market Makers upon the technology migration. First, in new subparagraph (c)(2)(A)(iii) of Options 3, Section 15, the Exchange proposes to add:

(iii) Delta Threshold. A Market Maker may provide a Delta Threshold by which the System will automatically remove a Market Maker's quotes in all series of an options class. For each class of options, the System will maintain a Delta counter, which tracks the absolute value of the difference between (1) purchased call contracts plus sold put contracts and (2) sold call contracts plus purchased put contracts. If the Delta counter exceeds the Delta Threshold established by the Member, the System will automatically remove a Market Maker's quotes in all series of the options class.

The proposed rule text for Delta Threshold is identical to ISE Options 3, Section 15(a)(3)(B)(i)(c), except to indicate that the Exchange's threshold will be an optional feature.

Second, in new subparagraph (c)(2)(A)(iv) of Options 3, Section 15, the Exchange proposes to add:

(iv) Vega Threshold. A Market Maker may provide a Vega Threshold by which the System will automatically remove a Market Maker's quotes in all series of an options class. For each class of options, the System will maintain a Vega counter, which tracks the absolute value of purchased contracts minus sold contracts. If the Vega counter exceeds the Vega Threshold established by the Member, the System will automatically remove a Market Maker's quotes in all series of the options class.

The proposed rule text for Vega Threshold is identical to ISE Options 3, Section 15(a)(3)(B)(i)(d), except to indicate that the Exchange's threshold will be an optional feature.

With the proposed changes to add the Delta and Vega Thresholds described above, the Exchange also proposes to amend its Rapid Fire and Multi-Trigger rules to align the rule structure with ISE Options 3, Section 15(a)(3)(B). In restructuring these rules, the existing BX functionality will remain unchanged except with respect to when the Rapid Fire and Multi-Trigger thresholds will be triggered, and a minor change to the specified time period. Each will be discussed in more detail below.

To effect this change, the Exchange proposes to adopt new rule text in Options 3, Section 15(c)(2)(A), which will provide that Market Makers are required to utilize the Percentage Threshold or Volume Threshold. The Exchange will also replace each instance of ''Percentage-Based

[17] While ISE Options 3, Section 15(a)(3)(A) does not currently specify that ISE's AIQ would not apply during an Opening Process, the Exchange notes that ISE's functionality operates in the same manner today.

[18] The Delta and Vega thresholds on ISE are currently mandatory protections.

[19] As presently set forth in Options 3, Section 15(c)(2)(C), the Exchange's Multi-Trigger functionality removes Market Maker quotes in all options series in all underlying issues when a specified number of Rapid Fire thresholds are triggered over a chosen interval.

[20] *See* Options 3, Section 15(c)(2)(G). In contrast, the Multi-Trigger threshold is optional.

Threshold'' and ''Volume-Based Threshold'' with ''Percentage Threshold'' and ''Volume Threshold'' throughout Options 3, Section 15(c)(2) to align with ISE terminology. The Exchange further proposes to add that Market Makers may utilize the new Delta and Vega Thresholds to make clear that these thresholds are optional for Market Makers. As noted above, this is different from ISE's approach, which currently requires ISE Market Makers to utilize all four thresholds. The Exchange has determined not to make the new Delta and Vega Thresholds mandatory under this proposal, and will continue to require Market Makers to utilize either the Percentage or Volume Threshold.

For each of these features, the System will automatically remove a Market Maker's quotes in all series in an options class when any of the Percentage Threshold, Volume Threshold, Delta Threshold or Vega Threshold has been exceeded. As noted above, this is a change from current functionality where as amended, Rapid Fire will be triggered only when the Market Maker exceeds any of the designated thresholds. Currently, Rapid Fire is triggered when the designated thresholds are met or exceeded.[21] In addition, a Market Maker is required to specify a period of time not to exceed 30 seconds (''Specified Time Period'') during which the System will automatically remove a Market Maker's quotes in all series of an options class. This is another change from current functionality where today, the Specified Time Period established by the Market Maker for the Percentage and Volume Thresholds must not exceed 15 seconds.[22] The proposed changes on BX relating to when Rapid Fire will be triggered and the Specified Time Periods will align with ISE Options 3, Section 15(a)(3)(B)(i). By harmonizing BX's Rapid Fire rule to ISE's rule in this manner, the Exchange seeks to simplify the regulatory requirements and increase the understanding of the Exchange's operations related to Rapid Fire for market participants on BX that are also participants on ISE. The Exchange believes more consistent rules with its affiliated exchange will contribute to less complexity for market participants and more efficient regulatory compliance.

Otherwise, the new rule text in Options 3, Section 15(c)(2)(A) will not change existing Rapid Fire functionality. In particular, the Specified Time Period will commence for an options class every time an execution occurs in any series in such option class and will continue until the System removes quotes as described in the Rule or the Specified Time Period expires. The Specified Time Period operates on a rolling basis among all series in an options class in that there may be Specified Time Periods occurring simultaneously for each Threshold and such Specified Time Periods may overlap. The Specified Time Periods will be the same value for each of the Percentage Threshold, Volume Threshold, Delta Threshold, and Vega Threshold.[23]

The Exchange also proposes to replace the description of the existing Percentage Threshold in Options 3, Section 15(c)(2)(A) with new rule text in Options 3, Section 15(c)(2)(A)(i) as follows:

> (i) Percentage Threshold. A Market Maker must provide a specified percentage (''Percentage Threshold''), of not less than 1%, by which the System will automatically remove a Market Maker's quotes in all series of an options class. For each series in an options class, the System will determine (1) during a Specified Time Period and for each side in a given series, a percentage calculated by dividing the size of a Market Maker's quote size executed in a particular series (the numerator) by the Marker Maker's quote size available at the time of execution plus the total number of the Market Marker's quote size previously executed during the unexpired Specified Time Period (the denominator) (''Series Percentage''); and (2) the sum of the Series Percentage in the options class (''Issue Percentage'') during a Specified Time Period. The System tracks and calculates the net impact of positions in the same options class; long call percentages are offset by short call percentages, and long put percentages are offset by short put percentages in the Issue Percentage. If the Issue Percentage exceeds the Percentage Threshold the System will automatically remove a Market Maker's quotes in all series of the options class during the Specified Time Period.

With the proposed changes, the Percentage Threshold will be applied in the same manner as today, except with respect to the differences discussed above (*i.e.,* when the Percentage Threshold will be triggered and the threshold's Specified Time Period). The proposed rule text is identical to ISE Options 3, Section 15(a)(3)(B)(i)(a).

The Exchange also proposes to replace the description of the existing Volume Threshold in Options 3, Section 15(c)(2)(B) with new rule text in Options 3, Section 15(c)(2)(A)(ii) as follows:

> (ii) Volume Threshold. A Market Maker must provide a Volume Threshold by which the System will automatically remove a Market Maker's quotes in all series of an options class when the Market Maker executes a number of contracts which exceeds the designated number of contracts in all series in an options class.

With the proposed changes, the Volume Threshold will be applied in the same manner as today, except with respect to the differences discussed above (*i.e.,* when the Volume Threshold will be triggered and the threshold's Specified Time Period). The proposed rule text is identical to ISE Options 3, Section 15(a)(3)(B)(i)(b).

In connection with the foregoing changes, current Options 3, Section 15(c)(2)(C), which describes the Exchange's Multi-Trigger risk protection, will be renumbered to Section 15(c)(2)(B) and amended throughout to add the Delta and Vega Thresholds wherever the Rule references Percentage and Volume Thresholds. In addition, the Exchange proposes to amend the Multi-Trigger Specified Time Period from 15 seconds to 30 seconds to align with the Specified Time Periods proposed above. The Exchange further proposes in the Multi-Trigger rule to amend when Multi-Trigger will be triggered to align with the Rapid Fire changes proposed above. Specifically, the Exchange proposes to amend the provision, ''[o]nce the System determines that the number of triggers equals or exceeds a number . . .'' to instead state, ''[o]nce the System determines that the number of triggers *exceeds* a number . . .'' to make clear that Multi-Trigger will no longer remove Market Maker quotes when the Multi-Trigger threshold is met (and not exceeded).

Options 3, Section 15(c)(2)(D) (renumbered to Section 15(c)(2)(C)), which explains how the System purges quotes once the Rapid Fire and Multi-Trigger thresholds are triggered, will be amended to conform with the changes proposed above. In particular, the Exchange proposes conforming changes to add the Delta and Vega Thresholds wherever these provisions reference Percentage and Volume Thresholds, and to replace ''reached'' with ''exceeded'' in each instance where the language indicates that the Rapid Fire and Multi-Trigger thresholds have been reached.

Options 3, Section 15(c)(2)(E) (renumbered to Section 15(c)(2)(D)) will likewise be amended to add references to the Delta and Vega Thresholds, and will state that if a BX Market Maker requests the System to remove quotes in all options series in an underlying issue, the System will automatically reset the

[21] *See* Options 3, Section 15(c)(2)(A) and (B).

[22] *Id.*

[23] *See id.* for similar features in the current Percentage and Volume Thresholds.

Specified Time Period(s) for the Percentage, Volume, Delta, or Vega Threshold.[24] As is the case today, the Multi-Trigger Specified Time Period(s) will not automatically reset for the Multi-Trigger Threshold.

Options 3, Section 15(c)(2)(F) (renumbered to Section 15(c)(2)(E)), which sets forth the re-entry process once Rapid Fire and Multi-Trigger are triggered, the Exchange will likewise add references to the Delta and Vega Thresholds wherever the provision refers to the Percentage and Volume Thresholds. The Exchange also proposes a clarifying change in the first sentence to add, ''[w]hen the System removes quotes as a result of *exceeding* . . .'' in order to align with ISE Options 3, Section 15(a)(3)(B)(iv). The Exchange further proposes a non-substantive change in the first sentence to amend ''reentry'' to ''re-entry''.

Lastly, Options 3, Section 15(c)(2)(G) (renumbered to Section 15(c)(2)(F)), will be amended to specify that the Delta and Vega Thresholds, in addition to the Multi-Trigger Threshold, are optional.

The following are examples to illustrate how the proposed Delta and Vega Thresholds would apply on BX:

Example: Delta Threshold

MM1 has Delta Threshold set to 10 contracts
MM1 quotes IBM Call Option 2.55 (100) × 3.00 (1000)
FIX Order to Sell 11 @MKT trades with MM quote
Trade occurs for 11 @2.55, triggers Rapid Fire for MM1 since 11 calls purchased for MM1 > MM1's Delta Threshold of 10

Example: Vega Threshold

MM1 has Vega Threshold set to 10 contracts
MM1 quotes IBM Call Option 2.55 (100) × 3.00 (1000)
FIX Order to Sell 11 @MKT trades with MM quote
Trade occurs for 11 @2.55, triggers Rapid Fire for MM1 since 11 calls purchased for MM1 > MM1's Vega Threshold of 10

Notional Value Protections

The Exchange proposes to introduce optional notional value checks in new Options 3, Section 28, entitled ''Optional Risk Protections.'' Participants may use this voluntary functionality through their FIX[25] protocols to limit the quantity and notional value they can send per order and on aggregate for the day. Specifically, Participants may establish limits for the following parameters, as set forth in proposed subparagraphs (a)(1)–(4):

- Notional dollar value per order, which will be calculated as quantity multiplied by limit price multiplied by number of underlying shares;
- Aggregate notional dollar value;
- Quantity per order; and
- Aggregate quantity

Proposed paragraph (b) will provide that Participants may elect one or more of the above optional risk protections by contacting Market Operations and providing a per order and/or daily aggregate value for an order protection. Participants may modify their settings through Market Operations. Proposed paragraph (c) will provide that the System will reject all incoming aggregated Participant orders through FIX if the value configured by the Participant, for any of the above-referenced risk protections, is exceeded. Lastly, proposed paragraph (d) will specify that if a Participant sets a notional dollar value, a Market Order would not be accepted from that Participant as notional dollar value is calculated by using an order's specified limit price, and Market Orders by definition are priced at the best available price upon execution. The Exchange notes that similar notional value checks are currently offered as optional risk protections by other options markets.[26]

2. Statutory Basis

The Exchange believes that its proposal is consistent with Section 6(b) of the Act,[27] in general, and furthers the objectives of Section 6(b)(5) of the Act,[28] in particular, in that it is designed to promote just and equitable principles of trade, to remove impediments to and perfect the mechanism of a free and open market and a national market system, and, in general to protect investors and the public interest.

The Exchange's proposal is generally intended to add or align certain System functionality with functionality currently offered by ISE and NOM in order to provide a more consistent technology offering across affiliated Nasdaq exchanges. A more harmonized technology offering, in turn, will simplify the technology implementation, changes, and maintenance by market participants of BX that are also participants on Nasdaq affiliated exchanges. The Exchange's proposal will also provide market participants with access to optional notional risk protections that are available on other markets other than the Nasdaq affiliated exchanges, and may provide more efficient risk management and additional flexibility to the Exchange's System and its market participants. The proposed rule change seeks to provide greater harmonization between the rules of the Exchange and its affiliates, which would result in greater uniformity, and less burdensome and more efficient regulatory compliance by market participants. As such, the proposed rule change would foster cooperation and coordination with persons engaged in facilitating transactions in securities and would remove impediments to and perfect the mechanism of a free and open market and a national market system. The Exchange also believes that more consistent rules will increase the understanding of the Exchange's operations for Participants that are also participants on the Nasdaq affiliated exchanges, thereby contributing to the protection of investors and the public interest.

Block Order Mechanism

The Exchange believes that the proposed rule change to adopt the Block Order Mechanism will offer market participants with additional functionality for seeking out liquidity for larger-sized orders, which will provide greater flexibility in pricing such block-sized orders and may provide more opportunities for price improvement. The proposed auction is functionally identical to ISE's Block Order Mechanism. Similar to ISE, the proposed Block Order Mechanism will provide equal access to Block Orders for all market participants, as all Participants that subscribe to the Exchange's data feeds will have the opportunity to interact with Block Orders entered through this

[24] The Specified Time Period(s) will also be automatically reset if Rapid Fire is triggered (and the System automatically removes quotes).

[25] ''Financial Information eXchange'' or ''FIX'' is the Exchange's order entry protocol, and is defined as an interface that allows Participants and their Sponsored Customers to connect, send, and receive messages related to orders and auction orders and responses to and from the Exchange. Features include the following: (1) Execution messages; (2) order messages; and (3) risk protection triggers and cancel notifications. *See* Options 3, Section 7(d)(1)(A).

[26] For example, Cboe Options (''Cboe'') offers voluntary functionality that, if enabled by the user, provides that the Cboe trading system would cancel or reject an incoming order or quote with a notional value that exceeds the maximum notional value a user establishes for each of its ports. *See* Cboe Rule 5.34(c)(3). Cboe also offers voluntary functionality in which a user may establish risk limits defined by certain parameters, of which the notional value of executions is a parameter option. *See* Cboe Rule 5.34(c)(4).

[27] 15 U.S.C. 78f(b).

[28] 15 U.S.C. 78f(b)(5).

mechanism.[29] The proposed auction is intended to benefit investors because it is designed to provide investors seeking to execute any block-sized orders with opportunities to access additional liquidity and potentially receive price improvement. The proposed rule change may result in increased liquidity available at improved prices for Participants' orders. The Exchange believes that the Block Order Mechanism will promote and foster competition and provide more options contracts with the opportunity to seek liquidity and potential price improvement.

The Exchange believes that the proposed rule change will remove impediments to and perfect the mechanism of a free and open market and a national market system because the Block Order Mechanism will be functionally identical to the mechanism currently available on the ISE. The Exchange believes that the consistency will benefit investors by promoting a fair and orderly national options market system.

The Exchange believes that the proposed rule change will result in efficient trading and reduce the risk for investors that seek to access additional liquidity and potential price improvement for block-sized orders by providing additional opportunity to do so. The proposed priority and allocation rules for the Block Order Mechanism are similar to the Exchange's current customer priority size pro-rata allocation methodology that gives priority to Public Customer orders. The Exchange believes this will ensure a fair and orderly market by maintaining priority of orders and quotes and protecting Public Customer orders, while still affording the opportunity to seek liquidity and for potential price improvement during each Block auction commenced on the Exchange.

By keeping the priority and allocation rules for a Block auction similar to the standard allocation used on the Exchange, the proposed rule change will reduce the ability of market participants to misuse this mechanism to circumvent standard priority rules in a manner designed to prevent fraudulent and manipulative acts and practices, and to promote just and equitable principles of trade on the Exchange. The proposed execution and allocation rules will allow Block Orders to interact with interest on the Exchange's order book in an efficient and orderly manner. The Exchange believes this interaction of orders will benefit investors by increasing the opportunity for options orders to receive executions.

Order Price Protection

The Exchange believes that the proposed changes to OPP to introduce an alternative threshold that uses a configurable dollar amount, as discussed above, will allow BX to establish appropriate boundaries for rejecting potentially erroneous orders while continuing to allow Participants to access liquidity. As discussed above, OPP is intended to prevent orders entered at clearly unintended prices from executing in the System to the detriment of market participants. OPP was not intended to reject legitimate orders which are otherwise capable to execution at a fair price. The Exchange's proposal will establish a fixed dollar amount as an alternative threshold in addition to the current percentage-based threshold, similar to NOM Options 3, Section 15(a)(1). The Exchange believes its proposal will continue to protect investors and the public interest against erroneous executions while also allowing orders, including lower-priced orders, to execute where appropriate when the incoming order is $1.00 from the Reference BBO.

The Exchange believes that its proposal is consistent with the Act because the fixed amount provides for a larger range of executions within the $1.00 variance that would otherwise be rejected by the application of a percentage which would not capture the potential incremental executions. As illustrated above, orders could be rejected that were intentional and not erroneous. Similar to NOM, the Exchange believes that the proposed approach will accomplish the goal of limiting erroneous executions while permitting intentional executions at reasonable prices.

The Exchange also believes that its proposal to add rule text relating to Exchange discretion to temporarily deactivate OPP on an intra-day basis is consistent with the Act. As noted above, NOM has identical language in NOM Options 3, Section 15(a)(1)(A), and similar to NOM, the Exchange believes that having this discretion will be useful if the Exchange determined that unusual market conditions warranted deactivation in the interest of a fair and orderly market. Like NOM, the Exchange believes that it will be useful to have the flexibility to temporarily disable OPP intra-day in response to an unusual market event (for example, if dissemination of data was delayed and resulted in unreliable underlying values needed for the Reference BBO) to maintain a fair and orderly market. This will promote just and equitable principles of trade and ultimately protect investors.

Lastly, the proposed changes to remove the exclusion of ISOs so that OPP would apply to them going forward is consistent with the Act as this will promote the goal of limiting erroneous executions on the Exchange and in general, extend more protections to ISOs. As discussed above, the Exchange believes this is appropriate given that the proposed alternative threshold will permit more lower-priced ISOs to execute at reasonable prices.

Market Wide Risk Protection

The Exchange believes that the proposed rule change to adopt MWRP would assist with the maintenance of a fair and orderly market by establishing new activity based risk protections for orders. The proposed MWRP is similar to risk management functionality provided in ISE Options 3, Section 15(a)(1)(C). Similar to ISE, the Exchange believes that the proposed rule change may reduce Participant risk by allowing them to properly manage their exposure to excessive risk. In particular, the proposed rule change would implement two new risk protections based on the rate of order entry and order execution, respectively. The Exchange believes that both of these new protections, which together encompass the proposed MWRP, would enable Participants to better manage their risk when trading options on the Exchange by limiting the Participant's risk exposure when systems or other issues result in orders being entered or executed at a rate that exceeds predefined thresholds. In today's market, the Exchange believes that robust risk management is becoming increasingly more important for all Participants. The proposed rule change would provide an additional layer of risk protection for market participants that trade on the Exchange.

In particular, the MWRP is designed to reduce risk associated with system errors or market events that may cause Participants to send a large number of orders, or receive multiple, automatic executions, before they can adjust their exposure in the market. Without adequate risk management tools, such as those proposed in this filing, Participants could reduce the amount of order flow and liquidity that they provide. Such actions may undermine the quality of the markets available to

[29] Auction notifications will be disseminated through the BX Depth of Market (''BX Depth'') data feed. *See* Options 3, Section 23(a). The Exchange is amending this Rule to provide that BX Depth will also provide auction notifications. *See* Securities Exchange Act Release No. 89476 (August 4, 2020), 85 FR 48274 (August 10, 2020) (SR–BX–2020–017). Any Participant can subscribe to the options data disseminated through this feed and through all of the Exchange's other data feeds.

customers and other market participants. Accordingly, the proposed functionality is designed to encourage Participants to submit additional order flow and liquidity to the Exchange, thereby removing impediments to and perfect the mechanisms of a free and open market and a national market system and, in general, protecting investors and the public interest.

Anti-Internalization

The Exchange believes that the proposed rule change to enhance AIQ is consistent with the protection of investors and the public interest as it is designed to provide Market Makers with additional flexibility with respect to how to implement self-trade protections provided by AIQ. Currently, all Market Makers are provided functionality that prevents quotes and orders from one market participant identifier from trading with quotes and orders from the same market participant identifier. This allows Market Makers to better manage their order flow and prevent undesirable executions where the Market Maker, using the same market participant identifier, would be on both sides of the trade. While this functionality is helpful to Participants, some Participants may prefer not to trade with quotes and orders entered by different market participant identifiers within the same Exchange account or Participant firm. The Exchange is therefore proposing to provide Participants with flexibility with respect to how AIQ is implemented. As such, Participants can continue to use current functionality, or Participants that prefer to prevent self-trades across different market participant identifiers within the same Exchange account or at the Participant firm level will now be provided with the means to do so under this proposal. Similar flexibility is offered on ISE.[30] Similar to ISE, the Exchange believes that flexibility to apply AIQ at the Exchange account or Participant firm level would be useful for the Exchange's Participants as well. The Exchange believes that the proposed rule change is designed to promote just and equitable principles of trade and will remove impediments to and perfect the mechanisms of a free and open market as it will further enhance self-trade protections provided to Market Makers similar to those protections provided on other markets. Lastly, the Exchange believes its proposal to clarify that AIQ will not apply during an Opening Process is consistent with the Act as it would provide more specificity on how this functionality currently operates. As discussed above, AIQ is unnecessary during an Opening Process due to the high level of control that Market Makers exercise over their quotes during this process.

Quotation Adjustments

The Exchange believes that the proposed rule change is consistent with the Act because it will enhance the risk protection tools available to Market Makers by introducing new Delta and Vega Thresholds that will be offered in conjunction with the current Percentage and Volume Thresholds, thereby strengthening a Market Maker's ability to manage their risk on the Exchange. The proposed thresholds are functionally identical to the Delta and Vega Thresholds provided in ISE Options 3, Section 15(a)(3)(B). Similar to ISE, the Exchange believes that the proposed rule change may reduce Market Maker risk by allowing them to properly manage their exposure to excessive risk. Accordingly, the Exchange believes that the proposal removes impediments to, and perfects the mechanism of, a free and open market and a national market system, and protects investors and the public interest.

The proposed changes to amend when Rapid Fire and Multi-Trigger will be triggered and the modification to the Specified Time Periods, as discussed above, will bring greater harmonization between the Exchange's rules and ISE's rules. With the proposed changes, BX's Rapid Fire and Multi-Trigger will be triggered when their respective thresholds are exceeded (instead of when they are met or exceeded, as is currently the case) and the Specified Time Periods will be amended from 15 to 30 seconds, all of which will be substantially similar to ISE's current approach. The Exchange believes that having more consistent rules will result in greater uniformity as well as less burdensome and more efficient regulatory compliance. In addition, offering more consistent functionality across BX and ISE will contribute to less complexity and reduce potential confusion for market participants on BX that are also participants on ISE. As such, the Exchange believes that the proposed changes would foster cooperation and coordination with persons engaged in facilitating transactions in securities and would remove impediments to and perfect the mechanism of a free and open market and a national market system.

Notional Value Protections

The Exchange believes that introducing the optional notional value risk protections as described above will protect investors and the public interest, and maintain fair and orderly markets, by providing market participants with another tool to manage their order risk. As noted above, other options exchanges such as Cboe offer similar optional notional risk protections.[31] In addition, providing Participants with more tools for managing risk will facilitate transactions in securities because Participants will have more confidence that risk protections are in place. As a result, the new functionality has the potential to promote just and equitable principles of trade.

B. Self-Regulatory Organization's Statement on Burden on Competition

The Exchange does not believe that the proposed rule change will impose any burden on competition not necessary or appropriate in furtherance of the purposes of the Act.

The Exchange does not believe that the proposed rule change will impose any burden on intramarket competition that is not necessary or appropriate in furtherance of the purposes of the Act. As it relates to the proposed Block Order Mechanism, the proposed functionality is designed to increase competition for order flow on the Exchange in a manner intended to be beneficial to investors seeking to effect block-sized orders with an opportunity to access additional liquidity and potentially receive price improvement. The Exchange will offer this mechanism to all Participants, and use of the proposed functionality will be completely voluntary.

The Exchange further believes that all of the proposed changes related to the risk protections described above do not impose an undue burden on intramarket competition as they are all aimed at mitigating market participant risk associated with trading on the Exchange. The proposed changes are designed to benefit market participants in that they will provide a more consistent technology offering for market participants on Nasdaq affiliated exchanges. The Exchange also notes that some of the proposed risk controls (*e.g.,* Delta and Vega Thresholds, and notional value checks) are completely voluntary.

As it relates to inter-market competition, the Exchange notes that the basis for the majority of the proposed rule changes in this filing are

[30] *See* ISE Options 3, Section 15(a)(3)(A). *See also* NOM Options 3, Section 15(c)(1), which provides similar flexibility for NOM's AIQ.

[31] *See supra* note 26.

the rules of ISE and NOM, which have been previously filed with the Commission, and therefore promotes fair competition among the options exchanges. The Exchange anticipates that the proposed Block Order Mechanism will create new opportunities for the Exchange to attract new business and compete on an equal footing with other options exchanges with similar auctions. As noted above, the proposed changes to the risk protections will provide more consistent technology offerings across the Nasdaq affiliated exchanges, and for this reason, the Exchange does not believe its proposal will impose an undue burden on intermarket competition. The Exchange also notes that market participants on other exchanges are welcome to become participants on the Exchange if they determine if this proposed rule change has made BX a more attractive or favorable venue.

C. Self-Regulatory Organization's Statement on Comments on the Proposed Rule Change Received From Members, Participants, or Others

No written comments were either solicited or received.

III. Date of Effectiveness of the Proposed Rule Change and Timing for Commission Action

The Exchange has filed the proposed rule change pursuant to Section 19(b)(3)(A)(iii) of the Act [32] and Rule 19b–4(f)(6) thereunder.[33] Because the proposed rule change does not: (i) Significantly affect the protection of investors or the public interest; (ii) impose any significant burden on competition; and (iii) become operative prior to 30 days from the date on which it was filed, or such shorter time as the Commission may designate, if consistent with the protection of investors and the public interest, the proposed rule change has become effective pursuant to Section 19(b)(3)(A) of the Act and Rule 19b–4(f)(6)(iii) thereunder.[34]

A proposed rule change filed under Rule 19b–4(f)(6) [35] normally does not become operative prior to 30 days after the date of the filing. However, pursuant to Rule 19b4(f)(6)(iii),[36] the Commission may designate a shorter time if such action is consistent with the protection of investors and the public interest. The Exchange has asked the Commission to waive the 30-day operative delay so that the proposal may become operative immediately upon filing. The Commission believes that waiving the 30-day operative delay is consistent with the protection of investors and the public interest. The proposed rule change is related to a technology integration that the Exchange states will align BX's system functionality with functionality currently offered on other Nasdaq-affiliated exchanges and is expected to begin on September 14, 2020. The Commission believes that waiver of the operative delay will permit the proposed rule change to be operative by that date. Accordingly, the Commission waives the 30-day operative delay and designates the proposed rule change operative upon filing.[37]

At any time within 60 days of the filing of such proposed rule change, the Commission summarily may temporarily suspend such rule change if it appears to the Commission that such action is necessary or appropriate in the public interest, for the protection of investors, or otherwise in furtherance of the purposes of the Act. If the Commission takes such action, the Commission shall institute proceedings under Section 19(b)(2)(B) [38] of the Act to determine whether the proposed rule change should be approved or disapproved.

IV. Solicitation of Comments

Interested persons are invited to submit written data, views, and arguments concerning the foregoing, including whether the proposed rule change is consistent with the Act. Comments may be submitted by any of the following methods:

Electronic Comments

- Use the Commission's internet comment form (*http://www.sec.gov/rules/sro.shtml*); or
- Send an email to *rule-comments@sec.gov.* Please include File Number SR–BX–2020–023 on the subject line.

Paper Comments

- Send paper comments in triplicate to Secretary, Securities and Exchange Commission, 100 F Street NE, Washington, DC 20549–1090.

All submissions should refer to File Number SR–BX–2020–023. This file number should be included on the subject line if email is used. To help the Commission process and review your comments more efficiently, please use only one method. The Commission will post all comments on the Commission's internet website (*http://www.sec.gov/rules/sro.shtml*).

Copies of the submission, all subsequent amendments, all written statements with respect to the proposed rule change that are filed with the Commission, and all written communications relating to the proposed rule change between the Commission and any person, other than those that may be withheld from the public in accordance with the provisions of 5 U.S.C. 552, will be available for website viewing and printing in the Commission's Public Reference Room, 100 F Street NE, Washington, DC 20549, on official business days between the hours of 10:00 a.m. and 3:00 p.m. Copies of the filing also will be available for inspection and copying at the principal office of the Exchange. All comments received will be posted without change. Persons submitting comments are cautioned that we do not redact or edit personal identifying information from comment submissions. You should submit only information that you wish to make available publicly.

All submissions should refer to File Number SR–BX–2020–023 and should be submitted on or before October 1, 2020.

For the Commission, by the Division of Trading and Markets, pursuant to delegated authority.[39]

J. Matthew DeLesDernier,

Assistant Secretary.

[FR Doc. 2020–19941 Filed 9–9–20; 8:45 am]

BILLING CODE 8011–01–P

[32] 15 U.S.C. 78s(b)(3)(A)(iii).

[33] 17 CFR 240.19b–4(f)(6).

[34] 17 CFR 240.19b–4(f)(6). In addition, Rule 19b–4(f)(6) requires a self-regulatory organization to give the Commission written notice of its intent to file the proposed rule change at least five business days prior to the date of filing of the proposed rule change, or such shorter time as designated by the Commission. The Commission has waived the pre-filing requirement.

[35] 17 CFR 240.19b–4(f)(6).

[36] 17 CFR 240.19b–4(f)(6)(iii).

[37] For purposes only of waiving the 30-day operative delay, the Commission has considered the proposed rule's impact on efficiency, competition, and capital formation. *See* 15 U.S.C. 78c(f).

[38] 15 U.S.C. 78s(b)(2)(B).

[39] 17 CFR 200.30–3(a)(12).

SECURITIES AND EXCHANGE COMMISSION

[Release No. 34–89767; File No. SR–NASDAQ–2020–056]

Self-Regulatory Organizations; The Nasdaq Stock Market LLC; Notice of Filing and Immediate Effectiveness of Proposed Rule Change to Proposed Rule Change To Amend The NASDAQ Options Market LLC Pricing Schedule at Options 7, Section 2 and Update Other Rule Text Within Options 7, Section 1 and Options 7, Section 5

September 3, 2020.

Pursuant to Section 19(b)(1) of the Securities Exchange Act of 1934 (''Act''),[1] and Rule 19b–4 thereunder,[2] notice is hereby given that on August 21, 2020, The Nasdaq Stock Market LLC (''Nasdaq'' or ''Exchange'') filed with the Securities and Exchange Commission (''SEC'' or ''Commission'') the proposed rule change as described in Items I, II, and III, below, which Items have been prepared by the Exchange. The Commission is publishing this notice to solicit comments on the proposed rule change from interested persons.

I. Self-Regulatory Organization's Statement of the Terms of Substance of the Proposed Rule Change

The Exchange proposes to amend The NASDAQ Options Market LLC (''NOM'') Pricing Schedule at Options 7, Section 2, ''Nasdaq Options Market Fees and Rebates.'' The Exchange also proposes to amend certain rule citations within Options 7, update other rule text within Options 7, Section 1, ''Collection of Exchange Fees and Other Claims-Nasdaq Options Market,'' and Options 7, Section 5, ''Nasdaq Options Regulatory Fee.''

The Exchange originally filed the proposed pricing changes on August 3, 2020 as SR–NASDAQ–2020–047. On August 13, 2020, the Exchange withdrew that filing and submitted SR–NASDAQ–2020–052. On August 21, 2020, the Exchange withdrew SR–NASDAQ–2020–052 and replaced it with this proposal.

The text of the proposed rule change is available on the Exchange's website at *https://listingcenter.nasdaq.com/rulebook/nasdaq/rules,* at the principal office of the Exchange, and at the Commission's Public Reference Room.

II. Self-Regulatory Organization's Statement of the Purpose of, and Statutory Basis for, the Proposed Rule Change

In its filing with the Commission, the Exchange included statements concerning the purpose of and basis for the proposed rule change and discussed any comments it received on the proposed rule change. The text of these statements may be examined at the places specified in Item IV below. The Exchange has prepared summaries, set forth in sections A, B, and C below, of the most significant aspects of such statements.

A. Self-Regulatory Organization's Statement of the Purpose of, and Statutory Basis for, the Proposed Rule Change

1. Purpose

The Exchange proposes to amend NOM's Pricing Schedule at Options 7, Section 2, ''Nasdaq Options Market Fees and Rebates.'' The Exchange also proposes to amend certain rule citations within Options 7, update other rule text within Options 7, Section 1, ''Collection of Exchange Fees and Other Claims-Nasdaq Options Market,'' and Options 7, Section 5, ''Nasdaq Options Regulatory Fee.'' Each change will be described below.

Options 7, Section 2

Today, NOM Options 7, Section 2(1) provides for various fees and rebates applicable to NOM Participants. Today, the table of fees and rebates is divided into Penny Pilot Options and Non-Penny Pilot Options.[3] The Exchange pays Customer[4] and Professional[5] Rebates to Add Liquidity in Penny Symbols based on a table. To determine the applicable percentage of total industry customer equity and ETF option average daily volume, unless otherwise stated, the Participant's Penny and Non-Penny Symbol Customer and/or Professional volume that adds liquidity is included. The table for Customer and Professional Rebates to Add Liquidity in Penny Symbols is currently as follows:

[1] 15 U.S.C. 78s(b)(1).

[2] 17 CFR 240.19b–4.

[3] The Exchange proposes to replace the terms ''Pilot Options'' and ''Pilot'' with ''Symbol'' or ''Symbols'' throughout Options 7, Section 2. On April 1, 2020, the Commission approved the amendment to the OLPP to make permanent the Pilot Program (the ''OLPP Program''). *See* Securities Exchange Act Release No. 88532 (April 1, 2020), 85 FR 19545 (April 7, 2020) (File No. 4–443) (''Approval Order''). The Exchange recently filed a proposal to amend NOM Options 3, Section 3 to conform the rule to Section 3.1 of the Plan for the Purpose of Developing and Implementing Procedures Designed to Facilitate the Listing and Trading of Standardized Options (the ''OLPP''). *See* Securities Exchange Act Release No. 89167 (June 26, 2020), 85 FR 39953 (July 2, 2020) (SR–NASDAQ–2020–036). The Exchange's proposal amended NOM Options 3, Section 3 to refer to a Penny Interval Program instead of a Penny Pilot Program. This proposed change conforms the name of the program and removes a reference to a list of Penny Pilot Program symbols. The Exchange's proposal hereafter utilizes the term ''Penny Symbols'' and ''Non-Penny Symbols'' for these reasons.

[4] As proposed within Options 7, Section 1, the term ''Customer'' or (''C'') applies to any transaction that is identified by a Participant for clearing in the Customer range at The Options Clearing Corporation (''OCC'') which is not for the account of broker or dealer or for the account of a ''Professional'' (as that term is defined in Options 1, Section 1(a)(47)).

[5] As proposed within Options 7, Section 1 the term ''Professional'' or (''P'') means any person or entity that (i) is not a broker or dealer in securities, and (ii) places more than 390 orders in listed options per day on average during a calendar month for its own beneficial account(s) pursuant to Options 1, Section 1(a)(47). All Professional orders shall be appropriately marked by Participants.

Monthly volume		Rebate to add liquidity
Tier 1	Participant adds Customer, Professional, Firm, Non-NOM Market Maker and/or Broker-Dealer liquidity in Penny Pilot Options and/or Non-Penny Pilot Options of up to 0.10% of total industry customer equity and ETF option average daily volume (''ADV'') contracts per day in a month.	$0.20
Tier 2	Participant adds Customer, Professional, Firm, Non-NOM Market Maker and/or Broker-Dealer liquidity in Penny Pilot Options and/or Non-Penny Pilot Options above 0.10% to 0.20% of total industry customer equity and ETF option ADV contracts per day in a month.	0.25
Tier 3	Participant adds Customer, Professional, Firm, Non-NOM Market Maker and/or Broker-Dealer liquidity in Penny Pilot Options and/or Non-Penny Pilot Options above 0.20% to 0.30% of total industry customer equity and ETF option ADV contracts per day in a month.	0.42
Tier 4	Participant adds Customer, Professional, Firm, Non-NOM Market Maker and/or Broker-Dealer liquidity in Penny Pilot Options and/or Non-Penny Pilot Options above 0.30% to 0.40% of total industry customer equity and ETF option ADV contracts per day in a month.	0.43
Tier 5	Participant adds Customer, Professional, Firm, Non-NOM Market Maker and/or Broker-Dealer liquidity in Penny Pilot Options and/or Non-Penny Pilot Options above 0.40% to 0.80% of total industry customer equity and ETF option ADV contracts per day in a month.	0.45
Tier 6	Participant adds Customer, Professional, Firm, Non-NOM Market Maker and/or Broker-Dealer liquidity in Penny Pilot Options and/or Non-Penny Pilot Options above 0.80% or more of total industry customer equity and ETF option ADV contracts per day in a month, or Participant adds: (1) Customer and/or Professional liquidity in Penny Pilot Options and/or Non-Penny Pilot Options of 0.20% or more of total industry customer equity and ETF option ADV contracts per day in a month, and (2) has added liquidity in all securities through one or more of its Nasdaq Market Center MPIDs that represent 1.00% or more of Consolidated Volume in a month or qualifies for MARS (defined below).	[c] 0.48

Further, pursuant to current note ''d'', with respect to Customer and Professional Rebates to Add Liquidity in Penny Symbols, this note provides that, NOM Participants that qualify for any MARS Payment Tier in Section (6) will receive: (1) An additional $0.05 per contract Penny Pilot Options Customer and/or Professional Rebate to Add Liquidity for each transaction which adds liquidity in Penny Pilot Options in that month, in addition to qualifying Customer and/or Professional Rebate to Add Liquidity Tier 1, or (2) an additional $0.04 per contract Penny Pilot Options Customer and/or Professional Rebate to Add Liquidity for each transaction which adds liquidity in Penny Pilot Options in that month, in addition to qualifying Penny Pilot Options Customer and/or Professional Rebate to Add Liquidity Tiers 2–6. NOM Participants that qualify for a note ''c'' incentive will receive the greater of the note ''c'' [6] or note ''d'' incentive.

Also, pursuant to current note ''e'', NOM Participants that transact in all securities through one or more of its Nasdaq Market Center MPIDs that represent 3.00% or more of Consolidated Volume in the same month on The Nasdaq Stock Market will receive a $0.50 per contract rebate to add liquidity in Penny Pilot Options as Customer or Professional and $1.00 per contract rebate to add liquidity in Non-Penny Pilot Options as Customer or Professional. Participants that qualify for this rebate would not be eligible for any other rebates in Tiers 1–6 or other rebate incentives on NOM for Customer and Professional order flow in Options 7, Section 2(1).

Finally, pursuant to current note ''f'', NOM Participants that (a) add Customer, Professional, Firm, Non-NOM Market Maker and/or Broker-Dealer liquidity in Penny Pilot Options and/or Non-Penny Pilot Options above 1.20% of total industry customer equity and ETF option ADV contracts per day in a month, (b) execute greater than 0.04% of Consolidated Volume (''CV'') via Market-on-Close/Limit-on-Close (''MOC/LOC'') volume within The Nasdaq Stock Market Closing Cross within a month, and (c) add greater than 1.5 million shares per day of nondisplayed volume within The Nasdaq Stock Market within a month will receive a $0.55 per contract rebate to add liquidity in Penny Pilot Options as Customer or Professional and $1.05 per contract rebate to add liquidity in Non-Penny Pilot Options as Customer or Professional. Participants that qualify for this rebate would not be eligible for any other rebates in Tiers 1–6 or other rebate incentives on NOM for Customer and Professional order flow in Options 7, Section 2(1).

Penny Symbols

Today, Firms,[7] Non-NOM Market Makers,[8] and Broker-Dealers [9] are paid a $0.10 per contract Rebate to Add

[6] Current note ''c'' of Options 7, Section 2(1) provides, ''Participants that: (1) add Customer, Professional, Firm, Non-NOM Market Maker and/or Broker-Dealer liquidity in Penny Pilot Options and/or Non-Penny Pilot Options of 1.15% or more of total industry customer equity and ETF option ADV contracts per day in a month will receive an additional $0.02 per contract Penny Pilot Options Customer and/or Professional Rebate to Add Liquidity for each transaction which adds liquidity in Penny Pilot Options in that month; or (2) add Customer, Professional, Firm, Non-NOM Market Maker and/or Broker-Dealer liquidity in Penny Pilot Options and/or Non-Penny Pilot Options of 1.30% or more of total industry customer equity and ETF option ADV contracts per day in a month will receive an additional $0.05 per contract Penny Pilot Options Customer and/or Professional Rebate to Add Liquidity for each transaction which adds liquidity in Penny Pilot Options in that month; or (3) (a) add Customer, Professional, Firm, Non-NOM Market Maker and/or Broker-Dealer liquidity in Penny Pilot Options and/or Non-Penny Pilot Options above 0.80% of total industry customer equity and ETF option ADV contracts per day in a month, (b) add Customer, Professional, Firm, Non-NOM Market Maker and/or Broker-Dealer liquidity in Non-Penny Pilot Options above 0.12% of total industry customer equity and ETF option ADV contracts per day in a month, and (c) execute greater than 0.04% of Consolidated Volume (''CV'') via Market-on-Close/Limit-on-Close (''MOC/LOC'') volume within The Nasdaq Stock Market Closing Cross within a month will receive an additional $0.05 per contract Penny Pilot Options Customer and/or Professional Rebate to Add Liquidity for each transaction which adds liquidity in Penny Pilot Options in a month. Consolidated Volume shall mean the total consolidated volume reported to all consolidated transaction reporting plans by all exchanges and trade reporting facilities during a month in equity securities, excluding executed orders with a size of less than one round lot. For purposes of calculating Consolidated Volume and the extent of an equity member's trading activity, expressed as a percentage of or ratio to Consolidated Volume, the date of the annual reconstitution of the Russell Investments Indexes shall be excluded from both total Consolidated Volume and the member's trading activity.''

[7] The term ''Firm'' or (''F'') applies to any transaction that is identified by a Participant for clearing in the Firm range at OCC. *See* Options 7, Section 1.

[8] The term ''Non-NOM Market Maker'' or (''O'') is a registered market maker on another options exchange that is not a NOM Market Maker. A Non-NOM Market Maker must append the proper Non-NOM Market Maker designation to orders routed to NOM. *See* Options 7, Section 1.

[9] The term ''Broker-Dealer'' or (''B'') applies to any transaction which is not subject to any of the other transaction fees applicable within a particular category. *See* Options 7, Section 1.

Liquidity in Penny Symbols. NOM Market Makers [10] are paid Rebates to Add Liquidity in Penny Symbols will be paid as noted below.

Monthly volume		Rebate to add liquidity
Tier 1	Participant adds NOM Market Maker liquidity in Penny Pilot Options and/or Non-Penny Pilot Options of up to 0.10% of total industry customer equity and ETF option average daily volume (''ADV'') contracts per day in a month.	$0.20.
Tier 2	Participant adds NOM Market Maker liquidity in Penny Pilot Options and/or Non-Penny Pilot Options above 0.10% to 0.20% of total industry customer equity and ETF option ADV contracts per day in a month.	$0.25.
Tier 3	Participant: (a) Adds NOM Market Maker liquidity in Penny Pilot Options and/or Non-Penny Pilot Options above 0.20% to 0.60% of total industry customer equity and ETF option ADV contracts per day in a month: Or (b)(1) transacts in all securities through one or more of its Nasdaq Market Center MPIDs that represent 0.70% or more of Consolidated Volume (''CV'') which adds liquidity in the same month on The Nasdaq Stock Market, (2) transacts in Tape B securities through one or more of its Nasdaq Market Center MPIDs that represent 0.18% or more of CV which adds liquidity in the same month on The Nasdaq Stock Market, and (3) executes greater than 0.01% of CV via Market-on-Close/Limit-on-Close (''MOC/LOC'') volume within The Nasdaq Stock Market Closing Cross in the same month.	$0.30 or $0.40 in the following symbols AAPL, QQQ, IWM, SPY and VXX.
Tier 4	Participant adds NOM Market Maker liquidity in Penny Pilot Options and/or Non-Penny Pilot Options of above 0.60% to 0.90% of total industry customer equity and ETF option ADV contracts per day in a month.	$0.32 or $0.40 in the following symbols AAPL, QQQ, IWM, VXX and SPY.
Tier 5 ##	Participant adds NOM Market Maker liquidity in Penny Pilot Options and/or Non-Penny Pilot Options of above 0.40% of total industry customer equity and ETF option ADV contracts per day in a month and transacts in all securities through one or more of its Nasdaq Market Center MPIDs that represent 0.40% or more of Consolidated Volume (''CV'') which adds liquidity in the same month on The Nasdaq Stock Market.	$0.44.
Tier 6	Participant: (a)(1) Adds NOM Market Maker liquidity in Penny Pilot Options and/or Non-Penny Pilot Options above 0.95% of total industry customer equity and ETF option ADV contracts per day in a month, (2) executes Total Volume of 250,000 or more contracts per day in a month, of which 30,000 or more contracts per day in a month must be removing liquidity, and (3) adds Firm, Broker-Dealer and Non-NOM Market Maker liquidity in Non-Penny Pilot Options of 10,000 or more contracts per day in a month; or (b)(1) adds NOM Market Maker liquidity in Penny Pilot Options and/or Non-Penny Pilot Options above 1.50% of total industry customer equity and ETF option ADV contracts per day in a month, and (2) executes Total Volume of 250,000 or more contracts per day in a month, of which 15,000 or more contracts per day in a month must be removing liquidity.	$0.48.

Total Volume is defined as Customer, Professional, Firm, Broker-Dealer, Non876K54–NOM Market Maker and NOM Market Maker volume in Penny Symbols and/or Non-Penny Symbols which either adds or removes liquidity on NOM. Pursuant to current note ''##'', NOM Participants that qualify for the Tier 5 NOM Market Maker Rebate to Add Liquidity in Penny Pilot Options and add NOM Market Maker liquidity in Penny Pilot Options and/or Non-Penny Pilot Options of above 0.50% of total industry customer equity and ETF option ADV contracts per day in a month, will receive a $0.46 per contract rebate to add liquidity in Penny Pilot Options as Market Maker in lieu of the Tier 5 rebate.

The Exchange assesses Customers and Professionals a $0.48 per contract Fee for Removing Liquidity in Penny Symbols. Firms, Non-NOM Market Makers, NOM Market Makers and Broker-Dealers are assessed a $0.50 per contract Fee for Removing Liquidity in Penny Symbols.

With respect to the fees assessed to Non-NOM Market Makers and NOM Market Makers, pursuant to current note ''2'', Participants that add 1.30% of Customer, Professional, Firm, Broker-Dealer or Non-NOM Market Maker liquidity in Penny Pilot Options and/or Non-Penny Pilot Options of total industry customer equity and ETF option ADV contracts per day in a month are subject to the following pricing applicable to executions: A $0.48 per contract Penny Pilot Options Fee for Removing Liquidity when the Participant is (i) both the buyer and the seller or (ii) the Participant removes liquidity from another Participant under Common Ownership. Further, Participants that add 1.50% of Customer, Professional, Firm, Broker-Dealer or Non-NOM Market Maker liquidity in Penny Pilot Options and/or Non-Penny Pilot Options of total industry customer equity and ETF option ADV contracts per day in a month and meet or exceed the cap for The Nasdaq Stock Market Opening Cross during the month are subject to the following pricing applicable to executions less than 10,000 contracts: A $0.32 per contract Penny Pilot Options Fee for Removing Liquidity when the Participant is (i) both the buyer and seller or (ii) the Participant removes liquidity from another Participant under Common Ownership. Finally, Participants that add 1.75% of Customer, Professional, Firm, Broker-Dealer or Non-NOM Market Maker liquidity in Penny Pilot Options and/or Non-Penny Pilot Options of total industry customer equity and ETF option ADV contracts per day in a month are subject to the following pricing applicable to executions less than 10,000 contracts: A $0.32 per contract Penny Pilot Options Fee for Removing Liquidity when the

[10] As proposed, the term ''NOM Market Maker'' or (''M'') is a Participant that has registered as a Market Maker on NOM pursuant to Options 2, Section 1, and must also remain in good standing pursuant to Options 2, Section 9. In order to receive NOM Market Maker pricing in all securities, the Participant must be registered as a NOM Market Maker in at least one security. *See* proposed Options 7, Section 1.

Participant is (i) both the buyer and seller or (ii) the Participant removes liquidity from another Participant under Common Ownership.

Non-Penny Symbols

Today, the Exchange assesses no Fee for Adding Liquidity to Customers and Professionals in Non-Penny Symbols. Firms, Non-NOM Market Makers and Broker-Dealers are assessed a $0.45 per contract Fee for Adding Liquidity in Non-Penny Symbols. Finally, NOM Market Makers are assessed a $0.35 per contract Fee for Adding Liquidity in Non-Penny Symbols. The NOM Market Maker Fee for Adding Liquidity in Non-Penny Symbols will apply unless Participants meet the volume thresholds set forth in current note ''5''.

Pursuant to current note ''5'', Participants that add NOM Market Maker liquidity in Non-Penny Symbols of 7,500 to 9,999 ADV contracts per day in a month are assessed a $0.00 per contract Non-Penny Options Fee for Adding Liquidity in that month. Participants that add NOM Market Maker liquidity in Non-Penny Pilot Options of 10,000 or more ADV contracts per day in a month receive the Non-Penny Rebate to Add Liquidity for that month instead of paying the Non-Penny Fee for Adding Liquidity.

The Exchange assesses Customers and Professionals an $0.85 per contact Fee for Removing Liquidity in Non-Penny Symbols. Firms, Non-NOM Market Makers, NOM Market Makers and Broker-Dealers are assessed a $1.10 Fee for Removing Liquidity in Non-Penny Symbols.

Customers and Professionals are paid an $0.80 per contract Rebate to Add Liquidity in Non-Penny Symbols. Pursuant to current note ''1'', a Participant that qualifies for Customer or Professional Penny Pilot Options Rebate to Add Liquidity Tiers 2, 3, 4, or 5 in a month will receive an additional $0.10 per contract Non-Penny Pilot Options Rebate to Add Liquidity for each transaction which adds liquidity in Non-Penny Pilot Options in that month. A Participant that qualifies for Customer or Professional Penny Pilot Options Rebate to Add Liquidity Tier 6 in a month will receive an additional $0.20 per contract Non-Penny Pilot Options Rebate to Add Liquidity for each transaction which adds liquidity in Non-Penny Pilot Options in that month.

Further, as discussed above, pursuant to current note ''e'', NOM Participants that transact in all securities through one or more of its Nasdaq Market Center MPIDs that represent 3.00% or more of Consolidated Volume in the same month on The Nasdaq Stock Market will receive a $0.50 per contract rebate to add liquidity in Penny Pilot Options as Customer or Professional and $1.00 per contract rebate to add liquidity in Non-Penny Pilot Options as Customer or Professional. Participants that qualify for this rebate would not be eligible for any other rebates in Tiers 1–6 or other rebate incentives on NOM for Customer and Professional order flow in Options 7, Section 2(1).

Finally, as discussed above, pursuant to current note ''f'', NOM Participants that (a) add Customer, Professional, Firm, Non-NOM Market Maker and/or Broker-Dealer liquidity in Penny Pilot Options and/or Non-Penny Pilot Options above 1.20% of total industry customer equity and ETF option ADV contracts per day in a month, (b) execute greater than 0.04% of Consolidated Volume (''CV'') via Market-on-Close/Limit-on-Close (''MOC/LOC'') volume within The Nasdaq Stock Market Closing Cross within a month, and (c) add greater than 1.5 million shares per day of nondisplayed volume within The Nasdaq Stock Market within a month will receive a $0.55 per contract rebate to add liquidity in Penny Pilot Options as Customer or Professional and $1.05 per contract rebate to add liquidity in Non-Penny Pilot Options as Customer or Professional. Participants that qualify for this rebate would not be eligible for any other rebates in Tiers 1–6 or other rebate incentives on NOM for Customer and Professional order flow in Options 7, Section 2(1).

Firms, Non-NOM Market Makers and Broker-Dealers are not eligible for a Rebate to Add Liquidity in Non-Penny Symbols.

NOM Market Makers receive a $0.30 per contract Rebate for Adding Liquidity in Non-Penny Symbols, when the NOM Market Maker qualifies for the volume thresholds set forth in note ''5'', which was described above. Additionally, if a NOM Market Maker qualifies for note ''6'', they may receive additional incentives. Current note ''6'' provides that Participants that qualify for the Tier 6 NOM Market Maker Rebate to Add Liquidity in Penny Pilot Options will receive a $0.86 per contract NOM Market Maker Rebate to Add Liquidity in Non-Penny Pilot Options.[11] Participants that qualify for a note ''&'' incentive in the MARS Payment Schedule in Options 7, Section 2(6) receive an additional $0.02 per contract NOM Market Maker Rebate to Add Liquidity in Non-Penny Pilot Options, in addition to receiving an $0.86 per contract NOM Market Maker Rebate to Add Liquidity in Non-Penny Pilot Options. Participants that qualify for a note ''5'' incentive receive the greater of the note ''5'' or note ''6'' incentive.

Proposal

The Exchange proposes to restructure NOM's Pricing Schedule within Options 7, Section 2 for Penny and Non-Penny Symbols. The Exchange's proposal introduces new tables as explained in detail below.

The Exchange proposes to rename Options 7, Section 2(1) ''Fees and Rebates for Execution of Contracts on The Nasdaq Options Market.'' This section is currently titled ''Fees for Execution of Contracts on The Nasdaq Options Market.'' This change is proposed as the Exchange provides for rebates within Options 7, Section 2(1).

First, the Exchange proposes the below new table for its Rebates to Add Liquidity in Penny Symbols.

REBATES TO ADD LIQUIDITY IN PENNY SYMBOLS

	Tier 1	Tier 2	Tier 3	Tier 4	Tier 5	Tier 6
Customer [1 8 9 10]	($0.20)	($0.25)	($0.42)	($0.43)	($0.45)	[7] ($0.48)
Professional [1 9 10]	(0.20)	(0.25)	(0.42)	(0.43)	(0.45)	(0.48)
Broker-Dealer	(0.10)	(0.10)	(0.10)	(0.10)	(0.10)	(0.10)
Firm	(0.10)	(0.10)	(0.10)	(0.10)	(0.10)	(0.10)
Non-NOM Market Maker	(0.10)	(0.10)	(0.10)	(0.10)	(0.10)	(0.10)

[11] Current note ''6'' of Options 7, Section 2(1) provides, ''Participants that qualify for the Tier 6 NOM Market Maker Rebate to Add Liquidity in Penny Pilot Options will receive a $0.86 per contract NOM Market Maker Rebate to Add Liquidity in Non-Penny Pilot Options. Participants that qualify for a note ''&'' incentive in the MARS Payment Schedule in Section (6) will receive an additional $0.02 per contract NOM Market Maker Rebate to Add Liquidity in Non-Penny Pilot Options, in addition to receiving a $0.86 per contract NOM Market Maker Rebate to Add Liquidity in Non-Penny Pilot Options. Participants that qualify for a note ''5'' incentive will receive the greater of the note ''5'' or note ''6'' incentive.''

REBATES TO ADD LIQUIDITY IN PENNY SYMBOLS—Continued

	Tier 1	Tier 2	Tier 3	Tier 4	Tier 5	Tier 6
NOM Market Maker [3]	(0.20)	(0.25)	[4] (0.30)	[4] (0.32)	[11] (0.44)	(0.48)

Customer Rebates To Add Liquidity in Penny Symbols

With respect to Customer Rebates to Add Liquidity in Penny Symbols, the rebates paid for each tier [12] will continue to be the same. Also, the Exchange is relocating the current tier qualifications within new note ''1,'' with no changes. No changes are being made to the Customer Rebates to Add Liquidity in Penny Symbols, the rebates are simply being restructured into a new format.

Today, note ''c'' [13] is referenced with respect to Customer and Professional Tier 6 Rebate to Add Liquidity in Penny Symbols. The Exchange proposes to relocate note ''c'' to new note ''7'' [14] and amend the note. New note ''7'' is being amended to remove the incentive rebate applicable to Professionals orders as they relate to Rebates to Add Liquidity in Penny Symbols. With this proposal, new note ''7'' would provide that Participants that add Customer, Professional, Firm, Non-NOM Market Maker and/or Broker-Dealer liquidity in Penny Symbols and/or Non-Penny Symbols of 1.15% or more of total industry customer equity and ETF option ADV contracts per day in a month receive an additional $0.02 per contract Penny Symbol Customer Rebate to Add Liquidity for each transaction which adds liquidity in Penny Symbols in that month. With this proposal, only a Customer would receive the additional $0.02 per contract incentive. Today, Participants that add Customer, Professional, Firm, Non-NOM Market Maker and/or Broker-Dealer liquidity in Penny Pilot Options and/or Non-Penny Pilot Options of 1.30% or more of total industry customer equity and ETF option ADV contracts per day in a month receive an additional $0.05 per contract Penny Pilot Options Customer and/or Professional Rebate to Add Liquidity for each transaction which adds liquidity in Penny Pilot Options in that month. With this proposal, only a Customer would receive the additional $0.05 per contract incentive. Finally, today, Participants that add (a) Customer, Professional, Firm, Non-NOM Market Maker and/or Broker-Dealer liquidity in Penny Pilot Options and/or Non-Penny Pilot Options above 0.80% of total industry customer equity and ETF option ADV contracts per day in a month; (b) add Customer, Professional, Firm, Non-NOM Market Maker and/or Broker-Dealer liquidity in Non-Penny Pilot Options above 0.12% of total industry customer equity and ETF option ADV contracts per day in a month, and (c) execute greater than 0.04% of Consolidated Volume (''CV'') via Market-on-Close/Limit-on-Close (''MOC/LOC'') volume within The Nasdaq Stock Market Closing Cross within a month receive an additional $0.05 per contract Penny Pilot Options Customer and/or Professional Rebate to Add Liquidity for each transaction which adds liquidity in Penny Pilot Options in a month. With this proposal, only a Customer would receive the additional $0.05 per contract incentive. A Professional order would no longer receive the additional incentives. The Exchange believes that despite no longer offering certain incentives for Professional orders, the Exchange will continue to attract order flow to NOM. The description and calculation of Consolidated Volume [15] remains unchanged.

With respect to current notes ''***'', ''d'',[16] ''e'',[17] and ''f,'' [18] which apply to

[12] Today, the Exchange pays Customers, in Penny Symbols the following Rebates to Add Liquidity: $0.20 per contract for Tier 1, $0.25 per contract for Tier 2, $0.42 per contract for Tier 3, $0.43 per contract for Tier 4, $0.45 per contract for Tier 5, and $0.48 per contract for Tier 6.

[13] *See* note 6 above.

[14] Proposed new note ''7'' provides, ''Participants that: (1) add Customer, Professional, Firm, Non-NOM Market Maker and/or Broker-Dealer liquidity in Penny Symbols and/or Non-Penny Symbols of 1.15% or more of total industry customer equity and ETF option ADV contracts per day in a month will receive an additional $0.02 per contract Penny Symbol Customer Rebate to Add Liquidity for each transaction which adds liquidity in Penny Symbol in that month; or (2) add Customer, Professional, Firm, Non-NOM Market Maker and/or Broker-Dealer liquidity in Penny Symbols and/or Non-Penny Symbols of 1.30% or more of total industry customer equity and ETF option ADV contracts per day in a month will receive an additional $0.05 per contract Penny Symbol Customer Rebate to Add Liquidity for each transaction which adds liquidity in Penny Symbols in that month; or (3) (a) add Customer, Professional, Firm, Non-NOM Market Maker and/or Broker-Dealer liquidity in Penny Symbols and/or Non-Penny Symbols above 0.80% of total industry customer equity and ETF option ADV contracts per day in a month, (b) add Customer, Professional, Firm, Non-NOM Market Maker and/or Broker-Dealer liquidity in Non-Penny Symbols above 0.12% of total industry customer equity and ETF option ADV contracts per day in a month, and (c) execute greater than 0.04% of Consolidated Volume (''CV'') via Market-on-Close/Limit-on-Close (''MOC/LOC'') volume within The Nasdaq Stock Market Closing Cross within a month will receive an additional $0.05 per contract Penny Symbol Customer Rebate to Add Liquidity for each transaction which adds liquidity in Penny Symbols in a month. Consolidated Volume shall mean the total consolidated volume reported to all consolidated transaction reporting plans by all exchanges and trade reporting facilities during a month in equity securities, excluding executed orders with a size of less than one round lot. For purposes of calculating Consolidated Volume and the extent of an equity member's trading activity, expressed as a percentage of or ratio to Consolidated Volume, the date of the annual reconstitution of the Russell Investments Indexes shall be excluded from both total Consolidated Volume and the member's trading activity.''

[15] Consolidated Volume shall mean the total consolidated volume reported to all consolidated transaction reporting plans by all exchanges and trade reporting facilities during a month in equity securities, excluding executed orders with a size of less than one round lot. For purposes of calculating Consolidated Volume and the extent of an equity member's trading activity, expressed as a percentage of or ratio to Consolidated Volume, the date of the annual reconstitution of the Russell Investments Indexes shall be excluded from both total Consolidated Volume and the member's trading activity. *See* current note ''c'' within Options 7, Section 2.

[16] Current note ''d'' of Options 7, Section 2(1) provides, ''NOM Participants that qualify for any MARS Payment Tier in Section (6) will receive: (1) an additional $0.05 per contract Penny Pilot Options Customer and/or Professional Rebate to Add Liquidity for each transaction which adds liquidity in Penny Pilot Options in that month, in addition to qualifying Customer and/or Professional Rebate to Add Liquidity Tier 1, or (2) an additional $0.04 per contract Penny Pilot Options Customer and/or Professional Rebate to Add Liquidity for each transaction which adds liquidity in Penny Pilot Options in that month, in addition to qualifying Penny Pilot Options Customer and/or Professional Rebate to Add Liquidity Tiers 2–6. NOM Participants that qualify for a note ''c'' incentive will receive the greater of the note ''c'' or note ''d'' incentive.''

[17] Current note ''e'' of Options 7, Section 2(1) provides, ''NOM Participants that transact in all securities through one or more of its Nasdaq Market Center MPIDs that represent 3.00% or more of Consolidated Volume in the same month on The Nasdaq Stock Market will receive a $0.50 per contract rebate to add liquidity in Penny Pilot Options as Customer or Professional and $1.00 per contract rebate to add liquidity in Non-Penny Pilot Options as Customer or Professional. Participants that qualify for this rebate would not be eligible for any other rebates in Tiers 1–6 or other rebate incentives on NOM for Customer and Professional order flow in Options 7, Section 2(1).''

[18] Current note ''f'' of Options 7, Section 2(1) provides, ''NOM Participants that (a) add Customer, Professional, Firm, Non-NOM Market Maker and/or Broker-Dealer liquidity in Penny Pilot Options and/or Non-Penny Pilot Options above 1.20% of total industry customer equity and ETF option ADV contracts per day in a month, (b) execute greater than 0.04% of Consolidated Volume (''CV'') via Market-on-Close/Limit-on-Close (''MOC/LOC'') volume within The Nasdaq Stock Market Closing Cross within a month, and (c) add greater than 1.5 million shares per day of non-displayed volume

Continued

Customer Rebates to Add Liquidity in Penny Symbols, the Exchange proposes to relocate these notes, respectively, to new notes ''1'', ''8'', ''9'', and ''10''.

Current note ''* * *'' provides, ''The Customer and Professional Rebate to Add Liquidity in Penny Pilot Options will be paid as noted below. To determine the applicable percentage of total industry customer equity and ETF option average daily volume, unless otherwise stated, the Participant's Penny Pilot and Non-Penny Pilot Customer and/or Professional volume that adds liquidity will be included.'' The Exchange proposes to relocate this note to new note 1,[19] and amend the note to provide, ''The Customer and Professional Rebate to Add Liquidity in Penny Symbols will be paid per the highest tier achieved below. To determine the applicable percentage of total industry customer equity and ETF option average daily volume, unless otherwise stated, the Participant's Penny Symbol and Non-Penny Symbol Customer and/or Professional volume that adds liquidity will be included.'' While the proposed rule text is being amended to make clear that Penny Symbols will continue to be paid the highest tier achieved, this is the case today. The Exchange is not amending the manner in which the tiers are being applied today. As is the case today, to determine the applicable percentage of total industry customer equity and ETF option average daily volume, unless otherwise stated, the Participant's Penny Symbol and Non-Penny Symbol Customer and/or Professional volume that adds liquidity will be included.

The Exchange proposes to relocate note ''d'' into new note ''8'' and amend the note. Proposed new note ''8'' removes the incentive rebate applicable to Professionals orders as they relate to Rebates to Add Liquidity in Penny Symbols, when the NOM Participant qualifies for any MARS Payment Tier in Options, 7 Section 2(6). Today, Customer and Professional orders receive an additional $0.05 per contract Penny Symbol Rebate to Add Liquidity for each transaction which adds liquidity in Penny Symbols in that month, in addition to qualifying Customer and/or Professional Rebate to Add Liquidity Tier 1. With this proposed change, only a Customer would receive the additional $0.05 per contract incentive. Also, today, a NOM Participant qualifies for any MARS Payment Tier in Options, 7 Section 2(6) may receive an additional $0.04 per contract Penny Symbols Customer and/or Professional Rebate to Add Liquidity for each transaction which adds liquidity in Penny Symbols in that month, in addition to qualifying Penny Symbols Customer Rebate to Add Liquidity Tiers 2–6. With this proposal, only a Customer would receive the additional $0.04 per contract incentive. The above-referenced incentives would no longer be available to Professionals. The Exchange believes that despite no longer offering certain incentives for Professional orders, the Exchange will continue to attract order flow to NOM. Finally, the last sentence of current note ''d'' is being amended to state, ''Participants that qualify for note ''7'' and note ''8'' incentives will receive the greater of the note ''7'' or note ''8'' incentive, but not both.'' The proposed wording, requires NOM Participants that qualify for both new notes ''7'' and ''8'', to receive the greater of notes ''7'' or ''8''. Today, NOM Participants may only obtain the greater of notes ''c'' or ''d''. This new language is not substantively amending the current rule text as any NOM Participant could qualify for notes ''c'' or ''d'' today and, as currently noted within note ''d'', the NOM Participant would receive the greater incentive. As proposed, note ''8'' would provide:

> NOM Participants that qualify for any MARS Payment Tier in Section (6) will receive: (1) an additional $0.05 per contract Penny Symbol Customer Rebate to Add Liquidity for each transaction which adds liquidity in Penny Symbols in that month, in addition to qualifying Customer Rebate to Add Liquidity Tier 1, or (2) an additional $0.04 per contract Penny Symbol Customer Rebate to Add Liquidity for each transaction which adds liquidity in Penny Symbols in that month, in addition to qualifying Penny Symbol Customer Rebate to Add Liquidity Tiers 2–6. NOM Participants that qualify for note ''7'' and note ''8'' incentives will receive the greater of the note ''7'' or note ''8'' incentive, but not both.

Note ''e'' is being relocated to new note ''9'' and is being amended. New note ''9'' provides,

> NOM Participants that transact in all securities through one or more of its Nasdaq Market Center MPIDs that represent 3.00% or more of Consolidated Volume in the same month on The Nasdaq Stock Market will receive a $0.50 per contract Rebate to Add Liquidity in Penny Symbols as Customer, a $0.48 per contract rebate as Professional, a $1.00 per contract Rebate to Add Liquidity in Non-Penny Symbols as Customer, and a $0.90 per contract Rebate to Add liquidity in Non-Penny Symbols as Professional. Participants that qualify for this rebate would not be eligible for any other rebates in Tiers 1–6 or other rebate incentives on NOM for Customer and Professional order flow in Options 7, Section 2(1).

The Exchange is amending current note ''e'' to reduce the incentive paid to a Professional. The Exchange currently pays a $0.50 per contract Rebate to Add Liquidity in Penny Symbols to a Customer and a Professional. With this proposal, the Exchange would continue to pay a Customer a $0.50 per contract Rebate to Add Liquidity in Penny Symbols and would now pay a Professional a $0.48 per contract Rebate to Add Liquidity in Penny Symbols. Also, the Exchange currently pays a $1.00 per contract Rebate to Add Liquidity in Non-Penny Symbols to a Customer and a Professional. With this proposal, the Exchange would continue to pay a Customer a $1.00 per contract Rebate to Add Liquidity in Non-Penny Symbols and would now pay a Professional a $0.90 per contract Rebate to Add Liquidity in Non-Penny Symbols. The Exchange believes that despite lowering rebates for Professionals, the Exchange will continue to attract order flow to NOM.

Note ''f''[20] is being relocated to note ''10'' and amended. New note 10 provides,

> NOM Participants that (a) add Customer, Professional, Firm, Non-NOM Market Maker and/or Broker-Dealer liquidity in Penny Symbols and/or Non-Penny Symbols above 1.20% of total industry customer equity and ETF option ADV contracts per day in a month, (b) execute greater than 0.04% of Consolidated Volume (''CV'') via Market-on-Close/Limit-on-Close (''MOC/LOC'') volume within The Nasdaq Stock Market Closing Cross within a month, and (c) add greater than 1.5 million shares per day of non-displayed volume within The Nasdaq Stock Market within a month will receive a $0.55 per contract Rebate to Add Liquidity in Penny Symbols as Customer, a $0.48 per contract Rebate to Add Liquidity in Penny Symbols as Professional, and a $1.05 per contract Rebate to Add Liquidity in Non-Penny Symbols as Customer, and a $0.90 per contract Rebate to Add Liquidity in Non-Penny Symbols as Professional. Participants that qualify for this rebate would not be eligible for any other rebates in Tiers 1–6 or other rebate incentives on NOM for Customer and Professional order flow in Options 7, Section 2(1).

The Exchange is proposing to amend the Rebates to Add Liquidity in Penny Symbols for Customers and Professionals to lower Professional rebates. Today, provided a Customer

within The Nasdaq Stock Market within a month will receive a $0.55 per contract rebate to add liquidity in Penny Pilot Options as Customer or Professional and $1.05 per contract rebate to add liquidity in Non-Penny Pilot Options as Customer or Professional. Participants that qualify for this rebate would not be eligible for any other rebates in Tiers 1–6 or other rebate incentives on NOM for Customer and Professional order flow in Options 7, Section 2(1).''

[19] Current note 1 of Options 7, Section 2(1) is being relocated to new note ''12''.

[20] *See* note 19 above.

qualified for the note ''f'' incentive, the Customer and Professional would be paid a $0.55 per contract Rebate to Add Liquidity in Penny Symbols as Customer or Professional and $1.05 per contract Rebate to Add Liquidity in Non-Penny Symbols. With this proposal, the Exchange proposes to continue to pay Participants a Customer Rebate to Add Liquidity in Penny Symbols of $0.55 per contract. As proposed, Participants would receive a lower Professional Rebate to Add Liquidity in Penny Symbols of $0.48 per contract. Also with this proposal, the Exchange proposes to continue to pay Participants a Customer Rebate to Add Liquidity in Non-Penny Symbols of $1.05 per contract. As proposed, Participants would receive a lower Professional Rebate to Add Liquidity in Non-Penny Symbols of $0.90 per contract. The Exchange believes that despite lowering rebates for Professionals, the Exchange will continue to attract order flow to NOM.

Professional Rebates To Add Liquidity in Penny Symbols

Today, the Exchange pays Customer and Professional orders the same Rebates to Add Liquidity in Penny Symbols, as described above, subject to a six tiers of qualification and notes ''* * *'', ''d,'' ''e,'' and ''f,'' as specifically detailed above. The Exchange proposes to pay the same rebates for each tier.[21] Also, the Exchange is relocating the current tier qualifications within new note ''1,'' with no changes. As noted above, the Exchange proposes to remove or lower certain incentives for Professionals. While the Exchange proposes to continue to pay additional incentives or higher incentives for Customers, but not Professionals, the Exchange believes that it will continue to attract order flow to NOM.

Broker-Dealer, Firm, Non-NOM Market Maker Rebates To Add Liquidity in Penny Symbols

Today, Broker-Dealers, Firms and Non-NOM Market Makers orders are paid a $0.10 per contract Rebate to Add Liquidity in Penny Symbols. The Exchange intends to continue to pay Participants who submit Broker-Dealers, Firms and Non-NOM Market Makers orders a $0.10 per contract Rebate to Add Liquidity in Penny Symbols regardless of volume. Therefore, as proposed, Tiers 1–6 would pay a $0.10 per contract Rebate to Add Liquidity in Penny Symbols to Participants who submit Broker-Dealers, Firms and Non-NOM Market Makers orders.

NOM Market Maker Rebates To Add Liquidity in Penny Symbols

Today, NOM Market Makers are paid a Rebate to Add Liquidity in Penny Symbols based on a 6 tier qualifications as described above. The Exchange proposes to relocate the tier qualifications into note 3 without changing any of the rule text and retaining the meaning of ''Total Volume.''

With respect to the rebates, the Exchange is not amending the NOM Market Maker Rebates to Add Liquidity in Penny Symbols. The Exchange proposes to create a new note ''4'' which provides, ''Participants who achieve the NOM Market Maker Tier 3 or Tier 4 Rebate to Add Liquidity will receive $0.40 per contract to add liquidity in in the following symbols: AAPL, SPY, QQQ, IWM, and VXX.'' This new note ''4'' captures the current pricing of $0.40 per contract in the following symbols AAPL, QQQ, IWM, VXX and SPY for NOM Market Maker Tiers 3 and 4, without change. Current note ''##'' is being relocated to new note ''11'' without change.[22]

Second, the Exchange proposes to restructure the Fees and Rebates to Add Liquidity in Non-Penny Symbols as follows:

FEES AND REBATES TO ADD LIQUIDITY IN NON-PENNY SYMBOLS

Customer [9 10 12]	($0.80)
Professional [9 10 12]	(0.80)
Broker-Dealer	0.45
Firm	0.45
Non-NOM Market Maker	0.45
NOM Market Maker [5 6]	0.35/(0.30)

Customer and Professional Fees and Rebates To Add Liquidity in Non-Penny Symbols

The Exchange is proposing to continue to assess a Customer and a Professional no Fee for Adding Liquidity in Non-Penny Symbols and pay a Customer and a Professional an $0.80 per contract Rebate to Add Liquidity in Non-Penny Symbols. Notes ''e'' [23] and ''f'',[24] which are proposed to be relocated to new notes ''9'' and ''10,'' will continue to apply to the Customer and Professional Rebates to Add Liquidity in Non-Penny Symbols. The Exchange described the proposed amendments to new notes ''9'' and ''10'' above in the Penny Symbol section.

Current note 1 [25] is being relocated to new note ''12'' and amended. New note ''12'' will continue to apply to Customer and Professional Rebates to Add Liquidity in Non-Penny Symbols. As proposed, new note ''12'' provides,

> A Participant that qualifies for Customer or Professional Penny Symbol Rebate to Add Liquidity Tiers 2, 3, 4, or 5 in a month will receive an additional $0.10 per contract Non-Penny Symbol Rebate to Add Liquidity for each transaction which adds liquidity in Non-Penny Symbols in that month. A Participant that qualifies for Customer or Professional Penny Symbol Rebate to Add Liquidity Tier 6 in a month will receive an additional $0.20 per contract Non-Penny Symbol Rebate to Add Liquidity as Customer and an additional $0.10 per contract Non-Penny Symbol Rebate to Add Liquidity as Professional for such transactions which add liquidity in Non-Penny Symbols in that month.

The Exchange proposes to reduce the incentive for a Professional with new note ''12''. Today, both a Customer and a Professional that qualify for Customer or Professional Penny Symbol Rebate to Add Liquidity Tier 6 in a month receive an additional $0.20 per contract Non-Penny Symbol Rebate to Add Liquidity for each transaction which adds liquidity in Non-Penny Symbols in that month. With this proposal, a Customer that qualifies for new note ''12''would continue to receive an additional $0.20 per contract Non-Penny Symbol Rebate to Add Liquidity for such transactions which add liquidity in Non-Penny Symbols in that month. With this proposal, a Professional that qualifies for new note ''12'' would now receive an additional $0.10 per contract Non-Penny Symbol Rebate to Add Liquidity for such transactions which add liquidity in Non-Penny Symbols in that month. The Exchange believes that

[21] Today, the Exchange pays Professionals, in Penny Symbols the following Rebates to Add Liquidity: $0.20 per contract for Tier 1, $0.25 per contract for Tier 2, $0.42 per contract for Tier 3, $0.43 per contract for Tier 4, $0.45 per contract for Tier 5, and $0.48 per contract for Tier 6.

[22] Current note ''##'' of Options 7, Section 2(1) provides, ''NOM Participants that qualify for the Tier 5 NOM Market Maker Rebate to Add Liquidity in Penny Pilot Options and add NOM Market Maker liquidity in Penny Pilot Options and/or Non-Penny Pilot Options of above 0.50% of total industry customer equity and ETF option ADV contracts per day in a month, will receive a $0.46 per contract rebate to add liquidity in Penny Pilot Options as Market Maker in lieu of the Tier 5 rebate.''

[23] *See* note 18 above.

[24] *See* note 19 above.

[25] Current note 1 of Options 7, Section 2(1) provides, ''A Participant that qualifies for Customer or Professional Penny Pilot Options Rebate to Add Liquidity Tiers 2, 3, 4, or 5 in a month will receive an additional $0.10 per contract Non-Penny Pilot Options Rebate to Add Liquidity for each transaction which adds liquidity in Non-Penny Pilot Options in that month. A Participant that qualifies for Customer or Professional Penny Pilot Options Rebate to Add Liquidity Tier 6 in a month will receive an additional $0.20 per contract Non-Penny Pilot Options Rebate to Add Liquidity for each transaction which adds liquidity in Non-Penny Pilot Options in that month.''

despite lowering rebates for Professionals, the Exchange will continue to attract order flow to NOM.

Today, Firms, Non-NOM Market Makers and Broker Dealers pay a $0.45 per contract Fee for Add Liquidity in Non-Penny Symbols, this will remain the same. Today, NOM Market Makers pay a $0.35 per contract Fee for Adding Liquidity in Non-Penny Symbols; this is not changing. In addition to this NOM Market Maker Fee for Add Liquidity in Non-Penny Symbols, current note ''5''[26] applies. Current note ''5'' will continue to apply, however, this note is being amended to provide, ''The NOM Market Maker Fee for Adding Liquidity in Non-Penny Symbols will apply unless Participants meet the volume thresholds set forth in this note. Participants that add NOM Market Maker liquidity in Non-Penny Symbols of 10,000 to 14,999 ADV contracts per day in a month will be assessed a $0.00 per contract Non-Penny Options Fee for Adding Liquidity in that month. Participants that add NOM Market Maker liquidity in Non-Penny Symbols of 15,000 or more ADV contracts per day in a month will receive the Non-Penny Rebate to Add Liquidity for that month instead of paying the Non-Penny Fee for Adding Liquidity.'' The Exchange proposes to require a greater amount of Non-Penny Symbol ADV (7,500 to 9,999 ADV is being increased to 10,000 to 14,999 ADV) in order to qualify for a $0.00 per contract Non-Penny Options Fee for Adding Liquidity in that month. Also, the Exchange proposes to require a greater amount of NOM Market Maker liquidity in Non-Penny Symbols (10,000 ADV is being increased to 15,000 ADV) to receive the Non-Penny Rebate to Add Liquidity for that month instead of paying the Non-Penny Fee for Adding Liquidity. The Exchange believes that this proposal will encourage NOM Market Makers to add a greater amount of liquidity on NOM.

Today, Firms, Non-NOM Market Makers and Broker Dealers receive no Rebate to Add Liquidity in Non-Penny Symbols. This will remain the same. Today, NOM Market Makers receive a $0.30 per contract Rebate to Add Liquidity, subject to notes ''5'' and ''6''.[27] This will remain the same. Note ''6'' is being amended to provide,

> Participants that qualify for the Tier 6 NOM Market Maker Rebate to Add Liquidity in Penny Symbols will receive a $0.86 per contract NOM Market Maker Rebate to Add Liquidity in Non-Penny Symbols. Participants that qualify for a Tier 7 or higher in the MARS Payment Schedule in Section (6) will receive an additional $0.02 per contract NOM Market Maker Rebate to Add Liquidity in Non-Penny Symbols, in addition to receiving a $0.86 per contract NOM Market Maker Rebate to Add Liquidity in Non-Penny Symbols. Participants that qualify for note ''5'' and note ''6'' incentives will receive the greater of the note ''5'' or note ''6'' incentive, but not both incentives.

The Exchange proposes to amend current note ''6'' to replace the qualification related to note ''&'' with MARS Tier 7 or higher. The Exchange notes that the removal of note ''&'' and addition of new MARS Tier 7 are discussed below in the MARS section of this proposal. Also, similar to the clarification that is being made in new note ''8'' with respect to achieving the greater of two incentives, the Exchange proposes to make clear in amended note ''6'' that Participants may qualify for either note ''5'' or note ''6'', but not both. This change reflects current practice

Third, the Exchange proposes to restructure the Fees to Remove Liquidity in Penny and Non-Penny Symbols as follows:

FEES TO REMOVE LIQUIDITY IN PENNY AND NON-PENNY SYMBOLS

	Penny Symbols	Non-Penny Symbols
Customer	$0.48	$0.85
Professional	0.48	0.85
Broker-Dealer	0.50	1.10
Firm	0.50	1.10
Non-NOM Market Maker[2]	0.50	1.10
NOM Market Maker[2]	0.50	1.10

Today, the Exchange assesses the following Penny Symbol Fees to Remove Liquidity: $0.48 per contract for Customer and Professional and $0.50 per contract for Firms, Non-NOM Market Makers, NOM Market Makers and Broker-Dealers. These rates are not changing. Additionally, current note 2,[28] applies to NOM Market Maker Penny Symbol Fees to Remove Liquidity and will continue to apply, with only changes to account for the reference to ''Penny Pilot,'' as explained above.

Today, the Exchange assesses the following Non-Penny Symbol Fees to Remove Liquidity: $0.85 per contract for Customers and Professionals and $1.10 per contract for Firms, Non-NOM Market Makers, NOM Market Makers and Broker-Dealers. These rates are not changing.

[26] Current note ''5'' at Options 7, Section 2(1) provides, ''The NOM Market Maker Fee for Adding Liquidity in Non-Pilot Options will apply unless Participants meet the volume thresholds set forth in this note. Participants that add NOM Market Maker liquidity in Non-Penny Pilot Options of 7,500 to 9,999 ADV contracts per day in a month will be assessed a $0.00 per contract Non-Penny Options Fee for Adding Liquidity in that month. Participants that add NOM Market Maker liquidity in Non-Penny Pilot Options of 10,000 or more ADV contracts per day in a month will receive the Non-Penny Rebate to Add Liquidity for that month instead of paying the Non-Penny Fee for Adding Liquidity.''

[27] *See* note 12 above.

[28] Current note ''2'' of Options 7, Section 2(1) provides, ''Participants that add 1.30% of Customer, Professional, Firm, Broker-Dealer or Non-NOM Market Maker liquidity in Penny Pilot Options and/or Non-Penny Pilot Options of total industry customer equity and ETF option ADV contracts per day in a month will be subject to the following pricing applicable to executions: a $0.48 per contract Penny Pilot Options Fee for Removing Liquidity when the Participant is (i) both the buyer and the seller or (ii) the Participant removes liquidity from another Participant under Common Ownership. Participants that add 1.50% of Customer, Professional, Firm, Broker-Dealer or Non-NOM Market Maker liquidity in Penny Pilot Options and/or Non-Penny Pilot Options of total industry customer equity and ETF option ADV contracts per day in a month and meet or exceed the cap for The Nasdaq Stock Market Opening Cross during the month will be subject to the following pricing applicable to executions less than 10,000 contracts: a $0.32 per contract Penny Pilot Options Fee for Removing Liquidity when the Participant is (i) both the buyer and seller or (ii) the Participant removes liquidity from another Participant under Common Ownership. Participants that add 1.75% of Customer, Professional, Firm, Broker-Dealer or Non-NOM Market Maker liquidity in Penny Pilot Options and/or Non-Penny Pilot Options of total industry customer equity and ETF option ADV contracts per day in a month will be subject to the following pricing applicable to executions less than 10,000 contracts: a $0.32 per contract Penny Pilot Options Fee for Removing Liquidity when the Participant is (i) both the buyer and seller or (ii) the Participant removes liquidity from another Participant under Common Ownership.''

MARS Pricing

As set forth in Options 7, Section 2(6), the Exchange currently offers a Market Access and Routing Subsidy (''MARS'') to qualifying Participants that provide certain order routing functionalities to other Participants and/or use such functionalities themselves. Generally, under MARS, the Exchange pays participating NOM Participants to subsidize their costs of providing routing services to route orders to NOM as a way to attract higher volumes of electronic equity and ETF options to the Exchange from market participants. In particular, Participants that have System Eligibility [29] and have executed the requisite number of Eligible Contracts [30] daily in a month (''Average Daily Volume'' or ''ADV'') are entitled to a MARS Payment. The Exchange currently pays the following MARS Payments according to ADV submitted on NOM:[31]

Tiers	Average daily volume	MARS Payment (Penny)	MARS Payment (Non-Penny)
1	2,000	$0.07	$0.15
2	5,000	0.09	0.20
3	10,000	0.11	0.30
4	20,000	0.15	0.50
5	45,000	0.17	0.60

The Exchange also provides Participants that qualify for the Tier 6 Customer and Professional Rebate to Add Liquidity in Penny Symbols in Section 2(1) [32] an additional $0.09 per contract incentive in Penny Pilot Options, which is paid in addition to any Penny MARS Payment tier on MARS Eligible Contracts the NOM Participant qualifies for in a given month.[33]

In addition, the Exchange currently offers Participants that have total Affiliated Entity [34] or Common Ownership [35] average daily add volume (''ADAV'') of 3.00% or more of total industry customer equity and ETF option ADV contracts per day in a month an additional $0.01 per contract in Penny Symbols and an additional $0.03 per contract in Non-Penny Symbols, in addition to any MARS Payment tier on MARS Eligible Contracts the Participant qualifies for in a given month.[36]

For Participants that qualify for the Tier 5 MARS Payment, the Exchange also provides two supplemental rebates that are based on progressively increasing volume requirements of executed MARS Eligible Contracts ADV and total Affiliated Entity or Common Ownership ADAV. First, the Exchange offers Participants that execute at least 75,000 of MARS Eligible Contracts per day and have total Affiliated Entity or Common Ownership ADAV of 3.25% or more of total industry customer equity and ETF option ADV contracts per day in a month an additional $0.01 per contract in Penny Symbols and an additional $0.10 per contract in Non-Penny Symbols, in addition to MARS Payment Tier 5 on MARS Eligible Contracts the Participant qualifies for in a given month.[37]

Second, Participants that execute at least 100,000 of MARS Eligible Contracts per day and have a total Affiliated Entity or Common Ownership ADAV of 3.25% or more of total industry customer equity and ETF option ADV contracts per day in a month are eligible to receive an additional $0.02 per contract in Penny Symbols and an additional $0.19 per contract in Non-Penny Symbols, in addition to MARS Payment Tier 5 on MARS Eligible Contracts the Participant qualifies for in a given month.[38] NOM Participants that qualify for the note ''&'' incentive would not receive the note ''@'' incentive.

The Exchange now proposes a number of changes to its MARS program. As an initial matter, the Exchange proposes to eliminate the additional incentives set forth in notes ''@'' and ''&,'' and instead offer new MARS Payment Tiers 6–9. The

[29] To qualify for MARS, the Participant's routing system (''System'') would be required to: (1) Enable the electronic routing of orders to all of the U.S. options exchanges, including NOM; (2) provide current consolidated market data from the U.S. options exchanges; and (3) be capable of interfacing with NOM's API to access current NOM match engine functionality. Further, the Participant's System would also need to cause NOM to be the one of the top three default destination exchanges for (a) individually executed marketable orders if NOM is at the national best bid or offer (''NBBO''), regardless of size or time or (b) orders that establish a new NBBO on NOM's Order Book, but allow any user to manually override NOM as a default destination on an order-by-order basis. Any NOM Participant would be permitted to avail itself of this arrangement, provided that its order routing functionality incorporates the features described above and satisfies NOM that it appears to be robust and reliable. The Participant remains solely responsible for implementing and operating its System.

[30] For the purpose of qualifying for the MARS Payment, Eligible Contracts may include Firm, Non-NOM Market Maker, Broker-Dealer, or Joint Back Office or ''JBO'' equity option orders that add liquidity and are electronically delivered and executed. Eligible Contracts do not include Mini Option orders.

[31] The specified MARS Payment will be paid on all executed Eligible Contracts that add liquidity, which are routed to NOM through a participating NOM Participant's System and meet the requisite Eligible Contracts ADV. No payment will be made with respect to orders that are routed to NOM, but not executed. Furthermore, a Participant will not be entitled to receive any other revenue from the Exchange for the use of its System specifically with respect to orders routed to NOM.

[32] To qualify for the Tier 6 Customer and Professional Rebate to Add Liquidity in Penny Symbols, the Participant must add Customer, Professional, Firm, Non-NOM Market Maker and/or Broker-Dealer liquidity in Penny Symbols and/or Non-Penny Symbols above 0.80% or more of total industry customer equity and ETF option ADV contracts per day in a month, or the Participant must add: (1) Customer and/or Professional liquidity in Penny Symbols and/or Non-Penny Symbols of 0.20% or more of total industry customer equity and ETF option ADV contracts per day in a month, and (2) has added liquidity in all securities through one or more of its Nasdaq Market Center MPIDs that represent 1.00% or more of Consolidated Volume in a month or qualifies for MARS. *See* Options 7, Section 2(1).

[33] *See* note ''*'' in Section 2(6).

[34] The term ''Affiliated Entity'' is a relationship between an Appointed MM and an Appointed OFP for purposes of aggregating eligible volume for pricing in Options 7, Sections 2(1) and 2(6) for which a volume threshold or volume percentage is required to qualify for higher rebates or lower fees. The term ''Appointed MM'' is a NOM Market Maker who has been appointed by an Order Flow Provider (''OFP'') for purposes of qualifying as an Affiliated Entity. An OFP is a Participant, other than a NOM Market Maker, that submits orders, as agent or principal, to the Exchange. The term ''Appointed OFP'' is an OFP who has been appointed by a NOM Market Maker for purposes of qualifying as an Affiliated Entity. Participants under Common Ownership may not qualify as a counterparty comprising an Affiliated Entity. Each Participant may qualify for only one (1) Affiliated Entity relationship at any given time.

[35] The term ''Common Ownership'' shall mean Participants under 75% common ownership or control. Common Ownership shall apply to all pricing in Options 7, Section 2 for which a volume threshold or volume percentage is required to obtain the pricing.

[36] *See* note ''^'' in Section 2(6).

[37] See note ''@'' in Section 2(6).

[38] See note ''&'' in Section 2(6).

proposed MARS Payment Tiers will retain some features of the note ''@'' and note ''&'' incentives, namely the ADV requirements of executed MARS Eligible Contracts, while eliminating the total Affiliated Entity or Common Ownership ADAV requirement. At the time the Exchange adopted the note ''@'' and note ''&'' incentives, the Exchange sought to encourage market participants to aggregate volume for purposes of qualifying for the additional rebates, and ultimately, increase volume and activity on the Exchange. These changes have met with some success, and the Exchange will therefore continue to incentivize this behavior through the note ''^'' incentive. Nonetheless, the Exchange has yet to achieve the level of additional volume and activity it desires and as such, the Exchange proposes to reformulate its MARS program in order to improve the attractiveness of this program to new and existing Participants. As noted above, the revised MARS program will add new MARS Payment Tiers 6 through 9, and will also amend some of the existing MARS rebates. The proposed MARS pricing schedule will be as follows:

Tiers	Average daily volume (''ADV'')	MARS Payment (Penny)	MARS Payment (Non-Penny)
1	2,000	$0.11	$0.24
2	5,000	0.11	0.29
3	10,000	0.11	0.39
4	20,000	0.15	0.50
5	45,000	0.17	0.60
6	75,000	0.20	0.75
7	100,000	0.20	0.78
8	125,000	0.20	0.81
9	150,000	0.21	0.84

In addition, the Exchange proposes to apply the existing note ''^'' incentive to the new MARS Payment Tiers 6 through 9 so that NOM Participants that have total Affiliated Entity or Common Ownership ADAV of 3.00% or more of total industry customer equity and ETF option ADV contracts per day in a month would receive an additional $0.01 per contract in Penny Symbols and an additional $0.03 per contract in Non-Penny Symbols. This would be paid in addition to MARS Payment Tiers 6–9 on MARS Eligible Contracts the NOM Participant qualifies for in a given month, similar to how the note ''^'' incentive is paid on MARS Payment Tiers 1–5 today.

Lastly, the Exchange proposes to amend the existing note ''*'' incentive. As amended, NOM Participants that qualify for Customer and Professional Penny Symbols Rebate to Add Liquidity Tier 6 will receive a $0.20 per contract rebate in Penny Symbols in lieu of the Penny MARS Payment Tiers 1–5 on MARS Eligible Contracts the NOM Participant qualifies for in a given month.

Technical Amendments

The Exchange proposes to amend Options 7 to add ''Section 1 General Provisions'' before the rule text. The Exchange would also remove ''Section 1'' before the title ''Collection of Exchange Fees and Other Claims-Nasdaq Options Market'' and incorporate that text within the new Section 1, which includes other rule text. The amendment will assist Participants when citing to the rule text, which currently has no section reference. The Exchange also proposes to add the word ''The'' before the name ''Nasdaq Options Market.''

The Exchange also proposes to update rule citations to reflect current citations.[39] The Exchange previously relocated the Rulebook [40] and certain rule citations were not updated. Finally, the Exchange proposes to remove an obsolete date within Options 7, Section 5, ''Nasdaq Options Regulatory Fee.''

2. Statutory Basis

The Exchange believes that its proposal is consistent with Section 6(b) of the Act,[41] in general, and furthers the objectives of Sections 6(b)(4) and 6(b)(5) of the Act,[42] in particular, in that it provides for the equitable allocation of reasonable dues, fees, and other charges among members and issuers and other persons using any facility, and is not designed to permit unfair discrimination between customers, issuers, brokers, or dealers.

The Exchange's proposed changes to its Pricing Schedule are reasonable in several respects. As a threshold matter, the Exchange is subject to significant competitive forces in the market for options securities transaction services that constrain its pricing determinations in that market. The fact that this market is competitive has long been recognized by the courts. In *NetCoalition* v. *Securities and Exchange Commission,* the D.C. Circuit stated as follows: ''[n]o one disputes that competition for order flow is 'fierce.' . . . As the SEC explained, '[i]n the U.S. national market system, buyers and sellers of securities, and the broker-dealers that act as their order-routing agents, have a wide range of choices of where to route orders for execution'; [and] 'no exchange can afford to take its market share percentages for granted' because 'no exchange possesses a monopoly, regulatory or otherwise, in the execution of order flow from broker dealers'. . . .'' [43]

The Commission and the courts have repeatedly expressed their preference for competition over regulatory intervention in determining prices, products, and services in the securities markets. In Regulation NMS, while adopting a series of steps to improve the current market model, the Commission highlighted the importance of market forces in determining prices and SRO revenues and, also, recognized that current regulation of the market system ''has been remarkably successful in promoting market competition in its broader forms that are most important to investors and listed companies.'' [44]

[39] See amendments to descriptions of terms ''Customer'', ''NOM Market Maker'' ''Professional,'' and ''Joint Back Office'' within Options 7. This section is proposed to be relocated to Options 7, Section 1. Current Options 7, Section 1, which described the Collection of Exchange Fees and Other Claims-Nasdaq Options Market, is also being amended.

[40] *See* Securities Exchange Act Release No. 87778 (December 17, 2019), 84 FR 70590 (SR–NASDAQ–2019–098) (Notice of Filing and Immediate Effectiveness of Proposed Rule Change To Relocate Rules From Its Current Rulebook Into Its New Rulebook Shell).

[41] 15 U.S.C. 78 f(b).

[42] 15 U.S.C. 78f(b)(4) and (5).

[43] *NetCoalition* v. *SEC,* 615 F.3d 525, 539 (D.C. Cir. 2010) (quoting Securities Exchange Act Release No. 59039 (December 2, 2008), 73 FR 74770, 74782–83 (December 9, 2008) (SR–NYSEArca–2006–21)).

[44] Securities Exchange Act Release No. 51808 (June 9, 2005), 70 FR 37496, 37499 (June 29, 2005) (''Regulation NMS Adopting Release'').

Numerous indicia demonstrate the competitive nature of this market. For example, clear substitutes to the Exchange exist in the market for options security transaction services. The Exchange is only one of sixteen options exchanges to which market participants may direct their order flow. Within this environment, market participants can freely and often do shift their order flow among the Exchange and competing venues in response to changes in their respective pricing schedules. As such, the proposal represents a reasonable attempt by the Exchange to increase its liquidity and market share relative to its competitors.

Options 7, Section 2

The Exchange's proposal to restructure rebates and fees into new pricing tables, without changes to the fees and rebates or pricing qualifications, as applicable, is reasonable, equitable and not unfairly discriminatory because the restructuring is intended to bring greater clarity to the current fees and rebates assessed and paid by NOM. The Exchange believes that the new table formats allow Participants to more easily reference the pricing on NOM. Also, renaming Options 7, Section 2(1) to specifically refer to rebates is reasonable, equitable and not unfairly discriminatory as it will bring greater clarity to the pricing.

Rebates To Add Liquidity in Penny Symbols

The Exchange's proposal to relocate note ''c'' to new note ''7'', and relocate note ''d'' into new note ''8'', while amending these notes to remove the incentive rebates for Professionals transacting Penny Symbols in each of those notes (''7'' and ''8'') is reasonable, equitable and not unfairly discriminatory. The Customer and Professional Rebates to Add Liquidity in Penny Symbols should continue to attract Customer and Professional order flow to NOM. The additional incentives that would now be offered solely to Customer Rebates to Add Liquidity in Penny Symbols, and no longer offered to Professionals, are intended to attract additional Customer liquidity. Today, the Exchange pays the same Customer and Professional Rebates to Add Liquidity in Penny Symbols. These rebates for Customers and Professionals will continue to be the same. Customer liquidity offers unique benefits to the market which benefits all market participants. Customer liquidity benefits all market participants by providing more trading opportunities, which attracts market makers. An increase in the activity of these market participants in turn facilitates tighter spreads, which may cause an additional corresponding increase in order flow from other market participants. The Exchange believes that continuing to encourage Participants to add Professional liquidity creates competition among options exchanges because the Exchange believes that the rebates may cause market participants to select NOM as a venue to send Professional order flow. Paying the incentives [45] within new notes ''7'' and ''8'' solely to Customers and not Professionals is consistent with the treatment of Customer orders on other options venues, which pay Customers the highest rebates.[46] Customer liquidity is the most sought after liquidity among Participants and by continuing to offer the new notes ''7'' and ''8'' incentives only to Customers, the Exchange believes that NOM will continue to attract this valuable order flow. The incentives offered in new notes ''7'' and ''8'' would be uniformly applied to qualifying Participants.

The Exchange's proposal to relocate note ''***'' to new note ''1'',[47] and to modify the introduction to former note ''***'', proposed note ''1'', to provide, ''The Customer and Professional Rebate to Add Liquidity in Penny Symbols will be paid per the highest tier achieved below. To determine the applicable percentage of total industry customer equity and ETF option average daily volume, unless otherwise stated, the Participant's Penny Symbol and Non-Penny Symbol Customer and/or Professional volume that adds liquidity will be included,'' is reasonable, equitable and not unfairly discriminatory. The rule text is being amended to make clear that Penny Symbols will continue to be paid the highest tier achieved, as is the case today, the Exchange is not amending the manner in which the tiers are being applied today. As is the case today, to determine the applicable percentage of total industry customer equity and ETF option average daily volume, unless otherwise stated, the Participant's Penny Symbol and Non-Penny Symbol Customer and/or Professional volume that adds liquidity will be included. All Participants would continue to be uniformly paid the highest Customer and Professional Rebate to Add Liquidity tier in Penny Symbols as described in new note ''1''.

The Exchange's proposal to relocate note ''e'' to new note ''9'' and note ''f'' into new note ''10'' and amend notes ''9'' and ''10'' to lower the incentive paid to a Professional for Rebates to Add Liquidity in Penny Symbols and Non-Penny Symbols is reasonable, equitable and not unfairly discriminatory.[48] The Exchange proposes to continue to incentivize Professionals with this proposal, however, the Professional would be incentivized with a lower rebate incentive as compared to a Customer. With this proposal, Customer incentives within new notes ''9'' and ''10'' would remain unchanged. As proposed, Professional incentives would be lowered for each of these notes.[49] Today, the Exchange pays the same Customer and Professional Rebates to Add Liquidity in Penny Symbols and Non-Penny Symbols. These rebates for Customers and Professionals will continue to be the same. The Exchange believes that it is reasonable to continue to pay Professionals the same rebates as Customers, but offer lower additional incentives while continuing to incentivize Customers to qualify for additional incentives in order to obtain the highest rebates offered on NOM. Customer liquidity, unlike Professional liquidity, offers unique benefits to the market which benefits all market participants. Customer liquidity benefits all market participants by providing more trading opportunities, which attracts market makers. An increase in the activity of these market participants in turn facilitates tighter spreads, which may cause an additional corresponding increase in order flow from other market participants. Paying higher rebates to Customers is consistent with the treatment of Customers on other options venues that are paid the highest rebates.[50] Customer liquidity is the most sought after liquidity among Participants. With respect to Professionals, the Exchange believes that continuing to encourage Participants to add Professional

[45] Today, Customers and Professionals are entitled to various incentives within notes ''c'' and ''d'' related to Rebates to Add Liquidity in Penny Symbols. *See* notes 6 and 17, respectively above.

[46] *See* Nasdaq PHLX LLC Options 7, Section 1. Phlx pays rebates exclusively to Customers. *See also* Nasdaq GEMX, LLC Options 7, Section 3. Priority Customers receive the highest rebates.

[47] Current note 1 within Options 7, Section 2(1) is being amended and relocated to note ''12''.

[48] New notes ''9'' and ''10'' apply to both Penny Symbols and Non-Penny Symbols.

[49] As proposed, new note ''9'' would lower the Professional Rebate to Add Liquidity incentive in Penny Symbols from $0.50 to $0.48 per contract and the Professional Rebate to Add Liquidity incentive in Non-Penny Symbols from $1.00 to $0.90 per contract. As proposed, new note ''10'' would lower the Professional Rebate to Add Liquidity incentive in Penny Symbols from $0.55 to $0.48 per contract and the Professional Rebate to Add Liquidity incentive in Non-Penny Symbols from $1.05 to $0.90 per contract.

[50] *See* Nasdaq PHLX LLC Options 7, Section 1. Phlx pays rebates exclusively to Customers. *See also* Nasdaq GEMX, LLC Options 7, Section 3. Priority Customers receive the highest rebates.

liquidity creates competition among options exchanges because the Exchange believes that the rebates may cause market participants to select NOM as a venue to send Professional order flow. The Exchange notes that is equitable and not unfairly discriminatory to lower incentives for Professionals, who unlike Customers, have access to sophisticated trading systems that contain functionality not available to Customers. The new notes ''9'' and ''10'' incentives would be uniformly applied to qualifying Participants.

NOM Market Maker Rebates To Add Liquidity in Penny Symbols

The Exchange's proposal to create a new note ''4'' which provides, ''Participants who achieve the NOM Market Maker Tier 3 or Tier 4 Rebate to Add Liquidity will receive $0.40 per contract to add liquidity in the following symbols: AAPL, SPY, QQQ, IWM, and VXX'' is reasonable, equitable and not unfairly discriminatory. This new note captures the current pricing of $0.40 per contract in the following symbols AAPL, QQQ, IWM, VXX and SPY for NOM Market Maker Tiers 3 and 4. New note ''4'' will make clear the current pricing applicable to symbols: AAPL, SPY, QQQ, IWM, and VXX. The current pricing, which was relocated to new note ''4'', would continue to be uniformly applied to all Participants that qualify.

Fees and Rebates To Add Liquidity in Non-Penny Symbols

The Exchange's proposal to relocate current note 1 [51] to new ''12'' and amend note ''12'' is reasonable, equitable and not unfairly discriminatory. Today, both a Customer and a Professional that qualify for Customer or Professional Penny Symbol Rebate to Add Liquidity Tier 6 in a month receive an additional $0.20 per contract Non-Penny Symbol Rebate to Add Liquidity for each transaction which adds liquidity in Non-Penny Symbols in that month. With this proposal, a Customer that qualifies would continue to receive an additional $0.20 per contract Non-Penny Symbol Rebate to Add Liquidity for such transactions which add liquidity in Non-Penny Symbols in that month. With this proposal, a Professional that qualifies would now receive an additional $0.10 per contract Non-Penny Symbol Rebate to Add Liquidity for such transactions which add liquidity in Non-Penny Symbols in that month. The Exchange believes that despite lowering rebates for Professionals, the Exchange will continue to attract order flow to NOM. The Exchange proposes to continue to incentivize Professionals with this proposal, however, the Professional would be incentivized with a lower rebate as compared to a Customer. The Customer incentive within new note ''12'' remains unchanged. Today, the Exchange pays the same Tier 6 Customer and Professional Rebates to Add Liquidity in Penny Symbols and Non-Penny Symbols. These rebates for Customers and Professionals will continue to be the same. Customer liquidity offers unique benefits to the market which benefits all market participants. Customer liquidity benefits all market participants by providing more trading opportunities, which attracts market makers. An increase in the activity of these market participants in turn facilitates tighter spreads, which may cause an additional corresponding increase in order flow from other market participants. The Exchange believes that continuing to encourage Participants to add Professional liquidity creates competition among options exchanges because the Exchange believes that the rebates may cause market participants to select NOM as a venue to send Professional order flow. Paying higher rebates to Customers is consistent with the treatment of Customers on other options venues that are paid the highest rebates.[52] Customer liquidity is the most sought after liquidity among Participants. The new note ''12'' incentive would be uniformly applied to qualifying Participants.

The Exchange's proposal to amend current note ''5'' [53] to increase the ADV thresholds (7,500 to 9,999 ADV becomes 10,000 to 14,999 ADV and 10,000 ADV becomes 15,000 ADV) is reasonable, equitable and not unfairly discriminatory. The Exchange believes that the proposed increases in requisite ADV for the incentive related to the Fee for Adding Liquidity in Non-Penny Symbols will encourage NOM Market Makers to add a greater amount of liquidity on NOM. Any Participant may interact with the additional liquidity attracted by this incentive. Further, the Exchange would continue to uniformly apply this note ''5'' incentive to any qualifying Participant.

The Exchange's proposal to amend current note ''6'' [54] is reasonable, equitable and not unfairly discriminatory. The Exchange proposes to amend current note ''6'' to replace the qualification related to note ''&'' within MARS [55] with new ''MARS Tier 7 or higher.'' The Exchange believes that this replacement will continue to attract order flow to NOM in order to earn the amended note ''6'' incentive. As discussed in the MARS section of this proposal, in order to qualify for new MARS Tiers 7 or higher, Participants must execute at least 100,000 of MARS Eligible Contract per day. Thus, the proposed qualification for the additional note ''6'' incentive will have the same ADV threshold requirement as the current qualification, but will eliminate the total Affiliated Entity or Common Ownership ADAV requirement. By adjusting the qualifications for the note ''6'' incentive in this manner, the Exchange seeks to further encourage Participants to send high volumes of electronic equity and ETF options to NOM for execution in order to receive this rebate.

The Exchange notes that the additional note ''6'' incentive continues to be the highest available NOM Market Maker Rebate to Add Liquidity in Non-Penny Symbols (totaling $0.88 per contract).[56] As proposed, the Exchange believes that the rebate qualifications are appropriate and commensurate with the rebate amount. In particular, while the Exchange will eliminate the total Affiliated Entity or Common Ownership ADAV requirement for this additional note ''6'' incentive, the Exchange will continue to require Participants to meet both the stringent volume requirements of executing at least 100,000 of MARS Eligible Contract per day (*i.e.,* MARS Tiers 7 or higher) and the stringent requirements set forth in the Tier 6 NOM Market Maker Rebate to Add Liquidity in Penny Symbols, in order to receive this rebate.

The Exchange will uniformly apply the amended note ''6'' incentive to all qualifying NOM Participants. Similar to

[51] *See* note 27 above.

[52] *See* Nasdaq PHLX LLC Options 7, Section 1. Phlx pays rebates exclusively to Customers. *See also* Nasdaq GEMX, LLC Options 7, Section 3. Priority Customers receive the highest rebates.

[53] *See* note 28 above.

[54] *See* note 12 above.

[55] Options 7, Section 2(6) note ''&'' provides, ''NOM Participants that execute at least 100,000 of MARS Eligible Contracts per day and have total Affiliated Entity or Common Ownership ADAV of 3.25% or more of total industry customer equity and ETF option ADV contracts per day in a month will receive an additional $0.02 per contract in Penny Pilot Options and an additional $0.19 per contract in Non-Penny Pilot Options, in addition to MARS Payment tier 5 on MARS Eligible Contracts the NOM Participant qualifies for in a given month. NOM Participants that qualify for the note ''&'' incentive will not receive the note ''@'' incentive.''

[56] Specifically, Participants that qualify for Tier 7 or higher in the MARS Payment Schedule in Section (6) would receive an additional $0.02 per contract NOM Market Maker Rebate to Add Liquidity in Non-Penny Symbols, in addition to receiving a $0.86 per contract NOM Market Maker Rebate to Add Liquidity in Non-Penny Symbols, for a total rebate of $0.88 per contract.

the clarification that is being made in other notes, with respect to achieving the greater of two incentives, the Exchange's proposal to make clear in amended note ''6'' that Participants may qualify for either note ''5'' or note ''6'', but not both, is reasonable, equitable and not unfairly discriminatory. This change will bring greater clarity to the application of the incentives. This change reflects current practice.

MARS Pricing

The Exchange believes that the proposed changes to MARS pricing described above represent a reasonable attempt by the Exchange to fortify participation in the MARS program. In particular, the Exchange believes that it is reasonable to eliminate the note ''@'' and note ''&'' incentives because it will replace them with an amended MARS Payment schedule comprising of modified MARS rebates and new ADV tiers. The Exchange must periodically assess the effectiveness of the incentives it provides and scale back on certain incentives so that the Exchange may apply its resources to other, possibly more effective, rebates such as the proposed MARS Payment schedule. The Exchange believes that the proposed MARS Payment schedule will better align the cost of offering the MARS program with the benefit it brings to the marketplace. The proposed schedule is designed to attract higher volumes of electronic equity and ETF options orders to the Exchange, which will, in turn, benefit all NOM Participants by offering greater price discovery, increased transparency, and an increased opportunity to trade on the Exchange. The Exchange intends for the proposed schedule to achieve these results by increasing the number of ADV tiers in the schedule from five to nine and, at each tier, paying a base rebate that will be roughly the same as or greater than that which it pays now. For example, qualifying Participants would be entitled to receive a MARS Payment of $0.11 in Tiers 1 and 2 for Penny executions under this proposal (compared to $0.07 and $0.09 in Tiers 1 and 2 today), and entitled to receive MARS Payments of $0.24, $0.29, and $0.39 in Tiers 1, 2, and 3, respectively, for Non-Penny executions (compared to $0.15, $0.20, and $0.30 in Tiers 1–3 today). Furthermore, Participants that qualify for new MARS Payment Tiers 6–9 would receive base rebates ranging from $0.20 to $0.21 for Penny Symbols and from $0.75 to $0.84 for Non-Penny Symbols, whereas the highest base rebates currently available under the MARS program are $0.17 for Penny Symbols and $0.60 for Non-Penny Symbols.

The Exchange also believes that the proposed ADV thresholds for new MARS Payment Tiers 6–9 are set at reasonable levels that would make the associated rebates achievable and attractive to existing and potential program participants. As noted above, the new MARS Payment Tiers retain some features of the note ''@'' and note ''&'' incentives, namely the ADV threshold requirements of executed MARS Eligible Contracts, while eliminating the total Affiliated Entity or Common Ownership ADAV requirement, thus making it easier to qualify for some tiers. For example, new MARS Payment Tiers 6 and 7 retain the note ''@'' and note ''&'' requirements that Participants meet 75,000 and 100,000 Eligible Contracts ADV, respectively, to qualify for the associated MARS Payments without the added requirement of meeting certain total Affiliated Entity or Common Ownership ADAV thresholds. Taken together, the Exchange believes that the proposed MARS Payment Tiers will incentivize current and new program participants to achieve the higher tiers in order to receive the associated rebates.

The Exchange also believes that it is reasonable to apply the note ''^'' incentive to new MARS Payment Tiers 6–9 in order to continue incentivizing Participants to pool their volume in order to meet the total Affiliated Entity or Common Ownership ADAV requirement. The resulting increased volume and liquidity would benefit all market participants by providing more trading opportunities and tighter spreads.

The Exchange believes that the amended note ''*'' incentive is reasonable as it will continue to encourage Participants to achieve the highest Customer and Professional Rebate to Add Liquidity in Penny Symbols in Tier 6 and also qualify for MARS. As proposed, the Exchange will no longer provide $0.09 in Penny Symbols in addition to the Penny MARS Payment Tiers 1–5, but will instead provide a $0.20 per contract rebate in lieu of the MARS Payments. The Exchange believes this is reasonable for several reasons. As an initial matter, in Penny MARS Payment Tiers 1–3, Participants that qualify for the amended note ''*'' incentive would be eligible to receive a rebate that is roughly the same or greater than the rebate which they receive today. For example, Participants that qualify for Penny MARS Payment Tier 1 or Tier 2, and also qualify for the Tier 6 Customer and Professional Rebate to Add Liquidity in Penny Symbols, would receive a rebate of $0.20 per contract under this proposal, whereas today, they would receive $0.16 per contract and $0.18 per contract in Tiers 1 and 2, respectively. While qualifying Participants would receive a lower rebate in Penny MARS Payment Tiers 4 and 5 under this proposal than they would today,[57] the Exchange believes this is reasonable given the significantly higher rebates it is proposing to provide for the Non-Penny MARS Payment Tiers to promote Non-Penny Symbol order flow to the Exchange. The Exchange further believes that the amended note ''*'' rebate will better align the cost of offering this rebate with the benefit it brings to the marketplace as a means of incentivizing market participants to add Penny Symbol order flow sent to the Exchange.

The Exchange believes that its proposal to modify MARS pricing as described above is equitable and not unfairly discriminatory because all Participants may qualify for MARS provided they have requisite System Eligibility. In addition, while the Exchange is proposing to eliminate the note ''@'' and note ''&'' incentives, it will retain the features of these rebates in the proposed MARS Payment Tiers and in the note ''^'' incentive, as discussed above. As a result, the Exchange does not believe that the proposed changes will have a disproportionate effect on any market participant type. Furthermore, the Exchange believes that it is equitable and not unfairly discriminatory to continue to offer the note ''*'' incentive to Penny Symbols than Non-Penny Symbols due to the Exchange's desire to specifically promote Penny Symbol order flow to qualify for this rebate in this manner. Furthermore, the Exchange is also seeking to promote increased Non-Penny Symbol order flow with the significant MARS rebates it is proposing above. Ultimately, an increase in overall order flow will improve the quality of NOM, and increase its attractiveness to existing and prospective market participants.

Technical Amendments

The Exchange's proposal to amend Options 7 to add ''Section 1 General Provisions'' before the rule text, remove ''Section 1'' before the title ''Collection of Exchange Fees and Other Claims-Nasdaq Options Market'' and

[57] Today, Participants would be eligible to receive $0.24 per contract and $0.26 per contract in Tiers 5 and 6, respectively, if they also qualify for the Tier 6 Customer and Professional Rebate to Add Liquidity in Penny Symbols.

incorporate the rule text within new Options 7, Section 1, which includes other rule text, is reasonable, equitable and not unfairly discriminatory. The Exchange believes that these proposed changes will assist Participants in referencing the rule text that currently has no section reference. The Exchange also proposes to add the word ''The'' before the name ''Nasdaq Options Market'' for clarity.

The Exchange's proposal to amend Options 7, Section 2, Nasdaq Options Market—Fees and Rebates, to replace the terms ''Pilot Options'' and ''Pilot'' with ''Symbol'' or ''Symbols,'' as appropriate, is reasonable, equitable and not unfairly discriminatory. This amendment seeks to conform the name of the program.

The Exchange's proposal to update rule citations to reflect current citations is reasonable, equitable and not unfairly discriminatory. The Exchange relocated the Rulebook [58] and certain rule citations were not updated.[59] These amendments will bring greater clarity to the Rules.

Finally, the Exchange's proposal to remove an obsolete date within Options 7, Section 5, ''Nasdaq Options Regulatory Fee'' is reasonable, equitable and not unfairly discriminatory. This amendment will bring greater clarity to the Rules.

B. Self-Regulatory Organization's Statement on Burden on Competition

The Exchange does not believe that the proposed rule change will impose any burden on competition not necessary or appropriate in furtherance of the purposes of the Act.

Intermarket Competition

The proposal does not impose an undue burden on intermarket competition. The Exchange believes its proposal remains competitive with other options markets and will offer market participants another choice of where to transact options. The Exchange notes that it operates in a highly competitive market in which market participants can readily favor competing venues if they deem fee levels at a particular venue to be excessive, or rebate opportunities available at other venues to be more favorable. In such an environment, the Exchange must continually adjust its fees to remain competitive with other exchanges that have been exempted from compliance with the statutory standards applicable to exchanges. Because competitors are free to modify their own fees in response, and because market participants may readily adjust their order routing practices, the Exchange believes that the degree to which fee changes in this market may impose any burden on competition is extremely limited.

Intramarket Competition

The proposed amendments do not impose an undue burden on intramarket competition.

Options 7, Section 2

The Exchange's proposal to restructure rebates and fees into new pricing tables, without changes to the fees and rebates or pricing qualifications, as applicable, does not impose an undue burden on competition because the restructuring is intended to bring greater clarity to the current fee and rebates assessed and paid by NOM. The Exchange believes that the new table formats allow Participant to more easily reference the pricing on NOM.

Rebates To Add Liquidity in Penny Symbols

The Exchange's proposal to relocate note ''c'' to new note ''7'', and relocate note ''d'' into new note ''8, while amending these notes to remove the incentive rebates for Professionals transacting Penny Symbols in each of those notes (''7'' and ''8'') does not impose an undue burden on competition. Customer liquidity offers unique benefits to the market which benefits all market participants. Customer liquidity benefits all market participants by providing more trading opportunities, which attracts market makers. An increase in the activity of these market participants in turn facilitates tighter spreads, which may cause an additional corresponding increase in order flow from other market participants. The Exchange believes that continuing to encourage Participants to add Professional liquidity creates competition among options exchanges because the Exchange believes that the rebates may cause market participants to select NOM as a venue to send Professional order flow. Paying the incentives [60] within new notes ''7'' and ''8'' solely to Customers and not Professionals is consistent with the treatment of Customer orders on other options venues, which pay Customers the highest rebates.[61] Customer liquidity is the most sought after liquidity among Participants and by continuing to offer the new notes ''7'' and ''8'' incentives only to Customers, the Exchange believes that NOM will continue to attract this valuable order flow. The incentives offered in new notes ''7'' and ''8'' would be uniformly applied to qualifying Participants.

The Exchange's proposal to relocate note ''***'' to new note 1,[62] and instead provide, ''The Customer and Professional Rebate to Add Liquidity in Penny Symbols will be paid per the highest tier achieved below. To determine the applicable percentage of total industry customer equity and ETF option average daily volume, unless otherwise stated, the Participant's Penny Symbol and Non-Penny Symbol Customer and/or Professional volume that adds liquidity will be included,'' does not impose an undue burden on competition. All Participants would continue to be uniformly paid the highest Customer and Professional Rebate to Add Liquidity tier in Penny Symbols as described in new note ''1''.

The Exchange's proposal to relocate note ''e'' to new note ''9'' and amend note ''9,'' and relocate note ''f'' into new note ''10'' and amend note ''10'' to lower the incentive paid to a Professional for Rebates to Add Liquidity in Penny Symbols and Non-Penny Symbols does not impose an undue burden on competition.[63] As proposed, Professional incentives would be lowered for each of these notes.[64] Today, the Exchange pays the same Customer and Professional Rebates to Add Liquidity in Penny Symbols and Non-Penny Symbols. These rebates for Customers and Professionals will continue to be the same. Customer liquidity offers unique benefits to the market which benefits all market participants. Customer liquidity benefits all market participants by providing more trading opportunities, which

[58] *See* Securities Exchange Act Release No. 87778 (December 17, 2019), 84 FR 70590 (SR–NASDAQ–2019–098) (Notice of Filing and Immediate Effectiveness of Proposed Rule Change To Relocate Rules From Its Current Rulebook Into Its New Rulebook Shell).

[59] *See* note 41 above.

[60] Today, Customers and Professionals are entitled to various incentives within notes ''c'' and ''d'' related to Rebates to Add Liquidity in Penny Symbols. *See* notes 6 and 17, respectively above.

[61] *See* Nasdaq PHLX LLC Options 7, Section 1. Phlx pays rebates exclusively to Customers. *See also* Nasdaq GEMX, LLC Options 7, Section 3. Priority Customers receive the highest rebates.

[62] Current note 1 within Options 7, Section 2(1) is being amended and relocated to new note ''12''.

[63] New notes ''9'' and ''10'' apply to both Penny Symbols and Non-Penny Symbols.

[64] As proposed, new note ''9'' would lower the Professional Rebate to Add Liquidity incentive in Penny Symbols from $0.50 to $0.48 per contract and the Professional Rebate to Add Liquidity incentive in Non-Penny Symbols from $1.00 to $0.90 per contract. As proposed, new note ''10'' would lower the Professional Rebate to Add Liquidity incentive in Penny Symbols from $0.55 to $0.48 per contract and the Professional Rebate to Add Liquidity incentive in Non-Penny Symbols from $1.05 to $0.90 per contract.

attracts market makers. An increase in the activity of these market participants in turn facilitates tighter spreads, which may cause an additional corresponding increase in order flow from other market participants. The Exchange believes that continuing to encourage Participants to add Professional liquidity creates competition among options exchanges because the Exchange believes that the rebates may cause market participants to select NOM as a venue to send Professional order flow. Paying higher rebates to Customers is consistent with the treatment of Customers on other options venues that are paid the highest rebates.[65] Customer liquidity is the most sought after liquidity among Participants. The new notes ''9'' and ''10'' incentives would be uniformly applied to qualifying Participants.

NOM Market Maker Rebates To Add Liquidity in Penny Symbols

The Exchange's proposal to create a new note ''4'' which provides, ''Participants who achieve the NOM Market Maker Tier 3 or Tier 4 Rebate to Add Liquidity will receive $0.40 per contract to add liquidity in in the following symbols: AAPL, SPY, QQQ, IWM, and VXX'' does not impose an undue burden on competition. This new note captures the current pricing of $0.40 per contract in the following symbols AAPL, QQQ, IWM, VXX and SPY for NOM Market Maker Tiers 3 and 4. New note ''4'' will make clear the current pricing applicable to symbols: AAPL, SPY, QQQ, IWM, and VXX. The current pricing, which was relocated to new note ''4'', would continue to be uniformly applied to all Participants that qualify.

Fees and Rebates To Add Liquidity in Non-Penny Symbols

The Exchange's proposal to relocate current note 1 [66] to new ''12'' and amend note ''12'' does not impose an undue burden on competition. Today, the Exchange pays the same Tier 6 Customer and Professional Rebates to Add Liquidity in Penny Symbols and Non-Penny Symbols. These rebates for Customers and Professionals will continue to be the same. Customer liquidity offers unique benefits to the market which benefits all market participants. Customer liquidity benefits all market participants by providing more trading opportunities, which attracts market makers. An increase in the activity of these market participants in turn facilitates tighter spreads, which may cause an additional corresponding increase in order flow from other market participants. Paying higher rebates to Customers is consistent with the treatment of Customers on other options venues that are paid the highest rebates.[67] Customer liquidity is the most sought after liquidity among Participants. The new note ''12'' incentive would be uniformly applied to qualifying Participants.

The Exchange's proposal to amend current note ''5'' [68] to increase the requisite ADV related to the Fee for Adding Liquidity in Non-Penny Symbols (7,500 to 9,999 ADV becomes 10,000 to 14,999 ADV and 10,000 ADV becomes 15,000 ADV) does not impose an undue burden on competition. The Exchange would continue to uniformly apply this note ''5'' incentive to any qualifying Participant.

The Exchange's proposal to amend note ''6'' [69] does not impose an undue burden on competition. The Exchange will uniformly apply the amended note ''6'' incentive to all qualifying NOM Participants. Similar to the clarification that is being made in other notes, with respect to achieving the greater of two incentives, the Exchange's proposal to make clear in amended note ''6'' that Participants may qualify for either note ''5'' or note ''6'', but not both, does not impose an undue burden on competition. This change will bring greater clarity to the application of the incentives. This change reflects current practice.

MARS Pricing

The Exchange does not believe that the proposed changes to MARS pricing will impose any undue burden on intra-market competition. As noted above, all Participants may qualify for MARS provided they have requisite System Eligibility. All of the proposed MARS pricing changes are generally designed to attract additional order flow to NOM, which strengthens NOM's competitive position. Greater liquidity benefits all market participants by providing more trading opportunities and attracting greater participation by market makers. An increase in the activity of these market participants in turn facilitates tighter spreads.

Technical Amendments

The Exchange's proposal to amend Options 7 to add ''Section 1 General Provisions'' before the rule text, remove ''Section 1'' before the title ''Collection of Exchange Fees and Other Claims-Nasdaq Options Market'' and incorporate the rule text within new Options 7, Section 1, which includes other rule text, does not impose an undue burden on competition. The Exchange believes that these proposed changes will assist Participants in referencing the rule text that currently has no section reference. The Exchange also proposes to add the word ''The'' before the name ''Nasdaq Options Market'' for clarity.

The Exchange's proposal to amend Options 7, Section 2, Nasdaq Options Market—Fees and Rebates, to replace the terms ''Pilot Options'' and ''Pilot'' with ''Symbol'' or ''Symbols,'' as appropriate, does not impose an undue burden on competition. This amendment seeks to conform the name of the program.

The Exchange's proposal to update rule citations to reflect current citations does not impose an undue burden on competition. The Exchange relocated the Rulebook [70] and certain rule citations were not updated.[71] These amendments will bring greater clarity to the Rules.

Finally, the Exchange's proposal to remove an obsolete date within Options 7, Section 5, ''Nasdaq Options Regulatory Fee'' does not impose an undue burden on competition. This amendment will bring greater clarity to the Rules.

C. Self-Regulatory Organization's Statement on Comments on the Proposed Rule Change Received From Members, Participants, or Others

No written comments were either solicited or received.

III. Date of Effectiveness of the Proposed Rule Change and Timing for Commission Action

The foregoing rule change has become effective pursuant to Section 19(b)(3)(A)(ii) of the Act.[72]

At any time within 60 days of the filing of the proposed rule change, the Commission summarily may temporarily suspend such rule change if it appears to the Commission that such action is: (i) Necessary or appropriate in the public interest; (ii) for the protection of investors; or (iii) otherwise in

[65] *See* Nasdaq PHLX LLC Options 7, Section 1. Phlx pays rebates exclusively to Customers. *See also* Nasdaq GEMX, LLC Options 7, Section 3. Priority Customers receive the highest rebates.

[66] *See* note 27 above.

[67] *See* Nasdaq PHLX LLC Options 7, Section 1. Phlx pays rebates exclusively to Customers. *See also* Nasdaq GEMX, LLC Options 7, Section 3. Priority Customers receive the highest rebates.

[68] *See* note 28 above.

[69] *See* note 12 above.

[70] *See* Securities Exchange Act Release No. 87778 (December 17, 2019), 84 FR 70590 (SR–NASDAQ–2019–098) (Notice of Filing and Immediate Effectiveness of Proposed Rule Change To Relocate Rules From Its Current Rulebook Into Its New Rulebook Shell).

[71] *See* note 41 above.

[72] 15 U.S.C. 78s(b)(3)(A)(ii).

furtherance of the purposes of the Act. If the Commission takes such action, the Commission shall institute proceedings to determine whether the proposed rule should be approved or disapproved.

IV. Solicitation of Comments

Interested persons are invited to submit written data, views, and arguments concerning the foregoing, including whether the proposed rule change is consistent with the Act. Comments may be submitted by any of the following methods:

Electronic Comments

- Use the Commission's internet comment form (*http://www.sec.gov/rules/sro.shtml*); or
- Send an email to *rule-comments@sec.gov.* Please include File Number SR–NASDAQ–2020–056 on the subject line.

Paper Comments

- Send paper comments in triplicate to Secretary, Securities and Exchange Commission, 100 F Street NE, Washington, DC 20549–1090.

All submissions should refer to File Number SR–NASDAQ–2020–056. This file number should be included on the subject line if email is used. To help the Commission process and review your comments more efficiently, please use only one method. The Commission will post all comments on the Commission's internet website (*http://www.sec.gov/rules/sro.shtml*).

Copies of the submission, all subsequent amendments, all written statements with respect to the proposed rule change that are filed with the Commission, and all written communications relating to the proposed rule change between the Commission and any person, other than those that may be withheld from the public in accordance with the provisions of 5 U.S.C. 552, will be available for website viewing and printing in the Commission's Public Reference Room, 100 F Street NE, Washington, DC 20549, on official business days between the hours of 10:00 a.m. and 3:00 p.m. Copies of the filing also will be available for inspection and copying at the principal office of the Exchange. All comments received will be posted without change. Persons submitting comments are cautioned that we do not redact or edit personal identifying information from comment submissions. You should submit only information that you wish to make available publicly.

All submissions should refer to File Number SR–NASDAQ–2020–056 and should be submitted on or before October 1, 2020.

For the Commission, by the Division of Trading and Markets, pursuant to delegated authority.[73]

J. Matthew DeLesDernier,

Assistant Secretary.

[FR Doc. 2020–19946 Filed 9–9–20; 8:45 am]

BILLING CODE 8011–01–P

SECURITIES AND EXCHANGE COMMISSION

[Release No. 34–89773; File No. SR–NYSE–2020–40]

Self-Regulatory Organizations; New York Stock Exchange LLC; Notice of Filing and Immediate Effectiveness of Proposed Rule Change To Amend Section 902.02 of the NYSE Listed Company Manual To Waive Initial Listing Fees and First Partial Year Annual Listing Fees for Any Issuer Not Listed on a National Securities Exchange That Is Listing Upon Closing of Its Acquisition of a SPAC Listed on the NYSE

September 4, 2020.

Pursuant to Section 19(b)(1)[1] of the Securities Exchange Act of 1934 (the ''Act'')[2] and Rule 19b–4 thereunder,[3] notice is hereby given that, on August 25, 2020, New York Stock Exchange LLC (''NYSE'' or the ''Exchange'') filed with the Securities and Exchange Commission (the ''Commission'') the proposed rule change as described in Items I, II, and III below, which Items have been prepared by the self-regulatory organization. The Commission is publishing this notice to solicit comments on the proposed rule change from interested persons.

I. Self-Regulatory Organization's Statement of the Terms of Substance of the Proposed Rule Change

The Exchange proposes to amend Section 902.02 of the NYSE Listed Company Manual (the ''Manual'') to waive initial listing fees and the first partial year annual fee for any company not listed on a national securities exchange that is listing upon closing of its acquisition of a special purpose acquisition company listed on the NYSE. The proposed rule change is available on the Exchange's website at *www.nyse.com,* at the principal office of the Exchange, and at the Commission's Public Reference Room.

[73] 17 CFR 200.30–3(a)(12).

[1] 15 U.S.C. 78s(b)(1).

[2] 15 U.S.C. 78a.

[3] 17 CFR 240.19b–4.

II. Self-Regulatory Organization's Statement of the Purpose of, and Statutory Basis for, the Proposed Rule Change

In its filing with the Commission, the self-regulatory organization included statements concerning the purpose of, and basis for, the proposed rule change and discussed any comments it received on the proposed rule change. The text of those statements may be examined at the places specified in Item IV below. The Exchange has prepared summaries, set forth in sections A, B, and C below, of the most significant parts of such statements.

A. Self-Regulatory Organization's Statement of the Purpose of, and the Statutory Basis for, the Proposed Rule Change

1. Purpose

The Exchange proposes to amend Section 902.02 of the Manual to waive initial listing fees and the first partial year annual fee for any company not listed on a national securities exchange that is listing upon closing of its acquisition of a special purpose acquisition company (''SPAC'') listed on the NYSE.

When a SPAC consummates its business combination, the SPAC is typically the legal acquirer in the transaction and, provided it meets the continued listing standards applied in connection with a business combination by a listed SPAC, it can remain listed on the Exchange. Section 902.11 of the Manual specifies that a listed SPAC is not required to pay any supplemental listing fees for any shares issued in connection with its business combination, so there are no listing fees payable in connection with a business combination between an NYSE listed SPAC and a company which is not listed on a national securities exchange where the NYSE listed SPAC is the acquirer in the transaction.[4] Similarly, the NYSE does not have any provision

[4] Section 902.11 provides as follows:

An Acquisition Company which remains listed upon consummation of its Business Combination will not be subject to any fees in relation to the issuance of any additional shares in connection with the consummation of the Business Combination or the issuance of any additional shares in a transaction which is occurring at the same time as the Business Combination with a closing contractually contingent on the consummation of the Business Combination.

As the treatment of the issuance of additional shares by a NYSE listed SPAC in connection with its business combination is specifically dealt with by the fee waiver set forth in Section 902.11, the provisions of Section 902.03 with respect to the issuance of additional shares are inapplicable to issuances that qualify for the waiver under Section 902.11.

for charging prorated annual fees with respect to shares of currently listed companies issued during the course of a calendar year (such shares are reflected in the full year annual fee bill for the next subsequent calendar year). As such, there are no prorated annual fees billed in connection with the issuance of additional shares upon consummation of a business combination by an NYSE listed SPAC in which the SPAC is the surviving legal entity. By contrast, if a company that is not listed on the NYSE or another national securities exchange merges with a NYSE listed SPAC and the non-listed company is the acquirer in the transaction, the non-listed company is treated as a new listing and must pay initial listing fees and prorated annual fees in relation to all shares issued and outstanding at the time of initial listing.[5]

To address this disparity, the Exchange proposes to amend the fee waiver provisions of Section 902.02 of the Manual. Specifically, Section 902.02 includes a waiver of the initial listing fee applicable to the listing of a company that is not itself listed on a national securities exchange immediately prior to its initial listing on the Exchange but is listing a class of equity securities upon closing of its acquisition of a SPAC which had a class of equity securities listed on another national securities exchange prior to the closing of such acquisition. The Exchange proposes to extend this waiver so that it will apply in cases where a company that is not itself listed on a national securities exchange immediately prior to its initial listing on the Exchange is listing a class of equity securities upon closing of its acquisition of a SPAC which had a class of equity securities listed on the NYSE prior to the closing of such acquisition. Similarly, Section 902.02 currently provides that the Exchange waives for any company that is not listed immediately prior to listing its primary class of common shares upon closing of its acquisition of a SPAC the requirement to pay annual fees with respect to that primary class of common shares or any other class of securities listed in conjunction therewith for the remainder of the calendar year in which the listing occurs. The Exchange also proposes to extend this waiver so that it will apply in cases where a company that is not itself listed on a national securities exchange immediately prior to its initial listing on the Exchange is listing a class of equity securities [sic] upon closing of its acquisition of a SPAC which had a class of equity securities listed on the Exchange prior to the closing of such acquisition. The decision whether to structure a business combination with the SPAC as the legal acquirer rather than the other party does not result in the listing of a substantively different entity. Accordingly, the Exchange believes there is no basis for charging fees purely on the basis of the structure of the business combination chosen by the parties.

The Exchange does not expect there to be a significant number of listings in which this proposed fee waiver will be applicable. Consequently, the proposed rule change would not affect the Exchange's commitment of resources to its regulatory oversight of the listing process or its regulatory programs.

2. Statutory Basis

The Exchange believes that the proposed rule change is consistent with Section 6(b) of the Act,[6] in general, and furthers the objectives of Section 6(b)(4)[7] of the Act, in particular, in that it is designed to provide for the equitable allocation of reasonable dues, fees, and other charges. The Exchange also believes that the proposed rule change is consistent with Section 6(b)(5) of the Act,[8] in that it is designed to promote just and equitable principles of trade, to foster cooperation and coordination with persons engaged in regulating, clearing, settling, processing information with respect to, and facilitating transactions in securities, to remove impediments to and perfect the mechanism of a free and open market and a national market system, and, in general, to protect investors and the public interest and is not designed to permit unfair discrimination between customers, issuers, brokers, or dealers.

The Proposed Change is Reasonable

The Exchange operates in a highly competitive marketplace for the listing of equity securities. The Commission has repeatedly expressed its preference for competition over regulatory intervention in determining prices, products, and services in the securities markets.

The Exchange believes that the ever-shifting market share among the exchanges with respect to new listings and the transfer of existing listings between competitor exchanges demonstrates that issuers can choose different listing markets in response to fee changes. Accordingly, competitive forces constrain exchange listing fees. Stated otherwise, changes to exchange listing fees can have a direct effect on the ability of an exchange to compete for new listings and retain existing listings.

The Proposal is an Equitable Allocation of Fees

The Exchange believes that the proposed fee waivers are equitable as it being implemented solely to avoid an anomalous fee outcome arising from the manner in which a SPAC business combination has been structured.

The Proposal is Not Unfairly Discriminatory

The Exchange believes that the proposal is not unfairly discriminatory, because the proposed waivers are solely intended to avoid the impact on a small group of issuers of an anomalous fee outcome arising from the manner in which a SPAC business combination has been structured. Section 902.11 includes a specific waiver of all listing fees for the issuance of shares by an NYSE listed SPAC which remains listed upon consummation of its business combination in relation to the issuance of any additional shares in connection with the consummation of the business combination or the issuance of any additional shares in a transaction which is occurring at the same time as the business combination with a closing contractually contingent on the consummation of the business combination. Similarly, the NYSE does not have any provision for charging prorated annual fees with respect to shares of currently listed companies issued during the course of a calendar year (such shares are reflected in the full year annual fee bill for the next subsequent calendar year). As such, there are no prorated annual fees billed in connection with the issuance of additional shares upon consummation of a business combination by an NYSE listed SPAC in which the SPAC is the surviving legal entity. By contrast, if a company that is not listed on the NYSE or another national securities exchange merges with a NYSE listed SPAC and the non-listed company is the acquirer in the transaction, the non-listed company is treated as a new listing and

[5] Pursuant to an exception set forth in Section 902.03 of the Manual, in the case of transactions such as an a merger between a listed and an unlisted company in which the unlisted company is the survivor, listing fees for that newly listed issuer are calculated at a rate of 25% of total Listing fees for each class of securities being listed (to the extent that total calculated listing fee for a class of common shares would be greater than $295,000, the calculation would be 25% of the $295,000 maximum for a new listing of common shares). The special charge of $50,000 and the $150,000 minimum charge applicable when an issuer first lists a class of common shares do not apply to these types of transactions.

[6] 15 U.S.C. 78f(b).

[7] 15 U.S.C. 78f(b)(4).

[8] 15 U.S.C. 78f(b)(5).

must pay initial listing fees and prorated annual fees in relation to all shares issued and outstanding at the time of initial listing.

A SPAC is a shell company with no business operations. Consequently, the parties to a business combination between a SPAC and an operating company have significant flexibility in how they choose to structure the business combination, including in determining which entity will be the legal acquirer. Accordingly, the Exchange is proposing to amend its fee structure to reflect the incidental nature of the resulting SPAC business combination and to avoid treating companies undergoing similar business combinations disparately.

By contrast to a SPAC business combination, there are typically more significant limitations on the ability of the parties to a merger between two operating companies to make decisions about which entity will be the acquirer, including, for example, the desire to maintain the acquirer's SEC registration and concerns about how to present the combined entity to the market. As such, it is much more likely that the listing fee implications of how the transaction is structured would be a major consideration for the parties to a SPAC business combination than would be the case in a merger between two operating companies. As the implications of the proposed fee waivers for decisions relating to the transaction structures utilized by unlisted companies listing in connection with the acquisition of a SPAC are typically greater than for other companies listing in conjunction with merger transactions, the proposed waivers are not unfairly discriminatory.

Finally, the Exchange believes that it is subject to significant competitive forces, as described below in the Exchange's statement regarding the burden on competition.

For the foregoing reasons, the Exchange believes that the proposal is consistent with the Act.

B. Self-Regulatory Organization's Statement on Burden on Competition

The Exchange does not believe that the proposed rule change will impose any burden on competition that is not necessary or appropriate in furtherance of the purposes of the Act.

Intramarket Competition

The proposed waiver will be available to all similarly situated issuers on the same basis. The proposed waiver will address an anomalous discrepancy in fee treatment between business combinations of NYSE listed SPACs and companies that are not listed on a national securities exchange based solely on which entity is the legal survivor in the transaction. The Exchange does not believe that the proposed waivers will have any meaningful effect on the competition among issuers listed on the Exchange.

Intermarket Competition

The Exchange operates in a highly competitive market in which issuers can readily choose to list new securities on other exchanges and transfer listings to other exchanges if they deem fee levels at those other venues to be more favorable. Because competitors are free to modify their own fees in response, and because issuers may change their listing venue, the Exchange does not believe its proposed fee change can impose any burden on intermarket competition.

C. Self-Regulatory Organization's Statement on Comments on the Proposed Rule Change Received From Members, Participants, or Others

No written comments were solicited or received with respect to the proposed rule change.

III. Date of Effectiveness of the Proposed Rule Change and Timing for Commission Action

The foregoing rule change is effective upon filing pursuant to Section 19(b)(3)(A) [9] of the Act and subparagraph (f)(2) of Rule 19b–4 [10] thereunder, because it establishes a due, fee, or other charge imposed by the Exchange.

At any time within 60 days of the filing of such proposed rule change, the Commission summarily may temporarily suspend such rule change if it appears to the Commission that such action is necessary or appropriate in the public interest, for the protection of investors, or otherwise in furtherance of the purposes of the Act. If the Commission takes such action, the Commission shall institute proceedings under Section 19(b)(2)(B) [11] of the Act to determine whether the proposed rule change should be approved or disapproved.

IV. Solicitation of Comments

Interested persons are invited to submit written data, views, and arguments concerning the foregoing, including whether the proposed rule change is consistent with the Act. Comments may be submitted by any of the following methods:

Electronic Comments

- Use the Commission's internet comment form (*http://www.sec.gov/rules/sro.shtml*); or
- Send an email to *rule-comments@sec.gov.* Please include File Number SR–NYSE–2020–40 on the subject line.

Paper Comments

- Send paper comments in triplicate to Secretary, Securities and Exchange Commission, 100 F Street NE, Washington, DC 20549–1090.

All submissions should refer to File Number SR–NYSE–2020–40. This file number should be included on the subject line if email is used. To help the Commission process and review your comments more efficiently, please use only one method. The Commission will post all comments on the Commission's internet website (*http://www.sec.gov/rules/sro.shtml*). Copies of the submission, all subsequent amendments, all written statements with respect to the proposed rule change that are filed with the Commission, and all written communications relating to the proposed rule change between the Commission and any person, other than those that may be withheld from the public in accordance with the provisions of 5 U.S.C. 552, will be available for website viewing and printing in the Commission's Public Reference Room, 100 F Street NE, Washington, DC 20549, on official business days between the hours of 10:00 a.m. and 3:00 p.m. Copies of the filing also will be available for inspection and copying at the principal office of the Exchange. All comments received will be posted without change. Persons submitting comments are cautioned that we do not redact or edit personal identifying information from comment submissions. You should submit only information that you wish to make available publicly. All submissions should refer to File Number SR–NYSE–2020–40 and should be submitted on or before October 1, 2020.

For the Commission, by the Division of Trading and Markets, pursuant to delegated authority.[12]

J. Matthew DeLesDernier,

Assistant Secretary.

[FR Doc. 2020–20024 Filed 9–9–20; 8:45 am]

BILLING CODE 8011–01–P

[9] 15 U.S.C. 78s(b)(3)(A).

[10] 17 CFR 240.19b–4(f)(2).

[11] 15 U.S.C. 78s(b)(2)(B).

[12] 17 CFR 200.30–3(a)(12).

SECURITIES AND EXCHANGE COMMISSION

[Release No. 34–89765; File No. SR–CBOE–2020–014]

Self-Regulatory Organizations; Cboe Exchange, Inc.; Notice of Designation of Longer Period for Commission Action on Proceedings To Determine Whether To Approve or Disapprove a Proposed Rule Change To Adopt a Delta-Adjusted at Close Order Instruction

September 3, 2020.

On February 18, 2020, Cboe Exchange, Inc. (''Exchange'') filed with the Securities and Exchange Commission (''Commission''), pursuant to Section 19(b)(1) of the Securities Exchange Act of 1934 (''Act'') [1] and Rule 19b–4 thereunder,[2] a proposed rule change to adopt a Delta-Adjusted at Close order instruction that a User may apply to an order when entering it into the System for execution in an electronic or open outcry auction. The proposed rule change was published for comment in the **Federal Register** on March 9, 2020.[3] On April 13, 2020, the Commission designated a longer period within which to approve the proposed rule change, disapprove the proposed rule change, or institute proceedings to determine whether the proposed rule change should be disapproved.[4] On May 12, 2020, the Exchange submitted Amendment No. 1 to the proposed rule change.[5] On June 3, 2020, the Commission instituted proceedings to determine whether to approve or disapprove the proposed rule change, as modified by Amendment No. 1.[6] The Commission has received one comment on the proposed rule change.[7] Section 19(b)(2) of the Act [8] provides that, after initiating proceedings, the Commission shall issue an order approving or disapproving the proposed rule change not later than 180 days after the date of publication of notice of filing the proposed rule change. The Commission may extend the period for issuing an order approving or disapproving the proposed rule change, however, by not more than 60 days if the Commission determines that a longer period is appropriate and publishes the reasons for such determination. The proposed rule change was published for notice and comment in the **Federal Register** on March 9, 2020.[9] September 5, 2020 is 180 days from that date, and November 4, 2020 is 240 days from that date.

The Commission finds it appropriate to designate a longer period within which to issue an order approving or disapproving the proposed rule change so that it has sufficient time to consider the proposed rule change and the issues raised in the comment letters that have been submitted in connection therewith. Accordingly, the Commission, pursuant to Section 19(b)(2) of the Act,[10] the Commission designates November 4, 2020, as the date by which the Commission shall either approve or disapprove the proposed rule change (File No. CBOE–2020–014).

For the Commission, by the Division of Trading and Markets, pursuant to delegated authority.[11]

J. Matthew DeLesDernier,

Assistant Secretary.

[FR Doc. 2020–19944 Filed 9–9–20; 8:45 am]

BILLING CODE 8011–01–P

[1] 15 U.S.C. 78s(b)(1).

[2] 17 CFR 240.19b–4.

[3] *See* Securities Exchange Act Release No. 88312 (March 3, 2020), 85 FR 13686 (''Notice'').

[4] *See* Securities Exchange Act Release No. 88622, 85 FR 21490 (April 17, 2020).

[5] *See https://www.sec.gov/comments/sr-cboe-2020-014/srcboe2020014-7180918-216787.pdf.*

[6] *See* Securities Exchange Act Release No. 88997, 85 FR 35351 (June 9, 2020).

[7] *See* Letter from Kurt Eckert, Partner, Wolverine Execution Services, LLC, to Vanessa Countryman, Secretary, Commission, dated June 24, 2020, *available at https://www.sec.gov/comments/sr-cboe-2020-014/srcboe2020014-7343517-218670.pdf.*

[8] 15 U.S.C. 78s(b)(2).

[9] *See* Notice, *supra* note 3.

[10] *Id.*

[11] 17 CFR 200.30–3(a)(31).

SECURITIES AND EXCHANGE COMMISSION

[Release No. 34–89769; File No. SR–MIAX–2020–29]

Self-Regulatory Organizations; Miami International Securities Exchange, LLC; Notice of Filing and Immediate Effectiveness of a Proposed Rule Change To Amend Its Fee Schedule To Increase the Number of Additional Limited Service MIAX Express Interface Ports Available to Market Makers

September 4, 2020.

Pursuant to Section 19(b)(1) of the Securities Exchange Act of 1934 (''Act''),[1] and Rule 19b–4 thereunder,[2] notice is hereby given that on August 25, 2020, Miami International Securities Exchange, LLC (''MIAX Options'' or ''Exchange'') filed with the Securities and Exchange Commission (''Commission'') the proposed rule change as described in Items I, II, and III below, which Items have been prepared by the Exchange. The Commission is publishing this notice to solicit comments on the proposed rule change from interested persons.

I. Self-Regulatory Organization's Statement of the Terms of Substance of the Proposed Rule Change

The Exchange is filing a proposal to amend the MIAX Options Fee Schedule (the ''Fee Schedule'') to increase the number of additional Limited Service MIAX Express Interface (''MEI'') Ports available to Market Makers.[3] The Exchange does not propose to amend the fees for additional Limited Service MEI Ports.

The text of the proposed rule change is available on the Exchange's website at *http://www.miaxoptions.com/rule-filings,* at MIAX's principal office, and at the Commission's Public Reference Room.

II. Self-Regulatory Organization's Statement of the Purpose of, and Statutory Basis for, the Proposed Rule Change

In its filing with the Commission, the Exchange included statements concerning the purpose of and basis for the proposed rule change and discussed any comments it received on the proposed rule change. The text of these statements may be examined at the places specified in Item IV below. The Exchange has prepared summaries, set forth in sections A, B, and C below, of the most significant aspects of such statements.

A. Self-Regulatory Organization's Statement of the Purpose of, and Statutory Basis for, the Proposed Rule Change

1. Purpose

The Exchange proposes to amend the Fee Schedule to offer two (2) additional Limited Service MEI Ports to Market Makers. The Exchange does not propose to amend the fees charged for the additional Limited Service MEI Ports.

The Exchange initially filed the proposal to increase the number of Limited Service MEI Ports available to Market Makers on June 30, 2020, with no change to the actual fee amounts being charged.[4] The First Proposed Rule Change was published for comment in the **Federal Register** on July 20, 2020.[5] On August 25, 2020, the Exchange

[1] 15 U.S.C. 78s(b)(1).

[2] 17 CFR 240.19b–4.

[3] The term ''Market Makers'' refers to Lead Market Makers (''LMMs''), Primary Lead Market Makers (''PLMMs''), and Registered Market Makers (''RMMs'') collectively. *See* Exchange Rule 100.

[4] *See* Securities Exchange Act Release No. 89317 (July 14, 2020), 85 FR 43918 (July 20, 2020) (SR–MIAX–2020–23) (the ''First Proposed Rule Change'').

[5] *Id.*

withdrew the First Proposed Rule Change.[6]

The Exchange notes that the First Proposed Rule Change did not receive any comment letters; however, the Exchange has determined to refile its proposal to increase the number of Limited Service MEI Ports available to Market Makers (without increasing the actual fee amounts) to provide further clarification regarding the Exchange's annual cost for providing additional Limited Service MEI Ports.

Currently, MIAX assesses monthly MEI Port Fees on Market Makers based upon the number of MIAX matching engines[7] used by the Market Maker. Market Makers are allocated two (2) Full Service MEI Ports[8] and two (2) Limited Service MEI Ports[9] per matching engine to which they connect. The Full Service MEI Ports, Limited Service MEI Ports, and the additional Limited Service MEI Ports all include access to MIAX's primary and secondary data centers and its disaster recovery center. Market Makers may request additional Limited Service MEI Ports for which they will be assessed the existing $100 monthly fee for each additional port they request. This fee has been unchanged since 2016.[10]

The Exchange originally added the Limited Service MEI Ports to enhance the MEI Port connectivity made available to Market Makers, and has subsequently made additional Limited Service MEI Ports available to Market Makers.[11] Limited Service MEI Ports have been well received by Market Makers since their addition. The Exchange now proposes to offer to Market Makers the ability to purchase an additional two (2) Limited Service MEI Ports per matching engine over and above the current six (6) additional Limited Service MEI Ports per matching engine that are available for purchase by Market Makers. The Exchange proposes making a corresponding change to footnote 30 of the Exchange's Fee Schedule to specify that Market Makers will now be limited to purchasing eight (8) additional Limited Service MEI Ports per matching engine, for a total of ten (10) per matching engine. All fees related to MEI Ports shall remain unchanged and Market Makers that voluntarily purchase the additional Limited Service MEI Ports will remain subject to the existing $100 monthly fee per port.

The Exchange is increasing the number of additional Limited Service MEI Ports because the Exchange is expanding its network. This network expansion is necessary due to increased customer demand and increased volatility in the marketplace, both of which have translated into increased message traffic rates across the network. Consequently, this network expansion, which increases the number of switches supporting customer facing systems, is necessary in order to provide sufficient access to new and existing Members,[12] to maintain a sufficient amount of network capacity head-room, and to continue to provide the same level of service across the Exchange's low-latency, high-throughput technology environment.

Currently, the Exchange has 8 network switches that support the entire customer base of MIAX. The Exchange plans to increase this to 10 switches, which will increase the number of available customer ports by 25%. This increase in the number of available customer ports will enable the Exchange to continue to provide sufficient and equal access to MIAX Systems to all Members. Absent the proposed increase in available MEI Ports, the Exchange projects that its current inventory will be depleted and it will lack sufficient capacity to continue to meet Members' access needs.

2. Statutory Basis

The Exchange believes that its proposal to amend its Fee Schedule is consistent with Section 6(b) of the Act[13] in general, and furthers the objectives of Section 6(b)(5) of the Act[14] in that it is designed to promote just and equitable principles of trade, to remove impediments to and perfect the mechanism of a free and open market and a national market system, and, in general to protect investors and the public interest and is not designed to permit unfair discrimination between customers, issuers, brokers and dealers.

The Exchange believes that its proposal is consistent with the objectives of Section 6(b)(5) of the Act[15] because the proposed additional Limited Service MEI Ports will be available to all Market Makers and the current fees for the additional Limited Service MEI Ports apply equally to all Market Makers regardless of type, and access to the Exchange is offered on terms that are not unfairly discriminatory. The Exchange is proposing to increase the number of available Limited Service MEI Ports because the Exchange is expanding its network. This network expansion is necessary due to increased customer demand and increased volatility in the marketplace, both of which have translated into increased message traffic rates across the network. Consequently, this network expansion, which increases the number of switches supporting customer facing systems, is necessary in order to provide sufficient and equal access to new and existing Members, to maintain a sufficient amount of network capacity head-room, and to continue to provide the same level of service across the Exchange's low-latency, high-throughput technology environment.

Currently, the Exchange has 8 network switches that support the entire customer base of MIAX. The Exchange plans to increase this to 10 switches, which will increase the number of available customer ports by 25%. This increase in the number of available customer ports will enable the Exchange to continue to provide sufficient and equal access to MIAX Systems for all Members. Absent the proposed increase in available MEI Ports, the Exchange projects that its current inventory will be depleted and it will lack sufficient

[6] *See* Comment Letter from Christopher Solgan, VP, Senior Counsel, the Exchange, dated August 24, 2020, notifying the Commission that the Exchange will withdraw the First Proposed Rule Change.

[7] A ''matching engine'' is a part of the MIAX electronic system that processes options quotes and trades on a symbol-by-symbol basis. Some matching engines will process option classes with multiple root symbols, and other matching engines will be dedicated to one single option root symbol (for example, options on SPY will be processed by one single matching engine that is dedicated only to SPY). A particular root symbol may only be assigned to a single designated matching engine. A particular root symbol may not be assigned to multiple matching engines. *See* Fee Schedule, Section 5)d)ii), note 29.

[8] Full Service MEI Ports provide Market Makers with the ability to send Market Maker quotes, eQuotes, and quote purge messages to the MIAX System. Full Service MEI Ports are also capable of receiving administrative information. Market Makers are limited to two Full Service MEI Ports per matching engine. *See* Fee Schedule, Section 5)d)ii), note 27.

[9] Limited Service MEI Ports provide Market Makers with the ability to send eQuotes and quote purge messages only, but not Market Maker Quotes, to the MIAX System. Limited Service MEI Ports are also capable of receiving administrative information. Market Makers initially receive two Limited Service MEI Ports per matching engine. *See* Fee Schedule, Section 5)d)ii), note 28.

[10] *See* Securities Exchange Act Release No. 79666 (December 22, 2016), 81 FR 96133 (December 29, 2016) (SR–MIAX–2016–47).

[11] *See* Securities Exchange Act Release Nos. 70137 (August 8, 2013), 78 FR 49586 (August 14, 2013) (SR–MIAX–2013–39); 70903 (November 20, 2013), 78 FR 70615 (November 26, 2013) (SR–MIAX–2013–52); 78950 (September 27, 2016), 81 FR 68084 (October 3, 2016) (SR–MIAX–2016–33); and 79198 (October 31, 2016), 81 FR 76988 (November 4, 2016) (SR–MIAX–2016–37).

[12] The term ''Member'' means an individual or organization approved to exercise the trading rights associated with a Trading Permit. Members are deemed ''members'' under the Exchange Act. *See* Exchange Rule 100.

[13] 15 U.S.C. 78f(b).

[14] 15 U.S.C. 78f(b)(5).

[15] 15 U.S.C. 78f(b)(5).

capacity to continue to meet Members' access needs. Further, the Exchange notes the decision of whether to purchase two additional Limited Service MEI Ports is completely optional and it is a business decision for each Market Maker to determine whether the additional Limited Service MEI Ports are necessary to meet their business requirements.

The Exchange further believes that the availability of the additional Limited Service MEI Ports is equitable and not unfairly discriminatory because it will enable Market Makers to maintain uninterrupted access to the MIAX System and consequently enhance the marketplace by helping Market Makers to better manage risk, thus preserving the integrity of the MIAX markets, all to the benefit of and protection of investors and the public as a whole.

The Exchange also believes that its proposal is consistent with Section 6(b)(4) of the Act because only Market Makers that voluntarily purchase the two additional Limited Service MEI Ports will be charged the existing $100 monthly fee per port, which has been unchanged since 2016.[16] The Exchange does not propose to amend the fees applicable to additional Limited Service MEI Ports which have been previously filed with the Commission and become effective after notice and public comment.[17] As stated above, the Exchange proposes to expand its network by making available two additional Limit Service MEI Ports due to increased customer demand and increased volatility in the marketplace, both of which have translated into increased message traffic rates across the network. The cost to expand the network in this manner is greater than the revenue the Exchange anticipates the additional Limited Service MEI Ports will generate. Specifically, the Exchange estimates it will incur a one-time cost of approximately $175,000 in capital expenditures on hardware, software, and other items to expand the network to make available the two additional Limited Service MEI Ports. This estimated cost also includes expense associated with providing the necessary engineering and support personnel to transition those Market Makers who wish to acquire the two additional Limited Service MEI Ports.

The Exchange projects that approximately six or seven Market Makers will elect to purchase the additional Limited Service MEI Ports, which will be subject to the existing monthly fee of $100 per port. Accordingly, the Exchange projects that the annualized revenue from the two additional Limited Service MEI Ports will be approximately $16,800 (assuming that seven Market Makers purchase the two additional Limited Service MEI Ports). Therefore, the Exchange's cost in expanding its network to provide its Members with the two additional Limited Service MEI Ports—approximately $175,000—is clearly greater than the anticipated annualized revenue the Exchange expects to bring in from the two additional Limited Service MEI Ports—approximately $16,800. Further, the Exchange anticipates it will incur approximately $100,371 in annual ongoing operating expense in order to support the expanded network and the two additional Limited Service MEI Ports. Thus, the Exchange is not generating a supra-competitive profit from the provision of these two additional Limited Service MEI Ports. In fact, even excluding the one-time capital expenditure cost of $175,000, the Exchange anticipates generating an annual loss from the provision of these two additional Limited Service MEI Ports of ($83,571)—that is, $16,800 in revenue minus $100,371 in expense equates to a loss of ($83,571) to support the additional ports annually.

Subjecting the two additional Limited Service MEI Ports to the existing $100 monthly fee per port is also designed to encourage Market Makers to be efficient with their port usage, thereby resulting in a corresponding increase in the efficiency that the Exchange would be able to realize in managing its aggregate costs for providing the two additional ports. There is no requirement that any Market Maker maintain a specific number of Limited Service MEI Ports and a Market Maker may choose to maintain as many or as few of such ports as each Market Maker deems appropriate.

Finally, subjecting the two additional Limited Service MEI Ports to the existing $100 monthly fee will help to encourage Limited Service MEI Port usage in a way that aligns with the Exchange's regulatory obligations. As a national securities exchange, the Exchange is subject to Regulation Systems Compliance and Integrity (''Reg. SCI'').[18] Reg. SCI Rule 1001(a) requires that the Exchange establish, maintain, and enforce written policies and procedures reasonably designed to ensure (among other things) that its Reg. SCI systems have levels of capacity adequate to maintain the Exchange's operational capability and promote the maintenance of fair and orderly markets.[19] By encouraging Members to be efficient with their usage of Limited MEI Ports, the current fee that will continue to apply to the proposed two (2) additional Limited Service MEI Ports will support the Exchange's Reg. SCI obligations in this regard by ensuring that unused ports are available to be allocated based on individual Members needs and as the Exchange's overall order and trade volumes increase.

B. Self-Regulatory Organization's Statement on Burden on Competition

MIAX does not believe that the proposed rule change will result in any burden on competition that is not necessary or appropriate in furtherance of the purposes of the Act, as amended. The proposed rule change will not impose a burden on competition but will benefit competition by enhancing the Exchange's ability to compete by providing additional services to market participants. It is not intended to address a competitive issue. Rather, the proposed increase in the number of additional Limited Service MEI Ports available per Market Maker is intended to allow the Exchange to increase its inventory of MEI Ports to meet increased Member demand. The Exchange is increasing the number of available additional Limited Service MEI Ports in response to Market Maker demand for increased connectivity to the MIAX System. The Exchange's current inventory may soon be insufficient to meet those needs. Again, the Exchange is not proposing to amend the fees for MEI Ports, just to increase the number of MEI Ports available per Market Maker. The Exchange also does not believe that the proposed rule change will impose a burden on intramarket competition because the two additional Limited Service MEI Ports will be available to all Market Makers on an equal basis. It is a business decision of each Market Maker whether to pay for the additional Limited Service MEI Ports.

C. Self-Regulatory Organization's Statement on Comments on the Proposed Rule Change Received From Members, Participants, or Others

Written comments were neither solicited nor received.

III. Date of Effectiveness of the Proposed Rule Change and Timing for Commission Action

The foregoing rule change has become effective pursuant to Section

[16] *See supra* note 10.

[17] *See supra* notes 10 and 11.

[18] 17 CFR 242.1000–1007.

[19] 17 CFR 242.1001(a).

19(b)(3)(A)(ii) of the Act,[20] and Rule 19b–4(f)(2)[21] thereunder. At any time within 60 days of the filing of the proposed rule change, the Commission summarily may temporarily suspend such rule change if it appears to the Commission that such action is necessary or appropriate in the public interest, for the protection of investors, or otherwise in furtherance of the purposes of the Act. If the Commission takes such action, the Commission shall institute proceedings to determine whether the proposed rule should be approved or disapproved.

IV. Solicitation of Comments

Interested persons are invited to submit written data, views, and arguments concerning the foregoing, including whether the proposed rule change is consistent with the Act. Comments may be submitted by any of the following methods:

Electronic Comments

- Use the Commission's internet comment form (*http://www.sec.gov/rules/sro.shtml*); or
- Send an email to *rule-comments@sec.gov.* Please include File Number SR–MIAX–2020–29 on the subject line.

Paper Comments

- Send paper comments in triplicate to Secretary, Securities and Exchange Commission, 100 F Street NE, Washington, DC 20549–1090.

All submissions should refer to File Number SR–MIAX–2020–29. This file number should be included on the subject line if email is used. To help the Commission process and review your comments more efficiently, please use only one method. The Commission will post all comments on the Commission's internet website (*http://www.sec.gov/rules/sro.shtml*). Copies of the submission, all subsequent amendments, all written statements with respect to the proposed rule change that are filed with the Commission, and all written communications relating to the proposed rule change between the Commission and any person, other than those that may be withheld from the public in accordance with the provisions of 5 U.S.C. 552, will be available for website viewing and printing in the Commission's Public Reference Room, 100 F Street NE, Washington, DC 20549 on official business days between the hours of 10:00 a.m. and 3:00 p.m. Copies of the filing also will be available for inspection and copying at the principal office of the Exchange. All comments received will be posted without change. Persons submitting comments are cautioned that we do not redact or edit personal identifying information from comment submissions. You should submit only information that you wish to make available publicly. All submissions should refer to File Number SR–MIAX–2020–29, and should be submitted on or before October 1, 2020.

For the Commission, by the Division of Trading and Markets, pursuant to delegated authority.[22]

J. Matthew DeLesDernier,

Assistant Secretary.

[FR Doc. 2020–20021 Filed 9–9–20; 8:45 am]

BILLING CODE 8011–01–P

[20] 15 U.S.C. 78s(b)(3)(A)(ii).

[21] 17 CFR 240.19b–4(f)(2).

[22] 17 CFR 200.30–3(a)(12).

SECURITIES AND EXCHANGE COMMISSION

[Release No. 34–89760; File No. SR–LCH SA–2020–004]

Self-Regulatory Organizations; LCH SA; Notice of Filing of Proposed Rule Change Relating to the Clearing of Single Name Credit Default Swaps Referencing Monoline Insurance Companies and the Amendment of LCH SA's Rules in Accordance With its Risk Policies

September 3, 2020.

Pursuant to Section 19(b)(1) of the Securities Exchange Act of 1934 (''Act'')[1] and Rule 19b–4 thereunder[2] notice is hereby given that on August 28, 2020, Banque Centrale de Compensation, which conducts business under the name LCH SA (''LCH SA''), filed with the Securities and Exchange Commission (''Commission'') the proposed rule change described in Items I, II and III below, which Items have been prepared primarily by LCH SA. The Commission is publishing this notice to solicit comments on the proposed rule change from interested persons.

I. Clearing Agency's Statement of the Terms of Substance of the Proposed Rule Change

Banque Centrale de Compensation, which conducts business under the name LCH SA (''LCH SA''), is proposing to amend its rules to permit the clearing of single name credit default swaps (''CDS'') referencing monoline insurance companies. LCH SA is also proposing to revise a number of its rules to incorporate new terms and to make conforming and clarifying amendments in order to implement a number of changes required by LCH Group Holdings Limited (''LCH Group'') Risk Policies to which LCH SA adheres. The text of the proposed rule change has been annexed as Exhibit 5.

II. Clearing Agency's Statement of the Purpose of, and Statutory Basis for, the Proposed Rule Change

In its filing with the Commission, LCH SA included statements concerning the purpose of and basis for the proposed rule change and discussed any comments it received on the proposed rule change. The text of these statements may be examined at the places specified in Item IV below. LCH SA has prepared summaries, set forth in sections A, B, and C below, of the most significant aspects of these statements.

A. Clearing Agency's Statement of the Purpose of, and Statutory Basis for, the Proposed Rule Change

1. Purpose

The Proposed Rule Change will permit LCH SA to clear single name CDS referencing monoline insurance companies, *i.e.* an insurance company that provides coverage for a specific kind of insurable risk. Separately, by revising a number of LCH SA's rules to incorporate new terms and to make conforming and clarifying amendments, the Proposed Rule Change will implement a number of changes required by LCH Group Holdings Limited (''LCH Group'') Risk Policies to which LCH SA adheres and further enhance certain aspects of the CDS Clearing Service, including the CDS Default Management Process.[3]

The LCH Group Risk Policies also include a few changes that apply only to LCH Ltd and because of that, those changes are not describes in this narrative.

(i) Single Name CDS Referencing a Monoline Insurance Company

LCH SA is proposing to introduce clearing of single name CDS transactions referencing monoline insurance companies. Although indices (*e.g.* CDX.NA.IG and CDS.NA.HY) that

[1] 15 U.S.C. 78s(b)(1).

[2] 17 CFR 240.19b–4.

[3] The proposed amendments are set out in in the following: (i) CDS Clearing Rule Book (''Rule Book''); (ii) CDS Clearing Supplement (''Supplement''); (iii) CDS Clearing Procedures (''Procedures''); (iv) Reference Guide: CDS Margin Framework; and (v) CDSClear Default Fund Methodology (together with the Reference Guide: CDS Margin Framework, the ''CDSClear Risk Methodology''). All capitalized terms not defined herein have the same definition as the Rule Book, Supplement or Procedures, as applicable.

contain monoline insurance companies as constituents are clearable by LCH SA, single name CDS transactions referencing monoline insurers currently are not eligible for clearing. To permit participants to submit for clearing single name CDS referencing a monoline insurance company, LCH SA proposes to modify its CDS Clearing Supplement and Section 4 of the CDS Clearing Procedures, Eligibility Requirements.

In this regard, in Part B of the Supplement, Section 2.3 (*Single Name Cleared Transaction Confirmation*), paragraph (g) is proposed to be amended to include a reference to the ''Additional Provisions for Monoline Insurer Reference Entities'', published on September 15, 2014 (the ''Monoline Supplement'') by the International Swaps and Derivatives Association, Inc. (''ISDA''). As a result of this change, the Monoline Supplement would be applicable to any Single Name Cleared Transaction that is a monoline insurer in the relevant confirmation.

In addition, Section 2.2 (*Index Cleared Transaction Confirmation*), paragraph (f), sub-paragraphs (iii) and (iv) are proposed to be amended to clarify that the ''Monoline Supplement'' will apply to each Index Cleared Transaction Confirmation referencing a Markit CDX in which the Reference Entity is identified as ''monoline'' in the Index Annex published by Markit Group Limited. Further, the relevant paragraph on ''Monoline Insurer as Reference Entity'' would be deleted from the applicable CDX Standard Terms Supplement and replaced with a direct reference to the Monoline Supplement, which will apply to each relevant Reference Entity identified as a ''monoline''. LCH SA is proposing this change for the avoidance of doubt, since it is not clear whether the Monoline Supplement is specified as ''Applicable'' in the Index Annex.

Finally, Section 4.1 of the Procedures, paragraph (c)(iii)(B)(5) is proposed to be amended to provide for an additional eligibility requirement, pursuant to which only single names which are ''Standard North American Corporate'' referencing a monoline insurance entity for which the Monoline Supplement is specified as ''Applicable'' are eligible for clearing by LCH SA.[4]

(ii) Implementation of LCH Group Risk Policies

LCH SA is proposing several actions to implement changes in LCH Group's Risk policies (LCH Group Financial Resource Adequacy policy, LCH Group Collateral Risk policy, LCH Group Counterparty Credit Risk policy). In particular, LCH SA is proposing to introduce two new margins to address additional financial risks to which Clearing Members may be exposed in identified circumstances: (1) Legal Entity Identifier Margin; and (2) Stress Test Loss Over Additional Margin/Net Capital Ratio Margin. In addition, LCH SA is proposing to add a stress test to non-cash collateral.

(a) Legal Entity Identifier Margin

The LCH Group Financial Resource Adequacy policy (''FRAP'') requires that enough margins be held to cover the potential loss from any member (including clients of that member). Some members have for operational or historical reasons been set in LCH SA's systems as two different members although the legal entity and legal membership are only one. In most cases, because margins are calculated by margin account, given the absence of netting between the two accounts, this would translate into superior margins. However, the current framework could potentially miss some concentration effects that would increase the overall liquidation costs as these two accounts would be liquidated simultaneously. In order to cover these cases, it was recommended by LCH SA Second Line Risk team to tackle existing shortfalls in the margin calculation in order to ensure an appropriate margin coverage in line with section 4 and 5 of the FRAP.

So, as described in Section 6.2 of the Reference Guide: CDS Margin Framework, CDSClear is proposing the introduce a legal Entity Identifier Margin (''LEI Margin''). The LEI Margin would cover that risk by charging the incremental risk, if any, to the House account of the Clearing Member. The LEI Margin is calculated using an algorithm, approved by the board of directors of LCH SA following consultation with the Risk Committee, based on the Open Positions registered in the Margin Accounts of one or more Clearing Members identified by the same LEI.

(b) Stress Test Loss Over Additional Margin/Net Capital Ratio Margin

The Counterparty Credit Risk policy requires that each clearing member and clearing member group be subject to a uncovered stress losses over net capital threshold. As a result, CDSClear is introducing this new margin in its section 6.3 of LCH SA Reference Guide: CDS Margin Framework, the purpose of Stress Test Loss Over Additional Margin/Net Capital Ratio Margin (''STLOAM/Net Capital Ratio Margin'') is to assure that Members have enough capital to absorb losses that could materialize under an extreme but plausible market risk scenario. As a matter of policy, LCH SA believes that stress risk of a Member over the Collateral already deposited (*i.e.,* Initial Margin, Add-ons and Default Fund Contribution) should not exceed 30 percent (30%) of the Member's net capital. If it does, the difference is then charged to the Clearing Member under the ''STLOAM/Net Capital Ratio Margin'' to bring this ratio below 30 percent (30%).

In addition to the above amendments of the LCH SA Reference Guide CDS Margin Framework, to implement these two new margins, LCH SA also proposes to amend Section 1.1.1 of the Rule Book to add ''Legal Entity Identifier Margin'' and ''Stress Test Loss Over Additional Margin/Net Capital Ratio Margin'' as defined terms and to make a reference to these two defined terms in the current definition of ''Margin''.

As with other Margin, the LEI Margin and the STLOAM/Net Capital Ratio Margin are defined by making reference to the amount calculated in accordance with Section 2 of the Procedures. In this regard, therefore, Section 2 of the Procedures are proposed to be amended by adding new paragraphs 2.12 (*Legal Entity Identifier Margin*) and 2.14 (*Stress Test Loss Over Additional Margin/Net Capital Ratio Margin*), which provide describe these new margins and by adding a reference to these new margins in paragraph 2.2 (a) (*Margin Requirement*).

(c) Technical Amendments With Regard to Margin

LCH SA is proposing to make corrections to Section 1.1.1 of the Rule Book by adding the definition of the ''Liquidity and Concentration Risk Margin'', which is an existing margin as described in Section 2 of the Procedures but was erroneously omitted in Section 1.1.1 of the Rule Book. A reference to Liquidity and Concentration Risk Margin will also be added to the definition of ''Margin''.

Further, LCH SA proposes to (1) add the definition of a new defined term ''Vega Margin'' to Section 1.1.1 of the Rule Book, (2) make a reference to the Vega Margin to the definitions of ''Margin'' and ''Initial Margin'' in the Rule Book, and (3) add the description of such margin in a new sub-paragraph (g) to Section 2.7 of the Procedures for consistency and to provide greater transparency to LCH SA's Clearing

[4] The proposed introduction of clearing single names CDS referencing a monoline insurer requires no change in LCH SA's margin methodology and has no impact on either the Margin or the Stress Test framework of CDSClear.

Members. Vega Margin is currently captured by the description of the ''Spread Margin'' which provides that the volatility variations and fluctuations referred to in sub-paragraph (a) (*Spread Margin*) of Section 2.7 of the Procedures are at-the-money volatility variations. By separating Vega Margin from Spread Margin and other margins, the reports provided Clearing Members will be more detailed.

As described in proposed Section 2.7(g), Vega Margin ''covers the risk of future price fluctuations of an Index Swaption Cleared Transaction in case of unfavorable deformations of the volatility surface, when liquidating a Default Clearing Member's portfolio of House Cleared Transactions or Non-Ported Cleared Transactions.''

A reference to the Vega Margin is also added to paragraph 2.2 (a) (*Margin Requirement*) of Section 2 of the Procedures.

LCH SA also proposes to remove the defined term of ''Margin Account Uncovered Risk'' from Section 1.1.1 of the Rule Book, as this defined term is no longer used in the Rule Book and existing references to this defined term in Section 6 of the Procedures are redundant with the reference to the ''Group Member Uncovered Risk''. References to the Margin Account Uncovered Risk will also be removed from paragraph 6.4 (*Calculation of the CDS Default Fund Amount*) of Section 6 of the Procedures.

Finally, the order in which the Margins are listed in the definition of ''Margin'' in Section 1.1.1 of the Rule Book and paragraph 2.2 (a) (*Margin Requirement*) of Section 2 of the Procedures will be amended to be consistent with the order of description of each Margin as provided for in paragraphs 2.7 *et seq.* of Section 2 of the Procedures.

(d) Non-Cash Collateral Stress Test

Following an examination of LCH SA, the ACPR recommended that LCH SA revise its policies and procedures to assure that sovereign debt risk would be better monitored and that non cash collateral be integrated in the stress scenarios. For this purpose, the Appendix 4 of the FRAP was amended to add ''margin collateral'' in the scope and definition of the Stress Test Loss (''STL'') in order to ensure that both clearing and collateral are stressed jointly in the cover 2 consideration. The FRAP is also amended to specify that the Stress Testing Regime must be independently validated and reviewed at least annually in consultation with the LCH SA Risk Committee. LCH Group Collateral Risk policy (Section 8 Paragraph 59) is also amended in order to include the reference to this modification and definition of the STL. LCH Group Collateral Risk policy is also including a number of minor changes for clarification purposes only.

LCH SA decided to apply stress scenarios to non-cash collateral securities posted to cover margin requirements and include the potential stressed loss over the collateral haircut in the sizing of the Default Fund. Any stressed loss beyond the haircut already applied to collateral would be added into the Stress Test Loss Over Initial Margins calculation, and would be reflected in the CDSClear Default Fund calculation (Section 1.1 of the CDSClear Default Fund Methodology) as well the margins related to stress risk such as the Credit Quality Margin (Section 3.1 of the CDSClear Default Fund Methodology) and the Default Fund Additional Margin (Section 3.3 of the CDSClear Default Fund Methodology). To implement this added stress test, LCH SA also proposes to amend the definition of ''Group Member Uncovered Risk'' in Section 1.1.1 of the Rule Book by inserting a reference to the stress-tested potential loss that would be incurred in relation to Collateral (in addition to the existing reference to Open Positions). Group Member Uncovered Risk is used to calculate the funded portion of the CDS Default Fund Amount, in accordance with Article 4.4.1.2 of the Rule Book.

(e) Internal Credit Scores

The Appendix 4 of the FRAP is proposed to be modified to clarify that, in circumstances in which a Clearing Member group comprises affiliate members with different Internal Credit Scores (''ICS''), the Member group exposure as defined by the Credit Team will be subject to the ICS clearing limit associated with the largest exposure. The ICS of a Clearing Member is used as an input in different margin add-ons calculations (such as the Default Fund Additional Margin (''DFAM''), some of which are calculated at the group Clearing Member level. This proposed c clarifies that, in the event a Clearing Member group includes various affiliates having a different ICS, the margin add-on calculations will be made using the ICS of the affiliate having the largest exposure.

Section 4.3 of LCH Group Counterparty Credit Risk policy is modified to specify in the paragraph 27 that any change to Clearing Member's ICS and application of any related additional margin are both approved by the LCH SA Executive Risk Committee (''ERCo'') with additional minor amendments clarifying that the LCH SA team referred to is the Credit Risk Team.

(f) CDS Default Management Process and Early Termination

LCH SA proposes to make a number of amendments to the Rule Book and Procedures for the purpose of enhancing some aspects of the CDS Default Management Process and Early Termination and making other amendments, corrections and clarifications. These amendments to LCH SA's internal governance relating to default management risk were identified following fire drills run by LCH SA.

Article 4.3.3.1 of the Rule Book identifies the resources available to LCH SA to be used to cover any Damage incurred by LCH SA in relation to an Event of Default arising in respect of a Clearing Member. LCH SA proposes to amend Article 4.3.3.1 by adding a new resource in a new indent (IV) of sub-paragraph (b) of paragraph (i), pursuant to which LCH SA will be entitled to use any remaining House collateral of the Defaulting Clearing Member transferred in respect of other LCH SA's clearing services to reduce or cover losses attributed to the liquidated Client Cleared Transactions of the Defaulting Clearing Member, to the extent such collateral is not applied in the context of such other clearing services in accordance with the rules applicable to such other clearing services. Indents of sub-paragraph (b) of paragraph (i) will be renumbered from (I) to (IV) and indents of sub-paragraph (a) of paragraph (i) from (I) to (II). LCH SA is also proposing to specify that the use of the resource described in indent (II) of sub-paragraph (b) of paragraph (i) is subject to the declaration of default of the relevant Clearing Member in respect of the other clearing services to be consistent with the provisions of indent (II) of sub-paragraph (a) of paragraph (i).

In addition, a reference to a Clearing Notice will be added to Clauses 4.3.1 and 4.3.2 of Appendix 1 (*CDS Default Management Process*) of the Rule Book. The Clearing Notice describes the conditions applicable to the notification of the identity of the Client's Backup Clearing Member by a Client and the consent to be provided by the appointed Backup Clearing Member.

LCH SA also proposes to amend Clause 8 (*Early Termination*) of Appendix 1 of the Rule Book to introduce a number of enhancements and clarifications. Clause 8 of Appendix 1 provides for the service closure process in respect of the CDS Clearing Service which is the last step in the default management process applied by

LCH SA in the event of a default occurring in respect of one or several Clearing Member(s). Since the calculation of the Margin Repayment Amounts occurs before the calculation of the LCH Repayments Amounts, Clause 8.5 and Clause 8.6 have been reorganized so that they adequately reflect the order in which these amounts are calculated. Consequently, Clause 5 will be entitled ''Margin Repayment Amounts'' and the provisions dealing with the calculation of the LCH Repayment Amounts will be moved to the following Clause 8.6, ''LCH Repayment Amounts'' including also notification details on the LCH Repayment Amounts.

LCH SA further proposes to provide for the possible liquidation in Euro of any Non-Defaulting Clearing Member's Collateral other than Euro denominated Cash Collateral provided that the CDS Repayment Amount calculated by LCH SA is a Negative CDS Repayment Amount and the relevant Non-Defaulting Clearing Member has not already paid such amount. Where there is a Positive CDS Repayment Amount or a Discounted CDS Repayment Amount, LCH SA will not liquidate the Collateral other than Euro denominated Cash Collateral and will redeliver or repay such Collateral in accordance with the proposed amended Clauses 8.5 and 8.7 of Appendix 1 of the Rule Book.

LCH SA, therefore, is proposing to make a distinction in the calculation of the Margin Repayment Amounts which will include, or not, the Euro amount resulting from the liquidation in Euro of the non-Euro denominated Cash Collateral, depending on the calculated CDS Repayment Amount in accordance with the proposed amended Clause 8.5.2 of Appendix 1. In the case of a Positive CDS Repayment Amount or a Discounted CDS Repayment Amount, the Margin Repayment Amount will take into account the value of Euro denominated Cash Collateral recorded in the relevant Collateral Account since any Collateral other than Euro denominated Cash Collateral will be redelivered or repaid by LCH SA in accordance with amended Clause 8.7. In the case of a Negative CDS Repayment Amount, the Margin Repayment Amount will take into account the value of Euro denominated Cash Collateral recorded in the relevant Collateral Account and any Euro amount resulting from the liquidation in Euro of the Collateral other than Cash Collateral denominated in Euro. Clause 8.1.4 will be amended to reflect this change.

Since the Collateral other than Euro denominated Cash Collateral will be either liquidated in Euro and taken into account in the calculation of the relevant Margin Repayment Amount in accordance with proposed amended Clause 8.5 or repaid or redelivered to the Clearing Member in accordance with proposed amended Clause 8.7, the scope of Clause 8.10 on conversion is proposed to be limited to the calculation made under Clause 8.2 in respect of the CDS Repayment Amounts for which LCH SA may need to convert USD denominated amounts into Euro. The timing provided for Clause 8.10 is also proposed to be aligned with the timing provided for Clause 8.3 on the price sources to be used for the purpose of calculating CDS Repayment Amounts.

Clause 8.3 is proposed to be amended to change the order among price sources to reflect what would happen in practice. Finally, it is proposed to amend Clause 8.6 to correct an inconsistency between applicable timings provided for in Clauses 8.3 and 8.6. As a result, the notification of the LCH Repayment Amounts is proposed to be made by no later than the end of the second Business Day following the Early Termination Trigger Date. The current notification deadline could not be achieved in practice as it is set at 15.00 on the Early Termination Trigger Date or on the first Business Day following the Early Termination Trigger Date, whereas the calculation of a CDS Repayment Amount, which is taken into account in the calculation of a LCH Repayment Amount, is based on the prices determined as at the end of the Business Day following the Early Termination Trigger Date in accordance with Clause 8.3 of Appendix 1.

(g) Amendments Related to Disciplinary Measures

LCH SA proposes to add a new measure, which would be available in the event of any repetitive failures to submit prices as part of the price submission procedure by a Clearing Member, in Section 8 of the Procedures. LCH SA's risk model depends on the accuracy of the market data that it receives from Clearing Members. Although the failure to submit prices is not an issue among the current eleven market-maker CDSClear Clearing Members, the amendment is intended to anticipate potential failures by Clearing Members admitted as General Members as their number grows and assure that LCH SA has the authority to discipline a Clearing Member that repeatedly fails to provide timely and accurate pricing data.

This additional measure consists in increasing the relevant Clearing Member's Contribution for the next monthly calculation of each Clearing Member's Contribution Requirement by an amount equal to the aggregate amount of fines to be incurred for such failures occurring each Price Contribution Day during the month following such monthly calculation. Paragraph 8.3 (*Immediate Measure*), paragraph (a) of Section 8 of the Procedures has therefore been amended to provide for this new measure in new indent (ii) and the provisions dealing with the fine that may be imposed for a failure to provide prices has been moved from the beginning of Paragraph 8.3 (a) to new indent (i). Paragraphs 8.3 (b) and (c) will be amended to take into account the changes made to paragraph (a), including the use of the new defined term ''Price Alleged Breach''.

A reference to Section 8 of the Procedures has been added at the beginning of Article 4.4.1.3 of the Rule Book as the calculation of a Clearing Member's Contribution could be impacted by the implementation of this new measure provided by Paragraph 8.3 (a) of Section 8 of the Procedures.

The amendments to Section 8 of the Procedures also contain typographical corrections.

(h) Corrections to the Provisions Related to the Clearing Members' Contribution Requirement

Following discussions on the default fund contribution payments to be made by Clearing Members *that may move* their positions from one entity to another one as part of the Brexit process, LCH SA proposes to clarify in Article 4.4.1.3 of the Rule Book that the Initial Margins to be taken into account for the purpose of the calculation of a Clearing Member's Contribution to the CDS Default Fund would be the available Initial Margins for all Clearing Days if there is less than sixty Clearing Days of history available in respect of a Clearing Member's Account Structure.

The last paragraph of Article 4.4.1.8 of the Rule Book will be also removed. This paragraph states that LCH SA is not entitled to increase the Contribution Requirement of a Clearing Member whose aggregate amount of Initial Margins has not increased.

LCH SA has found that, in light of the netting in the calculation of the Initial Margin(s) provided by LCH SA through its portfolio margining framework, there may be circumstances in which a change in a Clearing Member's positions could lead to an increase of its Group Member Uncovered Risk but not of its Initial Margin(s). In this event, LCH SA has determined that it should have the authority to increase the Contribution Requirement of a Clearing Member. The

amendment to Article 4.4.1.8 will implement this change.

Finally, Paragraph 6.6 (*Additional Contribution Amount*) of Section 6 of the Procedures will be amended to clarify when the Additional Contribution Amount is required to be paid upon a call by LCH SA. As proposed to be amended, Paragraph 6.6 confirms that, if the Clearing Member is notified on or before14:00, the payment is to be made to LCH SA with Euro-denominated Cash Collateral through TARGET2 by 09.00 the next Business Day.[5] If the call is made after 14.00, payment is required to be made at the payment window used for the purpose of the First Intraday Call on the next Business Day.

(i) Miscellaneous Technical and Clarifying Amendments

LCH SA is proposing to make a general reference to reports referred to in Section 5 of the Procedures instead of making a specific reference to the Cleared Transaction Portfolio Report in paragraphs (c) (*Index Fungible*) of Sections 4.8 in Part A and Part B of the Supplement. The purpose of this amendment is to harmonise all of the references made to the reports in the Supplement and to avoid the need for modifying the Supplement if there is a change in the name of the reports provided for in Section 5 of the Procedures.

In addition, paragraph (c) of Sections 9.1 (*Occurrence of Clearing Member Self Referencing Transaction*) of Parts A and B of the Supplement will be aligned by removing the reference to the Clearing Member being the Reference Entity from Part B. This text is unnecessary as Section 9.1 only deals with Self Referencing Transactions for which the Clearing Member is the Reference Entity.

The amendments to the CDS Clearing Supplement also contain typographical corrections and amendments to incorrect used defined terms or incorrect cross-references.

(j) Correction to Certain Defined Terms

The definition of ''CDS Contractual Currency'' in Section 1.1.1 of the CDS Clearing Rule Book will be amended to clarify that in respect of an Index Swaption, the CDS Contractual Currency shall mean the currency of the underlying transaction of an Index Swaption. The defined term ''CDS Contractual Currency'' is used in the context of the price contribution process as set out in Section 5 of the Procedures to determine the relevant applicable timings in respect of a credit default swap or an index swaption.

Since the proposed amended definition of ''CDS Contractual Currency'' refers to the term of ''Underlying Index Transaction'' which is defined in the Supplement, a definition of ''Underlying Index Transaction'' will be added to Section 1.1.1 of the Rule Book to refer to the definition as set out in Part C of the Supplement.

LCH SA proposes to remove the defined terms of ''CDS Intraday Transaction'' and ''Index Swaption Intraday Transaction'' from Section 1.1.1 of the Rule Book as there is no longer the need to make a distinction between these two types of Intraday Transactions. The current distinction was made initially when the CDS Clearing Service was extended to the clearing of Index Swaptions on an intraday basis only. The weekly backloading service is now available to Index Swaptions since last year and this distinction between intraday trades is no longer relevant from a drafting perspective. The defined term ''Intraday Transaction'' will be therefore amended to replace the references to ''CDS Intraday Transaction'' and ''Index Swaption Intraday Transaction'' by ''CDS'' and ''Index Swaption'' respectively. Consequently, the term ''Index Swaption Intraday Transaction'' will be replaced by ''Index Swaption'' in Article 3.1.6.1 and Section 4.1 *(Eligibility Requirements*) of the Procedures, paragraph (c) (iii) (C) will be amended to remove ''Index Swaption Intraday Transaction'' but also ''Weekly Backloading Transaction'' as there is no need to make such reference. Section 4.1 *(Eligibility Requirements*) of the Procedures, paragraph (c)(vii) will be amended to remove the references to ''CDS Intraday Transaction'' and 'Index Swaption Intraday Transaction''.

It is proposed to amend the definitions of ''FCM Client Margin Requirement'', ''FCM House Margin Requirement'' in Section 1.1.1 of the Rule Book to exclude Variation Margin from the Margins calculated by LCH SA as pursuant to Article 3.1.10.9, no Variation Margin is calculated for FCM Clearing Members as only STM Cleared Transaction are registered in their Account Structure(s).

The definition of ''Procedures'' in Section 1.1.1 of the Rule Book will be amended to clarify that such documents are issued by LCH SA and entitled ''CDS Clearing Procedures''.

The reference to the defined term ''Converting Clearing Member'' will be removed from Article 3.1.10.8 of the Rule Book as there is the corresponding definition in Section 1.1.1.

Some of the defined terms in Section 1.1.1 of the Rule Book will be ranged in alphabetical order.

(k) Miscellaneous Amendments

LCH SA proposes to amend Article 1.2.2.1 of the Rule Book by excluding the provisions of Articles 1.2.2.8 and 1.2.2.9 from its scope, since these two Articles deal with the publication of Clearing Notices and are part of the Section 1.2.2, which is contradictory to the last sentence of Article 1.2.2.1.

In addition, Section 4.2.7 of the Rule Book is proposed to be amended to remove any reference to the LCH Settlement Prices, defined as the settlement prices used in respect of Index Swaption Cleared Transactions, since the defined term of Markit LCH Settlement Prices will be amended to also cover these prices, in addition to the settlement prices used in respect of the Index Cleared Transactions and Single Name Cleared Transactions by making a general reference to Cleared Transactions. The defined term of LCH Settlement Price, therefore, will be removed from Section 1.1.1, Article 5.1.1.3 and Article 6.1.1.3 of the Rule Book.

LCH SA also proposes to clarify Article 5.1.1.3, indent (xiii)(a), of the Rule Book by making a reference to the CCM Client and extending the scope of this indent to cover any other purpose, in addition to the payment of the CDS Client Clearing Entitlement to the CCM Client. For example, in the event of an Event of Default occurring in respect of the CCM Client's Clearing Member, LCH SA would like to rely on the CCM Client's information provided by that Clearing Member in order to liaise with the CCM Client in relation to the transfer of the CCM Client's Relevant Client Cleared Transactions and Ported Collateral to a Backup Clearing Member.

In addition, Section 5 of the Procedures is proposed to be amended to remove any reference to bank holidays from Paragraph 5.18.3 (*Price Submission Procedure*) as the list is not exhaustive. When Clearing Members are required to submit prices at earlier times, LCH SA will notify them in advance in accordance with the provisions of this Paragraph. Paragraphs 5.18.3 and 5.18.5 are also proposed to be amended to clarify that the CDS Contractual Currency of the Index Swaptions is in Euro. The reference to ''Clearing Day'' in respect of the notification of execution of cross trades is not correct and is therefore proposed to be replaced by ''Price Contribution

[5] As defined in the Rule Book, ''Business Day'' means ''any day that is not a holiday in the TARGET2 calendar''.

Day'' in indent (d) of Paragraph 5.18.5. The reference to ''Clearing Day'' in the paragraph is relevant for trades denominated in Euro but not in US Dollars since the definition of Clearing Day does not take into account bank holidays in the U.S., contrary to the definition of ''Price Contribution Day''. In Section 5 of the Procedures, LCH SA further proposes to specify that any reference to the ''Operations department'' is a reference to the ''CDSClear Operations Department''.

Finally, LCH SA proposes to remove all the Appendices of Section 5 of the Procedures, which are template forms to be used in the context of the Pre-Default Portability process as provided for in Paragraph 5.6 of Section 5 of the Procedures. The forms referred to in the CDS Clearing Rules are in general not appended to the rules and LCH SA would like to gain flexibility in amending them from time to time, for example to change contact details or make other minor changes to these forms without the need to amend Section 5 of the Procedures. The references to such Appendices will be removed from Paragraph 5.6 and the template forms will be available upon request pursuant to amended Paragraph 5.6.[5]

(b) Statutory Basis

LCH SA has determined that Proposed Rule Change is consistent with the requirements of Section 17A of the Securities Exchange Act (''Act'')[6] and regulations thereunder applicable to it. Section 17A(b)(3)(F) of the Act requires, *inter alia,* that the rules of a clearing agency ''promote the prompt and accurate clearance and settlement of securities transactions and . . . assure the safeguarding of securities and funds that are in its custody or control or for which it is responsible . . . and, in general, to protect investors and the public interest.''[7]

LCH SA has proposed amendments to introduce the clearing of single name CDS transactions referencing a monoline insurer constituent of certain indices such as the CDX.NA IG and CDS.NA.HY. In doing so, LCH SA has assured that its existing risk management methodology, and in particular its Wrong Way Risk margin framework, is appropriate to manage the risk arising from the clearing of a single name CDS referencing a monoline insurer, including collecting and maintaining financial resources intended to cover the risks to which LCH SA is exposed in connection with offering such clearing services. As such LCH SA will be able to minimize the risk that the losses associated with the default of a participant (or participants) in the clearing service will extend to other participants in the service. By introducing the clearing of single name CDS transactions referencing a monoline insurer constituent of the CDX.NA IG and CDS.NA.HY indices, LCH SA is promoting the prompt and accurate clearance and settlement of derivatives transactions. As such, the clearing of single name CDS transactions referencing a monoline insurers is consistent with Section 17A(b) (3)(F) of the Act.

Regulation 17Ad–22(e)(3)(i) requires a ''covered clearing agency'', *i.e.,* a clearing agency that is involved in activities with a more complex risk profile, such as providing services for security-based swaps, to maintain and enforce written policies and procedures reasonably designed to maintain a sound risk management framework for comprehensively managing the risks that arise in or are borne by the covered clearing agency, including risk management policies, procedures, and systems designed to identify, measure, monitor, and manage the range of risks that arise in or are borne by the covered clearing agency.[8]

As noted above, in introducing the clearing of single name CDS transactions referencing a monoline insurer, LCH SA made such amendments as are necessary to assure that its risk management methodology is appropriate to measure, monitor and manage the risk arising from the clearing of such single name CDS. As such, the clearing of single name CDS transactions referencing a monoline insurers is consistent with Regulation 17Ad–22(e)(3)(i).

Regulation 17dA–22(e)(4)(ii) requires a covered clearing agency to maintain and enforce written policies and procedures reasonably designed to effectively ''measure, monitor, and manage its credit exposures from its payment, clearing and settlement processes'' to assure that it maintains additional financial resources to enable it to cover a wide range of stress scenarios that include the default to two participant family clearing members that would potentially cause the largest aggregate liquidity exposure for the CCP in extreme but plausible market conditions.[9]

As discussed above, LCH SA is proposing to introduce two new margins to address additional financial risks to which Clearing Member may be exposed: (i) Legal Entity Identity Margin; and (ii) Stress Test Loss Over Additional Margin/Net Capital Ratio Margin. These additional margins are intended to assure that LCH SA has sufficient financial resources to manage the default of a Clearing Member with multiple margin accounts or which has accumulated positions at LCH SA that provide the Clearing Member high leverage versus its net capital amount.

Similarly, the proposal to apply stress test scenarios to non-cash collateral securities posted to cover margin requirements and to include the potential stressed loss over the collateral haircut is intended to assure that LCH SA has enough financial resources to cover its liquidity needs in extreme but plausible market conditions.

The above proposals, therefore, are designed to enhance LCH SA's ability to measure, monitor, and manage its credit exposures from its payment, clearing and settlement processes to assure that it maintains additional financial resources to enable it to cover a wide range of stress scenarios the liquidity risk that may arise in connection with its activities as a covered clearing agency. As such the amendments creating two new margins and applying stress test scenarios to non-cash collateral are consistent with the requirements of Section 17A(b)(3)(F) of the Act and Regulation 17dA–22(e)(4)(ii).

Regulation 17Ad–22(e)(6)(iv)[10] requires a covered clearing agency to establish a risk-based margin system that uses ''reliable sources of timely price data and uses procedures and sound valuation models for addressing circumstances in which pricing data are not readily available or reliable''. Further, Section 17A(b)(3)(G) of the Act provides that the participants of a clearing agency shall be appropriately disciplined for violation of any provision of the rules of the clearing agency by fine or any other fitting sanction. The addition of a new potential disciplinary measure available to LCH SA in the event of repetitive failures to submit prices (as part of the price submission procedure) by a Clearing Member is intended to assure the accuracy of the market data on which the CCP risk model relies and to appropriately discipline a Clearing

[5] The amendments to the Rule Book (including Appendix 1) and the Procedures also contain typographical corrections and amendments to incorrect defined terms or incorrect cross-references.

[6] 15 U.S.C. 78q–1

[7] 15 U.S.C. 78q–1(b)(3)(F).

[8] 17 CFR 240.17Ad–22(e)(3)(i).

[9] 17 CFR 240.17Ad–22(e)(4)(ii).

[10] 17 CFR 240.17Ad–22(e)(6)(iv).

Member that repeatedly fails to provide timely and accurate pricing data. As such, the proposed amendments to provide for the imposition of fines on Members that do not submit prices as required are consistent with the provisions of Regulation 17Ad–22(e) and Section 17A(b)(3)(G) of the Securities Exchange Act.

Regulation 17Ad–22(e)(16) [11] requires a covered clearing agency to establish, maintain and enforce written policies and procedures designed to ''[s]afeguard the covered clearing agency's own and its participants' assets, minimize the risk of loss and delay in access to these assets, and invest such assets in instruments with minimal credit, market, and liquidity risks.'' As discussed above, LCH SA is proposing to amend its Rule Book to enhance its CDS Default Management Process by adding an additional resource in the event of the default of a Clearing Member. Specifically, LCH SA would be entitled to use any remaining house collateral transferred in respect of other LCH SA clearing services to reduce or cover losses linked to the liquidated Client Cleared Transactions of the Defaulting Clearing Member. By enhancing the assets available to LCH SA in the event of a CDS Clearing Member default, LCH SA is safeguarding its own and its participants' assets. The proposal, therefore, is consistent with Regulation 17Ad-22(e)(16).

Regulation 17Ad–22(e)(13) provides that a clearing agency must establish, maintain and enforce written policies and procedures assure that the covered clearing agency ''has the authority and operational capacity to take timely action to contain losses and liquidity demands and continue to meet its obligations''.[12] The proposed amendments to the early termination-related provisions set out in Clause 8 of Appendix 1 of the Rule Book are intended to clarify the applicable process by which LCH SA, in the event of a Clearing Member default, may liquidate any Non-Defaulting Clearing Member's Collateral other than Euro denominated Cash Collateral when necessary to make required payments. The proposed amendments, therefore, are intended to assure that LCH SA has the authority and operational capacity to take timely action to contain losses and liquidity demands and continue to meet its obligations. As such, the proposed amendments are consistent with the provisions of Regulation 17Ad–22(e)(13).

Regulation 17Ad–22(e)(4) [13] requires a covered clearing agency to establish, implement, maintain and enforce written policies and procedures reasonably designed to effectively identify, measure, monitor, and manage its credit exposures to participants and those arising from its payment, clearing, and settlement processes, including by including prefunded financial resources. LCH SA is proposing (i) to clarify that the Initial Margins to be taken into account for the purpose of the calculation of a Clearing Member's Contribution would be the available Initial Margins if there is less than sixty Clearing Days of history available and (ii) to remove the provisions preventing LCH SA from increasing the Contribution Requirement of a Clearing Member whose aggregate amount of Initial Margins has not increased.

For all these reasons, LCH SA believes that the Proposed Rule Change is consistent with the requirements of Section 17A of the Act and the regulations thereunder, including the standards under Rule 17Ad–22.

B. Clearing Agency's Statement on Burden on Competition

Section 17A(b)(3)(I) of the Act requires that the rules of a clearing agency not impose any burden on competition not necessary or appropriate in furtherance of the purposes of the Act.[14] LCH SA does not believe the Proposed Rule Change would have any impact, or impose any burden, on competition. The Proposed Rule Change does not address any competitive issue or have any impact on the competition among central counterparties. LCH SA operates an open access model, and the Proposed Rule Change will have no effect on this model.

C. Clearing Agency's Statement on Comments on the Proposed Rule Change Received From Members, Participants or Others

Written comments relating to the proposed rule change have not been solicited or received. LCH SA will notify the Commission of any written comments received by LCH SA.

III. Date of Effectiveness of the Proposed Rule Change and Timing for Commission Action

Within 45 days of the date of publication of this notice in the **Federal Register** or within such longer period up to 90 days (i) as the Commission may designate if it finds such longer period to be appropriate and publishes its reasons for so finding or (ii) as to which the self-regulatory organization consents, the Commission will:

(A) By order approve or disapprove such proposed rule change, or

(B) institute proceedings to determine whether the proposed rule change should be disapproved.

IV. Solicitation of Comments

Interested persons are invited to submit written data, views, and arguments concerning the foregoing, including whether the proposed rule change is consistent with the Act. Comments may be submitted by any of the following methods:

Electronic Comments

- Use the Commission's internet comment form (*http://www.sec.gov/rules/sro.shtml*); or
- Send an email to *rule-comments@sec.gov*. Please include File Number SR–LCH SA–2020–004 on the subject line.

Paper Comments

- Send paper comments in triplicate to Secretary, Securities and Exchange Commission, 100 F Street NE, Washington, DC 20549–1090.

All submissions should refer to File Number SR–LCH SA–2020–004. This file number should be included on the subject line if email is used. To help the Commission process and review your comments more efficiently, please use only one method. The Commission will post all comments on the Commission's internet website (*http://www.sec.gov/rules/sro.shtml*). Copies of the submission, all subsequent amendments, all written statements with respect to the proposed rule change that are filed with the Commission, and all written communications relating to the proposed rule change between the Commission and any person, other than those that may be withheld from the public in accordance with the provisions of 5 U.S.C. 552, will be available for website viewing and printing in the Commission's Public Reference Room, 100 F Street NE, Washington, DC 20549 on official business days between the hours of 10:00 a.m. and 3:00 p.m. Copies of the filing also will be available for inspection and copying at the principal office of LCH SA and on LCH SA's website at: *https://www.lch.com/resources/rules-and-regulations/proposed-rule-changes-0*.

All comments received will be posted without change. Persons submitting

[11] 17 CFR 240.17Ad–22(e)(16).

[12] 17 CFR 240.17Ad–22(e)(13).

[13] 15 U.S.C. 78q–1

[14] 15 U.S.C. 78q–1(b)(3)(I).

comments are cautioned that we do not redact or edit personal identifying information from comment submissions. You should submit only information that you wish to make available publicly. All submissions should refer to File Number SR–LCH SA–2020–004 and should be submitted on or before October 1, 2020.

For the Commission, by the Division of Trading and Markets, pursuant to delegated authority.[15]

October 1, 2020.

J. Matthew DeLesDernier,

Assistant Secretary.

[FR Doc. 2020–19942 Filed 9–9–20; 8:45 am]

BILLING CODE 8011–01–P

[15] 17 CFR 200.30–3(a)(12).

SECURITIES AND EXCHANGE COMMISSION

[Release No. 34–89763; File No. SR–MEMX–2020–05]

Self-Regulatory Organizations; MEMX LLC; Notice of Filing and Immediate Effectiveness of a Proposed Rule Change To Amend the Corporate Documents of the Exchange's Parent Company

September 3, 2020.

Pursuant to Section 19(b)(1) of the Securities Exchange Act of 1934 (the ''Act''),[1] and Rule 19b–4 thereunder,[2] notice is hereby given that on August 28, 2020, MEMX LLC (''MEMX'' or the ''Exchange'') filed with the Securities and Exchange Commission (the ''Commission'') the proposed rule change as described in Items I, and II below, which Items have been prepared by the Exchange. The Exchange filed the proposal as a ''non-controversial'' proposed rule change pursuant to Section 19(b)(3)(A)(iii) of the Act[3] and Rule 19b–4(f)(6) thereunder.[4] The Commission is publishing this notice to solicit comments on the proposed rule change from interested persons.

I. Self-Regulatory Organization's Statement of the Terms of Substance of the Proposed Rule Change

The Exchange is filing with the Commission a proposed rule change to proposed rule change to amend the Fourth Amended and Restated Limited Liability Company Agreement (the ''Holdco LLC Agreement'') of MEMX Holdings LLC (''Holdco''), as further discussed below. Holdco is the parent company of the Exchange and directly or indirectly owns all of the limited liability company membership interests in the Exchange. The text of the proposed rule change is provided in Exhibit 5.

[1] 15 U.S.C. 78s(b)(1).

[2] 17 CFR 240.19b–4.

[3] 15 U.S.C. 78s(b)(3)(A).

[4] 17 CFR 240.19b–4.

II. Self-Regulatory Organization's Statement of the Purpose of, and Statutory Basis for, the Proposed Rule Change

In its filing with the Commission, the Exchange included statements concerning the purpose of and basis for the proposed rule change and discussed any comments it received on the proposed rule change. The text of these statements may be examined at the places specified in Item IV below. The Exchange has prepared summaries, set forth in sections A, B, and C below, of the most significant aspects of such statements.

A. Self-Regulatory Organization's Statement of the Purpose of, and Statutory Basis for, the Proposed Rule Change

1. Purpose

The Exchange proposes to amend the Holdco LLC Agreement to: (i) Add defined terms reflecting the admission of each of BLK SMI, LLC (''BlackRock'') and Wells Fargo Central Pacific Holdings, Inc. (''Wells Fargo'') as a Class A Member[5] of Holdco (a ''Holdco Class A Member''), amend the definitions of ''Excluded Class A Member''[6] and ''Bank Class A Member''[7] to include reference to Wells Fargo and make other related conforming changes throughout the Holdco LLC Agreement; (ii) provide that the board of directors of Holdco (the ''Holdco Board'') shall establish and designate a market structure committee of the Holdco Board (the ''Holdco Market Structure Committee'') and that a representative of BlackRock shall be a member of such Committee and the chairperson of such Committee if BlackRock so requests; (iii) update the compositional requirements of the Industry Advisory Board[8] of Holdco (the ''Holdco Industry Advisory Board'') to reflect that BlackRock has been admitted as a Holdco Class A Member, and as such would be entitled to appoint a representative to the Holdco Industry Advisory Board, and to make other clarifying changes to such requirements and related provisions; (iv) specify the compositional requirements of any Holdco Subsidiary Industry Advisory Board (as defined below); and (v) clarify that Members of Holdco which do not operate (or have an Affiliate[9] that operates) a U.S.-registered broker-dealer that executes transactions directly on U.S. exchanges are not required to cause any such Member of Holdco (or its Affiliates, as applicable) to use good faith efforts to connect to the Exchange, and specifically provide that such requirement also does not apply to BlackRock and its Affiliates.

Add ''BlackRock'' and ''Wells Fargo'' as Defined Terms

On April 7, 2020, Wells Fargo purchased Class A Units of Holdco and was admitted as a Holdco Class A Member, as previously approved by the Holdco Board. On May 11, 2020, BlackRock purchased Class A Units of Holdco and was admitted as a Holdco Class A Member, as previously approved by the Holdco Board.

The Exchange now proposes to add ''BlackRock'' and ''Wells Fargo'' as defined terms in the Holdco LLC Agreement to reflect that each of BlackRock and Wells Fargo has been admitted as a Holdco Class A Member. The proposed definitions of BlackRock and Wells Fargo are consistent with the definitions of other Holdco Class A Members with similar rights and preferences as BlackRock and Wells Fargo, respectively. Related to the addition of Wells Fargo as a defined term in the Holdco LLC Agreement, the Exchange also proposes to amend the definition of the term ''Excluded Class A Member'' to include reference to Wells Fargo (in addition to UBS Americas Inc.), as Wells Fargo was granted the same rights under the Holdco LLC Agreement as UBS Americas Inc. by the Holdco Board, and to make related conforming changes throughout the Holdco LLC Agreement

[5] The term ''Class A Member'' refers to a Member of Holdco holding Class A–1 Units or Class A–2 Units of Holdco. *See* Section 1.1 of the Holdco LLC Agreement. The term ''Member'' refers to a person admitted as a member of Holdco.

[6] Presently, the term ''Excluded Class A Member'' refers to UBS Americas Inc. *See* Section 1.1 of the Holdco LLC Agreement.

[7] The term ''Bank Class A Member'' refers to each of Banc of America Strategic Investments Corporation, Strategic Investments I, Inc., UBS Americas Inc., JPMC Strategic Investments I Corporation, Goldman Sachs PSI Global Holdings, LLC, and any other Member of Holdco that is specifically designated as a Bank Class A Member (which would include Wells Fargo pursuant to the proposed amendments described herein), in each case, together with each of their respective Affiliates. *See* Section 1.1 of the Holdco LLC Agreement.

[8] The term ''Industry Advisory Board'' refers to an advisory board of Holdco with industry representation. *See* Section 8.19(a) of the Holdco LLC Agreement.

[9] The term ''Affiliate'' refers to, with respect to any person, any other person who, directly or indirectly (including through one or more intermediaries), controls, is controlled by, or is under common control with, such person. *See* Section 1.1 of the Holdco LLC Agreement.

to reflect that there would be two Excluded Class A Members instead of one as presently drafted (such as changing references to ''the Excluded Class A Member'' to ''each Excluded Class A Member''). The Exchange also proposes to amend the definition of ''Bank Class A Member'' to include reference to Wells Fargo as a designated Bank Class A Member. Presently, the designation of Wells Fargo as a Bank Class A Member under the Holdco LLC Agreement does not impact the governance of Holdco or any Holdco Subsidiary, or have any other effect, but is consistent with Holdco's approach of including an Excluded Class A Member that is a bank within this definition. The designation as a Bank Class A Member would only have an effect to the extent Wells Fargo becomes a Nominating Class A Member [10] with the right to appoint a director of Holdco at some point in the future. The Exchange believes these are non-substantive changes to update the corporate documents of Holdco to reflect the recent admission of two new Holdco Class A Members and to harmonize other defined terms used in the Holdco LLC Agreement.

Holdco Market Structure Committee

Section 8.9 of the Holdco LLC Agreement presently provides that the Holdco Board may designate one or more committees, which shall be comprised of one or more directors and alternate directors of the Holdco Board, and that such committees shall have the authority to make recommendations to the Holdco Board in an advisory role only and shall not have the authority to act for or on behalf of, or to bind, Holdco or any of its subsidiaries (including the Exchange) (each, a ''Holdco Subsidiary'' and, collectively, the ''Holdco Subsidiaries'').

Pursuant to Section 8.9, on May 5, 2020, the Holdco Board established and designated the Holdco Market Structure Committee as a committee of the Holdco Board and approved a charter directing the Holdco Market Structure Committee to consider and present to the Holdco Board non-binding recommendations regarding matters relating to market structure applicable to Holdco and the Holdco Subsidiaries, which matters may include, but are not limited to, regulatory proposals, infrastructure and resiliency initiatives, transparency initiatives, market and commercial trends and market data issues, as the Holdco Board considers such market structure matters in the course of its duties. The charter of the Holdco Market Structure Committee and the resolutions of the Holdco Board related to the designation of the Holdco Market Structure Committee provide that, so long as BlackRock remains a Nominating Class A Member of Holdco (a ''Holdco Nominating Class A Member''), BlackRock shall have the right, but not the obligation, to designate one of its representatives to serve on the Holdco Market Structure Committee at all times and that, if BlackRock so requests, a representative of BlackRock shall be the chairperson of the Holdco Market Structure Committee.

The Exchange now proposes to amend Section 8.9 to, without deleting or modifying any existing text, add a provision requiring the Holdco Board to establish the Holdco Market Structure Committee and providing for the foregoing rights of BlackRock related to its representation on the Holdco Market Structure Committee, as previously approved by the Holdco Board. As amended by the proposed change, Section 8.9 would continue to permit the Holdco Board to designate representation on the Holdco Market Structure Committee from among the Holdco Nominating Class A Members by appointing directors and alternate directors on the Holdco Board to such Committee and would additionally provide for the specific rights of BlackRock to appoint a representative to serve on such Committee and for such representative to serve as the chairperson of such Committee, in each case if BlackRock so requests. While these specific rights apply only to BlackRock, as noted above, the other Holdco Nominating Class A Members will have representation on the Holdco Market Structure Committee as designated by the Holdco Board, which has generally agreed that each Holdco Nominating Class A Member shall have the right to appoint a representative to serve on such Committee if such Holdco Nominating Class A Member so requests. Thus, each Holdco Nominating Class A Members is presently entitled to have representation on the Market Structure Committee and, as noted above, the Market Structure Committee only considers matters in a non-binding capacity and it is the Holdco Board, with representation from all Holdco Nominating Class A Members as provided under the Holdco LLC Agreement, that must ultimately take action with respect to such matters. Moreover, each Member of Holdco and the Holdco Board has been advised of BlackRock's specific rights with respect to representation on the Holdco Market Structure Committee, and such rights were approved by the Holdco Board on May 5, 2020, without any objection raised by any Member of Holdco or the Holdco Board. Accordingly, the proposed change would update the corporate documents of Holdco to implement a requirement which was already permitted under the Holdco LLC Agreement and which the Holdco Board has already agreed to and satisfied by action taken on May 5, 2020. The Exchange and the Holdco Board each believes that amending the Holdco LLC Agreement to include a requirement that the Holdco Market Structure Committee be established would ensure that the Holdco Market Structure Committee remains in place and further believes that having the Holdco Market Structure Committee in place (specifically with BlackRock's representation, including as chairperson, if BlackRock so desires) would meaningfully aid the Holdco Board in considering market structure-related matters and would ultimately help Holdco and the Exchange to promote a fair, transparent and efficient experience for all investors.

Holdco Industry Advisory Board

Section 8.19 of the Holdco LLC Agreement, which contains provisions relating to the creation and functioning of the Holdco Industry Advisory Board, provides that, if established, the Holdco Industry Advisory Board will provide advice and guidance to the Holdco Board and the management of Holdco and the Exchange relating to, among other things, technical and operational matters relating to the Exchange, but it will not be a committee of the Holdco Board. Section 8.19(a) contains provisions that specify the compositional requirements of the Holdco Industry Advisory Board and presently provides that ''Promptly after the Effective Date,'' [11] the Holdco Board may, upon a determination to do so by Supermajority Board Vote,[12] establish the Holdco Industry Advisory Board.

[10] The term ''Nominating Class A Member'' refers to a Class A Member of Holdco which has the right to nominate a director to the Holdco Board. *See* Section 8.3(b) of the Holdco LLC Agreement.

[11] The term ''Effective Date'' refers to the effective date of the Holdco LLC Agreement, which is February 19, 2020.

[12] The term ''Supermajority Board Vote'' means the affirmative vote of at least seventy-seven percent (77%) of the votes of all directors of Holdco then entitled to vote on the matter under consideration and who have not recused themselves, whether or not present at the applicable meeting of the Holdco Board; provided that if such affirmative vote threshold results in the necessity of the affirmative vote of all such directors of Holdco with respect to such matter, an affirmative vote of all but one of such directors of Holdco shall be required instead with respect to such matter. *See* Section 1.1 of the Holdco LLC Agreement.

The Exchange now proposes to amend Section 8.19(a) of the Holdco LLC Agreement to (i) update the compositional requirements of the Holdco Industry Advisory Board to reflect that BlackRock has been admitted as a Holdco Class A Member, and as such would be entitled to appoint a representative to the Holdco Industry Advisory Board if it so desires, and to make other clarifying changes relating to certain terms currently used in that section, and (ii) delete the phrase ''Promptly after the Effective Date,'' as such phrase is inapplicable and confusing in the context given the elective nature of the Holdco Board's ability to establish the Holdco Industry Advisory Board.

Section 8.19(a) presently provides, among other things, that the Holdco Industry Advisory Board shall be comprised of: (i) One representative of (a) each Market Maker Class A Member [13] which is a Holdco Nominating Class A Member, (b) each Retail Broker Class A Member [14] which is a Holdco Nominating Class A Member, (c) each Bank Class A Member which is a Holdco Nominating Class A Member, and (d) the Excluded Class A Member so long as it is entitled to appoint an observer to the Holdco Board (a ''Holdco Board Observer''), and (ii) such members of the Exchange as determined by the Holdco Board. The proposed amendment would eliminate the references in this section to certain specific categories of Holdco Class A Members, namely, Market Maker Class A Member, Retail Broker Class A Member, and Bank Class A Member and would replace such references with a single reference to Holdco Nominating Class A Members, as all of the Holdco Class A Members that make up such categories, together with BlackRock, now comprise all of the Holdco Nominating Class A Members.

The effect of the proposed change is to eliminate unnecessary references to specific categories of Holdco Class A Members and replace such references with a single reference to Holdco Nominating Class A Members, which now includes BlackRock in addition to the Holdco Class A Members that comprise the categories of Holdco Class A Members presently referenced, and to provide that for so long as each Holdco Nominating Class A Member remains a Holdco Nominating Class A Member or is entitled to appoint a Holdco Board Observer pursuant to the terms of the Holdco LLC Agreement, each such Holdco Nominating Class A Member is entitled to appoint a representative to the Holdco Industry Advisory Board if it so desires. The proposed change would also update the reference to ''the Excluded Class A Member'' in this section to ''each Excluded Class A Member'' to reflect Wells Fargo's inclusion in that defined term, but it would not in any way affect any Excluded Class A Member's right to appoint a representative to the Holdco Industry Advisory Board, which are in addition to the rights of each Holdco Nominating Class A Member to appoint a representative to the Holdco Industry Advisory Board. In short, the proposed amendment would add BlackRock to the group of Holdco Class A Members that, together with the Excluded Class A Members, each have the right to appoint a representative to the Holdco Industry Advisory Board and would simplify the language used to reflect this.

The Exchange also proposes to amend Section 8.19(a) to delete the phrase ''Promptly after the Effective Date,'' with respect to the Holdco Board's ability to establish the Holdco Industry Advisory Board. The ability granted to the Holdco Board by Section 8.19(a) to establish the Holdco Industry Advisory Board is elective in nature, as the existing language provides that Holdco Board *may* establish the Holdco Industry Advisory Board, and as such was not intended by the Members of Holdco to be required to be exercised at any specific time (or at all). Instead, the language was intended to, and does in effect, provide that this ability may only be exercised if and when the Holdco Board determines to do so by Supermajority Board Vote. The phrase ''Promptly after the Effective Date,'' is therefore inapplicable and may cause confusion in this context as it could be read to imply an unintended and undefined durational requirement with respect to the Holdco Board's ability and discretion to establish the Holdco Industry Advisory Board. Accordingly, deleting this phrase would clarify the provision to more accurately reflect the intent of the Members of Holdco for the Holdco Board to have the ability to establish the Holdco Industry Advisory Board at such time as determined by Supermajority Board Vote (or not at all) rather than within any specific amount of time following the Effective Date. The Holdco Industry Advisory Board has not been established as of the date of this filing.

Holdco Subsidiary Industry Advisory Boards

The Exchange proposes to amend Section 8.19 of the Holdco LLC Agreement to add a new clause (c) to specify the compositional requirements of any Holdco Subsidiary Industry Advisory Board. Specifically, the proposed new Section 8.19(c) provides that, with respect to any committee or advisory board of any Holdco Subsidiary which has functions similar to the contemplated functions of the Holdco Industry Advisory Board (any such committee or advisory board, a ''Holdco Subsidiary Industry Advisory Board''), (a) each Holdco Class A Member which is a Holdco Nominating Class A Member, for so long as it remains a Holdco Nominating Class A Member or is entitled to appoint a Holdco Board Observer pursuant to the terms of the Holdco LLC Agreement, and (b) each Excluded Class A Member, for so long as it is entitled to appoint a Holdco Board Observer pursuant to the terms of the Holdco LLC Agreement, would have the right, but not the obligation, to appoint a representative to such Holdco Subsidiary Industry Advisory Board.

The Exchange believes that the proposed compositional requirements relating to any Holdco Subsidiary Industry Advisory Board are consistent with the proposed updated compositional requirements relating to the Holdco Industry Advisory Board, and as such would provide for a uniform approach by Holdco and the Holdco Subsidiaries to considering matters within the scope of such industry advisory boards. No Holdco Subsidiary Industry Advisory Board has been established as of the date of this filing.

Connection to the Exchange by Certain Members

Section 11.8 of the Holdco LLC Agreement presently provides that each Member of Holdco shall use (or shall ensure that any of its Affiliates that it determines are to be members of the Exchange use) good faith efforts to take

[13] The term ''Market Maker Class A Member'' refers to each of Citadel Securities Principal Investments LLC, Virtu Getco Investments, LLC, Jane Street Group, LLC, and any other Member of Holdco that is specifically designated as a Market Maker Class A Member (of which there are none as of the date of this filing), in each case, together with each of their respective Affiliates. *See* Section 1.1 of the Holdco LLC Agreement. On May 12, 2020, Virtu Getco Investments, LLC changed its name to Virtu Investments LLC.

[14] The term ''Retail Broker Class A Member'' refers to each of E*TRADE Financial Corporation, Devonshire Investors (Delaware) LLC, The Charles Schwab Corporation, Datek Online Management Corp., and any other Member of Holdco that is specifically designated as a Retail Broker Class A Member (of which there are none as of the date of this filing) and which, or an Affiliate of which, is a broker-dealer registered with the Financial Industry Regulatory Authority, Inc. which provides services to retail customers, in each case, together with each of their respective Affiliates. *See* Section 1.1 of the Holdco LLC Agreement.

such actions as are necessary to enable such Member (or its Affiliates, as applicable) to connect to the Exchange prior to the operational date of the Exchange in a manner that would permit such Member (or its Affiliates, as applicable) to use the Exchange in a fair, equitable and non-discriminatory manner.

The Exchange now proposes to amend Section 11.8 to clarify that Members of Holdco which do not operate (or have an Affiliate that operates) a U.S.-registered broker-dealer that executes transactions directly on U.S. exchanges are not required to use (or cause its Affiliates, as applicable, to use) good faith efforts to connect to the Exchange, as connection to the Exchange by such persons may not be permissible under Exchange Rule 2.3, which requires, among other things, that each member of the Exchange be a registered broker or dealer. The Exchange believes that the proposed amendment clarifies the existing language in Section 11.8, which could be read to require Members of Holdco (or their Affiliates, as applicable) that are not registered as a broker or dealer to use good faith efforts to connect to the Exchange in a manner inconsistent with Exchange Rule 2.3, to more accurately reflect the intent of the Members of Holdco to require only those Members of Holdco (or their Affiliates, as applicable) which operate a U.S.-registered broker-dealer that executes transactions directly on U.S. exchanges to use good faith efforts to connect to the Exchange in a manner consistent with the Exchange's rules and the Act.

BlackRock is an asset manager, and its business model does not involve acting as a broker-dealer on behalf of third parties on U.S. exchanges. For clarity's sake, BlackRock does have Affiliates that are U.S.-registered broker-dealers but these Affiliates do not execute transactions directly on U.S. exchanges, so out of an abundance of caution, the Exchange also proposes to further amend Section 11.8 to specifically provide that the requirement to connect to the Exchange shall not apply to BlackRock and its Affiliates. If BlackRock were to alter its business model so that it or any broker-dealer Affiliate did execute transactions directly on a U.S. exchange and, specifically, were to connect to the Exchange, the Exchange would require such connection to be conducted in a manner that would permit such person to use the Exchange in a fair, equitable and non-discriminatory manner consistent with the existing requirements of Section 11.8.

2. Statutory Basis

The Exchange believes the proposed rule change is consistent with Section 6(b) of the Act,[15] in general, and furthers the objectives of Section 6(b)(1),[16] in particular, in that it enables the Exchange to be so organized as to have the capacity to be able to carry out the purposes of the Act and to comply, and to enforce compliance by its members, with the provisions of the Act, the rules and regulations thereunder, and the rules of the Exchange. The Exchange also believes that the proposed rule change is consistent with Section 6(b)(5) of the Act,[17] which requires the rules of an exchange to be designed to promote just and equitable principles of trade, to foster cooperation and coordination with persons engaged in facilitating transactions in securities, to remove impediments to and perfect the mechanism of a free and open market and a national market system, and, in general, to protect investors and the public interest.

The Exchange believes the proposed amendments to the Holdco LLC Agreement to add ''BlackRock'' and ''Wells Fargo'' as defined terms and make related conforming changes to certain definitions and other provisions, to update and clarify the compositional requirements of, and remove inapplicable and confusing language relating to, the Holdco Industry Advisory Board, and to add a provision requiring the Holdco Board to establish the Holdco Market Structure Committee and providing for certain rights of BlackRock relating to its representation on such Committee would update and clarify the relevant provisions of the Holdco LLC Agreement in a manner consistent with actions already taken by the Holdco Board as currently permitted by the Holdco LLC Agreement, and as such would enable the Exchange to be so organized as to have the capacity to carry out the purposes of the Act, remove impediments to and perfect the mechanism of a free and open market, and protect investors and the public interest.

The Exchange believes the proposed amendment to the Holdco LLC Agreement to specify compositional requirements for any Holdco Subsidiary Industry Advisory Board consistent with the proposed updated compositional requirements relating to the Holdco Industry Advisory Board would establish a uniform approach by Holdco and the Holdco Subsidiaries to the consideration of matters within the scope of such industry advisory boards, which include technical and operational matters relating to the Exchange, and as such would promote the maintenance of a fair and orderly market and the protection of investors and the public interest.

The Exchange believes the proposed amendment to the Holdco LLC Agreement to not require Members of Holdco (or their Affiliates, as applicable) which do not operate a U.S.-registered broker-dealer that executes transactions directly on U.S. exchanges, including BlackRock and its Affiliates, to connect to the Exchange would add clarity to the Holdco LLC Agreement in a manner that would enable the Exchange to comply, and enforce compliance by its members, with the provisions of the Act and the rules of the Exchange, which require each member of the Exchange to be a registered broker or dealer (or person associated with a registered broker or dealer), and as a result would foster cooperation and coordination with persons engaged in facilitating transactions in securities, remove impediments to and perfect the mechanism of a free and open market and a national market system, and enable the Exchange to be so organized as to have the capacity to carry out the purposes of the Act. The Exchange also believes that specifically stating that BlackRock and its Affiliates are not required to connect to the Exchange is consistent with the Act and the rules of the Exchange for the reasons set forth above and to avoid potential confusion because BlackRock does have Affiliates that are U.S.-registered broker-dealers but that do not execute transactions directly on U.S. exchanges.

B. Self-Regulatory Organization's Statement on Burden on Competition

Because the proposed rule change relates to: (i) The compositional requirements of certain non-binding advisory committees and boards of the Exchange and its parent company and (ii) clarifying and other non-substantive changes to the corporate documents of the Exchange's parent company, and not the operations of the Exchange, the Exchange does not believe that the proposed rule change will impose any burden on competition not necessary or appropriate in furtherance of the purposes of the Act.

[15] 15 U.S.C. 78f(b).

[16] 15 U.S.C. 78f(b)(1).

[17] 15 U.S.C. 78f(b)(5).

C. Self-Regulatory Organization's Statement on Comments on the Proposed Rule Change Received From Members, Participants, or Others

The Exchange neither solicited nor received comments on the proposed rule change.

III. Date of Effectiveness of the Proposed Rule Change and Timing for Commission Action

Because the foregoing proposed rule change does not: (i) Significantly affect the protection of investors or the public interest; (ii) impose any significant burden on competition; and (iii) become operative for 30 days from the date on which it was filed, or such shorter time as the Commission may designate, it has become effective pursuant to Section 19(b)(3)(A) of the Act [18] and Rule 19b–4(f)(6) thereunder.[19]

A proposed rule change filed pursuant to Rule 19b–4(f)(6) under the Act [20] normally does not become operative for 30 days after the date of its filing. However, Rule 19b–4(f)(6)(iii) [21] permits the Commission to designate a shorter time if such action is consistent with the protection of investors and the public interest. The Exchange has asked the Commission to waive the 30-day operative delay. The Commission believes that waiver of the 30-day operative delay is consistent with the protection of investors and the public interest because the proposed rule change does not raise any new issues with respect to the Exchange and is concerned solely with updating the corporate documents of the Exchange's parent company to reflect and accommodate the addition of new investors. Therefore, the Commission hereby waives the operative delay and designates the proposal as operative upon filing.[22]

At any time within 60 days of the filing of the proposed rule change, the Commission summarily may temporarily suspend such rule change if it appears to the Commission that such action is necessary or appropriate in the public interest, for the protection of investors, or otherwise in furtherance of the purposes of the Act. If the Commission takes such action, the Commission shall institute proceedings under Section 19(b)(2)(B) [23] of the Act to determine whether the proposed rule change should be approved or disapproved.

IV. Solicitation of Comments

Interested persons are invited to submit written data, views, and arguments concerning the foregoing, including whether the proposed rule change is consistent with the Act. Comments may be submitted by any of the following methods:

Electronic Comments

- Use the Commission's internet comment form (*http://www.sec.gov/rules/sro.shtml*); or
- Send an email to *rule-comments@sec.gov.* Please include File Number SR–MEMX–2020–05 on the subject line.

Paper Comments

- Send paper comments in triplicate to Secretary, Securities and Exchange Commission, 100 F Street NE, Washington, DC 20549–1090.

All submissions should refer to File Number SR–MEMX–2020–05. This file number should be included on the subject line if email is used. To help the Commission process and review your comments more efficiently, please use only one method. The Commission will post all comments on the Commission's internet website (*http://www.sec.gov/rules/sro.shtml*). Copies of the submission, all subsequent amendments, all written statements with respect to the proposed rule change that are filed with the Commission, and all written communications relating to the proposed rule change between the Commission and any person, other than those that may be withheld from the public in accordance with the provisions of 5 U.S.C. 552, will be available for website viewing and printing in the Commission's Public Reference Room, 100 F Street NE, Washington, DC 20549, on official business days between the hours of 10:00 a.m. and 3:00 p.m. Copies of the filing also will be available for inspection and copying at the principal office of the Exchange. All comments received will be posted without change. Persons submitting comments are cautioned that we do not redact or edit personal identifying information from comment submissions. You should submit only information that you wish to make available publicly. All submissions should refer to File Number SR–MEMX–2020–05 and should be submitted on or before October 1, 2020.

For the Commission, by the Division of Trading and Markets, pursuant to delegated authority.[24]

J. Matthew DeLesDernier,

Assistant Secretary.

[FR Doc. 2020–19943 Filed 9–9–20; 8:45 am]

BILLING CODE 8011–01–P

[18] 15 U.S.C. 78s(b)(3)(A).

[19] 17 CFR 240.19b–4(f)(6). In addition, Rule 19b–4(f)(6)(iii) requires a self-regulatory organization to give the Commission written notice of its intent to file the proposed rule change, along with a brief description and text of the proposed rule change, at least five business days prior to the date of filing of the proposed rule change, or such shorter time as designated by the Commission. The Exchange has satisfied this requirement.

[20] 17 CFR 240.19b–4(f)(6).

[21] 17 CFR 240.19b–4(f)(6)(iii).

[22] For purposes only of waiving the 30-day operative delay, the Commission also has considered the proposed rule's impact on efficiency, competition, and capital formation. *See* 15 U.S.C. 78c(f).

[23] 15 U.S.C. 78s(b)(2)(B).

[24] 17 CFR 200.30–3(a)(12).

SECURITIES AND EXCHANGE COMMISSION

[Investment Company Act Release No. 33959A; 812–14997]

1WS Credit Income Fund, et al.

September 4, 2020.

AGENCY: Securities and Exchange Commission (''Commission'').

ACTION: Notice.

Notice of application for an order under section 17(d) of the Investment Company Act of 1940 (the ''Act'') and rule 17d–1 under the Act permitting certain joint transactions otherwise prohibited by section 17(d) of the Act and under rule 17d–1 under the Act.

SUMMARY OF APPLICATION: Applicants request an order to permit certain closed-end management investment companies to co-invest in portfolio companies with each other and with affiliated investment funds.

APPLICANTS: 1WS Credit Income Fund (''1WS'' or the ''Existing Regulated Fund''), 1WS Capital Advisors, LLC (''1WS Capital'' or the ''Existing 1WS Adviser''), the investment adviser to 1WS, on behalf of itself and its successors,[1] One William Street Capital Master Fund, Ltd., OWS Credit Opportunity Master Fund, Ltd., OWS ABS Master Fund II, LP, OWS COF I Master, L.P., OWS ABS IV, LP, OWS Global Fixed Income Fund (USD-Hedged), Ltd., OWS Credit Opportunity Fund, L.P., One William Street Capital Partners, L.P., One William Street Capital Partners II, L.P., One William Street Capital Offshore Fund, Ltd., OWS Capital Offshore Fund II, Ltd, One William Street Capital Intermediate Fund, L.P., OWS Credit Opportunity Offshore Fund, Ltd., OWS Credit Opportunity Offshore Fund II, Ltd, OWS

[1] The term ''successor,'' as applied to the Adviser, means an entity that results from a reorganization into another jurisdiction or change in the type of business organization.

Credit Opportunity Offshore Fund III, Ltd, OWS Credit Opportunity Intermediate Fund, LP, OWS Credit Opportunity I, LLC, OWS COF I, Ltd., OWS ABS Fund II, Ltd. and OWS ABS Fund V, Ltd.

FILING DATES: The application was filed on January 11, 2019, and amended on May 21, 2019, June 17, 2019, May 29, 2020, and September 1, 2020.

HEARING OR NOTIFICATION OF HEARING: An order granting the requested relief will be issued unless the Commission orders a hearing. Interested persons may request a hearing by emailing the Commission's Secretary at *Secretarys-Office@sec.gov* and serving applicants with a copy of the request by email. Hearing requests should be received by the Commission by 5:30 p.m. on September 29, 2020, and should be accompanied by proof of service on the applicants, in the form of an affidavit, or, for lawyers, a certificate of service. Pursuant to rule 0–5 under the Act, hearing requests should state the nature of the writer's interest, any facts bearing upon the desirability of a hearing on the matter, the reason for the request, and the issues contested. Persons who wish to be notified of a hearing may request notification by emailing the Commission's Secretary at *Secretarys-Office@sec.gov.*

ADDRESSES: The Commission: *Secretarys-Office@sec.gov.* Applicants: c/o Kurt A. Locher, 1WS Capital Advisors, LLC, *legal@owslp.com.*

FOR FURTHER INFORMATION CONTACT: Asaf Barouk, Attorney Adviser, at (202) 551–4029 or David Nicolardi, Branch Chief, at (202) 551–6825 (Division of Investment Management, Chief Counsel's Office).

SUPPLEMENTARY INFORMATION: The following is a summary of the application. The complete application may be obtained via the Commission's website by searching for the file number, or for an applicant using the Company name box, at *http://www.sec.gov/search/search.htm* or by calling (202) 551–8090.

Applicants' Representations

1. 1WS is a Delaware statutory trust, registered as a non-diversified, closed-end management investment company that has elected to operate as an interval fund pursuant to Rule 23c–3 under the Act. 1WS' Objectives and Strategies [2] are to seek attractive risk-adjusted total returns through generating income and capital appreciation. The Board [3] of 1WS is comprised of 3 trustees, 2 of whom are Non-Interested Trustees.[4]

2. 1WS Capital is an investment adviser that is registered with the Commission under the Investment Advisers Act of 1940 (the ''Advisers Act''). 1WS Capital is controlled by its sole managing member, One William Street Capital Management, L.P. 1WS Capital serves as investment adviser to 1WS and manages 1WS' portfolio in accordance with 1WS' Objectives and Strategies.

3. An Existing Affiliated Fund is an entity whose investment adviser is One William Street Capital Management, L.P., the managing member of 1WS Adviser and that would be an investment company but for section 3(c)(1) or 3(c)(7) of the Act.[5]

4. Applicants seek an order (''Order'') to permit one or more Regulated Funds [6] and/or one or more Affiliated Funds [7] to participate in the same investment opportunities through a proposed co-investment program (the ''Co-Investment Program'') where such participation would otherwise be prohibited under section 17(d) and rule 17d–1 by (a) co-investing with each other in securities issued by issuers in private placement transactions in which an Adviser negotiates terms in addition to price (''Private Placement Securities'') [8] and (b) making additional investments in securities of such issuers, including through the exercise of warrants, conversion privileges, and other rights to purchase securities of the issuers (''Follow-On Investments''). ''Co-Investment Transaction'' means any transaction in which a Regulated Fund (or its Wholly-Owned Investment Sub (as defined below) participates together with one or more other Regulated Funds and/or one or more Affiliated Funds in reliance on the requested Order. ''Potential Co-Investment Transaction'' means any investment opportunity in which a Regulated Fund (or its Wholly-Owned Investment Sub) could not participate together with one or more Affiliated Funds and/or one or more other Regulated Funds without obtaining and relying on the Order.[9]

5. Applicants state that any of the Regulated Funds may, from time to time, form a special purpose subsidiary (a ''Wholly-Owned Investment Sub'').[10] With respect to each Wholly-Owned Investment Sub, such a subsidiary would be prohibited from investing in a Co-Investment Transaction with any Affiliated Fund or Regulated Fund because it would be a company controlled by its parent Regulated Fund for purposes of rule 17d–1 of the Act. Applicants request that each Wholly-Owned Investment Sub be permitted to participate in Co-Investment Transactions in lieu of its parent Regulated Fund and that the Wholly-Owned Investment Sub's participation in any such transaction be treated, for purposes of the Order, as though the parent Regulated Fund were participating directly.

6. Applicants represent that this treatment is justified because a Wholly-Owned Investment Sub would have no purpose other than serving as a holding vehicle for the Regulated Fund's investments and, therefore, no conflicts of interest could arise between the Regulated Fund and the Wholly-Owned Investment Sub. The Regulated Fund's

[2] ''Objectives and Strategies'' means a Regulated Fund's investment objectives and strategies, as described in the Regulated Fund's most current registration statement on Form N–2 or, as applicable, other filings the Regulated Fund has made with the Commission under the Securities Act of 1933 (the ''1933 Act''), or under the Securities Exchange Act of 1934, as amended, and the Regulated Fund's reports to shareholders.

[3] The term ''Board'' refers to the board of directors or trustees of any Regulated Fund.

[4] The term ''Non-Interested Trustees'' refers to the trustees of any Regulated Fund who are not ''interested persons'' within the meaning of section 2(a)(19) of the Act.

[5] ''1WS Adviser'' means the Existing 1WS Adviser, or its managing member, One William Street Capital Management, L.P., and any current or future investment adviser that (i) controls, is controlled by, or is under common control with 1WS Capital, (ii) is registered as an investment adviser under the Advisers Act, and (iii) is not a Regulated Fund or a subsidiary of a Regulated Fund. The term ''Adviser'' means any 1WS Adviser.

[6] ''Regulated Fund'' means the Existing Regulated Fund and any Future Regulated Fund. ''Future Regulated Fund'' means any closed-end management investment company (a) that is registered under the Act, (b) whose investment adviser is 1WS Adviser or its managing member, One William Street Capital Management, L.P., and (c) that intends to participate in the Co-Investment Program.

[7] ''Affiliated Funds'' means the Existing Affiliated Funds and any Future Affiliated Fund. ''Future Affiliated Fund'' means any entity (a) whose investment adviser is a 1WS Adviser, (b) that would be an investment company but for section 3(c)(1) or 3(c)(7) of the Act, and (c) that intends to participate in the Co-Investment Program.

[8] The term ''private placement transactions'' means transactions in which the offer and sale of securities by the issuer are exempt from registration under the 1933 Act, as amended.

[9] All existing entities that currently intend to rely upon the requested Order have been named as applicants. Any other existing or future entity that subsequently relies on the Order will comply with the terms and conditions of the application.

[10] The term ''Wholly-Owned Investment Sub'' means an entity (a) that is wholly-owned by a Regulated Fund (with the Regulated Fund at all times holding, beneficially and of record, 100% of the voting and economic interests); (b) whose sole business purpose is to hold one or more investments on behalf of the Regulated Fund; (c) with respect to which the Regulated Fund's Board has the sole authority to make all determinations with respect to the entity's participation under the conditions of the application; and (d) that would be an investment company but for section 3(c)(1) or 3(c)(7) of the Act. Any future subsidiaries of the Regulated Funds that participate in Co-Investment Transactions will be Wholly-Owned Investment Subs.

Board would make all relevant determinations under the Conditions with regard to a Wholly-Owned Investment Sub's participation in a Co-Investment Transaction, and the Regulated Fund's Board would be informed of, and take into consideration, any proposed use of a Wholly-Owned Investment Sub in the Regulated Fund's place. If the Regulated Fund proposes to participate in the same Co-Investment Transaction with any of its Wholly-Owned Investment Subs, the Board will also be informed of, and take into consideration, the relative participation of the Regulated Fund and the Wholly-Owned Investment Sub.[11]

7. When considering Potential Co-Investment Transactions for any Regulated Fund, the applicable Adviser will consider only the Objectives and Strategies, investment policies, investment positions, capital available for investment (''Available Capital''),[12] and other pertinent factors applicable to that Regulated Fund. The Board of each Regulated Fund, including the Non-Interested Trustees, has determined that it is in the best interests of the Regulated Fund to participate in Co-Investment Transactions.[13]

8. Other than pro rata dispositions and Follow-On Investments as provided in Conditions 7 and 8, and after making the determinations required in Conditions 1 and 2(a), the Adviser will present each Potential Co-Investment Transaction and the proposed allocation to the Eligible Trustees, and the Required Majority will approve each Co-Investment Transaction prior to any investment by the participating Regulated Fund.

9. With respect to the pro rata dispositions and Follow-On Investments provided in Conditions 7 and 8, a Regulated Fund may participate in a pro rata disposition or Follow-On Investment without obtaining prior approval of the Required Majority if, among other things: (i) The proposed participation of each Regulated Fund and Affiliated Fund in such disposition or Follow on Investment is proportionate to its outstanding investments in the issuer immediately preceding the disposition or Follow-On Investment, as the case may be; and (ii) the Board of the Regulated Fund has approved that Regulated Fund's participation in pro rata dispositions and Follow-On Investments as being in the best interests of the Regulated Fund. If the Board does not so approve, any such disposition or Follow-On Investment will be submitted to the Regulated Fund's Eligible Trustees. The Board of any Regulated Fund may at any time rescind, suspend or qualify its approval of pro rata dispositions and Follow-On Investments with the result that all dispositions and/or Follow-On Investments must be submitted to the Eligible Trustees.

10. No Non-Interested Trustee of a Regulated Fund will have a financial interest in any Co-Investment Transaction, other than indirectly through share ownership in one of the Regulated Funds.

11. If the Adviser, the Principals,[14] or any person controlling, controlled by, or under common control with the Adviser or the Principals, and the Affiliated Funds (collectively, the ''Holders'') own in the aggregate more than 25 percent of the outstanding voting shares of a Regulated Fund (the ''Shares''), then the Holders will vote such Shares as required under Condition 14.

Applicants' Legal Analysis

1. Section 17(d) of the Act and rule 17d–1 under the Act prohibit affiliated persons of a registered investment company from participating in joint transactions with the company unless the Commission has granted an order permitting such transactions. In passing upon applications under rule 17d–1, the Commission considers whether the company's participation in the joint transaction is consistent with the provisions, policies, and purposes of the Act and the extent to which such participation is on a basis different from or less advantageous than that of other participants.

2. Applicants state that in the absence of the requested relief, in some circumstances, the Regulated Funds would be limited in their ability to participate in attractive and appropriate investment opportunities. Applicants believe that the proposed terms and conditions set forth in the application ensure that the proposed Co-Investment Transactions are consistent with the protection of each Regulated Fund's shareholders and with the purposes intended by the policies and provisions of the Act. Applicants believe that the participation of the Regulated Funds in Co-Investment Transactions done in accordance with the Conditions would be consistent with the provisions, policies, and purposes of the Act and would be done in a manner that was not different from, or less advantageous than, the other participants.

Applicants' Conditions

Applicants agree that the Order granting the requested relief shall be subject to the following Conditions:

1. Each time a 1WS Adviser considers a Potential Co-Investment Transaction for an Affiliated Fund or another Regulated Fund that falls within a Regulated Fund's then-current Objectives and Strategies, the Regulated Fund's Adviser will make an independent determination of the appropriateness of the investment for such Regulated Fund in light of the Regulated Fund's then-current circumstances.

2. (a) If the Adviser deems a Regulated Fund's participation in any Potential Co-Investment Transaction to be appropriate for the Regulated Fund, it will then determine an appropriate level of investment for the Regulated Fund.

(b) If the aggregate amount recommended by the applicable Adviser to be invested by the applicable Regulated Fund in the Potential Co-Investment Transaction, together with the amount proposed to be invested by the other participating Regulated Funds and Affiliated Funds, collectively, in the same transaction, exceeds the amount of the investment opportunity, the investment opportunity will be allocated among them pro rata based on each participant's Available Capital, up to the amount proposed to be invested by each. The applicable Adviser will provide the Eligible Trustees of each participating Regulated Fund with information concerning each participating party's Available Capital to assist the Eligible Trustees with their review of the Regulated Fund's investments for compliance with these allocation procedures.

(c) After making the determinations required in Conditions 1 and 2(a), the applicable Adviser will distribute written information concerning the Potential Co-Investment Transaction (including the amount proposed to be invested by each participating Regulated Fund and Affiliated Fund) to the Eligible Trustees of each participating

[11] The participation of a Regulated Fund in a Potential Co-Investment Transaction may only be approved by both a majority of the trustees of the Board who have no financial interest in such transaction, plan, or arrangement and a majority of such trustees of the Board who are Non-Interested Trustees (a ''Required Majority'') eligible to vote on that Co-Investment Transaction (the ''Eligible Trustees'').

[12] The amount of each Regulated Fund's Available Capital will be determined based on the amount of cash on hand, existing commitments and reserves, if any, the targeted leverage level, targeted asset class mix and other investment policies and restrictions set from time to time by the Board of the applicable Regulated Fund or imposed by applicable laws, rules, regulations or interpretations.

[13] The Regulated Funds, however, will not be obligated to invest, or co-invest, when investment opportunities are referred to them.

[14] Certain employees and principals of 1WS Adviser (collectively, the ''Principals'').

Regulated Fund for their consideration. A Regulated Fund will co-invest with one or more other Regulated Funds and/or one or more Affiliated Funds only if, prior to the Regulated Funds' participation in the Potential Co-Investment Transaction, a Required Majority concludes that:

(i) The terms of the Potential Co-Investment Transaction, including the consideration to be paid, are reasonable and fair to the Regulated Fund and its shareholders and do not involve overreaching in respect of the Regulated Fund or its shareholders on the part of any person concerned;

(ii) the Potential Co-Investment Transaction is consistent with:

(A) The interests of the shareholders of the Regulated Fund; and

(B) the Regulated Fund's then-current Objectives and Strategies;

(iii) the investment by any other Regulated Funds or Affiliated Funds would not disadvantage the Regulated Fund, and participation by the Regulated Fund would not be on a basis different from or less advantageous than that of other Regulated Funds or Affiliated Funds; provided that, if any other Regulated Fund or Affiliated Fund, but not the Regulated Fund itself, gains the right to nominate a director for election to a portfolio company's board of directors or the right to have a board observer or any similar right to participate in the governance or management of the portfolio company, such event shall not be interpreted to prohibit the Required Majority from reaching the conclusions required by this Condition (2)(c)(iii), if:

(A) The Eligible Trustees will have the right to ratify the selection of such director or board observer, if any;

(B) the applicable Adviser agrees to, and does, provide periodic reports to the Regulated Fund's Board with respect to the actions of such director or the information received by such board observer or obtained through the exercise of any similar right to participate in the governance or management of the portfolio company; and

(C) any fees or other compensation that any Affiliated Fund or any Regulated Fund or any affiliated person of any Affiliated Fund or any Regulated Fund receives in connection with the right of an Affiliated Fund or a Regulated Fund to nominate a director or appoint a board observer or otherwise to participate in the governance or management of the portfolio company will be shared proportionately among the participating Affiliated Funds (who each may, in turn, share its portion with its affiliated persons) and the participating Regulated Funds in accordance with the amount of each party's investment; and

(iv) the proposed investment by the Regulated Fund will not benefit the Adviser, the Affiliated Funds or the other Regulated Funds or any affiliated person of any of them (other than the parties to the Co-Investment Transaction), except (A) to the extent permitted by Condition 13, (B) to the extent permitted by section 17(e) of the Act, as applicable, (C) indirectly, as a result of an interest in the securities issued by one of the parties to the Co-Investment Transaction, or (D) in the case of fees or other compensation described in Condition 2(c)(iii)(C).

3. Each Regulated Fund has the right to decline to participate in any Potential Co-Investment Transaction or to invest less than the amount proposed.

4. The applicable Adviser will present to the Board of each Regulated Fund, on a quarterly basis, a record of all investments in Potential Co-Investment Transactions made by any of the other Regulated Funds or Affiliated Funds during the preceding quarter that fell within the Regulated Fund's then-current Objectives and Strategies that were not made available to the Regulated Fund, and an explanation of why the investment opportunities were not offered to the Regulated Fund. All information presented to the Board pursuant to this Condition will be kept for the life of the Regulated Fund and at least two years thereafter, and will be subject to examination by the Commission and its staff.

5. Except for Follow-On Investments made in accordance with Condition 8,[15] a Regulated Fund will not invest in reliance on the Order in any issuer in which another Regulated Fund, Affiliated Fund, or any affiliated person of another Regulated Fund or Affiliated Fund is an existing investor.

6. A Regulated Fund will not participate in any Potential Co-Investment Transaction unless the terms, conditions, price, class of securities to be purchased, settlement date, and registration rights will be the same for each participating Regulated Fund and Affiliated Fund. The grant to an Affiliated Fund or another Regulated Fund, but not the Regulated Fund, of the right to nominate a director for election to a portfolio company's board of directors, the right to have an observer on the board of directors or similar rights to participate in the governance or management of the portfolio company will not be interpreted so as to violate this Condition 6, if Conditions 2(c)(iii)(A), (B) and (C) are met.

7. (a) If any Affiliated Fund or any Regulated Fund elects to sell, exchange or otherwise dispose of an interest in a security that was acquired in a Co-Investment Transaction, the applicable Adviser will:

(i) Notify each Regulated Fund that participated in the Co-Investment Transaction of the proposed disposition at the earliest practical time; and

(ii) formulate a recommendation as to participation by each Regulated Fund in the disposition.

(b) Each Regulated Fund will have the right to participate in such disposition on a proportionate basis, at the same price and on the same terms and conditions as those applicable to the participating Affiliated Funds and Regulated Funds.

(c) A Regulated Fund may participate in such disposition without obtaining prior approval of the Required Majority if: (i) The proposed participation of each Regulated Fund and each Affiliated Fund in such disposition is proportionate to its outstanding investments in the issuer immediately preceding the disposition; (ii) the Board of the Regulated Fund has approved as being in the best interests of the Regulated Fund the ability to participate in such dispositions on a pro rata basis (as described in greater detail in the application); and (iii) the Board of the Regulated Fund is provided on a quarterly basis with a list of all dispositions made in accordance with this Condition. In all other cases, the Adviser will provide its written recommendation as to the Regulated Fund's participation to the Eligible Trustees, and the Regulated Fund will participate in such disposition solely to the extent that a Required Majority determines that it is in the Regulated Fund's best interests.

(d) Each Affiliated Fund and each Regulated Fund will bear its own expenses in connection with any such disposition.

8. (a) If any Affiliated Fund or any Regulated Fund desires to make a Follow-On Investment in a portfolio company whose securities were acquired in a Co-Investment Transaction, the applicable Adviser will:

(i) Notify each Regulated Fund that participated in the Co-Investment Transaction of the proposed transaction at the earliest practical time; and

(ii) formulate a recommendation as to the proposed participation, including

[15] This exception applies only to Follow-On Investments by a Regulated Fund in issuers in which that Regulated Fund already holds investments.

the amount of the proposed Follow-On Investment, by each Regulated Fund.

(b) A Regulated Fund may participate in such Follow-On Investment without obtaining prior approval of the Required Majority if: (i) The proposed participation of each Regulated Fund and each Affiliated Fund in such investment is proportionate to its outstanding investments in the issuer immediately preceding the Follow-On Investment; and (ii) the Board of the Regulated Fund has approved as being in the best interests of the Regulated Fund the ability to participate in Follow-On Investments on a pro rata basis (as described in greater detail in the application). In all other cases, the Adviser will provide its written recommendation as to the Regulated Fund's participation to the Eligible Trustees, and the Regulated Fund will participate in such Follow-On Investment solely to the extent that a Required Majority determines that it is in the Regulated Fund's best interests.

(c) If, with respect to any Follow-On Investment:

(i) The amount of the opportunity is not based on the Regulated Funds' and the Affiliated Funds' outstanding investments immediately preceding the Follow-On Investment; and

(ii) the aggregate amount recommended by the applicable Adviser to be invested by the applicable Regulated Fund in the Follow-On Investment, together with the amount proposed to be invested by the other participating Regulated Funds and Affiliated Funds, collectively, in the same transaction, exceeds the amount of the investment opportunity, then the investment opportunity will be allocated among them pro rata based on each participant's Available Capital, up to the maximum amount proposed to be invested by each.

(d) The acquisition of Follow-On Investments as permitted by this Condition will be considered a Co-Investment Transaction for all purposes and subject to the other Conditions set forth in the application.

9. The Non-Interested Trustees of each Regulated Fund will be provided quarterly for review all information concerning Potential Co-Investment Transactions and Co-Investment Transactions, including investments made by other Regulated Funds or Affiliated Funds that the Regulated Fund considered but declined to participate in, so that the Non-Interested Trustees may determine whether all investments made during the preceding quarter, including those investments that the Regulated Fund considered but declined to participate in, comply with the Conditions of the Order. In addition, the Non-Interested Trustees will consider at least annually the continued appropriateness for the Regulated Fund of participating in new and existing Co-Investment Transactions.

10. Each Regulated Fund will maintain the records required by section 57(f)(3) of the Act as if each of the Regulated Funds were a business development company (as defined in section 2(a)(48) of the Act) and each of the investments permitted under these Conditions were approved by the Required Majority under section 57(f) of the Act.

11. No Non-Interested Trustee of a Regulated Fund will also be a director, general partner, managing member or principal, or otherwise an ''affiliated person'' (as defined in the Act) of an Affiliated Fund.

12. The expenses, if any, associated with acquiring, holding or disposing of any securities acquired in a Co-Investment Transaction (including, without limitation, the expenses of the distribution of any such securities registered for sale under the 1933 Act) will, to the extent not payable by the Advisers under their respective investment advisory agreements with the Affiliated Funds and the Regulated Funds, be shared by the Regulated Funds and the Affiliated Funds in proportion to the relative amounts of the securities held or to be acquired or disposed of, as the case may be.

13. Any transaction fee [16] (including break-up or commitment fees but excluding broker's fees contemplated by section 17(e) of the Act, as applicable), received in connection with a Co-Investment Transaction will be distributed to the participating Regulated Funds and Affiliated Funds on a pro rata basis based on the amounts they invested or committed, as the case may be, in such Co-Investment Transaction. If any transaction fee is to be held by an Adviser pending consummation of the transaction, the fee will be deposited into an account maintained by such Adviser at a bank or banks having the qualifications prescribed in section 26(a)(1) of the Act, and the account will earn a competitive rate of interest that will also be divided pro rata among the participating Regulated Funds and Affiliated Funds based on the amounts they invest in such Co-Investment Transaction. None of the Affiliated Funds, the Advisers, the other Regulated Funds or any affiliated person of the Regulated Funds or Affiliated Funds will receive additional compensation or remuneration of any kind as a result of or in connection with a Co-Investment Transaction (other than (a) in the case of the Regulated Funds and the Affiliated Funds, the pro rata transaction fees described above and fees or other compensation described in Condition 2(c)(iii)(C); and (b) in the case of an Adviser, investment advisory fees paid in accordance with the agreement between the Adviser and the Regulated Fund or Affiliated Fund.

14. If the Holders own in the aggregate more than 25 percent of the Shares of a Regulated Fund, then the Holders will vote such Shares in the same percentages as the Regulated Fund's other shareholders (not including the Holders) when voting on (1) the election of directors; (2) the removal of one or more directors; or (3) any other matter under either the Act or applicable state law affecting the Board's composition, size or manner of election.

15. Each Regulated Fund's chief compliance officer, as defined in rule 38a–1(a)(4) under the Act, will prepare an annual report for its Board that evaluates (and documents the basis of that evaluation) the Regulated Fund's compliance with the terms and conditions of the application and the procedures established to achieve such compliance.

For the Commission, by the Division of Investment Management, under delegated authority.

J. Matthew DeLesDernier,

Assistant Secretary.

[FR Doc. 2020–20026 Filed 9–9–20; 8:45 am]

BILLING CODE 8011–01–P

[16] Applicants are not requesting and the staff is not providing any relief for transaction fees received in connection with any Co-Investment Transaction.

SURFACE TRANSPORTATION BOARD

[Docket No. EP 670 (Sub–No. 1)]

Notice of Rail Energy Transportation Advisory Committee Meeting

AGENCY: Surface Transportation Board.

ACTION: Notice of Rail Energy Transportation Advisory Committee meeting.

SUMMARY: Notice is hereby given of a meeting of the Rail Energy Transportation Advisory Committee (RETAC), pursuant to the Federal Advisory Committee Act.

DATES: The meeting will be held on Wednesday, October 7, 2020, beginning at 9:00 a.m. E.D.T., and is expected to conclude by noon E.D.T.

ADDRESSES: The meeting will be held virtually via Zoom. See **SUPPLEMENTARY INFORMATION** for registration details.

FOR FURTHER INFORMATION CONTACT: Kristen Nunnally at (202) 245–0312 or *Kristen.Nunnally@stb.gov.* Assistance for the hearing impaired is available through the Federal Relay Service at (800) 877–8339.

SUPPLEMENTARY INFORMATION: RETAC was formed in 2007 to provide advice and guidance to the Board, and to serve as a forum for discussion of emerging issues related to the transportation of energy resources by rail, including coal, ethanol, and other biofuels. *Establishment of a Rail Energy Transp. Advisory Comm.,* EP 670 (STB served July 17, 2007). The purpose of this meeting is to facilitate discussions regarding issues of interest, including rail service, infrastructure planning and development, and effective coordination among suppliers, rail carriers, and users of energy resources. Agenda items for this meeting may include a rail performance measures review, industry segment updates by RETAC members, and a roundtable discussion.

The meeting, which is open to the public via Zoom, will be conducted in accordance with the Federal Advisory Committee Act, 5 U.S.C. app. 2; Federal Advisory Committee Management regulations, 41 CFR pt. 102–3; the RETAC charter; and Board procedures. Members of the public who wish to attend this meeting must register in advance of the meeting. The registration link is provided on the Board's website at *https://prod.stb.gov/resources/stakeholder-committees/retac/.* Registrations will be accepted on a space-available basis. Any further communications about this meeting will be announced through the Board's website at *www.stb.gov.*

Written Comments: Members of the public may submit written comments to RETAC at any time. Comments should be addressed to RETAC, c/o Kristen Nunnally, Surface Transportation Board, 395 E Street SW, Washington, DC 20423–0001 or *Kristen.Nunnally@stb.gov.*

Authority: 49 U.S.C. 1321, 49 U.S.C. 11101; 49 U.S.C. 11121.

Decided: September 4, 2020.

By the Board, Allison C. Davis, Director, Office of Proceedings.

Jeffrey Herzig,

Clearance Clerk.

[FR Doc. 2020–20014 Filed 9–9–20; 8:45 am]

BILLING CODE 4915–01–P

SURFACE TRANSPORTATION BOARD

[Docket No. AB 33 (Sub–No. 343X)]

Union Pacific Railroad Company—Abandonment Exemption—in Harris County, Tex.

Union Pacific Railroad Company (UP) has filed a verified notice of exemption under 49 CFR part 1152 subpart F—*Exempt Abandonments* to abandon rail service over an approximately 1.24-mile portion of the Houston Navigation Lead, from milepost 0.98 to milepost 1.31 and from milepost 1.71 to milepost 2.62, in Harris County, Tex. (the Line). The Line traverses U.S. Postal Service Zip Codes 77002 and 77003.

UP has certified that: (1) No local traffic has moved over the Line for at least two years; (2) no overhead traffic has moved over the Line for at least two years and there is therefore no need to reroute any traffic; (3) no formal complaint filed by a user of rail service on the Line (or by a state or local government entity acting on behalf of such user) regarding cessation of service over the Line is pending either with the Surface Transportation Board (Board) or any U.S. District Court or has been decided in favor of a complainant within the two-year period; and (4) the requirements at 49 CFR 1105.12 (newspaper publication), 49 CFR 1152.50(d)(1) (notice to governmental agencies), and 49 CFR 1105.7 and 1105.8 (environmental and historic report) have been met.

As a condition to this exemption, any employee adversely affected by the abandonment shall be protected under *Oregon Short Line Railroad—Abandonment Portion Goshen Branch Between Firth & Ammon, in Bingham & Bonneville Counties, Idaho,* 360 I.C.C. 91 (1979). To address whether this condition adequately protects affected employees, a petition for partial revocation under 49 U.S.C. 10502(d) must be filed.

Provided no formal expression of intent to file an offer of financial assistance (OFA) [1] has been received, this exemption will be effective on October 10, 2020, unless stayed pending reconsideration. Petitions to stay that do not involve environmental issues [2] must be filed by September 18, 2020, and formal expressions of intent to file an OFA under 49 CFR 1152.27(c)(2) and interim trail use/rail banking requests under 49 CFR 1152.29 must be filed by September 21, 2020.[3] Petitions to reopen or requests for public use conditions under 49 CFR 1152.28 must be filed by September 30, 2020, with the Surface Transportation Board, 395 E Street SW, Washington, DC 20423–0001.

A copy of any petition filed with Board should be sent to UP's representative, Jeremy Berman, 1400 Douglas St. #1580, Omaha, NE 68179.

If the verified notice contains false or misleading information, the exemption is void ab initio.

UP has filed a combined environmental and historic report that addresses the potential effects of the abandonment on the environment and historic resources. OEA will issue a Draft Environmental Assessment (Draft EA) by September 15, 2020. The Draft EA will be available to interested persons on the Board's website, by writing to OEA, or by calling OEA at (202) 245–0305. Assistance for the hearing impaired is available through the Federal Relay Service at (800) 877–8339. Comments on environmental and historic preservation matters must be filed within 15 days after the Draft EA becomes available to the public.

Environmental, historic preservation, public use, or trail use/rail banking conditions will be imposed, where appropriate, in a subsequent decision.

Pursuant to the provisions of 49 CFR 1152.29(e)(2), UP shall file a notice of consummation with the Board to signify that it has exercised the authority granted and fully abandoned the Line. If consummation has not been effected by UP's filing a notice of consummation by September 10, 2021, and there are no legal or regulatory barriers to consummation, the authority to abandon will automatically expire.

Board decisions and notices are available at *www.stb.gov.*

Decided: September 4, 2020.

By the Board, Allison C. Davis, Director, Office of Proceedings.

Regena Smith-Bernard,

Clearance Clerk.

[FR Doc. 2020–20017 Filed 9–9–20; 8:45 am]

BILLING CODE 4915–01–P

[1] Persons interested in submitting an OFA must first file a formal expression of intent to file an offer, indicating the type of financial assistance they wish to provide (*i.e.,* subsidy or purchase) and demonstrating that they are preliminarily financially responsible. *See* 49 CFR 1152.27(c)(2)(i).

[2] The Board will grant a stay if an informed decision on environmental issues (whether raised by a party or by the Board's Office of Environmental Analysis (OEA) in its independent investigation) cannot be made before the exemption's effective date. *See Exemption of Out-of-Serv. Rail Lines,* 5 I.C.C.2d 377 (1989). Any request for a stay should be filed as soon as possible so that the Board may take appropriate action before the exemption's effective date.

[3] Filings fees for OFAs and trail use requests can be found at 49 CFR 1002.2(f)(25) and (27), respectively.

OFFICE OF THE UNITED STATES TRADE REPRESENTATIVE

[Docket Number USTR–2020–0034]

Request for Comments To Compile the National Trade Estimate Report on Foreign Trade Barriers

AGENCY: Office of the United States Trade Representative.

ACTION: Notice.

SUMMARY: The Office of the United States Trade Representative (USTR), through the Trade Policy Staff Committee (TPSC), publishes the National Trade Estimate Report on Foreign Trade Barriers (NTE Report) each year. USTR invites comments to assist it and the TPSC in identifying significant barriers to U.S. exports of goods and services, U.S. foreign direct investment, and the protection and enforcement of intellectual property rights for inclusion in the NTE Report. USTR also will consider responses to this notice as part of the annual review of the operation and effectiveness of all U.S. trade agreements regarding telecommunications products and services that are in force with respect to the United States.

DATES: The deadline for submission of comments is October 29, 2020 at midnight EST.

ADDRESSES: USTR strongly prefers electronic submissions made through the Federal eRulemaking Portal: *http://www.regulations.gov* (*Regulations.gov*). The instructions for submitting comments are in section IV below. The docket number is USTR–2020–0034. For alternatives to on-line submissions, please contact Yvonne Jamison at *Yvonne_D_Jamison@ustr.eop.gov* or (202) 395–3475 before transmitting a comment and in advance of the deadline.

FOR FURTHER INFORMATION CONTACT: Yvonne Jamison at *Yvonne_D_Jamison@ustr.eop.gov* or (202) 395–3475.

SUPPLEMENTARY INFORMATION:

I. Background

Section 181 of the Trade Act of 1974, as amended (19 U.S.C. 2241), requires USTR annually to publish the NTE Report, which sets out an inventory of the most significant foreign barriers affecting U.S. exports of goods and services, including agricultural commodities, U.S. intellectual property, U.S. foreign direct investment by U.S. persons, especially if such investment has implications for trade in goods or services, and U.S. electronic commerce. The inventory facilitates U.S. negotiations aimed at reducing or eliminating these barriers and is a valuable tool in enforcing U.S. trade laws and strengthening the rules-based trading system. You can find the 2020 NTE Report on USTR's website at *https://www.ustr.gov* under the tab 'Reports and Publications.' To ensure compliance with the statutory mandate for the NTE Report and the Administration's commitment to focus on the most significant foreign trade barriers, USTR will take comments in response to this notice into account in deciding which restrictions to include in the NTE Report.

II. Topics on Which the TPSC Seeks Information

To assist USTR in preparing the NTE Report, commenters should submit information related to one or more of the following categories of foreign trade barriers:

1. *Import policies.* Examples include tariffs and other import charges, quantitative restrictions, import licensing, pre-shipment inspection, customs barriers and shortcomings in trade facilitation or in valuation practices, and other market access barriers.

2. *Technical barriers to trade.* Examples include unnecessarily trade restrictive or discriminatory standards, conformity assessment procedures, labeling, or technical regulations, including unnecessary or discriminatory technical regulations or standards for telecommunications products.

3. *Sanitary and phytosanitary measures.* Examples include trade restrictions implemented through unwarranted measures not based on scientific evidence.

4. *Subsidies, especially export subsidies and local content subsidies.* Examples of export subsidies include all subsidies contingent upon export of performance and agricultural export subsidies that displace U.S. exports in third country markets. Examples of local content subsidies include subsidies contingent on the purchase or use of domestic rather than imported goods.

5. *Government procurement restrictions.* Examples include 'buy national policies' and closed bidding.

6. *Intellectual property protection.* Examples include inadequate patent, copyright, and trademark regimes and inadequate enforcement of intellectual property rights.

7. *Services barriers.* Examples include prohibitions or restrictions on foreign participation in the market, discriminatory licensing requirements or regulatory standards, local-presence requirements, and unreasonable restrictions on the types of services that providers may offer.

8. *Barriers to digital trade and electronic commerce.* Examples include barriers to cross-border data flows, including data localization requirements, discriminatory practices affecting trade in digital products, restrictions on the provision of internet-enabled services, and other restrictive technology requirements.

9. *Investment barriers.* Examples include limitations on foreign equity participation and on access to foreign government-funded research and development programs, local content requirements, technology transfer and export performance requirements, and restrictions on repatriation of earnings, capital, fees, and royalties.

10. *Competition.* Examples include government-tolerated anticompetitive conduct of state-owned or private firms that restrict the sale or purchase of U.S. goods or services in the foreign country's markets, or abuse of competition laws to inhibit trade.

11. *Other barriers.* Examples include barriers that encompass more than one category, such as bribery and corruption, or that affect a single sector.

Commenters should submit information related to one or more of the following export markets to be covered in the report: Algeria, Angola, the Arab League, Argentina, Australia, Bahrain, Bangladesh, Bolivia, Brazil, Brunei, Burma, Cambodia, Canada, Chile, China, Colombia, Costa Rica, Cote d'Ivoire, Dominican Republic, Ecuador, Egypt, El Salvador, Ethiopia, the European Union, Ghana, Guatemala, Honduras, Hong Kong, India, Indonesia, Israel, Japan, Jordan, Kenya, Korea, Kuwait, Laos, Malaysia, Mexico, Morocco, New Zealand, Nicaragua, Nigeria, Norway, Oman, Pakistan, Panama, Paraguay, Peru, the Philippines, Qatar, Russia, Saudi Arabia, Singapore, South Africa, Switzerland, Taiwan, Thailand, Tunisia, Turkey, Ukraine, United Arab Emirates, United Kingdom (UK),[1] Uruguay, and Vietnam.

In addition, section 1377 of the Omnibus Trade and Competitiveness Act of 1988 (19 U.S.C. 3106) (section 1377) requires USTR annually to review

[1] *Note:* The UK formally left the European Union (EU) on January 31, 2020. However, under the terms of its Withdrawal Agreement, it remains subject to the EU trade policy regime, including the EU Customs Union and Single Market, until January 1, 2021. During this time, the UK is developing its own domestic trade policy regime. USTR welcomes comments on existing trade barriers in the UK market (as a result of its relationship with the EU) or concerns regarding potential new trade barriers as the UK leaves the EU trade policy regime in 2021.

the operation and effectiveness of U.S. telecommunications trade agreements that are in force with respect to the United States. The purpose of the review is to determine whether any foreign government that is a party to one of those agreements is failing to comply with that government's obligations or is otherwise denying, within the context of a relevant agreement, ''mutually advantageous market opportunities'' to U.S. telecommunication products or services suppliers. USTR will consider responses to this notice in the review called for in section 1377.

Commenters should place particular emphasis on any practices that may violate U.S. trade agreements. USTR also is interested in receiving new or updated information pertinent to the barriers covered in the 2020 NTE Report as well as information on new barriers. If USTR does not include in the 2021 NTE Report information that it receives pursuant to this notice, it will maintain the information for potential use in future discussions or negotiations with trading partners.

III. Estimate of Increase in Exports

Each comment should include an estimate of the potential increase in U.S. exports that would result from removing any foreign trade barrier the comment identifies, as well as a description of the methodology the commenter used to derive the estimate. Commenters should express estimates within the following value ranges: Less than $10 million, $10 million to $25 million, $25 million to $100 million, $100 million to $500 million, and over $500 million. These estimates will help USTR conduct comparative analyses of a barrier's effect over a range of industries.

IV. Requirements for Submissions

Comments must be in English and must identify on the first page of the submission 'Comments Regarding Foreign Trade Barriers to U.S. Exports for 2021 Reporting.' Commenters providing information on foreign trade barriers in more than one country should, whenever possible, provide a separate submission for each country.

The submission deadline is Thursday, October 29, 2020, at midnight EST. USTR strongly encourages commenters to make on-line submissions, using *Regulations.gov.* To submit comments via *Regulations.gov,* enter docket number USTR–2020–0034 on the home page and click 'search.' The site will provide a search-results page listing all documents associated with this docket. Find a reference to this notice and click on the link entitled 'comment now.' For further information on using *Regulations.gov,* please consult the resources provided on the website by clicking on 'How to Use *Regulations.gov*' on the bottom of the home page.

Regulations.gov allows users to submit comments by filling in a 'type comment' field, or by attaching a document using an 'upload file' field. USTR prefers that you provide comments in an attached document. If you attach a document, please identify the name of the country to which the submission pertains in the 'type comment' field, *e.g.,* see attached comments with respect to (name of country). USTR prefers submissions in Microsoft Word (.doc) or Adobe Acrobat (.pdf). If you use an application other than those two, please indicate the name of the application in the 'type comment' field.

Filers submitting comments containing that do not include business confidential information (BCI) should name their file using the name of the person or entity submitting the comments. For any comments submitted electronically that contain BCI, the file name of the business confidential version should begin with the characters 'BCI.' Clearly mark any page containing BCI with 'BUSINESS CONFIDENTIAL' on the top of that page. Filers of submissions containing BCI also must submit a public version of their comments that USTR will place in the docket for public inspection. The file name of the public version should begin with the character 'P.' Follow the 'BCI' and 'P' with the name of the person or entity submitting the comments.

Please do not attach separate cover letters to electronic submissions; rather, include any information that might appear in a cover letter in the comments themselves. Similarly, to the extent possible, please include any exhibits, annexes, or other attachments in the same file as the submission itself, not as separate files.

As noted, USTR strongly urges that you file comments through *Regulations.gov.* You must make any alternative arrangements with Yvonne Jamison at *Yvonne_D_Jamison@ustr.eop.gov* or (202) 395–3475 before transmitting a comment and in advance of the deadline.

USTR will post comments in the docket for public inspection, except properly designated BCI. You can view comments on *Regulations.gov* by entering docket number USTR–2020–0034 in the search field on the home page. General information concerning USTR is available at *https://www.ustr.gov.*

Edward Gresser,

Chair of the Trade Policy Staff Committee, Office of the United States Trade Representative.

[FR Doc. 2020–19985 Filed 9–9–20; 8:45 am]

BILLING CODE 3290–F0–P

DEPARTMENT OF TRANSPORTATION

Federal Aviation Administration

Adoption of Environmental Assessment for Long Range Discrimination Radar Performance Testing, Clear Air Force Station, Alaska, and Finding of No Significant Impact and Record of Decision for Temporary Flight Restrictions.

AGENCY: Federal Aviation Administration (FAA), Department of Transportation.

ACTION: Notice of availability.

SUMMARY: This notice announces the availability of the FAA's *Adoption of Missile Defense Agency Environmental Assessment for Long Range Discrimination Radar (LRDR) Performance Testing, Clear Air Force Station (CAFS), Alaska, and Finding of No Significant Impact and Record of Decision for Temporary Flight Restrictions in the Vicinity of CAFS for LRDR Performance Testing.* This document sets forth: (1) The FAA's adoption of the Missile Defense Agency's (MDA) Environmental Assessment for *Long Range Discrimination Radar (LRDR) Performance Testing, Clear Air Force Station (CAFS), Alaska;* (2) the FAA's finding that no significant environmental effects would result from two proposed temporary flight restrictions (TFRs) the FAA would issue to protect aviation from high-intensity radiated fields generated during the LRDR performance testing; and (3) the FAA's decision to approve the TFRs.

FOR FURTHER INFORMATION CONTACT: Paula Miller, Airspace Policy and Regulations Group, Office of Airspace Services, Federal Aviation Administration, 800 Independence Avenue SW, Washington, DC 20591; telephone: (202) 267–7378.

SUPPLEMENTARY INFORMATION:

Background

MDA prepared a Final Environmental Assessment (FEA) for performance testing of a LRDR at CAFS, Alaska. The FEA includes analysis of the potential environmental effects of two TFRs that

would be issued by the FAA pursuant to Title 14, Code of Federal Regulations, Section 99.7, *Special Security Instructions,* to protect aviation from high-intensity radiated fields generated by the LRDR during the testing. MDA provided a Preliminary FEA for public review from May 4, 2020, to June 2, 2020, and three comments were received. The FEA was issued in July 2020, and MDA and the Department of the Air Force (DAF) issued their Finding of No Significant Impact (FONSI) on July 24, 2020.[1]

The LRDR performance testing would occur for 16 hours a day (specific times to vary by time of year) for 12 to 18 months. During the testing hours, the larger of the two TFRs, which would apply in an area defined as Zone 1 in the FEA, would be continuous (active every day during the testing period); and the other TFR, which would apply in an area defined as in Zone 2 in the FEA, would be non-continuous, active for two hours a day (Tuesdays, Thursdays, and Saturdays, from 2:00 a.m. to 4:00 a.m. local Alaska time). During the activation hours of the TFRs, the existing instrument flight rules arrival and departure procedures at Healy River Airport, and emergency aircraft and medical evacuation flights into and out of Clear Airport, would be available through processes defined in a Letter of Agreement between MDA, CAFS, and the FAA. Also, the FAA would provide notice (via Notices to Airmen [NOTAMs]) of: (1) The unavailability of affected approach procedures at Ted Stevens Anchorage International Airport (ANC); and (2) the unavailability of affected portions of airways V–436 and J–125.

In accordance with regulations of the Council on Environmental Quality (CEQ) implementing the National Environmental Policy Act of 1969 (NEPA), and FAA Order 1050.1F, *Environmental Impacts: Policies and Procedures,* the FAA participated as a cooperating agency on the FEA. In that capacity, the FAA coordinated closely with MDA, provided subject matter expertise, and participated actively in the FEA's preparation.

Consistent with CEQ guidance, FAA Order 1050.1F provides that the FAA may adopt another agency's Environmental Assessment (EA) for the purpose of compliance with NEPA. To do so, the FAA must determine, based on an independent evaluation, that the other agency's EA: (1) Adequately addresses the FAA's action; and (2) meets the applicable standards in FAA Order 1050.1F and CEQ's regulations implementing NEPA.

After independently evaluating the FEA, the FAA has determined that the document adequately addresses the proposed TFRs and meets the applicable standards in FAA Order 1050.1F and CEQ's regulations implementing NEPA. Accordingly, the FAA has adopted the FEA. Based on the information and analysis in the FEA, the FAA has found that the TFRs would not significantly affect the human environment and therefore do not require preparation of an environmental impact statement under NEPA. After considering this and other relevant factors, the FAA has decided to approve the TFRs.

Notice of Availability

The FAA's adoption of the FEA, its finding of no significant environmental impact, and its decision on the TFRs are documented in *Adoption of Missile Defense Agency Environmental Assessment for Long Range Discrimination Radar (LRDR) Performance Testing, Clear Air Force Station, Alaska (CAFS) and Finding of No Significant Impact and Record of Decision for Temporary Flight Restrictions in the Vicinity of CAFS for LRDR Performance Testing* (Adoption/FONSI/ROD). This document and the FEA are available upon request by contacting Paula Miller at: Airspace Policy and Regulations Group, Office of Airspace Services, Federal Aviation Administration, 800 Independence Avenue SW, Washington, DC 20591; telephone: (202) 267–7378.

Right of Appeal

The FAA's Adoption/FONSI/ROD constitutes a final order of the FAA Administrator and is subject to exclusive judicial review under 49 U.S.C. 46110 by the U.S. Circuit Court of Appeals for the District of Columbia or the U.S. Circuit Court of Appeals for the circuit in which the person contesting the decision resides or has its principal place of business. Any party having substantial interest in this order may apply for review of the decision by filing a petition for review in the appropriate U.S. Court of Appeals no later than 60 days after the order is issued in accordance with the provisions of 49 U.S.C. 46110. Any party seeking to stay implementation of the Record of Decision must file an application with the FAA prior to seeking judicial relief as provided in Rule 18(a) of the Federal Rules of Appellate Procedure.

Issued in Des Moines, WA, on September 3, 2020.

Maria A. Aviles,

Acting Group Manager, Operations Support Group, Western Service Center.

[FR Doc. 2020–19962 Filed 9–9–20; 8:45 am]

BILLING CODE 4910–13–P

[1] The FEA and the MDA/DAF FONSI are posted on MDA's website at *https://www.mda.mil/system/lrdr/.*

DEPARTMENT OF TRANSPORTATION

Federal Motor Carrier Safety Administration

[Docket No. FMCSA–2020–0124]

Qualification of Drivers; Exemption Applications; Implantable Cardioverter Defibrillator (ICD)

AGENCY: Federal Motor Carrier Safety Administration (FMCSA), Transportation (DOT).

ACTION: Notice of denial.

SUMMARY: FMCSA announces its decision to deny the application from one individual treated with an Implantable Cardioverter Defibrillator (ICD) who requested an exemption from the Federal Motor Carrier Safety Regulations (FMCSRs) prohibiting operation of a commercial motor vehicle (CMV) in interstate commerce by persons with a current clinical diagnosis of myocardial infarction, angina pectoris, coronary insufficiency, thrombosis, or any other cardiovascular disease of a variety known to be accompanied by syncope (transient loss of consciousness), dyspnea (shortness of breath), collapse, or congestive heart failure.

FOR FURTHER INFORMATION CONTACT: Ms. Christine A. Hydock, Chief, Medical Programs Division, (202) 366–4001, *fmcsamedical@dot.gov,* FMCSA, Department of Transportation, 1200 New Jersey Avenue SE, Room W64–224, Washington, DC 20590–0001. Office hours are from 8:30 a.m. to 5 p.m., ET, Monday through Friday, except Federal holidays. If you have questions regarding viewing materials in the docket, contact Docket Operations, (202) 366–9826.

SUPPLEMENTARY INFORMATION:

I. Public Participation

A. Viewing Documents and Comments

To view comments, as well as any documents mentioned in this notice as being available in the docket, go to *http://www.regulations.gov/docket?D=FMCSA-2020-0124* and choose the document to review. If you do not have access to the internet, you may view the docket online by visiting the Docket Operations in Room W12–

140 on the ground floor of the DOT West Building, 1200 New Jersey Avenue SE, Washington, DC 20590, between 9 a.m. and 5 p.m., ET, Monday through Friday, except Federal holidays. To be sure someone is there to help you, please call (202) 366–9317 or (202) 366–9826 before visiting Docket Operations.

B. Privacy Act

In accordance with 5 U.S.C. 553(c), DOT solicits comments from the public to better inform its rulemaking process. DOT posts these comments, without edit, including any personal information the commenter provides, to *www.regulations.gov,* as described in the system of records notice (DOT/ALL–14 FDMS), which can be reviewed at *www.dot.gov/privacy.*

II. Background

On May 19, 2020, FMCSA published a **Federal Register** notice (85 FR 3006) announcing receipt of an application from one individual treated with an ICD and requested comments from the public. This individual requested an exemption from 49 CFR 391.41(b)(4) which prohibits operation of a CMV in interstate commerce by persons with a current clinical diagnosis of myocardial infarction, angina pectoris, coronary insufficiency, thrombosis, or any other cardiovascular disease of a variety known to be accompanied by syncope, dyspnea, collapse, or congestive heart failure. The public comment period closed on June 18, 2020, and one comment was received.

FMCSA has evaluated the eligibility of the applicant and concluded that granting the exemption request would not provide a level of safety that would be equivalent to, or greater than, the level of safety that would be obtained by complying with § 391.41(b)(4). A summary of the applicant's medical history related to his ICD exemption request was discussed in the May 19, 2020, **Federal Register** notice and will not be repeated here.

The Agency's decision regarding this exemption application is based on information from the Cardiovascular Medical Advisory Criteria, an April 2007, evidence report titled ''Cardiovascular Disease and Commercial Motor Vehicle Driver Safety,'' [1] and a December 2014, focused research report titled ''Implantable Cardioverter Defibrillators and the Impact of a Shock in a Patient When Deployed.'' Copies of these reports are included in the docket.

FMCSA has published advisory criteria to assist medical examiners in determining whether drivers with certain medical conditions are qualified to operate a CMV in interstate commerce.[2] The advisory criteria for § 391.41(b)(4) indicates that coronary artery bypass surgery and pacemaker implantation are remedial procedures and thus, not medically disqualifying. Implantable cardioverter defibrillators are disqualifying due to risk of syncope.

III. Discussion of Comments

FMCSA received one comment which was out of scope for this proceeding.

IV. Basis for Exemption Determination

Under 49 U.S.C. 31136(e) and 31315(b), FMCSA may grant an exemption from the FMCSRs for no longer than a 5-year period if it finds such exemption would likely achieve a level of safety that is equivalent to, or greater than, the level that would be achieved absent such exemption.

The Agency's decision regarding exemption applications is based on an individualized assessment of each applicant's medical information, available medical and scientific data concerning ICDs, and any relevant public comments received.

In the case of persons with ICDs, the underlying condition for which the ICD was implanted places the individual at high risk for syncope or other unpredictable events known to result in gradual or sudden incapacitation. ICDs may discharge, which could result in loss of ability to safely control a CMV. The December 2014 focused research report discussed earlier upholds the findings of the April 2007 report and indicates that the available scientific data on persons with ICDs and CMV driving does not support that persons with ICDs who operate CMVs are able to meet an equal or greater level of safety.

V. Conclusion

The Agency has determined that the available medical and scientific literature and research provides insufficient data to enable the Agency to conclude that granting tan exemption would achieve a level of safety equivalent to, or greater than, the level of safety maintained without the exemption. Therefore, the following applicant has been denied an exemption from the physical qualification standards in § 391.41(b)(4):

Kenneth Randolph (FL)

The applicant has, prior to this notice, received a letter of final disposition regarding his exemption request. The decision letter fully outlined the basis for the denial and constitutes final action by the Agency. The notice published today summarizes the Agency's recent denials as required under 49 U.S.C. 31315(b)(4).

Larry W. Minor,

Associate Administrator for Policy.

[FR Doc. 2020–19952 Filed 9–9–20; 8:45 am]

BILLING CODE 4910–EX–P

[1] The reports are available on the internet at *https://rosap.ntl.bts.gov/view/dot/16462; https://rosap.ntl.bts.gov/view/dot/21199.*

[2] These criteria may be found in 49 CFR part 391, APPENDIX A TO PART 391—MEDICAL ADVISORY CRITERIA, section D. *Cardiovascular: § 391.41(b)(4),* paragraph 4, which is available on the internet at *https://www.gpo.gov/fdsys/pkg/CFR-2015-title49-vol5/pdf/CFR-2015-title49-vol5-part391-appA.pdf.*

DEPARTMENT OF TRANSPORTATION

Federal Motor Carrier Safety Administration

[Docket No. FMCSA–2018–0346]

Proposed Pilot Program To Allow Persons Ages 18, 19, and 20 To Operate Commercial Motor Vehicles in Interstate Commerce

AGENCY: Federal Motor Carrier Safety Administration (FMCSA), Transportation (DOT).

ACTION: Notice of proposed pilot program; request for comments.

SUMMARY: On May 15, 2019, FMCSA published a **Federal Register** notice requesting public comments on a possible new pilot program to allow drivers aged 18, 19, and 20 to operate commercial motor vehicles in interstate commerce. The May 2019 notice asked specific questions regarding training; qualifications; driving limitations; operational and participation requirements; insurance; research and data; and vehicle safety systems that should be considered in developing a second pilot program for younger drivers. This notice addresses the comments received and proposes a pilot program to allow 18-, 19-, and 20-year-old drivers to operate commercial motor vehicles in interstate commerce.

DATES: Comments must be received on or before November 9, 2020.

ADDRESSES: You may submit comments on this notice identified by docket number FMCSA–2018–0346 using any one of the following methods:

- *Federal eRulemaking Portal: www.regulations.gov.* Follow the online instructions for submitting comments.
- *Mail:* Docket Operations, U.S. Department of Transportation, 1200 New Jersey Avenue SE, West Building,

Ground Floor, Room W12–140, Washington, DC 20590–0001.

• *Hand Delivery or Courier:* West Building, Ground Floor, Room W12–140, 1200 New Jersey Avenue SE, between 9:00 a.m. and 5:00 p.m., Monday through Friday, except Federal holidays.

• *Fax:* 1–202–493–2251.

Each submission must include the Agency name and the docket number for this notice. Note that DOT posts all comments received without change to *www.regulations.gov,* including any personal information included in a comment. Please see the Privacy Act heading below.

Privacy Act: DOT solicits comments from the public to better inform its rulemaking and pilot program process. DOT posts these comments, without edit, including any personal information the commenter provides, to *www.regulations.gov,* as described in the system of records notice (DOT/ALL–14 FDMS), which can be reviewed at *www.dot.gov/privacy.*

FOR FURTHER INFORMATION CONTACT: Ms. Nikki McDavid, Commercial Driver's License Division, Federal Motor Carrier Safety Administration, 1200 New Jersey Avenue SE, Washington, DC 20590–0001, *nikki.mcdavid@dot.gov,* (202) 366–0831. If you have questions about viewing or submitting material to the docket, call DOT Docket Operations, (202) 366–9826.

SUPPLEMENTARY INFORMATION:

I. Public Participation and Request for Comments

FMCSA encourages you to participate by submitting comments and related materials. In this notice, FMCSA requests certain information, but comments are not limited to responses to those requests.

A. Submitting Comments

If you submit a comment, please include the docket number for this notice (FMCSA–2018–0346), indicate the specific section of this document to which the comment applies, and provide a reason for each suggestion or recommendation. You may submit your comments and material online, by fax, mail, or hand delivery, but please use only one of these means. FMCSA recommends that you include your name and a mailing address, an email address, or a phone number in the body of your document so the Agency can contact you if it has questions regarding your submission.

To submit your comment online, go to *www.regulations.gov,* put the docket number, ''FMCSA–2018–0346'' in the ''Keyword'' box, and click ''Search.'' When the new screen appears, click on the ''Comment Now!'' button and type your comment into the text box in the following screen. Choose whether you are submitting your comment as an individual or on behalf of a third party and then submit.

If you submit your comments by mail or hand delivery, submit them in an unbound format, no larger than 8½ by 11 inches, suitable for copying and electronic filing. If you submit comments by mail and would like to know that they reached the facility, please enclose a stamped, self-addressed postcard or envelope. FMCSA will consider all comments and material received during the comment period.

Confidential Business Information: Confidential Business Information (CBI) is commercial or financial information that is both customarily and actually treated as private by its owner. Under the Freedom of Information Act (5 U.S.C. 552), CBI is exempt from public disclosure. If your comments responsive to this notice contain commercial or financial information that is customarily treated as private, that you actually treat as private, and that is relevant or responsive to this notice, it is important that you clearly designate the submitted comments as CBI. FMCSA will treat such marked submissions as confidential under the Freedom of Information Act, and they will not be placed in the public docket for this rulemaking. Please mark each page of your submission that constitutes CBI as ''PROPIN'' to indicate it contains proprietary information. Submissions containing CBI should be sent to Mr. Brian Dahlin, Chief, Regulatory Analysis Division, FMCSA, 1200 New Jersey Avenue SE, Washington, DC 20590. Any comments FMCSA receives that are not specifically designated as CBI will be placed in the public docket for this rulemaking.

FMCSA will consider all comments and material received during the comment period and may make changes based on your comments.

B. Viewing Comments and Documents

To view comments, as well as documents mentioned in this notice as being available in the docket, go to *www.regulations.gov* and insert the docket number, ''FMCSA–2018–0346'' in the ''Keyword'' box and click ''Search.'' Next, click the ''Open Docket Folder'' button and choose the document listed to review. If you do not have access to the internet, you may view the docket online by visiting Docket Operations in Room W12–140 on the ground floor of the DOT West Building, 1200 New Jersey Avenue SE, Washington, DC 20590, between 9:00 a.m. and 5:00 p.m., Monday through Friday, except Federal holidays.

II. Legal Basis

The Secretary of Transportation has authority under 49 U.S.C. 31315(c) to conduct pilot programs and to allow one or more exemptions for the testing of innovative alternatives to certain Federal Motor Carrier Safety Regulations (FMCSRs) (§ 31315(c)(1)). The regulatory standards for pilot programs are codified at 49 CFR part 381, subparts D and E.

FMCSA must publish in the **Federal Register** a detailed description of each pilot program, including the exemptions being considered, and provide notice and an opportunity for public comment before the effective date of the program. The Agency is required to ensure that the safety measures in the pilot programs are designed to achieve a level of safety that is equivalent to, or greater than, the level of safety that would be achieved through compliance with the safety regulations. The maximum duration of pilot programs is 3 years from the starting date.

In the May 9, 2011, final rule on ''Commercial Driver's License Testing and Commercial Learner's Permit Standards'' (76 FR 26854), the Agency set a minimum age of 18 for an individual to obtain a commercial learner's permit (CLP) prior to obtaining a commercial driver's license (CDL) (49 CFR 383.25(a)(4)).

Drivers of commercial motor vehicles (CMVs), as defined in 49 CFR 383.5 and 390.5T, engaged in interstate commerce, must be at least 21 years of age (§ 391.11(b)(1)). An 18-year-old CLP or CDL holder may drive in intrastate commerce only.

The proposed pilot program would provide participating drivers with relief from sections of 49 CFR parts 383 and 391 concerning minimum age requirements. In addition, this pilot program would provide relief from the effect of the intrastate only (or ''K'') restriction that appears on a CDL at § 383.153(a)(10)(vii) and an exemption from the requirement in § 391.11(b)(1) that a CMV driver operating in interstate commerce be at least 21 years of age.

At the conclusion of each pilot program, FMCSA must report to Congress its findings, conclusions, and recommendations, including suggested amendments to laws and regulations, to include lowering the minimum driving age of interstate drivers, that would enhance motor carrier, CMV, and driver safety, and improve compliance with the FMCSRs.

III. Background

As documented in the May 15, 2019, **Federal Register** notice (84 FR 21895), changing the driving age has been studied by various organizations and previously proposed by the Federal Highway Administration, FMCSA's predecessor agency. FMCSA received specific direction to conduct a limited pilot program in section 5404 of the Fixing America's Surface Transportation Act (FAST Act) (Pub. L. 114–94, 129 Stat. 1312, 1549, Dec. 4, 2015).

Military Under-21 Pilot Program

On August 22, 2016, FMCSA proposed a pilot program to meet the requirements of section 5404 of the FAST Act and allow a limited number of individuals ages 18, 19, and 20 to operate CMVs in interstate commerce, if they received specified heavy-vehicle driver training while in military service and were hired by a participating motor carrier (81 FR 56745). In addition, the Agency asked specific questions and requested comments on the proposed pilot program. During this pilot program, the safety records of these younger drivers (the study group) would be compared to the records of a control group of comparable size, comprised of drivers who are between 21 and 24 years old and who have comparable training and experience in driving vehicles requiring a CDL. The comparison of the two groups' performance would help to determine whether the age difference was a critical safety factor.

In response to comments received on the August 22, 2016, proposal, FMCSA published a **Federal Register** notice on July 6, 2018, titled, ''Pilot Program to Allow Persons Between the Ages of 18 and 21 With Military Driving Experience to Operate Commercial Motor Vehicles in Interstate Commerce'' (83 FR 31633). This pilot program is currently underway, and its results will be reported not later than 1 year after the pilot program concludes.

Entry Level Driver Training

On December 8, 2016, FMCSA published a final rule titled ''Minimum Training Requirements for Entry-Level Commercial Motor Vehicle Operators'' (81 FR 88732). This rule was required by section 32304 of the Moving Ahead for Progress in the 21st Century Act, Public Law 112–141, see 49 U.S.C. 31305(c), and was the result of a negotiated rulemaking. The rule on entry-level driver training (ELDT) established minimum training standards for certain individuals applying for their CDL. CDL applicants subject to the rule must complete a prescribed program of instruction presented by an entity listed on FMCSA's Training Provider Registry, prior to taking the State-administered CDL skills test, or, for the Hazardous Materials endorsement, prior to taking the knowledge test. The final rule outlined the topics that must be covered during classroom and behind-the-wheel training; however, it did not require a minimum number of hours for either classroom or behind-the-wheel training.

On February 4, 2020, FMCSA published an interim final rule titled ''Extension of Compliance Date for Entry-Level Driver Training'' (84 FR 6088). The rule amended the compliance date from February 7, 2020, to February 7, 2022; however, it did not change the minimum training standards for certain individuals applying for their CDL.

Recent Legislative Proposals

On February 27, 2019, companion bills were introduced in the U.S. House of Representatives and the U.S. Senate called the ''Developing Responsible Individuals for a Vibrant Economy Act'' (DRIVE-Safe Act) (H.R. 1374), which proposed to lower the age requirement for interstate drivers to 18, as long as drivers under the age of 21 participated in an apprenticeship program. The apprenticeship would include separate 120-hour and 280-hour probationary periods, during which younger drivers would operate CMVs under the supervision of an experienced driver and must achieve specific performance benchmarks before advancing. Under the proposal, study group participants would also drive vehicles equipped with active-braking collision mitigation systems, forward-facing video event capture, and speed limiters set to 65 miles per hour. To date, the DRIVE-Safe Act has not been enacted.

IV. Discussion of Comments and Responses on the Notice of Proposed Pilot Program

In the May 15, 2019 **Federal Register** notice, FMCSA requested comments on the training and experience, operational requirements, participation requirements, technology requirements, insurance requirements, and research and data that FMCSA should consider in developing options or approaches for a second pilot program for younger drivers.

FMCSA received 1,118 comments to the docket; 504 commenters favored the proposal, while 486 opposed it. Other commenters offered conditional support, provided responses to the questions posed in the notice, or offered other suggestions. More than 1,000 individuals and 95 organizations commented. FMCSA received more than 750 unique comments, while the remaining comments were form letters (four types) in support of the pilot program or urging FMCSA to initiate a pilot program focused on short-haul drivers operating within a certain air-mile radius or in accordance with the proposed DRIVE-Safe Act.

The organizations that favored the pilot program included the Agricultural Retailers Association, American Bakers Association, Arkansas State Highway Commission, American Trucking Associations (ATA), Commercial Vehicle Training Association, DriverReach, Hudson Insurance Group, Intermodal Association of North America, International Association of Movers, International Foodservice Distributors Association, International Franchise Association, National Association of Publicly Funded Truck Driving Schools, National Interstate Insurance, National Propane Gas Association, National Ready Mixed Concrete Association, National Retail Federation (NRF), National Tank Truck Carriers, Towing and Recovery Association of America, and Truckload Carriers Association (TCA). In addition, numerous private citizens, motor carriers, training schools, State trucking associations, logistics companies, risk assessment companies, information technology companies, and other professional trade associations offered full or conditional support for the initiation of a younger driver pilot program.

Commenters including the American Association of Motor Vehicle Administrators (AAMVA), Commercial Vehicle Safety Alliance, Greyhound Bus Company, Inc., International Brotherhood of Teamsters, National Safety Council, Oregon Department of Transportation, United Motorcoach Association (UMA), and several motor carriers, private citizens, and other professional trade associations asked for clarification, provided data, and offered recommendations.

Those opposing the initiation of a younger driver pilot program included Advocates for Highway and Auto Safety (Advocates), Citizens for Reliable and Safe Highways, Governors Highway Safety Association, the Insurance Institute of Highway Safety (IIHS), the Owner-Operator Independent Drivers Association, Parents Against Tired Truckers, the Trucking Alliance, and several private citizens, motor carriers, and other professional trade associations. These opponents focused on safety, noting that truck and bus crashes, injuries, and fatalities continue

to rise, and that drivers 18 to 20 years old are overrepresented in crashes.

In addition, opponents also mentioned that the Agency has not analyzed data from the States that could provide information on the safety records of 18- to 20-year-old drivers who currently operate in intrastate commerce. Some argued that the Agency should complete the Under-21 Military CDL driver pilot program and analyze that data before initiating this pilot program.

Training and Experience

The 2019 **Federal Register** notice asked several questions related to the training and experience that a younger driver should be required to have to participate. Several commenters, including Advocates and UMA, believe that the drivers should have extensive experience operating a CMV to ensure public safety. The length of experience suggested by AAMVA, NRF, and UMA, for example, ranged from 1 to 2 years, while others, such as ATA, DriverReach, and TCA, did not believe any experience was necessary since the drivers would be subject to the minimum training requirements of the ELDT rule.

Some commenters believe that drivers aged 18 to 20 should be required to be supervised by a qualified trainer physically present at all times, or for a limited period (*e.g.,* for 6 months), while operating a CMV on public roads. As for training, commenters cited the training required by the proposed DRIVE-Safe Act, the CLP standards in 49 CFR part 383, and the ELDT rule.

Operational Requirements

The majority of commenters agreed that younger drivers should drive fewer hours than are currently permitted in the regulations. However, ATA and TCA believe that no limitations should be placed on younger drivers since they currently operate in intrastate commerce without any time or distance restrictions. In addition, ATA cited the FMCSA-sponsored Large Truck Crash Causation study which found that only 28 percent of large truck crashes occurred between 6:00 p.m. and 6:00 a.m. There was no consensus among commenters on whether to prohibit drivers from transporting hazardous materials, passengers, and/or operating tank trucks or special configuration vehicles.

Participation Requirements

The 2019 **Federal Register** notice asked what requirements motor carriers and drivers should be required to meet to participate in a younger driver pilot program. The majority of commenters believed the qualification standards established for FMCSA's Under-21 Military CDL Pilot Program were sufficient, while others believed the previously proposed DRIVE-Safe Act should be the minimum requirements for participation in a younger driver pilot program.

Technology Requirements

The 2019 notice asked what safety equipment or on-board recording systems should be required, mentioning automatic manual or automatic transmissions; active-braking collision mitigation systems; forward-facing video event capture; and speed limiters set to 65 miles per hour.

All commenters who responded to these questions supported the use of safety technology on vehicles operated by younger drivers. Some commenters proposed additional requirements, including adaptive cruise control, artificial intelligence, automatic emergency braking, Global Positioning Systems, lane centering, lane departure warning systems, and on-board rear-facing video event recorders.

Insurance

FMCSA asked for information on the ability of motor carriers to secure insurance for 18- to 20-year-old drivers. ATA felt that there would be no insurance problems, noting that trucking companies must currently obtain insurance for drivers under the age of 21 who operate in intrastate commerce. ATA said its membership includes 19 insurance companies and that they have expressed a willingness to work with motor carriers to offer insurance coverage for 18- to 20-year-old interstate drivers. The Hudson Insurance Group responded to this question and noted that training, retraining, and driver development are more critical than a driver's age and experience.

Of the insurance companies that provided comments to the docket, Hudson Insurance Group and National Interstate Insurance expressed their willingness to insure companies that are approved to participate in a younger driver pilot program. Other commenters recognized that self-insured motor carriers would be willing and able to participate in a younger driver pilot program.

Research and Data

The 2019 **Federal Register** requested research and data to evaluate the safety performance of drivers under 21 years of age. Specifically, FMCSA asked if data on traffic violations, crashes, and inspection violations were adequate to allow a comparison of the safety records of younger and older drivers; and what research the Agency should consider to assess the safety impacts of younger interstate CMV drivers.

Regarding the data available on the safety performance of 18- to 20-year-old drivers, commenters to this rule offered several suggestions. Advocates, ATA, IIHS, and TCA provided several examples of available data. As sources of safety performance data for 18- to 20-year-old drivers, commenters cited the Fatality Analysis Reporting System (FARS); the Trucks Involved in Fatal Accidents data; several studies, including the Governors Highway Safety Association study on teen driving; the National Transportation Safety Board's (NTSB) 2019–2020 Most Wanted List of safety changes; State intrastate data; the Agency's Under-21 Military CDL Pilot Program; and other data systems. Further, ATA presented comparison data from 18- to 20-year-old intrastate drivers in several States and data from drivers ages 21 years or older.

The data and research that commenters cited provided contradictory information on the safety of 18- to 20-year-old drivers.

ATA cited NHTSA's annual report titled ''Traffic Safety Facts: A Compilation of Motor Vehicle Crash Data.'' According to the report, in the 6 years studied (2012–2017), male drivers in the 16 to 20 age range had a lower involvement rate in fatal crashes than male drivers in the 21 to 24 age range. For example, during 2017, the male driver involvement rate in fatal crashes per 100,000 licensed drivers was 49.02 for drivers aged 16 to 20, and 50.32 for drivers aged 21 to 24. In addition, the intrastate data from 13 States shows that in 12 of the 13 States, 18- to 20-year-old CDL holders had crash rates that were on the whole lower than, or at worst, functionally equivalent to, that of their 21- to 24-year-old counterparts.

The IIHS analyzed the 2017 FARS data for drivers aged 18 and 19. The data shows that these drivers are 2.3 times more likely than drivers aged 20 and older to be in a fatal crash and nearly 3.5 times more likely to be involved in any police-reported crash. In addition, the IIHS cited the Governors Highway Safety Association study titled, ''Mission Not Accomplished: Teen Safe Driving, the Next Chapter.'' The study indicated that 19-year-olds accounted for the greatest number of teen drivers killed during the study period, followed by 20- and 18-year-olds.

Without recreating the report or analysis, FMCSA believes the

differences between the NHTSA Report and IIHS' analysis can be attributed to the different age groups studied and the fact that the NHTSA Report took into account data over a 6 year period, whereas IIHS analyzed 1 year of FARS data.

Commenters generally agreed that traffic violations, crashes, and inspection violations were adequate standards with which to compare the safety records of drivers, but cautioned against using indicators of violations, such as parking tickets, that are not indicative of unsafe driving behavior. Several commenters believe that FMCSA must conduct this pilot program to collect the needed data to determine the safety impacts of younger drivers operating in interstate commerce.

V. Pilot Program Proposal

Using the input from commenters to the 2019 **Federal Register** notice, FMCSA proposes the following structure for a new pilot program for younger drivers. The Agency seeks feedback on the details of this specific proposal.

Participant Age and Experience for Study Group Drivers

FMCSA proposes to allow drivers to participate in a younger driver pilot program if they fall within one of the following categories.

Category One: FMCSA proposes to allow 18- to 20-year-old CDL holders to operate CMVs in interstate commerce while taking part in a 120-hour probationary period and a subsequent 280-hour probationary period under an apprenticeship program established by an employer, as introduced in the DRIVE-Safe Act. The 120-hour probationary period would include 120 hours of on-duty time, with at least 80 hours of driving time in a CMV. In order to complete the 120-hour probationary period, the employer must make sure the younger driver is competent in each of the following areas: Interstate, city traffic, rural 2-lane, and evening driving; safety awareness; speed and space management; lane control; mirror scanning; right and left turns; and logging and complying with rules relating to hours of service. The 280-hour probationary period would include 280 hours of on-duty time, with at least 160 hours of driving time in a CMV. In order to complete the 280-hour probationary period, an employer must ensure that the younger driver is competent in each of the following areas: Backing and maneuvering in close quarters; pre-trip inspections; fueling procedures; weighing loads, weight distribution, and sliding tandems; coupling and uncoupling procedures; and trip planning, truck routes, map reading, navigation, and permits. Driver training and apprenticeship programs have been proven to provide valuable driving experience; to reduce recklessness; to help prepare the driver for real-life driving situations that he or she may experience on the road; and identify and correct poor driving behaviors. Through this probationary program, the Agency believes these drivers will obtain the necessary experience skills to operate safety in interstate commerce. Forty-eight States and the District of Columbia already allow 18- to 20-year-old CDL holders to operate CMVs in intrastate commerce.

Category Two: FMCSA proposes to permit 19- and 20-year-old commercial drivers who have operated CMVs in intrastate commerce for a minimum of 1 year and 25,000 miles to participate in the younger driver CDL pilot program. The Agency believes these drivers have the requisite experience to operate safely, assuming they meet certain safety performance standards; and therefore, would not be required to complete any probationary periods. Forty-nine States and the District of Columbia already allow 19- and 20-year-old CDL holders to operate CMVs in intrastate commerce.

To have a statistically valid sample, approximately 200 drivers aged 18, 19 and 20 are needed. When these individuals reach the age of 21, they would no longer participate in the pilot program and would be have to be replaced by additional 18-, 19- and 20-year-old drivers by the motor carriers. FMCSA may continue to track the safety records of study group drivers who continue to drive for participating motor carriers when they are 21 or older.

Driving Limitations for Study Group Drivers

FMCSA proposes to limit the types of vehicles a driver in the pilot program may operate. Consistent with the limitations FMCSA established in the Under-21 Military CDL Pilot Program, study group drivers would not be allowed to operate vehicles hauling passengers or hazardous materials or special configuration vehicles (*e.g.,* doubles, triples, cargo tanks).

Training and Experience Requirements for Study Group Drivers

In keeping with the Agency's ELDT final rule, FMCSA proposes to require study group drivers to have taken CDL training that meets the ELDT rule standards before obtaining their CDL. This will ensure that drivers admitted to the younger driver CDL pilot program have minimum training and sufficient experience necessary to operate safely on our Nation's highways.

Other Study Group Driver Requirements

To participate in the pilot program, FMCSA proposes that the study group driver be required to complete an application. In addition, the study group driver must have no disqualifications, suspensions, or license revocations within the past 2 years and not be under any out-of-service (OOS) order. To qualify as a study group participant, the driver must not have:

1. Had more than one license;
2. Had his or her intrastate CDL suspended, revoked, cancelled, or disqualified for a violation related to 49 CFR 383.51 in the home State of record or any State;
3. Had any conviction for a violation of State or local law relating to motor vehicle traffic control (other than a parking violation) arising in connection with any traffic crash and have no record of a crash in which he or she was at fault;
4. Been convicted of any of the following violations while operating a motor vehicle; or
   - Been under the influence of alcohol as prescribed by State law;
   - Been under the influence of a controlled substance;
   - Had an alcohol concentration of 0.04 or greater while operating a CMV;
   - Refused to take an alcohol test as required by a State under its implied consent laws or regulations as defined in 49 CFR 383.72;
   - Left the scene of a crash;
   - Used the vehicle to commit a felony;
   - Driven a CMV while his or her intrastate CDL or other license was revoked, suspended, or cancelled or while he or she was disqualified from operating a CMV; or
   - Caused a fatality through the negligent operation of a CMV (including motor vehicle manslaughter, homicide by motor vehicle, or negligent homicide).
5. Had more than one conviction for any of the violations described below in any type of motor vehicle:
   - Driving recklessly, as defined by State or local law or regulation (including offenses of driving a motor vehicle in willful or wanton disregard for the safety of persons or property);
   - Driving a CMV without obtaining a CDL;
   - Violating a State or local law or ordinance on motor vehicle traffic control prohibiting texting while driving; or

○ Violating a State or local law or ordinance on motor vehicle traffic control restricting or prohibiting the use of a hand held mobile telephone while driving.

To stay in the pilot program, the younger drivers would be required to agree to the release of specific information to FMCSA for purposes of the pilot program; meet all FMCSR requirements (except age) for operating a CMV in interstate commerce; operate primarily in interstate commerce; and, if selected; maintain a good driving record (*e.g.,* free of any § 383.51 violations). A driver may be removed from the pilot program if he or she is disqualified for a major offense, serious traffic violation, railroad-highway grade crossing, or violation of an OOS order, as outlined in § 383.51 of the FMCSRs.

Vehicle Safety Technology for Study Group Drivers

Vehicle safety technology continues to increase and FMCSA recognizes the value of these systems. These tools can help prevent, or significantly reduce the number and severity of, crashes on our Nation's highways. FMCSA is proposing to require the following vehicle safety technologies on the CMVs operated by the study group drivers: Active-braking collision mitigation systems; forward-facing video event recorders; and automatic or automatic-manual transmissions; and speed limiters set to 65 miles per hour. FMCSA believes that requiring these technologies on the CMVs operated by younger drivers will assist in preventing crashes. As an added benefit, FMCSA will be able to analyze the data received from these technologies to determine if one safety feature is more beneficial to safety.

Although not required, FMCSA would also prioritize approval of those motor carriers that equip their vehicles with additional technologies, such as various collision avoidance systems, lane centering, etc.

Control Group Drivers

A control group of older drivers is needed to form a baseline of comparison for the safety records of the younger study group drivers. The control group participants would be between 21 and 24 years of age. These control group drivers would work for the participating carriers.

Motor Carrier Qualification Requirements

To qualify for participation, a motor carrier would have to meet the following minimum standards, which match the minimum standards of the Under-21 Military CDL Pilot:

1. Have proper operating authority registration, if required, and USDOT number;
2. Have evidence of the minimum levels of financial responsibility;
3. Not be a high or moderate risk motor carrier as defined in the Agency's **Federal Register** notice titled, ''Notification of Changes to the Definition of a High Risk Motor Carrier and Associated Investigation'' published on March 7, 2016 (81 FR 11875);
4. Not have a conditional or unsatisfactory safety rating;
5. Not have any open enforcement actions based on an imminent hazard OOS order (49 CFR 386.72) or a suspension or revocation based on a pattern of safety violations (49 CFR part 385 Subpart K);
6. Not have a crash rate above the national average;
7. Not have a driver OOS rate above the national average; and
8. Not have a vehicle OOS rate above the national average.

In addition, unpaid civil penalties would be grounds to deny participation in the pilot program.

Throughout the pilot program, the motor carrier would be expected to maintain an excellent safety record. Motor carriers may be disqualified from the pilot program if the carrier:

1. Does not have proper operating authority registration, where required, and USDOT number;
2. Does not have the minimum levels of financial responsibility;
3. Is prioritized as a high risk;
4. Is prioritized as a moderate risk for 2 consecutive months;
5. Receives a conditional or unsatisfactory safety rating;
6. Is the subject of an open Federal enforcement action based on an imminent hazard OOS order (49 CFR 386.72) or a suspension or revocation based on a pattern of safety violations (49 CFR part 385 Subpart K). Enforcement actions resulting in civil penalties will be reviewed on a case-by-case basis;
7. Has a crash rate above the national average for 3 consecutive months;
8. Has a driver OOS rate above the national average for 3 consecutive months;
9. Has a vehicle OOS rate above the national average for 3 consecutive months; or
10. Fails to report monthly data as required.

FMCSA would reserve the right to remove a carrier from the program at its discretion if it is determined there is a safety risk.

Motor Carrier Application and Participation Requirements

Carriers would be required to complete an application for participation in the pilot program and submit monthly data on study group and/or control group driver activity (*e.g.,* vehicle miles traveled, duty hours, driving hours, off-duty time, or breaks), safety outcomes (*e.g.,* crashes, violations, and safety-critical events) and any additional supporting information (*e.g.,* onboard monitoring systems or investigative reports from previous crashes). In addition, carriers would be required to notify FMCSA within 24 hours of: (1) Any injury or fatal crash involving a participating study group pilot program driver; (2) a study group driver receiving an alcohol-related citation (*e.g.,* driving under the influence or driving while intoxicated); (3) a study group driver choosing to leave the pilot program; (4) a study group driver leaving the carrier; or (5) a study group driver failing a random or post-crash drug/alcohol test.

Carriers would be required to ensure drivers meet the requirements to participate in a younger driver pilot program by establishing an apprenticeship program that would mirror the requirements introduced in the proposed DRIVE-Safe Act for study group drivers in group one; ensuring study group drivers in group two meet the requisite experience; and verifying that study group drivers meet all other requirements to participate.

FMCSA would gather additional safety data for all study and control group drivers during the pilot program from the Motor Carrier Management Information System (MCMIS), such as crashes and driving and inspection violations.

FMCSA would prioritize approval of carriers to participate and continue based on these carriers' safety performance records over time, selecting only those with the highest or best relative performance.

Approved carriers would be publicly announced on the Agency's website to encourage potential study group drivers to apply for employment directly with the identified carriers. Approved carriers would be able to assist study group drivers (whom they sponsor) with completion of the application and participation agreement. When a carrier receives notification that a study group driver has been approved to operate in interstate commerce, the carrier would then submit a form and agreement for a control group driver. In this manner, the number of drivers in each group would be similar.

The length of time during which replacement study group drivers will be added will be determined by FMCSA based on the statistical and administrative needs of the pilot data collection plan.

FMCSA would adapt the applications, agreements, forms to be used by interested carriers and potential study and control group drivers, and plans it created for its Under 21 Military CDL Pilot Program for this younger driver pilot program.

In addition to the above requirements, FMCSA is proposing that each motor carrier accepted into the pilot program must agree to comply with all pilot program procedures and requirements, including completing required forms, obtaining driver consent, and attending information sessions.

Control Group Drivers

Details of each requirement for control group drivers summarized below would be published if the pilot program is approved. Control group drivers would be required to:

- Agree to participate;
- Possess a valid CDL;
- Be a driver for participating motor carrier;
- Have no disqualifications, suspensions, or license revocations within past 2 years; or be under any OOS order;
- Agree to release of specified information for the pilot program;
- Have experience comparable to study group drivers; and
- Be 21 to 24 years old at time of acceptance into the pilot.

VI. Data Collection Plan

The factors to be collected from each participating driver before and during the pilot program may include, but are not limited to: (1) Details of any past CMV driving experience and employment information to assess qualification for participation in the study and/or control groups; (2) crashes (to be specified); (3) any traffic citations or warnings received while driving a CMV; (4) any violations or warnings listed on a CMV inspection report when the participating driver was operating the vehicle; and (5) detailed 24-hour records of activity to include CMV hours-of-service logs or electronic records. Some of this information would be automatically reported to FMCSA; however, due to possibility of delays in reporting and inaccurate data in some instances, the participating carrier would be asked to collect the information from all participating drivers and report it to FMCSA in a designated format. Other information that may be needed, such as vehicle miles traveled, would also be collected through the participating carrier. Every effort would be made to minimize the burden on the carrier in collecting and reporting this data.

VII. Paperwork Reduction Act

The proposed pilot program would require participating motor carriers to collect, maintain, and report to FMCSA certain information about their employed/sponsored drivers who are participating in the pilot program. This would include identifying information and safety performance data for use in analyzing the drivers' safety history. The Agency would revise the forms developed for the Under-21 Military Driver pilot program to promote uniformity in the data collected by the pilot carriers.

The Paperwork Reduction Act of 1995 (44 U.S.C. 3501–3520) prohibits agencies from conducting information collection (IC) activities until they analyze the need for the collection of information and how the collected data would be managed. Agencies must also analyze whether technology could be used to reduce the burden imposed on those providing the data. The Agency must estimate the time burden required to respond to the IC requirements, such as the time required to complete a particular form. The Agency submits its IC analysis and burden estimate to the Office of Management and Budget (OMB) as a formal information collection request (ICR); the Agency cannot conduct the information collection until OMB approves the ICR. FMCSA asks for comment on the IC requirements of this proposal. The Agency's analysis of these comments would be used in devising the Agency's estimate of the IC burden of the pilot program. Comments can be submitted to the docket as outlined under **ADDRESSES** at the beginning of this notice. Specifically, the Agency asks for comment on: (1) How useful the information is and whether it can help FMCSA perform its functions better; (2) how the Agency can improve the quality of the information being collected; (3) the accuracy of FMCSA's estimate of the burden of this IC; and (4) how the Agency can minimize the burden of collection.

Because this is a proposed pilot program in which certain aspects—such as the content of forms and reports—have not been finalized, the Agency is not posting the possible IC burden data at this time. If the pilot program is to be implemented, this information would be posted at a later date and additional comments would be taken.

VIII. Monitoring and Oversight

FMCSA would review both monthly data submitted by approved motor carriers and its own databases including, but not limited to, MCMIS, Safety Measurement System, Commercial Driver's License Information System, the Licensing and Insurance system, and the Drug and Alcohol Clearinghouse. FMCSA reserves the right to remove any motor carrier or driver from the pilot program for reasons including, but not limited to, failing to meet any of the requirements of the program.

IX. Length of Program

FMCSA expects this program to run for 3 years but may conclude the program sooner if there is sufficient data to analyze the safety of covered drivers.

X. Request for Public Comments

The following questions identify input desired by FMCSA. Instructions for filing comments to the public docket are included earlier in this notice. Persons are encouraged to respond wherever possible by reference to the question number, but comments are not limited to replies to these questions:

1. Should FMCSA consider any additional safeguards to ensure that the pilot program provides an equivalent level of safety to the regulations without the age exemption?
2. Would carriers be able to obtain enough drivers to serve in the control group?
3. Would the vehicle technology requirements proposed for study group drivers limit participation by smaller companies?
4. Should FMCSA limit the distance that study group drivers should be allowed to operate (*e.g.,* 150 air-mile radius, 250 air-mile radius)?
5. Are the data collection efforts proposed so burdensome for carriers as to discourage their participation?
6. Should we limit participation to drivers who have not been involved in a preventable crash?

James A. Mullen,

Deputy Administrator.

[FR Doc. 2020–19977 Filed 9–9–20; 8:45 am]

BILLING CODE 4910–EX–P

DEPARTMENT OF THE TREASURY

Office of Foreign Assets Control

Notice of OFAC Sanctions Actions

AGENCY: Office of Foreign Assets Control, Treasury.

ACTION: Notice.

SUMMARY: The U.S. Department of the Treasury's Office of Foreign Assets Control (OFAC) is publishing the names of one or more persons that have been placed on OFAC's Specially Designated Nationals and Blocked Persons List based on OFAC's determination that one or more applicable legal criteria were satisfied. All property and interests in property subject to U.S. jurisdiction of these persons are blocked, and U.S. persons are generally prohibited from engaging in transactions with them.

DATES: See **SUPPLEMENTARY INFORMATION** section for applicable date(s).

FOR FURTHER INFORMATION CONTACT: OFAC: Associate Director for Global Targeting, tel.: 202–622–2420; Assistant Director for Sanctions Compliance & Evaluation, tel.: 202–622–2490; Assistant Director for Licensing, tel.: 202–622–2480.

SUPPLEMENTARY INFORMATION:

Electronic Availability

The Specially Designated Nationals and Blocked Persons List and additional information concerning OFAC sanctions programs are available on OFAC's website (*www.treas.gov/ofac*).

Notice of OFAC Actions

On July 28, 2020, OFAC determined that the property and interests in property subject to U.S. jurisdiction of the following persons are blocked under the relevant sanctions authorities listed below.

Individuals

1. AL–RAWI, 'Adnan Muhammad Amin (a.k.a. AL RAWI, Adnan Mahmood; a.k.a. ALRAWI, Adnan Mahmoud; a.k.a. AL–RAWI, Amin Muhammad; a.k.a. AMIN, 'Adnan Muhammad; a.k.a. RAWI, Adnan Mahmood; a.k.a. ''ALDEEN, Mohammed Amad Az''; a.k.a. ''EMAD, Mohammad''; a.k.a. ''EZALDEEN, Mohammed Emad''), Erbil, Iraq; Amman, Jordan; Sulaymaniyah, Iraq; Istanbul, Turkey; Adana, Turkey; Bazaz Abd, Syria; al-Rawah, Anbar, Iraq; DOB 07 Jan 1985; alt. DOB 28 Aug 1982; Gender Male; National ID No. 649474 (Iraq); Identification Number 00260818 (Iraq); alt. Identification Number 658032 (Jordan); alt. Identification Number 635464 (Jordan); alt. Identification Number 1251025 (Jordan); alt. Identification Number 1200701 (Jordan); alt. Identification Number 24906658031 (Jordan); alt. Identification Number 1465967 (Jordan); alt. Identification Number 1194396 (Jordan) (individual) [SDGT] (Linked To: ISLAMIC STATE OF IRAQ AND THE LEVANT).

Designated pursuant to section 1(a)(iii)(A) of Executive Order 13224 of September 23, 2001, ''Blocking Property and Prohibiting Transactions With Persons Who Commit, Threaten to Commit, or Support Terrorism,'' 66 FR 49079, as amended by Executive Order 13886 of September 9, 2019, ''Modernizing Sanctions To Combat Terrorism,'' 84 FR 48041 (E.O. 13224, as amended), for having acted or purported to act for or on behalf of, directly or indirectly, the ISLAMIC STATE OF IRAQ AND THE LEVANT, an entity whose property and interests in property are blocked pursuant to E.O. 13224, as amended.

2. HAMUD, Faruq, al Hawl, Syria; DOB 02 Feb 1990; Gender Male (individual) [SDGT] (Linked To: ISLAMIC STATE OF IRAQ AND THE LEVANT).

Designated pursuant to section 1(a)(iii)(C) of Executive Order 13224 for having materially assisted, sponsored, or provided financial, material, or technological support for, or goods or services to or in support of, the ISLAMIC STATE OF IRAQ AND THE LEVANT, an entity whose property and interests in property are blocked pursuant to E.O. 13224, as amended.

Dated: July 28, 2020.

Andrea M. Gacki,

Director, Office of Foreign Assets Control, U.S. Department of the Treasury.

[FR Doc. 2020–20028 Filed 9–9–20; 8:45 am]

BILLING CODE 4810–AL–P

DEPARTMENT OF THE TREASURY

Internal Revenue Service

Open Meeting of the Taxpayer Advocacy Panel's Notices and Correspondence Project Committee

AGENCY: Internal Revenue Service (IRS), Treasury.

ACTION: Notice of meeting.

SUMMARY: An open meeting of the Taxpayer Advocacy Panel's Notices and Correspondence Project Committee will be conducted. The Taxpayer Advocacy Panel is soliciting public comments, ideas, and suggestions on improving customer service at the Internal Revenue Service.

DATES: The meeting will be held Wednesday, October 14, 2020.

FOR FURTHER INFORMATION CONTACT: Robert Rosalia at 1–888–912–1227 or (718) 834–2203.

SUPPLEMENTARY INFORMATION: Notice is hereby given pursuant to Section 10(a)(2) of the Federal Advisory Committee Act, 5 U.S.C. App. (1988) that an open meeting of the Taxpayer Advocacy Panel's Notices and Correspondence Project Committee will be held Wednesday, October 14, 2020, at 1:00 p.m. Eastern Time. The public is invited to make oral comments or submit written statements for consideration. Due to limited time and structure of meeting, notification of intent to participate must be made with Robert Rosalia. For more information please contact Robert Rosalia at 1–888–912–1227 or (718) 834–2203, or write TAP Office, 2 Metrotech Center, 100 Myrtle Avenue, Brooklyn, NY 11201 or contact us at the website: *http://www.improveirs.org.* The agenda will include various IRS issues.

Dated: September 3, 2020.

Kevin Brown,

Acting Director, Taxpayer Advocacy Panel.

[FR Doc. 2020–19968 Filed 9–9–20; 8:45 am]

BILLING CODE 4830–01–P

DEPARTMENT OF THE TREASURY

Internal Revenue Service

Open Meeting of the Taxpayer Advocacy Panel's Toll-Free Phone Lines Project Committee

AGENCY: Internal Revenue Service (IRS), Treasury.

ACTION: Notice of meeting.

SUMMARY: An open meeting of the Taxpayer Advocacy Panel's Toll-Free Phone Lines Project Committee will be conducted. The Taxpayer Advocacy Panel is soliciting public comments, ideas, and suggestions on improving customer service at the Internal Revenue Service.

DATES: The meeting will be held Wednesday, October 14, 2020.

FOR FURTHER INFORMATION CONTACT: Rosalind Matherne at 1–888–912–1227 or 202–317–4115.

SUPPLEMENTARY INFORMATION: Notice is hereby given pursuant to Section 10(a)(2) of the Federal Advisory Committee Act, 5 U.S.C. App. (1988) that an open meeting of the Taxpayer Advocacy Panel Toll-Free Phone Lines Project Committee will be held Wednesday, October 14, 2020 at 11:00 a.m. Eastern Time. The public is invited to make oral comments or submit written statements for consideration. Due to limited time and structure of meeting, notification of intent to participate must be made with Rosalind Matherne. For more information please contact Rosalind Matherne at 1–888–912–1227 or 202–317–4115, or write TAP Office, 1111 Constitution Ave. NW, Room 1509, Washington, DC 20224 or contact us at the website: *http://www.improveirs.org.* The agenda will include various IRS issues.

Dated: September 3, 2020.

Kevin Brown,

Acting Director, Taxpayer Advocacy Panel.

[FR Doc. 2020–19967 Filed 9–9–20; 8:45 am]

BILLING CODE 4830–01–P

DEPARTMENT OF THE TREASURY

Internal Revenue Service

Open Meeting of the Taxpayer Advocacy Panel Taxpayer Assistance Center Improvements Project Committee

AGENCY: Internal Revenue Service (IRS), Treasury.

ACTION: Notice of meeting.

SUMMARY: An open meeting of the Taxpayer Advocacy Panel's Taxpayer Assistance Center Improvements Project Committee will be conducted. The Taxpayer Advocacy Panel is soliciting public comments, ideas, and suggestions on improving customer service at the Internal Revenue Service.

DATES: The meeting will be held Tuesday, October 13, 2020.

FOR FURTHER INFORMATION CONTACT: Matthew O'Sullivan at 1–888–912–1227 or (510) 907–5274.

SUPPLEMENTARY INFORMATION: Notice is hereby given pursuant to Section 10(a)(2) of the Federal Advisory Committee Act, 5 U.S.C. App. (1988) that an open meeting of the Taxpayer Advocacy Panel's Taxpayer Assistance Center Improvements Project Committee will be held Tuesday, October 13, 2020, at 1:00 p.m. Eastern Time. The public is invited to make oral comments or submit written statements for consideration. Due to limited time and structure of meeting, notification of intent to participate must be made with Matthew O'Sullivan. For more information please contact Matthew O'Sullivan at 1–888–912–1227 or (510) 907–5274, or write TAP Office, 1301 Clay Street, Oakland, CA 94612–5217 or contact us at the website: *http://www.improveirs.org.* The agenda will include various IRS issues.

Dated: September 3, 2020.

Kevin Brown,

Acting Director, Taxpayer Advocacy Panel.

[FR Doc. 2020–19969 Filed 9–9–20; 8:45 am]

BILLING CODE 4830–01–P

DEPARTMENT OF THE TREASURY

Internal Revenue Service

Open Meeting of the Taxpayer Advocacy Panel Taxpayer Communications Project Committee

AGENCY: Internal Revenue Service (IRS), Treasury.

ACTION: Notice of meeting.

SUMMARY: An open meeting of the Taxpayer Advocacy Panel's Taxpayer Communications Project Committee will be conducted. The Taxpayer Advocacy Panel is soliciting public comments, ideas, and suggestions on improving customer service at the Internal Revenue Service.

DATES: The meeting will be held Tuesday, October 13, 2020.

FOR FURTHER INFORMATION CONTACT: Cedric Jeans at 1–888–912–1227 or 901–707–3935.

SUPPLEMENTARY INFORMATION: Notice is hereby given pursuant to Section 10(a)(2) of the Federal Advisory Committee Act, 5 U.S.C. App. (1988) that a meeting of the Taxpayer Advocacy Panel Taxpayer Communications Project Committee will be held Tuesday, October 13, 2020, at 12:00 p.m. Eastern Time. The public is invited to make oral comments or submit written statements for consideration. Due to limited time and structure of meeting, notification of intent to participate must be made with Cedric Jeans. For more information please contact Cedric Jeans at 1–888–912–1227 or 901–707–3935, or write TAP Office, 5333 Getwell Road, Memphis, TN 38118 or contact us at the website: *http://www.improveirs.org.* The agenda will include various IRS issues.

Dated: September 3, 2020.

Kevin Brown,

Acting Director, Taxpayer Advocacy Panel.

[FR Doc. 2020–19970 Filed 9–9–20; 8:45 am]

BILLING CODE 4830–01–P

DEPARTMENT OF THE TREASURY

Internal Revenue Service

Proposed Collection; Comment Request for Form 15254

AGENCY: Internal Revenue Service (IRS), Treasury.

ACTION: Notice and request for comments.

SUMMARY: The Internal Revenue Service, as part of its continuing effort to reduce paperwork and respondent burden, invites the public and other Federal agencies to take this opportunity to comment on proposed and/or continuing information collections, as required by the Paperwork Reduction Act of 1995. Currently, the IRS is soliciting comments concerning Form 15058, Application for Security Summit Membership.

DATES: Written comments should be received on or before November 9, 2020 to be assured of consideration.

ADDRESSES: Direct all written comments to Kinna Brewington, Internal Revenue Service, Room 6526, 1111 Constitution Avenue NW, Washington, DC 20224.

FOR FURTHER INFORMATION CONTACT: Requests for additional information or copies of the form and instructions should be directed to LaNita Van Dyke at (202) 317–6009, at Internal Revenue Service, Room 6526, 1111 Constitution Avenue NW, Washington, DC 20224, or through the internet at *Lanita.VanDyke@irs.gov.*

SUPPLEMENTARY INFORMATION:

Title: Request for Section 754 Revocation.

OMB Number: 1545–XXXX.

Form Number: 15254.

Abstract: Section 754 election revocation requests have increased since technical terminations were repealed under TCJA for tax years beginning after December 31, 2017. LB&I, in collaboration with SBSE, developed a new form (Form 15254) with instructions for the partnership to use to submit the revocation request.

Form 15254—Request for Section 754 Revocation, the data is the same collected on the Form 1065 U.S. Return of Partnership Income and will be used to contact the partnership and make a determination regarding whether the Section 754 revocation request will be approved or denied.

Current Actions: This is a new form.

Type of Review: Approval of a new collection.

Affected Public: Business or other for-profit.

Estimated Number of Respondents: 50.

Estimated Time per Respondent: 5 minutes, 12 sec.

Estimated Total Annual Burden Hours: 256.

The following paragraph applies to all the collections of information covered by this notice:

An agency may not conduct or sponsor, and a person is not required to respond to, a collection of information unless the collection of information displays a valid OMB control number.

Books or records relating to a collection of information must be retained if their contents may become material in the administration of any internal revenue law. Generally, tax returns and tax return information are confidential, as required by 26 U.S.C. 6103.

Request for Comments: Comments submitted in response to this notice will be summarized and/or included in the request for OMB approval. All comments will become a matter of public record. Comments are invited on: (a) Whether the collection of information is necessary for the proper

performance of the functions of the agency, including whether the information shall have practical utility; (b) the accuracy of the agency's estimate of the burden of the collection of information; (c) ways to enhance the quality, utility, and clarity of the information to be collected; (d) ways to minimize the burden of the collection of information on respondents, including through the use of automated collection techniques or other forms of information technology; and (e) estimates of capital or start-up costs and costs of operation, maintenance, and purchase of services to provide information.

Approved: September 3, 2020.

Chakinna B. Clemons,

Supervisory Tax Analyst.

[FR Doc. 2020–19958 Filed 9–9–20; 8:45 am]

BILLING CODE 4830–01–P

DEPARTMENT OF THE TREASURY

Internal Revenue Service

Open Meeting of the Taxpayer Advocacy Panel's Tax Forms and Publications Project Committee

AGENCY: Internal Revenue Service (IRS), Treasury.

ACTION: Notice of meeting.

SUMMARY: An open meeting of the Taxpayer Advocacy Panel's Tax Forms and Publications Project Committee will be conducted. The Taxpayer Advocacy Panel is soliciting public comments, ideas, and suggestions on improving customer service at the Internal Revenue Service.

DATES: The meeting will be held Wednesday, October 14, 2020.

FOR FURTHER INFORMATION CONTACT: Fred Smith at 1–888–912–1227 or (202) 317–3087.

SUPPLEMENTARY INFORMATION: Notice is hereby given pursuant to Section 10(a)(2) of the Federal Advisory Committee Act, 5 U.S.C. App. (1988) that a meeting of the Taxpayer Advocacy Panel's Tax Forms and Publications Project Committee will be held Wednesday, October 14, 2020 at 12:00 p.m. Eastern Time. The public is invited to make oral comments or submit written statements for consideration. Due to limited time and structure of meeting, notification of intent to participate must be made with Fred Smith. For more information please contact Fred Smith at 1–888–912–1227 or (202) 317–3087, or write TAP Office, 1111 Constitution Ave. NW, Room 1509, Washington, DC 20224 or contact us at the website: *http://www.improveirs.org.*

Dated: September 3, 2020.

Kevin Brown,

Acting Director, Taxpayer Advocacy Panel.

[FR Doc. 2020–19966 Filed 9–9–20; 8:45 am]

BILLING CODE 4830–01–P

DEPARTMENT OF THE TREASURY

Internal Revenue Service

Proposed Collection; Comment Request for United States Gift (and Generation-Skipping Transfer) Tax Return

AGENCY: Internal Revenue Service (IRS), Treasury.

ACTION: Notice and request for comments.

SUMMARY: The Internal Revenue Service, as part of its continuing effort to reduce paperwork and respondent burden, invites the general public and other Federal agencies to take this opportunity to comment on continuing information collections, as required by the Paperwork Reduction Act of 1995. The IRS is soliciting comments concerning United States gift (and generation-skipping transfer) tax return.

DATES: Written comments should be received on or before November 9, 2020 to be assured of consideration.

ADDRESSES: Direct all written comments to Kinna Brewington, Internal Revenue Service, room 6526, 1111 Constitution Avenue NW, Washington, DC 20224.

FOR FURTHER INFORMATION CONTACT: Requests for additional information or copies of the form should be directed to Kerry Dennis, at (202) 317–5751 or Internal Revenue Service, Room 6526, 1111 Constitution Avenue NW, Washington, DC 20224, or through the internet, at *Kerry.Dennis@irs.gov.*

SUPPLEMENTARY INFORMATION:

Title: United States Gift (and Generation-Skipping Transfer) Tax Return.

OMB Number: 1545–0020.

Form Number: 709.

Abstract: Form 709 is used by individuals to report transfers subject to the gift and generation-skipping transfer taxes and to compute these taxes. The IRS uses the information to collect and enforce these taxes, to verify that the taxes are properly computed, and to compute the tax base for the estate tax.

Current Actions: There are no changes being made to the form at this time that would affect burden. However, the agency is updating the estimated number of respondents based on the most recent filing data, resulting in a decrease in respondents and overall annual burden hours.

Type of Review: Revision of a currently approved collection.

Affected Public: Business or other for-profit organizations.

Estimated Number of Respondents: 255,500.

Estimated Time per Response: 6 hours, 12 minutes.

Estimated Total Annual Burden Hours: 1,584,100.

The following paragraph applies to all the collections of information covered by this notice.

An agency may not conduct or sponsor, and a person is not required to respond to, a collection of information unless the collection of information displays a valid OMB control number. Books or records relating to a collection of information must be retained if their contents may become material in the administration of any internal revenue law. Generally, tax returns and tax return information are confidential, as required by 26 U.S.C. 6103.

Request for Comments: Comments submitted in response to this notice will be summarized and/or included in the request for OMB approval. All comments will become a matter of public record. Comments are invited on: (a) Whether the collection of information is necessary for the proper performance of the functions of the agency, including whether the information shall have practical utility; (b) the accuracy of the agency's estimate of the burden of the collection of information; (c) ways to enhance the quality, utility, and clarity of the information to be collected; (d) ways to minimize the burden of the collection of information on respondents, including through the use of automated collection techniques or other forms of information technology; and (e) estimates of capital or start-up costs and costs of operation, maintenance, and purchase of services to provide information.

Approved: September 3, 2020.

Chakinna B. Clemons,

Supervisory Tax Analyst.

[FR Doc. 2020–19930 Filed 9–9–20; 8:45 am]

BILLING CODE 4830–01–P

DEPARTMENT OF THE TREASURY

Internal Revenue Service

Open Meeting of the Taxpayer Advocacy Panel Joint Committee

AGENCY: Internal Revenue Service (IRS), Treasury.

ACTION: Notice of meeting.

SUMMARY: An open meeting of the Taxpayer Advocacy Panel Joint

Committee will be conducted. The Taxpayer Advocacy Panel is soliciting public comments, ideas, and suggestions on improving customer service at the Internal Revenue Service.

DATES: The meeting will be held Thursday, October 22, 2020.

FOR FURTHER INFORMATION CONTACT: Gilbert Martinez at 1–888–912–1227 or (737) 800–4060.

SUPPLEMENTARY INFORMATION: Notice is hereby given pursuant to Section 10(a)(2) of the Federal Advisory Committee Act, 5 U.S.C. App. (1988) that an open meeting of the Taxpayer Advocacy Panel Joint Committee will be held Thursday, October 22, 2020, at 1:30 p.m. Eastern Time via teleconference. The public is invited to make oral comments or submit written statements for consideration. For more information please contact Gilbert Martinez at 1–888–912–1227 or (737–800–4060), or write TAP Office 3651 S. IH–35, STOP 1005 AUSC, Austin, TX 78741, or post comments to the website: *http://www.improveirs.org.*

The agenda will include various committee issues for submission to the IRS and other TAP related topics. Public input is welcomed.

Dated: September 3, 2020.

Kevin Brown,

Acting Director, Taxpayer Advocacy Panel.

[FR Doc. 2020–19972 Filed 9–9–20; 8:45 am]

BILLING CODE 4830–01–P

DEPARTMENT OF THE TREASURY

Internal Revenue Service

Open Meeting of the Taxpayer Advocacy Panel's Special Projects Committee

AGENCY: Internal Revenue Service (IRS), Treasury.

ACTION: Notice of meeting.

SUMMARY: An open meeting of the Taxpayer Advocacy Panel's Special Projects Committee will be conducted. The Taxpayer Advocacy Panel is soliciting public comments, ideas, and suggestions on improving customer service at the Internal Revenue Service.

DATES: The meeting will be held Thursday, October 15, 2020.

FOR FURTHER INFORMATION CONTACT: Antoinette Ross at 1–888–912–1227 or 202–317–4110.

SUPPLEMENTARY INFORMATION: Notice is hereby given pursuant to Section 10(a)(2) of the Federal Advisory Committee Act, 5 U.S.C. App. (1988) that an open meeting of the Taxpayer Advocacy Panel's Special Projects Committee will be held Thursday, October 15, 2020, at 11:00 a.m. Eastern Time. The public is invited to make oral comments or submit written statements for consideration. Due to limited time and structure of meeting, notification of intent to participate must be made with Antoinette Ross. For more information please contact Antoinette Ross at 1–888–912–1227 or 202–317–4110, or write TAP Office, 1111 Constitution Ave. NW, Room 1509, Washington, DC 20224 or contact us at the website: *http://www.improveirs.org.* The agenda will include various IRS issues.

Dated: September 3, 2020.

Kevin Brown,

Acting Director, Taxpayer Advocacy Panel.

[FR Doc. 2020–19971 Filed 9–9–20; 8:45 am]

BILLING CODE 4830–01–P

FEDERAL REGISTER

Vol. 85 Thursday,

No. 176 September 10, 2020

Part II

Department of the Interior

Bureau of Land Management

43 CFR Part 3170

Oil and Gas Site Security, Oil Measurement, and Gas Measurement Regulations; Proposed Rule

DEPARTMENT OF THE INTERIOR

Bureau of Land Management

43 CFR Part 3170

[19X.LLWO310000.L13100000.PP0000]

RIN 1004–AE59

Oil and Gas Site Security, Oil Measurement, and Gas Measurement Regulations

AGENCY: Bureau of Land Management, Interior.

ACTION: Proposed rule.

SUMMARY: On November 17, 2016, the Bureau of Land Management (BLM) published in the **Federal Register** three final rules dealing with onshore oil and gas measurement and site security. In accordance with Executive Order 13783, Promoting Energy Independence and Economic Growth (March 28, 2017), and Secretary's Order No. 3349, American Energy Independence, (March 29, 2017), the BLM reviewed the affected regulations to determine if certain provisions may have added regulatory burdens that unnecessarily encumber energy production, constrain economic growth, and prevent job creation. As a result of this review, and in light of implementation issues that have arisen, the BLM is now proposing to modify certain provisions to reduce unnecessary and burdensome regulatory requirements.

DATES: Send your comments on this proposed rule to the BLM on or before November 9, 2020. *Information Collection Requirements:* If you wish to comment on the information collection requirements in this proposed rule, please note that the Office of Management and Budget (OMB) is required to make a decision concerning the collection of information contained in this proposed rule between 30 and 60 days after publication of this proposed rule in the **Federal Register**. Therefore, comments should be submitted to OMB by October 13, 2020.

ADDRESSES:

Mail: U.S. Department of the Interior, Director (630), Bureau of Land Management, Mail Stop 2134LM, 1849 C St. NW, Washington, DC 20240, Attention: 1004–AE59.

Personal or messenger delivery: U.S. Department of the Interior, Bureau of Land Management, 20 M Street SE, Room 2134 LM, Washington, DC 20003, Attention: Regulatory Affairs.

Federal eRulemaking Portal: https://www.regulations.gov. In the Searchbox, enter ''RIN 1004–AE59 and click the ''Search'' button. Follow the instructions at this website.

For Comments on Information-Collection Activities

Written comments and suggestions on the information collection requirements should be submitted within 30 days of publication of this notice to *www.reginfo.gov/public/do/PRAMain.* Find this particular information collection by selecting ''Currently under 30-day Review—Open for Public Comments'' or by using the search function. Please provide a copy of your comments to Bureau of Land Management, Faith Bremner, 20 M Street SE, Room 2134 LM, Washington, DC 20003, Attention: Regulatory Affairs (1004–AE59); or by email to *fbremner@blm.gov.* Please reference OMB Control Numbers 1004–0207, 1004–0209, 1004–0210; 1004–0137 in the subject line of your comments.

Do not submit to OMB comments that do not pertain to the proposed rule's information-collection burdens. The BLM is not obligated to consider or include in the Administrative Record for the final rule any comments, which do not relate to the information collection burdens, that you improperly direct to OMB.

FOR FURTHER INFORMATION CONTACT: Rebecca Good, Acting Division Chief, Fluid Minerals Division, 307–261–7633 or *rgood@blm.gov,* for information regarding the substance of this proposed rule or information about the BLM's Fluid Minerals program. For questions relating to regulatory process issues, contact Faith Bremner at 202–912–7441 or *fbremner@blm.gov.* Persons who use a telecommunications device for the deaf (TDD) may call the Federal Relay Service (FRS) at 1–800–877–8339, 24 hours a day, 7 days a week, to leave a message or question. You will receive a reply during normal business hours.

SUPPLEMENTARY INFORMATION:

I. List of Acronyms
II. Executive Summary
III. Public Comment Procedures
IV. Background
V. Incorporation by Reference of Industry Standards
VI. Discussion of the Proposed Rule
VII. Procedural Matters

I. List of Acronyms

AFMSS = Automated Fluid Minerals Support System
ATG = Automatic tank gauging
Bbl = Barrels
Bbl/d = Barrels per day
BLM = Bureau of Land Management
Btu = British thermal units
CA = Communitization agreement
CAA = Commingling and allocation agreement
CFR = Code of Federal Regulations
CMS = Coriolis measurement system
DOI = Department of the Interior
E.O. = Executive Order
EGM = Electronic gas metering
FMP = Facility Measurement Point
GAO = Government Accountability Office
GARVS = Gas Annual Reporting and Verification System
GC = Gas chromatograph
GS = General Schedule
GSA = Gas storage agreement
HV = High-volume
IMs = Instructional Memoranda
LACT = Lease Automatic Custody Transfer
LV = Low-volume
Mcf = Thousand cubic feet
Mcf/d = Thousand cubic feet per day
MDS = Measurement data system
NGL = Natural gas liquids
NGS = Natural gas storage facilities
OGOR = Oil and Gas Operations Report
ONRR = Office of Natural Resource Revenue
OPM = Office of Personnel Management
PMT = Production Measurement Team
PRA = Paperwork Reduction Act
QTR = Quantity transaction record
RIA = Regulatory Impact Analysis
SBA = Small Business Administration
Scf = Standard cubic foot
S.O. = Secretarial Order
SME = Subject matter expert
SWD = Salt water disposal
Tcf = Trillion cubic feet
Unit PA = Unit participation area.
VHV = Very-high-volume
VLV = Very-low-volume
WDP = Waste discharge permit
WDW = Water disposal well
WIW = Water injection well

II. Executive Summary

On November 17, 2016, the Bureau of Land Management (BLM) published in the **Federal Register** the three following final rules: (1) ''Onshore Oil and Gas Operations; Federal and Indian Oil and Gas Leases; Site Security'' (81 FR 81365), codified at 43 CFR subparts 3170 and 3173; (2) ''Onshore Oil and Gas Operations; Federal and Indian Oil and Gas Leases; Measurement of Oil'' (81 FR 81462), codified at 43 CFR subpart 3174; and (3) ''Onshore Oil and Gas Operations; Federal and Indian Oil and Gas Leases; Measurement of Gas'' (81 FR 81516), codified at 43 CFR subpart 3175. Collectively, we refer to these three rules as the ''2016 Final Rules.''

The 2016 Final Rules were prompted by external and internal oversight reviews, which found that many of the BLM's production measurement and accountability policies were outdated and inconsistently applied. The rules addressed some of the Government Accountability Office (GAO) concerns for areas of high risk with regard to production accountability. The rules also provided a process for approving new measurement technologies that meet defined performance standards.

The rules became effective on January 17, 2017.

Since the issuance of the 2016 Final Rules, representatives of the oil and gas industry and other interested stakeholders have raised a number of issues and concerns related to the implementation of the new regulations. The BLM agrees that there have been challenges with implementing some of the provisions of the 2016 Final Rules and has attempted to address some of them through administrative policy directives.[1] However, the BLM can address other provisions only by revising the 2016 Final Rules through a rulemaking action.

In addition, on March 28, 2017, President Trump issued Executive Order (E.O.) 13783, ''Promoting Energy Independence and Economic Growth'' (82 FR 16093). E.O. 13783 holds that ''[i]t is in the national interest to promote clean and safe development of our Nation's vast energy resources, while at the same time avoiding regulatory burdens that unnecessarily encumber energy production, constrain economic growth, and prevent job creation.'' E.O. 13783 directed Federal agencies, including the BLM, to ''review all existing regulations, orders, guidance documents, policies, and any other similar agency actions . . . that potentially burden the development or use of domestically produced energy resources, with particular attention to oil, natural gas, coal, and nuclear energy resources.'' E.O. 13783, Section 2(a). Notably, these Executive Orders did not prescribe specific outcomes, rather they directed review of the regulations, in accordance with all Federal laws.

On March 29, 2017, the Secretary of the Interior issued Secretary's Order (S.O.) No. 3349, ''American Energy Independence.'' It directed DOI bureaus to ''identify all existing [DOI] actions . . . that potentially burden . . . the development or utilization of domestically produced energy resources, with particular attention to oil, natural gas, coal, and nuclear resources.'' S.O. 3349, Section 5(c)(v).

The BLM reviewed the 2016 Final Rules for opportunities to address implementation challenges and to determine if certain provisions may impose regulatory burdens that unnecessarily encumber energy production, constrain economic growth, and prevent job creation. As a result of this review, the BLM is now proposing to modify certain provisions of 43 CFR subparts 3170, 3173, 3174, and 3175 to reduce unnecessary and burdensome regulatory requirements.

The proposed rule would remove or revise requirements that the BLM has found to be unnecessarily burdensome, unclear, inconsistent, or otherwise problematic. The proposed rule would also adopt updated industry standards, where appropriate, and provide for the use of emerging measurement technologies. The BLM has concluded that the proposed changes will not affect its ability to implement GAO and Office of Inspector General (OIG) recommendations regarding oil and gas production reporting and accountability. The BLM does not anticipate that this proposed rule would have a significant impact on royalty revenues. First, as explained in the preamble to the 2016 rules, the goal of the 2016 rules was to reduce uncertainty, remove bias, and increase verifiability in production measurement. While improvements in these areas help to ensure accurate royalty payments, it is difficult to determine their likely overall impact because such improvements do not necessarily increase royalty revenues. See 81 FR 81553. The one provision from the 2016 rules that was specifically assessed in the 2016 Regulatory Impact Analysis (RIA) and estimated to likely increase royalty revenues—the requirement that gas heating values be reported on a dry basis—is not being modified in this proposed rule.

Furthermore, the BLM notes that this proposed rule would continue to address the major issues identified by the GAO in 2010 and 2015. Specifically, the GAO had faulted the BLM's prior regulatory regime for inconsistently tracking how oil and gas were measured and failing to account for current measurement technologies and standards. See 81 FR 81463; 81 FR 81517. The 2016 rule addressed those issues, and this proposed rule would not backtrack on the BLM's progress in these areas. This proposed rule would maintain consistent, nation-wide measurement requirements and would allow for the use of current measurement technologies.

III. Public Comment Procedures

If you wish to comment on this proposed rule, you may submit your comments to the BLM by mail, personal or messenger delivery, or through *https://www.regulations.gov* (see the **ADDRESSES** section).

Please make your comments on the proposed rule as specific as possible, confine them to issues pertinent to the proposed rule, explain the reason for any changes you recommend, and include any supporting documentation. Where possible, your comments should reference the specific section or paragraph of the proposal that you are addressing. The BLM is not obligated to consider or include in the Administrative Record for the final rule comments that we receive after the close of the comment period (see **DATES**) or comments delivered to an address other than those listed previously (see **ADDRESSES**).

Comments, including names and street addresses of respondents, will be available for public review at the address listed under ''**ADDRESSES:** *Personal or messenger delivery*'' during regular hours (7:45 a.m. to 4:15 p.m.), Monday through Friday, except holidays. Before including your address, telephone number, email address, or other personal identifying information in your comment, be advised that your entire comment—including your personal identifying information—may be made publicly available at any time. While you can ask us in your comment to withhold from public review your personal identifying information, we cannot guarantee that we will be able to do so.

As explained later, this proposed rule would include revisions to information collection requirements that must be approved by the Office of Management and Budget (OMB). If you wish to comment on the revised information collection requirements in this proposed rule, please note that such comments must be sent directly to the OMB in the manner described in the **ADDRESSES** section. The OMB is required to make a decision concerning the collection of information contained in this proposed rule between 30 and 60 days after publication of this document in the **Federal Register**. Therefore, a comment to the OMB on the proposed information collection revisions is best assured of being given full consideration if the OMB receives it by October 13, 2020.

IV. Background

Americans enjoy a quality of life today that depends largely upon a stable and abundant supply of affordable energy. The Federal energy portfolio managed by the BLM includes oil and gas, coal, oil shale and tar sands, and, increasingly, renewable sources of energy, such as wind, solar and geothermal.

Oil and gas from public and Indian lands are a significant part of this energy mix. For Fiscal Year (FY) 2018, sales of

[1] These administrative policy directives were contained in three Instruction Memoranda (IMs): IM No. 2017–032 (Jan. 17, 2017), IM No. 2018–069 (June 29, 2018), and IM No. 2018–077 (June 29, 2018). All three of these IMs are available on the BLM's website at *https://www.blm.gov/policy/instruction-memorandum.*

oil, gas, and natural gas liquids produced on Federal and Indian lands accounted for approximately 6 percent of all oil, 10 percent of all natural gas, and 7 percent of all natural gas liquids produced in the United States.

The BLM manages the Federal Government's onshore subsurface mineral estate—about 700 million acres (30 percent of the U.S. landmass)—for the benefit of the American public. It also manages some aspects of oil and gas development for Indian tribes (not including the Osage Tribe).

Consistent with statutory requirements, Federal lease contracts with private parties specify that royalties are owed on all production removed or sold from Federal and Indian oil and gas leases. The basis for those royalty payments is the measured volume and quality of the production from those leases. In FY 2018, over $2.14 billion in Federal royalties, rental payments, bonus bids, and other revenues, were generated from Federal onshore oil and gas leases. These revenues were split between the U.S. Treasury and the States where the development occurred. Also in FY 2018, over $830 million in royalties, rental payments and other revenues were generated from tribal oil and gas leases. All of these revenues were distributed to the appropriate tribes and individual allotment owners.

Given the magnitude of this production and the BLM's statutory management obligations, it is critically important that the BLM ensure that operators accurately measure, report, and account for that production. To that end, the BLM has instituted regulations relating to site security, oil measurement, and gas measurement. The BLM maintains an inspection and enforcement program to ensure that operators comply with these regulations. Operators are required to report production volumes and submit royalty payments to the Office of Natural Resources Revenue (ONRR). The ONRR maintains an audit program to ensure that the government receives all royalties owed.

The basis for this proposed rule is the Secretary of the Interior's authority under various Federal and Indian mineral leasing laws to manage oil and gas operations. These mineral leasing laws are: The Mineral Leasing Act of 1920, 30 U.S.C. 181 *et seq.;* the Mineral Leasing Act for Acquired Lands, 30 U.S.C. 351 *et seq.;* the Federal Oil and Gas Royalty Management Act of 1982, 30 U.S.C. 1701 *et seq.;* the Indian Mineral Leasing Act, 25 U.S.C. 396a *et seq.;* the Act of March 3, 1909, 25 U.S.C. 396; the Indian Mineral Development Act, 25 U.S.C. 2101 *et seq.;* and the Federal Land Policy and Management Act, 43 U.S.C. 1701 *et seq*. Each of these statutes gives the Secretary the authority to promulgate necessary and appropriate rules and regulations governing Federal and Indian (except Osage Tribe) oil and gas leases. See 30 U.S.C. 189; 30 U.S.C. 359; 25 U.S.C. 396d; 25 U.S.C. 396; 25 U.S.C. 2107; and 43 U.S.C. 1740.

In recognition of the fact that not all oil and gas wells are identical due to geology and other circumstances, the Mineral Leasing Act provides the Secretary with statutory authority to reduce royalty rates ''for the purposes of encouraging the greatest ultimate recovery of [oil and gas] and in the interest of conservation of natural resources,'' whenever it is necessary to do so in order to ''promote development'' or because the lease could not be ''successfully operated'' otherwise. 30 U.S.C. 209. This provision acknowledges the changing economics of Federal oil and gas wells and provides guidance that, in cases such as marginal wells, the Secretary has discretion to prioritize production over royalties to ensure the maximum recovery of the resources.

The primary statutory authority underpinning the BLM's site security and measurement regulations is in the Federal Oil and Gas Royalty Management Act of 1982 (FOGRMA) (30 U.S.C. 1701–1756). Congress enacted FOGRMA upon finding that ''the system of accounting with respect to royalties and other payments due and owing on oil and gas produced from [Federal and Indian] lease sites is archaic and inadequate.'' 30 U.S.C. 1701(a)(2). Among Congress' purposes in enacting FOGRMA was ''to define the authorities and responsibilities of the Secretary of the Interior to implement and maintain a royalty management system'' and ''to require the development of enforcement practices that ensure the prompt and proper collection and disbursement of oil and gas revenues owed to the United States and Indian lessors.'' 30 U.S.C. 1701(b)(2)–(3). FOGRMA states that the Secretary ''shall establish a comprehensive inspection, collection and fiscal and production accounting and auditing system to provide the capability to accurately determine oil and gas royalties, interest, fines, penalties, fees, deposits, and other payments owed, and to collect and account for such amounts in a timely manner.'' 30 U.S.C. 1711(a). FOGRMA authorizes enforcement of this system through inspections, audits, investigations, and civil penalties. 30 U.S.C. 1711, 1717–19. FOGRMA also states that an operator shall develop and comply with a site security plan that conforms ''with such minimum standards as the Secretary may prescribe by rule, taking into account the variety of circumstances at lease sites.'' 30 U.S.C. 1712(b). FOGRMA contains a ''broad grant of rulemaking authority to achieve its objectives.'' *Wyoming* v. *DOI,* 2017 WL 161428, *6 (D. Wyo. 2017). Specifically, FOGRMA states that ''the Secretary shall prescribe such rules and regulations as he deems reasonably necessary to carry out this chapter.'' 30 U.S.C. 1751(a).

The Secretary's authority to regulate onshore oil and gas operations under the mineral leasing laws has been delegated to the BLM. In implementing this authority, the BLM has issued regulations governing onshore Federal and Indian oil and gas production. This proposed rule would modify the BLM's regulations pertaining to site security and the measurement of oil and gas produced or sold from a lease.

The site security requirements in this proposed rule would ensure the proper and secure handling of production from Federal and Indian onshore oil and gas leases. The proper handling of this production is essential to accurate measurement, proper reporting, and overall production accountability. The oil and gas measurement requirements of this proposed rule would ensure accurate measurement and reporting of onshore oil and gas production. Taken together, the requirements of this proposed rule would ensure that the American public, Indian tribes, and allottees receive royalties owed to them on oil and gas production.

On November 17, 2016, the BLM published in the **Federal Register** the three final rules: (1) ''Onshore Oil and Gas Operations; Federal and Indian Oil and Gas Leases; Site Security'' (81 FR 81365), codified at 43 CFR subparts 3170 and 3173; (2) ''Onshore Oil and Gas Operations; Federal and Indian Oil and Gas Leases; Measurement of Oil'' (81 FR 81462), codified at 43 CFR subpart 3174; and (3) ''Onshore Oil and Gas Operations; Federal and Indian Oil and Gas Leases; Measurement of Gas'' (81 FR 81516), codified at 43 CFR subpart 3175.

The 2016 Final Rules were prompted by external and internal oversight reviews, which found that many of the BLM's production measurement and accountability policies were outdated and inconsistently applied. The rules addressed the concerns raised by the GAO that led the GAO to designate DOI's onshore production accountability as an area of high risk. GAO considers a program or operation

to be high risk when, after evaluation, the program or operation is determined to be vulnerable to fraud, waste, abuse, and mismanagement, or in need of transformation. (*https://www.gao.gov/highrisk/overview*) The 2016 Final Rules also provided a process for approving new measurement technologies that meet defined performance goals. The rules became effective on January 17, 2017.

On March 28, 2017, President Trump issued Executive Order (E.O.) 13783, ''Promoting Energy Independence and Economic Growth'' (82 FR 16093). E.O. 13783 directed Federal agencies, including the BLM, to ''review all existing regulations, orders, guidance documents, policies, and any other similar agency actions. . . that potentially burden the development or use of domestically produced energy resources, with particular attention to oil, natural gas, coal, and nuclear energy resources.'' E.O. 13783, Section 2(a). On March 29, 2017, then Secretary of the Interior Ryan Zinke issued S.O. 3349, entitled, ''American Energy Independence,'' to implement E.O. 13783. S.O. 3349 directed DOI bureaus to ''identify all existing [DOI] actions . . . that potentially burden . . . the development or utilization of domestically produced energy resources, with particular attention to oil, natural gas, coal, and nuclear resources.'' S.O. 3349, Section 5(c)(v).

Additionally, once the BLM began enforcing the 2016 Final Rules, the BLM became aware of practical implementation challenges associated with the rules. These challenges include differing interpretations of specific rule language among industry and BLM personnel, as well as the identification of less burdensome approaches that would achieve the same performance outcomes sought by the 2016 Final Rules. For example, Lease Automatic Custody Transfer (LACT) systems (composed of a meter, ability to prove the meter, devices for determining temperature, pressure, and liquid sampling, and a means for determining nonmerchantable oil, referenced under existing § 3174.8(b)) are required to follow the industry standard API chapter 6.1 (API 6.1). The use of this API standard created confusion both within industry and the BLM with respect to what equipment was required as opposed to optional. To eliminate this confusion, this proposed rule, in § 3174.100 through § 3174.108, would remove the reference to API 6.1 and would list the required equipment for Facility Measurement Point (FMP) LACT systems. Other examples of implementation challenges the BLM encountered include:

- The delay in the development of the AFMSS 2 system (the means by which operators would apply for FMP numbers) undermined the ''phase-in'' periods in subpart 3174, as those phase-in periods were based on the dates on which operators were required to apply for FMP numbers.
- There were questions about how the rules should be applied to situations not specifically addressed in the regulation text, including temporary measurement equipment and gas storage agreements.
- Some operators employed water-vapor-detection devices that were not designed for natural gas applications, creating the potential for misreporting of hydrocarbon liquids as water.
- The time period indicated by the word ''monthly'' was found in practice not to be clear.
- The meaning of ''normal'' operating conditions for meter proving under subpart 3174 proved not to be clear when implemented.
- The recordkeeping requirements for water-draining operations in subpart 3173 proved to be burdensome.

On June 22, 2017, the Department of the Interior (Interior) published a notice in the **Federal Register** requesting public input on how Interior could improve implementation of various regulatory reform initiatives—including those contained in E.O. 13783 and S.O. 3349—and identify regulations for repeal, replacement, or modification. 82 FR 28429 (June 22, 2017). Among the comments Interior received in response to this request were five comments that directly addressed the site security and measurement regulations. Among the commenters were an individual, an oil and gas exploration and production company, two industry trade associations, and an Alaska Native Regional Corporation. The comments asked the BLM to make certain changes to the regulations, including: Updating the list of incorporated industry standards; providing for automatic acceptance of measurement devices meeting certain standards; more evenly phasing-in the subparts 3173 and 3174 requirements; preserving existing variances, commingling agreements, and off-site measurement approvals; accommodating ''economically marginal'' properties; and, reducing the frequency of required meter provings and meter-tube inspections.

In light of the foregoing, the BLM reviewed the 2016 Final Rules for opportunities to address the implementation challenges and to determine if certain provisions may have added regulatory burdens that unnecessarily encumber energy production, constrain economic growth, and prevent job creation. As a result of this review, the BLM is now proposing to modify certain provisions of 43 CFR subparts 3170, 3173, 3174, and 3175 to remedy implementation issues and reduce unnecessary and burdensome regulatory requirements.

When the BLM issued the 2016 Final Rules, it determined that none of the rules were economically significant according the criteria in E.O. 12866, ''Regulatory Planning and Review.'' However, regardless of classification under E.O. 12866, the 2016 Final Rules posed considerable costs to industry and the BLM.

The BLM examined the burdens to industry and the BLM in its RIA for each of the 2016 Final Rules. Those estimated burdens are summarized as follows:

- For 43 CFR subpart 3173, $29.6 million in each of the first 3 years and $14.5 million per year thereafter (see 2016 RIA for subpart 3173, at p. 13);
- For 43 CFR subpart 3174, $6.1 million in each of the first 3 years and $4.9 million per year thereafter (see 2016 RIA for subpart 3174, at p. 11); and
- For 43 CFR subpart 3175, $20.3 million in each of the first 3 years and $12.4 million per year thereafter (see 2016 RIA for subpart 3175, at p. 11).

In developing this proposed rule, the BLM has sought to reduce the regulatory burdens associated with the 2016 Final Rules while maintaining appropriate safeguards to ensure production accountability. While the proposed revisions would streamline, reduce, or eliminate some of the burdens associated with the 2016 Final Rules, the BLM believes that the 2019 revisions would not compromise the government's ability to ensure accurate and reliable royalty collection. The BLM would maintain its capacity to ensure a fair return to the American public and the tribes from oil and gas operations on the Federal and Indian mineral estate. Doing so without unduly burdening development, to ensure the Nation's energy security and independence, balances its royalty mission with the goals stated in E.O. 13783 and S.O. 3349 in a fully complimentary and appropriate manner.

The BLM notes that, while the BLM was separately reviewing the 2016 Final Rules and considering appropriate revisions, the Department of the Interior's Royalty Policy Committee (RPC), Subcommittee on Planning, Analysis, and Competitiveness, recommended that the BLM revise the 2016 Final Rules. The BLM is aware that the U.S. District Court for the District of

Montana has enjoined ''further use or reliance on'' recommendations issued by the RPC. *Western Organization of Resource Councils* v. *David Bernhardt,* 9:18–cv–00139–DWM (D. Mont. 8/13/2019). To ensure compliance with the District Court's injunction, the BLM reviewed the RPC's recommendations and has confirmed that this proposed rule does not use or rely on RPC recommendations. Rather, the BLM is relying on facts, analysis, and recommendations, as set forth in the Background section of this proposed rule, that are independent of any recommendations of the RPC, including its subcommittees. To be clear, the BLM is *not* relying on any RPC recommendation in this proposed rule and this proposed rule is not intended to implement any RPC recommendation. Furthermore, the BLM requests that commenters refrain from using or relying on RPC recommendations in their comments.

V. Incorporation by Reference of Industry Standards

This proposed rule would incorporate a number of industry standards and recommended practices, either in whole or in part, without republishing the standards in their entirety in the CFR, a practice known as incorporating by reference (IBR). These standards have been developed through a consensus process, facilitated by the API, with input from the oil and gas industry and Federal agencies with oil and gas operational oversight responsibilities. The BLM has reviewed these standards and determined that they would achieve the intent of 43 CFR 3174.31 through 3174.180 and 43 CFR 3175.31 through 3175.140 of this proposed rule. The legal effect of IBR is that the incorporated standards would become regulatory requirements. With the approval of the Director of the Federal Register, this proposed rule would incorporate the current versions of the standards listed.

Some of the standards referenced in this section would be incorporated in their entirety. For other standards, the BLM would incorporate only those sections that are relevant to the rule, meet the intent of §§ 3174.30 and 3175.30 of the proposed rule, and do not need further clarification.

The National Technology Transfer and Advancement Act (NTTAA), Public Law 104–113 (NTTAA), 15 U.S.C. 3701 *et seq.* (Pub. L. 104–113), charges, with certain exceptions, that ''all Federal agencies and departments shall use technical standards that are developed or adopted by voluntary consensus standards bodies, using such technical standards as a means to carry out policy objectives or activities determined by the agencies and departments.'' The BLM may incorporate these standards into its regulations by reference without republishing the standards in their entirety in the regulations. The legal effect of incorporation by reference is that the incorporated standards become regulatory requirements. This incorporated material, like any other regulation, has the force and effect of law. Operators, lessees, and other regulated parties must comply with the documents incorporated by reference in the regulations.

The incorporation of industry standards follows the requirements found in 1 CFR part 51. The industry standards in this proposed rule are eligible for incorporation under 1 CFR 51.7 because, among other things, they would substantially reduce the volume of material published in the **Federal Register**; the standards are published, bound, numbered, and organized; and the standards incorporated are readily available to the general public through purchase from the standards organization or through inspection at any BLM office with oil and gas administrative responsibilities (1 CFR 51.7(a)(3) and (4)). The language of incorporation in §§ 3174.30 and 3175.30 meets the requirements of 1 CFR 51.9. Where appropriate, the BLM would incorporate by reference an industry standard governing a particular process and then impose requirements that add to or modify the requirements imposed by that standard (*e.g.,* the BLM sets a specific value for a variable where the industry standard proposed a range of values or options).

All material that is proposed to be incorporated by reference is available for inspection at the Bureau of Land Management, Division of Fluid Minerals, 20 M Street SE, Washington, DC 20003, 202–912–7162; and at all BLM offices with jurisdiction over oil and gas activities; and is available from the sources listed below. Before visiting a BLM office during the Covid–19 pandemic, please call ahead to confirm that the office is open to the public. If it is not open, you may make an appointment to visit the office.

All American Gas Association (AGA) documents are available for inspection and purchase from AGA, 400 North Capitol Street NW, Suite 450, Washington, DC 20001; telephone 202–824–7000. All of the API materials are available for inspection and purchase at the API, 1220 L Street NW, Washington, DC 20005; telephone 202–682–8000; API also offers free, read-only access to some of the material at *http://publications.api.org.*

The standards that are proposed to be incorporated are summarized as part of the section-by-section analysis for §§ 3174.30 and 3175.30 in section V of this preamble.

VI. Discussion of the Proposed Rule

1. Summary

The following is a summary of the proposed modifications to subparts 3170, 3173, 3174, and 3175:

43 CFR subpart 3170—Onshore Oil and Gas Production: General

- Various changes are required to conform with the substantive changes to 43 CFR subparts 3173, 3174, and 3175.

43 CFR subparts 3173—Requirements for Site Security and Production Handling

- Reduce certain equipment seal requirements for equipment locations deemed to be of low risk to mishandling or theft;
- Reduce recordkeeping requirements associated with water draining operations;
- Reduce requirements for co-located facility on-site facility diagrams;
- Remove a requirement to submit a new site facility diagram when change of operator occurs;
- Increase volume thresholds for submitting FMP applications; and
- Remove immediate assessment for seals associated with LACT units.

43 CFR subpart 3174—Oil Measurement

- Update all incorporated API standards to the latest published edition;
- Create a third low-volume FMP category with no measurement uncertainty requirements;
- Add Production Measurement Team (PMT) review and BLM approval requirements for electronic thermometers, LACT sampling systems, temperature and pressure transducers, and temperature averaging devices;
- Delay the requirement for using BLM-approved equipment on existing high-volume FMPs and low-volume FMPs until such time as the equipment is replaced or the FMP elevates to a very-high-volume FMP; and
- Remove the immediate assessment for failure to notify the BLM of a LACT component failure.

43 CFR subpart 3175—Gas Measurement

- Update all incorporated API standards to the latest published edition;
- Add PMT review and BLM approval requirements for Gas

Chromatograph (GC) software and water vapor detection methods;

• Reduce basic meter-tube inspection frequency and remove detailed meter-tube inspection requirement for low-volume FMPs;

• Add initial meter-tube inspections for high- and very-high volume FMPs;

• Eliminate the requirement of installing composite samplers or on-line GCs for very-high volume FMPs; and

• Add language to make portions of the rule apply to gas meters associated with gas storage agreements.

The proposed modifications to subparts 3170, 3173, 3174, and 3175 are described in detail in the following section-by-section discussion.

B. Section-by-Section Discussion

The following discussion addresses the proposed changes from the existing regulation. If a provision is not specifically discussed in this section-by-section analysis, then the provision is essentially the same as the existing regulation.

1. Section-by-Section Discussion for Changes to Subpart 3170

The following table provides a cross-walk comparison of proposed subpart 3170 to the corresponding sections in existing subpart 3170:

Existing subpart 3170 sec.	Proposed subpart 3170 sec.
3170.1 Authority	3170.1 Authority.
3170.2 Scope	3170.2 Scope.
3170.3 Definitions and acronyms	3170.10 Definitions and acronyms.
3170.4 Prohibitions against by-pass and tampering	3170.20 Prohibitions against by-pass and tampering.
3170.5 [Reserved]	3170.30 Alternative measurement equipment and procedures.
3170.6 Variances	3170.40 Variances.
3170.7 Required recordkeeping, records retention, and records submission.	3170.50 Required recordkeeping, records retention, and records submission.
3170.8 Appeal procedures	3170.60 Appeal procedures.
3170.9 Enforcement	3170.70 Enforcement.

The following discussion addresses section-by-section changes in the proposed subparts 3170 from the existing subparts 3170.

Section 3170.2 Scope

The BLM is proposing to add a new paragraph (f) to § 3170.2. Proposed § 3170.2(f) would expand the scope of the subpart 3170 regulations to include ''measurement points on BLM-managed gas-storage agreements.'' Proposed subpart 3175 would add requirements for gas-storage-agreement measurement points (discussed in detail later), thus necessitating this amendment to the Scope provision.

The BLM is not proposing any other amendments to the Scope provision for subpart 3170. However, the BLM notes that industry representatives have recommended that the BLM set a Federal-interest threshold for application of its site-security, oil-measurement, and gas-measurement regulations to units and Communitization Agreements (CAs) (created for the cooperative development of multiple leases in a State regulatory agency's assigned drilling spacing (43 CFR 3217.11)) that produce a mix of Federal and non-Federal oil and gas. The rationale for this suggestion appears to be that the burdens associated with BLM regulation of site security and measurement at a unit or CA should be justified by a significant Federal interest in that unit or CA. The BLM has considered this suggestion, but has not put forth a proposed Federal-interest threshold due to the difficulty of identifying a threshold that would satisfy the BLM's obligations under FOGRMA and that would protect the Federal royalty interest in the variety of circumstances under which Federal oil and gas production occurs. The BLM is requesting comment on whether it should establish a Federal-interest threshold for applying its site-security and oil- and gas-measurement regulations to units and CAs. The BLM is particularly interested in comment on the following: The costs and benefits of setting a Federal-interest threshold; what an appropriate threshold would be; whether, and to what extent, such a threshold would jeopardize the Federal royalty interest or fail to satisfy the BLM's obligations under FOGRMA; and, whether a similar threshold could be adopted for applying the regulations to units and CAs producing Indian oil and gas. Finally, the BLM recognizes that the States in which Federal and Indian oil and gas production occurs have interests that may be impacted by BLM regulation of mixed-ownership units and CAs; the BLM therefore specifically requests comment from the governments of those States on this issue.

Section 3170.1 Definitions and Acronyms

This proposed section corresponds to existing § 3170.3 and would define the terms that are used in more than one part 3170 subpart. The proposed rule would renumber the section to § 3170.10 for consistency of numbering across the part 3170 subparts.

A new definition for ''Alarm log'' would be added in proposed § 3170.10. Since the term would be used in proposed subparts 3174 and 3175, its definition belongs in § 3170.10.

The proposed rule would delete the definition for ''API (followed by a number).'' This definition was originally needed to accommodate an existing requirement that operators identify certain wells by their API numbers. Proposed changes to subparts 3173, 3174, and 3175 would delete all references to API well numbers and require operators to identify wells by their US well numbers. API transferred the unique well identifier standard to the Professional Petroleum Data Management (PPDM) in 2010. At that time, PPDM created the US well number as the new industry standard for identifying oil and gas wells.

The proposed rule would modify the existing definition for ''By-pass.'' The revised definition would state that piping around a meter with a double block and bleed valve or a series of valves that ensures valve integrity that is effectively sealed as required under proposed § 3173.20 would not be considered a by-pass where approved by the BLM. The BLM believes the proposed change to the definition would allow for industry innovation in measurement while ensuring the FMP allows for oil or gas to flow with accountability.

The proposed rule would modify the definition of ''Configuration log'' and move it from existing § 3175.10 to proposed § 3170.10 because the term is

used in more than one part 3170 subpart. The proposed change to the definition would align it with the industry standard, API Chapter 21.1 Flow Measurement Using Electronic Metering Systems—electronic Gas Measurement—Second Edition, thereby preventing confusion among industry and the BLM as to the meaning of the term.

The BLM proposes to move the definition for ''Event log'' from existing subparts 3174 and 3175, where the term is used, to proposed § 3170.10. This proposed rule would also modify the existing definition of ''event log'' to align it with the current industry standard published in API Chapter 21.1 Flow Measurement Using Electronic Metering Systems—electronic Gas Measurement—Second Edition. The proposed modification to the definition would add clarity and eliminate confusion over the use of the term by industry and the BLM.

The BLM is proposing several changes to the definition of a ''Facility measurement point (FMP).'' First, the definition would be expanded to include not only measurement affecting the calculation of the volume and quality of production from a Federal or Indian lease, unit Participating Area (PA) (part of unit area which has proven to be productive of oil or gas in paying quantities or which is necessary for unit operations and to which production is allocated), or CA for which royalty is owed, but also measurement affecting the calculation of the volume and quality of the production on native gas or oil from gas storage agreements, which royalty is also owed.

Second, the proposed rule would remove from the FMP definition's second sentence the clause ''but is not limited to, the approved point of royalty measurement and.'' Upon review, the BLM does not foresee any circumstances under which an FMP is not relevant to the determination of the allocation of production to Federal or Indian leases, unit PAs, or CAs. Therefore, the clause was removed and the proposed definition reads, ''An FMP includes all measurement points relevant to determining the allocation of production to Federal or Indian leases, unit PAs, or CAs.''

Third, the BLM is proposing to remove the fourth sentence from the existing definition, ''An FMP also includes a meter or measurement facility used in the determination of the volume or quality of royalty-bearing oil or gas produced before BLM approval of an FMP under § 3173.12.'' The proposed definition of FMP is not couched in terms of ''BLM-approved'' measurement points as the existing definition is written. Under the plain terms of the proposed definition, a measurement point affecting royalty or injection or withdrawal fees would be an FMP, even in the absence of BLM approval. The fourth sentence of the existing definition is therefore no longer necessary.

Fourth, the BLM is proposing to reword the last sentence in the existing definition for an FMP that now says the BLM will not approve a gas processing plant tailgate meter located off the lease, unit or CA, as an FMP. Instead, the proposed rule would change the last sentence to say that an FMP cannot be located at the tailgate of a gas-processing plant located off the lease, unit, or CA. This change would reflect proposed changes to the BLM's FMP number approval process. Existing § 3173.12(a) and (b) would be deleted. Existing § 3173.12(b) says the BLM will not approve as an FMP a gas processing plant tailgate meter located off the lease, unit, or communitized area. The proposed change to the definition would incorporate the intent of the existing § 3173.12(b) deleted paragraph.

The last proposed change to the existing FMP definition involves adding a sentence to the FMP definition that would resolve the confusion over measuring flared volumes that has arisen since the BLM published its waste prevention regulations (43 CFR subpart 3179). In the proposed FMP definition, measurement points for flared volumes are not FMPs, even though royalty may be due on the flared volumes. Measurement and reporting requirements for flared gas are contained in 43 CFR 3179.301.

In addition to the proposed changes to the FMP definition, the BLM is proposing to add a definition for ''FMP number.'' The FMP number would be the number that the BLM would assign to the FMP after reviewing the operator's FMP number application. This change would reflect proposed changes to the BLM's FMP-number approval process (see discussion of proposed § 3173.60 later in this preamble).

The proposed rule would relocate the definition for ''Land description'' from existing § 3173.1 to proposed § 3170.10, with a minor revision. The term ''Land description'' is used in subparts 3170 and 3173, so it belongs in § 3170.10. The revision would acknowledge that the U.S. Department of Interior's Manual of Surveying Instructions is periodically amended and that the most recent version would apply to specifications used in land descriptions.

The proposed rule would add a definition for ''Measurement data system (MDS),'' which does not appear in the existing rule. The definition is needed because proposed subparts 3174 and 3175 would use this new term. Since this definition is used in more than one subpart, it should be located in proposed § 3170.10.

Proposed § 3170.10 would add a new definition for ''Notify.'' Existing part 3170 does not have a definition for ''Notify,'' despite the fact the term is used throughout its subparts. In the existing regulation, responding to comments on § 3174.7(d) and (e), the BLM agreed with the commenters the term ''Notify'' was ambiguous and required a definition. Notify could mean a Sundry Notice, phone call, or many other forms of communication. The operators were concerned they would be notifying the BLM in a manner consistent with the regulation. In addition, there was a concern the BLM would interpret the term differently across field offices. In one field office the term ''Notify'' might mean Sundry Notice, while in another a phone call would suffice. Although the BLM defined ''Notify'' in the existing subpart 3174 preamble, the definition for ''Notify'' did not appear in the final regulation text in subpart 3170 or subpart 3174. Since the term ''Notify'' appears throughout the 3170 subpart, the BLM proposed to include the definition in subpart 3170. The BLM seeks to rectify this oversight by including the definition for ''Notify'' in proposed subpart 3170.

The proposed rule would relocate the definition of ''Permanent measurement facility'' from existing § 3173.1 to § 3170.10. The proposed rule would also change the length of time that equipment used to determine the quantity or quality of production or to store production could be used at an FMP before it would be considered a permanent measurement facility. The existing definition defines permanent as being 6 months or longer. The 6-month standard was based on the BLM's typical time frame for conducting an initial environmental inspection of production facilities after a well has been completed. The revised rule would set a 3-months standard that would more accurately reflect the concept of permanent facilities. The BLM believes 3 months is a sufficient amount of time for operators to construct facilities and begin use of an FMP number.

The proposed § 3170.10 definition for Production Measurement Team (PMT) would delete the last sentence which states the purpose of the PMT. The final sentence of the definition is redundant

and the BLM believes the intent of the purpose is already contained within the first sentence.

Proposed § 3170.10 would add a definition for ''Temporary measurement facility.'' The existing rule does not address temporary measurement, but proposed subparts 3174 and 3175 would. This definition would specify that any measurement equipment in place for less than 3 months would be considered temporary and would not need an FMP number even though the FMP is being used to measure production for the purposes of royalty collection.

Proposed § 3170.10 would add the new definition ''US well number'' to accommodate a proposed requirement that operators switch from using API well numbers to identify their wells to using US well numbers. Created by the PPDM Association in 2010, the US well number is the new industry standard for identifying oil and gas wells.

Section 3170.30 Alternative Measurement Equipment and Procedures

This proposed new section would clarify the process that operators or manufacturers must follow to get BLM approval for using alternative oil or gas measurement equipment or measurement methods. The proposed language is substantially similar to language in existing § 3174.4(d) and § 3174.13, with the biggest change being that it would apply to both oil and gas equipment and methods. In addition the proposed rule would require approval of alternative measurement equipment and procedures to meet or exceed the objectives in minimum standards in part 3170. Alternative measurement equipment and procedures would need to meet or exceed measurement performance requirements, audit trail and verification requirements, and site security requirements. This proposed new section would replace existing § 3174.4(d) and § 3174.13. Since these proposed requirements would apply to both oil and gas operations, they belong in proposed subpart 3170, which contains provisions that are common to multiple part 3170 subparts.

The purpose of proposed § 3170.30 is to allow the BLM to approve new measurement equipment and procedures not already approved for use in the regulations. The proposed section would require an operator or manufacturer requesting approval to submit appropriate data demonstrating that the proposed alternative equipment or measurement method/procedure meets or exceeds the performance standards, would not affect royalty income, production accountability, or site security. The BLM is proposing that the PMT would review operators' or manufacturers' requests for approval of alternative equipment or measurement methods/procedures to ensure that the alternative equipment or measurement methods/procedures would meet or exceed the objectives of the applicable minimum standards of part 3170 and would not affect royalty income, production accountability, or site security. After reviewing the requests, the PMT would make recommendations to BLM management, including any suggested conditions of approval. After BLM approval, the PMT would post the make, model, range or software version (as applicable), or method/procedure on the BLM's website, making it available for use at all FMPs.

Proposed § 3170.30(c) would clarify that the procedures for requesting and granting a variance under § 3170.40 of this subpart may not be used as an avenue for approving new measurement technology, methods, or equipment.

Section 3170.40 Variances

Under this proposed rule, existing § 3170.6 would be renumbered to § 3170.40. Both § 3170.6 and § 3170.40 provide instructions on how an operator could electronically submit a request for a variance or, if electronic filing is not possible or practical, submit the request to a BLM field office. Proposed § 3170.40 would revise the existing language to match language in proposed § 3173.43(b) (existing § 3173.10(b)), which instructs operators on how to submit Sundry Notices. This change would create a uniform process for submitting variance requests, FMP number requests, site facility diagrams, and other requests for approval.

The BLM requests comment on whether it should also include a State and tribal variance provision that would allow States and tribes to request that the BLM apply analogous State or tribal rules or regulations in place of the BLM's requirements. The BLM is interested in achieving administrative efficiencies where possible while also protecting the public and tribal interests in production accountability and royalty revenues. The BLM specifically requests comment on the following: The appropriate standard for granting a State or tribal variance; the scope of a State or tribal variance; the appropriate process for obtaining a State or tribal variance; and, the means by which the BLM could address changes to State or tribal rules or regulations on which a variance is based. The BLM notes that its regulations in 43 CFR subpart 3179 previously contained a State and tribal variance provision at § 3179.401 (see 81 FR 83008 (Nov. 18, 2016)). Although that provision has since been rescinded (see 83 FR 49184 (Sept. 28, 2018)), the BLM requests comment on the extent to which former § 3179.401 could serve as a model for a new State and tribal variance provision.

Section 3170.50 Required Recordkeeping, Records Retention, and Records Submission

Proposed § 3170.50(g) would require operators to include the ''Land description'' on all records used to determine the quality, quantity, disposition, and verification of production from Federal or Indian leases, unit PAs, or CAs. Land description includes the quarter-quarter section, section, township, range and principal meridian, or other authorized survey designation acceptable to the AO, such as metes-and-bounds, or latitude and longitude. A land description is needed in case there are errors in other areas of a record. For example, when an operator mistakenly enters the wrong Federal agreement number, the BLM uses other information in the record to determine which Federal agreement is the correct one. The land description can be an important source of information to confirm or refute the validity of a record when the record contains missing or erroneous information. Proposed § 3170.50(g)(4) would also add ''Land description'' to the record-information requirement for facilities existing prior to the assignment of an FMP number. The need for the land description on records for facilities without an FMP number is the same for facilities with assigned FMP numbers.

2. Section-by-Section Discussion for Changes to Subpart 3173

This proposed rule would renumber all of the sections and rename one section in the existing subpart 3173 in order to improve consistency among the various part 3170 regulations. The following table provides a cross-walk comparison of proposed subpart 3173 to existing subpart 3173:

Existing subpart 3173 sec.	Proposed subpart 3173 sec.
3173.1 Definitions and acronyms	3173.10 Definitions and acronyms.
3173.2 Storage and sales facilities—seals	3173.20 Storage and sales facilities—seals.
3173.3 Oil measurement system components—seals	3173.21 Oil measurement system components—seals.
3173.4 Federal seals	3173.22 Federal seals.
3173.5 Removing production from tanks for sale and transportation by truck.	3173.30 Removing production from tanks for sale and transportation by truck.
3173.6 Water-draining operations	3173.31 Water-draining operations.
3173.7 Hot oiling, clean-up, and completion operations	3173.32 Hot oiling, clean-up, and completion operations.
3173.8 Report of theft or mishandling of production	3173.40 Report of theft or mishandling of production.
3173.9 Required recordkeeping for inventory and seal records	3173.41 Required recordkeeping for inventory and seal records.
3173.10 Form 3160–5, Sundry Notices and Reports on Wells	3173.43 Data submission and notification requirements.
3173.11 Site facility diagram	3173.50 Site facility diagram.
3173.12 Applying for a facility measurement point	3173.60 Applying for a facility measurement point number.
3173.13 Requirements for approved facility measurement points	3173.61 Requirements for approved facility measurement point numbers.
3173.14 Conditions for commingling and allocation approval (surface and downhole).	3173.70 Conditions for commingling and allocation approval (surface and downhole).
3173.15 Applying for a commingling and allocation approval	3173.71 Applying for a commingling and allocation approval.
3173.16 Existing commingling and allocation approvals	3173.72 Existing commingling and allocation approvals.
3173.17 Relationship of a commingling and allocation approval to royalty-free use of production.	3173.73 Relationship of a commingling and allocation approval to royalty-free use of production.
3173.18 Modification of a commingling and allocation approval	3173.74 Modification of a commingling and allocation approval.
3173.19 Effective date of a commingling and allocation approval	3173.75 Effective date of a commingling and allocation approval.
3173.20 Terminating a commingling and allocation approval	3173.76 Terminating a commingling and allocation approval.
3173.21 Combining production downhole in certain circumstances	3173.80 Combining production downhole in certain circumstances.
3173.22 Requirements for off-lease measurement	3173.90 Requirements for off-lease measurement.
3173.23 Applying for off-lease measurement	3173.91 Applying for off-lease measurement.
3173.24 Effective date of an off-lease measurement approval	3173.92 Effective date of an off-lease measurement approval.
3173.25 Existing approved off-lease measurement	3173.93 Existing approved off-lease measurement.
3173.26 Relationship of off-lease measurement approval to royalty-free use of production.	3173.94 Relationship of off-lease measurement approval to royalty-free use of production.
3173.27 Termination of off-lease measurement approval	3173.95 Termination of off-lease measurement approval.
3173.28 Instances not constituting off-lease measurement, for which no approval is required.	3173.96 Instances not constituting off-lease measurement, for which no approval is required.
3173.29 Immediate assessments for certain violations	3173.190 Immediate assessments for certain violations.

If a provision is not specifically discussed in this section-by-section analysis, then the provision is essentially the same as the existing regulation.

Section 3173.10 Definitions and Acronyms

This proposed section would clarify the definition of ''Appropriate valves'' by simplifying the language to say that such valves provide access to production (*i.e.,* access to add or remove liquids from a tank or piping system) before it is measured for sale. It would further clarify that such valves would be subject to the proposed rule's sealing requirements at proposed § 3170.20. This new definition would help BLM inspectors identify which valves are subject to the seal requirements and help operators comply with the regulation.

This proposed section would include a new definition for ''Completed.'' The term is used in proposed § 3173.80. The proposed changes in § 3173.80 are discussed later in this preamble.

The proposed rule would significantly change the definition for ''Economically marginal property.'' The existing regulation provides conditions under which a lease, unit PA, or CA may be defined as an economically marginal property. The existing regulation requires each lease, unit PA, or CA in a commingling application to meet one of the definitions of economically marginal property in order for the BLM to consider approving a request to commingle Federal or Indian production.

The existing regulation lists three economic conditions under which a property may be considered economically marginal. The first economic condition is when revenue from production is so low that a prudent operator would elect to plug a well or shut-in a lease rather than invest resources to achieve non-commingled production. The second economic condition is when the expected revenue, net any associated operating costs, generated from oil or gas production is insufficient to cover the nominal cost of the capital expenditure required to achieve measurement of non-commingled oil or gas production over a payout period of 18 months. The third economic condition occurs when the net present value, or the discounted value of the royalties collected from production for the Federal or Indian leases, unit PAs, or CAs over the expected life of the equipment required to achieve non-commingled production, is less than the capital expense of purchasing and installing this equipment.

This proposed rule would eliminate the first condition for an economically marginal property. Upon review, the BLM believes the first and third conditions in the existing rule are essentially the same. The BLM proposes to change the existing second and third economic conditions to state that the capital expense would be based on the least expensive, practicable, alternative equipment required to achieve non-commingled measurement of production. This change would clarify for industry and the BLM the equipment that would be included in an economic analysis for identifying an economically marginal property. The proposed rule would retain the last sentence of the existing definition with only minor administrative changes.

As discussed earlier in this preamble, the proposed rule would remove the definition of ''Land description'' from its current location in existing § 3173.1 and relocate it to proposed § 3170.10.

The proposed rule would move the revised definition for ''Permanent

measurement facility'' from § 3173.1 to § 3170.10. The revised definition for ''Permanent measurement facility'' is discussed previously.

The proposed rule would add a definition for the ''Propagation of uncertainty'' made necessary by the addition of a new condition for commingling in proposed § 3173.70(b)(5).

Section 3173.20 Storage and Sales Facilities—Seals

The proposed rule would clarify the requirement in § 3173.20(c)(2) that seals are not required on valves on water tanks, unless the valve could provide access to sales or storage tanks by water tank and oil tank by means of common piping. The BLM is proposing to add a diagram to Appendix A, subpart 3173, that would depict a common tank configuration and which valves in this configuration are appropriate valves, requiring seals, and which are not. The diagram is intended to address confusion over whether valves on water tanks that have the possibility of accessing oil are appropriate valves that must be sealed.

Section 3173.21 Oil Measurement System Components—Seals

This section addresses requirements for sealing components used in LACT meters and Coriolis measurement systems (CMS). This section identifies the components that must be effectively sealed, as defined in § 3173.10. The objective of this section is to eliminate the theft or mishandling that can occur when components that are used in determining the quantity or quality of oil are not properly sealed.

Upon reviewing existing § 3173.3, the BLM believes that some of the existing sealing requirements are excessive, while others are necessary, but are unclear and in need of revision. The proposed rule seeks to reduce the compliance burden on operators as well as the enforcement burden on the BLM. The BLM reviewed all oil measurement system components, eliminated seal requirements on those with minimal risk to site security, and revised the remaining requirements to provide clarity.

Proposed § 3173.21(a) would change the sealing requirements for the components on LACT meters and CMSs that are currently contained in existing § 3173.3(a)(1), (a)(4), (a)(5), (a)(6), (a)(7), (a)(8), (a)(9), (a)(10), (a)(12), and (a)(13).

Proposed § 3173.21would eliminate seal requirements for the following seals on LACT meters and CMSs:

§ 3173.3(a)(1) Sample probes;
§ 3173.3(a)(6) LACT meters or CMS;
§ 3173.3(a)(9) Manual-sampling valves (if so equipped)'
§ 3173.3(a)(10) Valves on diverter lines larger than 1 inch in nominal diameter;
§ 3173.3(a)(12) Totalizer; and
§ 3173.3(a)(13) Prover connections.

For each of these components, the BLM believes the burden of compliance outweighs the risk of the removal of unmeasured oil. The BLM requests comment on the assumptions made in the following proposals in this section.

Existing § 3173.3(a)(1), requiring a seal for sample probes on LACTs or CMSs, would be eliminated in proposed § 3173.21(a). Sample probe seal requirements would be removed because a sample probe is difficult to remove in normal operations. Since a sample probe is difficult to remove in normal operations, it poses a low risk to measurement if the current requirement for a seal is removed. If a sample probe were removed, its removal would cause a noticeable pressure drop. This pressure drop is likely to be noted on a flow computer, thereby alerting the operator or the BLM to a change in flow conditions in the measurement system.

Existing § 3173.3(a)(6), requiring a seal for LACT meters or CMS, would be eliminated in proposed § 3173.21(a). The existing regulation requires the sealing of LACT meters or CMS. Electronic meters cannot be opened and adjusted in the same way as a mechanical meter. New facilities with larger production volumes are generally using electronic meters for FMPs. Given the construction of electronic meters, it is impossible to seal components which affect the measurement of quality and quantity of oil because the components reside within the housing of the meter. Removal of the seal requirement for electronic meters on newer, higher-producing agreements poses low risk for improper measurement. Mechanical meters are more likely to be used on lower-production FMPs. The BLM believes the elimination of a seal requirement on these meters would not significantly affect production accountability, as higher-volume production facilities are safeguarded with the use of electronic meters.

Existing § 3173.3(a)(9), requiring a seal for manual sample valves, would be eliminated in proposed § 3173.21(a). The proposed rule would remove this requirement because most manual sample valves are less than 1-inch nominal size. Historically, the BLM has used the 1-inch nominal size to delineate the size beyond which the removal of product from a production facility without measurement becomes easier. For example, proposed § 3173.20(c)(4) designates a sample cock valve on piping or tanks of less than 1-inch nominal size as not an appropriate valve subject to sealing requirements. The proposed change provides consistency with the designation of what is not an appropriate valve in the proposed § 3173.20(c) and the proposed sealing requirements on oil measurement systems in proposed § 3173.21(a)(6). The BLM believes manual sample valves in a production facility are unlikely to provide easy access for the removal of oil that has not been measured for royalty purposes.

Existing § 3173.3(a)(10), requiring a seal for valves on divert lines larger than 1 inch in diameter, would be eliminated in proposed § 3173.21(a). Generally, production sent to a divert line does not meet sales quality specifications and would not be measured for production reporting for royalty purposes. Higher-volume facilities use electronic metering systems and operators may have the Programmable Logic Controller configured to show a load rejection in the event log. The event log record would allow BLM inspectors as well as operators, to account for diverted production and control loss risk on higher-volume properties. Removal of the requirement for a seal for valves on divert lines poses a low risk for theft and mishandling and continues to insure proper measurement of oil on which royalty is due.

Existing § 3173.3(a)(12), requiring a seal for the totalizer, would be eliminated in proposed § 3173.21(a). The BLM recognizes the sealing of an electronic meter totalizer is impractical. A seal on a mechanical meter counter head and mechanical meter head will be required in proposed § 3173.21(a)(3). The proposed rule eliminates the impractical requirement for electronic meters and includes the practical seal requirement on mechanical meters in proposed § 3173.21(a)(3). The removal of the requirement for a seal on a totalizer of an electronic meter has a low risk of theft or mishandling of production while still maintaining accurate measurement at the FMP.

Existing § 3173.3(a)(13), requiring a seal for proving connections, would be eliminated in proposed § 3173.3(a). The removal of the requirement to seal proving connections would restore the standard in Onshore Order No. 3, which had no seal requirement for proving connections. Mishandling or theft downstream of an FMP where these seals are located would not affect royalty revenues because royalties would be assessed on volumes measured at the FMP. After further consideration, the BLM has determined that the concern for sealing the proving

valves to prevent falsification of meter proving reports is unwarranted because a BLM inspector would easily detect a proving report that has only a changed date or looks exactly like previous proving reports. Therefore, the BLM would remove this requirement in the proposed rule.

Proposed § 3173.21(a)(3) would modify the meter-assembly sealing requirements now found in existing § 3173.3(a)(4). The existing regulation requires a meter assembly, including the counter head and meter head, to be sealed. The proposed new language would require operators to seal the mechanical counter head (totalizer) and meter head on a mechanical meter only. The existing regulation created confusion with respect to the sealing requirements on a non-mechanical or electronic meter. There is no practical way to seal these components on an electronic meter. This change would clarify that the sealing requirement applies to mechanical meters, and not to non-mechanical meters that are used for measurement.

Proposed § 3173.21(a)(4) would modify the seal requirement for a temperature averager, now found in existing § 3173.3(a)(5). The revised language would no longer refer to a seal requirement for a temperature averager, but instead to a seal requirement for a stand-alone temperature averager monitor. This proposed revision would eliminate any confusion over built-in temperature averagers, which are impossible to seal. The change in the proposed rule maintains the same level of risk for mismeasurement as the current rule and will continue to provide for accurate measurement.

Proposed § 3173.21(a)(5) would revise the sealing requirement for a back-pressure valve downstream of the meter, now found in existing § 3173.3(a)(7). The proposed new language would clarify that the seal requirement would apply only to fixed, non-automatic adjusting, back-pressure valves downstream of the meter. The result would be that operators could use automatic-adjusting back-pressure valves as intended, without having to modify the equipment in order to add seals to valves that adjust automatically based on operating conditions. A seal is used to maintain a fixed operating condition. Automatic-adjusting, back-pressure valves downstream of the meter vary with operating conditions. Sealing a piece of equipment designed to adjust to operating conditions does not make sense. This change is likely to improve measurement at locations with automatic-adjusting back-pressure valves downstream of the meter and maintain the same level of measurement accuracy at locations with fixed or non-automatic adjusting back-pressure valves downstream of the meter.

Proposed § 3173.21(a)(6) would clarify the sealing requirement for drain valves, now found in existing § 3173.3(a)(8). The new language would clarify that the requirement would apply to drain valves used on piping with a nominal pipe size of 1 inch or larger. The existing language applies to any drain valve in the system. This change would eliminate the need for operators to seal most drain valves on sample pots on LACT units. The BLM believes that the proposed requirement would adequately addresses security concerns regarding access to production without accountability and provide clarity for industry compliance and BLM inspection. The proposed change maintains a low risk for improper measurement, theft, or mishandling of production.

Section 3173.31 Water-Draining Operations

Existing § 3173.6 requires operators to document specific information when draining water from production storage tanks. The existing regulation requires the operator, purchaser, or transporter, as appropriate, to document information as specified in existing § 3173.6(a) through (h) when water is drained from a tank storing hydrocarbons.

This proposed rule would eliminate the specific requirements in § 3173.6(a) through (h) and instead defer to the seal-record requirements in proposed § 3173.41(b), which are currently in existing § 3173.9(b). In the current rule, the operator was not required to submit the required information to the BLM via Sundry Notice. Operators have only been required to maintain a record of the information. This proposed change in documentation during water-draining operations would not negate an operator's obligation to report produced water to ONRR on the Oil and Gas Operations Report (OGOR) Part A. The proposed change would, however, eliminate unnecessary burdens on operators by reducing the existing records requirements of Federal or Indian agreement number, land description of tank location, unique tank number and nominal capacity, date of the opening gauge, opening gauge, total observed volume and free water measurement, closing gauge and total observed volume to those maintained in a seal record. After review, the BLM believes the existing documentation requirements add minimal value to production accountability and is information available through internal records for water disposal. The proposed revision would require the operator, purchaser, or transporter, as appropriate, to maintain all seal records and make them available to the BLM upon request.

Section 3173.43 Data Submission and Notification Requirements

The proposed rule would make only minor changes to existing § 3173.10. In addition to renumbering the section, the proposed rule would change the section heading from ''Form 3160–5 Sundry Notices'' to ''Data submission and notification requirements.'' The proposed rule would also update regulatory cross references in paragraphs (a)(1) through (a)(7).

Section 3173.50 Site Facility Diagram

Proposed § 3173.50 would revise and renumber existing § 3173.11, which sets out the requirements for site facility diagrams.

Proposed § 3173.50(c)(3) would require operators to use the complete US well number on the site facility diagrams when identifying wells flowing into headers, instead of the API well number, as explained in the previous discussion on proposed § 3170.10. The complete US well number provides the most accurate unique well identification, including completion and sidetrack information. For BLM inspectors, the US well number provides a unique well identifier, critical for their production facility inspections when Federal or Indian wells are co-located with non-Federal or non-Indian wells. Created by the PPDM Association in 2010, the US well number is the new industry standard for identifying oil and gas wells.

Proposed § 3173.50(c)(4) would correct an editing error in existing § 3173.11(c)(4) regarding how an operator should depict a co-located facility on its site-facility diagram. The proposed change would require the operator of a co-located facility to identify the co-operator by name on the site facility diagram and identify with a box on the diagram the approximate location of the co-located facility. The BLM acknowledges that an operator of a Federal or Indian lease, unit PA, or CA is not responsible for another operator's co-located facility. However, a BLM inspector would need to understand the extent of the operator's responsibilities at a site with co-located facilities. The proposed change would reduce the burden on operators of Federal or trust minerals, acknowledge the limits of the operator's responsibility, and allow

BLM inspectors to conduct appropriate facility inspections.

Proposed § 3173.50(c)(6) would remove the requirement in existing § 3173.11(c)(6) for an operator of a co-located production facility to include on the site facility diagram a skeleton diagram of the other operator's co-located facility(ies). The proposed rule would maintain the existing requirement, in the second sentence of existing § 3173.11(c)(6), for one diagram in the case of storage facilities common to co-located facilities and operated by one operator. The proposed change would acknowledge the extent of an operator's responsibility on Federal or Indian leases, unit PAs, or CAs and reduce the burden and difficulty of creating diagrams for another operator's facilities. With the proposed change, BLM inspectors would continue to complete appropriate facility inspections effectively.

Proposed § 3173.50(c)(8) would give operators options, in addition to using the assigned FMP number, for identifying the measurement equipment used for royalty reporting on-site facility diagrams. The proposed change would also eliminate the requirement that operators wait to receive an FMP number before submitting amended or new diagrams. The proposed revision gives the operator greater flexibility when filling out the site facility diagram and allows for the timely submission of both new and amended diagrams where an FMP number has not yet been assigned. BLM inspectors would be able to conduct facility inspections whether the operator provides the BLM-assigned FMP number, the unique identifiers, or station identification (ID) numbers for the measurement equipment on its diagram.

Proposed § 3173.50(d)(1) would revise the timeframe in existing § 3173.11(d)(1) for when an operator would have to submit a new, permanent site-facility diagram. The time frame would be changed from 30 days after the BLM assigns an FMP to 60 days after the facility becomes operational. In addition, proposed § 3173.50(d)(2) would change the timeframe in existing § 3173.11(d)(2) for when an operator would have to submit an amended site facility diagram for a modified, existing facility. That time frame would be changed from 30 days to 60 days after the facility is modified. The proposed 60-day timeframe would also apply when a non-Federal facility located on a Federal lease or a federally approved unit or communitized area is constructed or modified. The BLM is proposing this change because many site-facility diagrams are not prepared ''in-house'' and the 30-day deadline is difficult for operators to meet. This proposed change would retain the new operator's responsibility to submit amended site facility diagrams when the facility is modified in any way. The BLM believes extending the timeframe for submission of site facility diagrams on new, permanent facilities and modified, existing facilities from 30 days to 60 days would not interfere with the BLM's responsibility for facility inspections.

Proposed § 3173.50 eliminates the requirement (in existing 3173.11(e)) to submit a site facility diagram for a location for which an FMP is not required. The BLM believes the existing requirement is covered by the requirement in proposed § 3173.50(a) and so the deletion of existing 3173.11(e)(1) and (e)(2) removes a regulatory redundancy. Under § 3173.50(a), operators would still be required to submit a site facility diagram for a location not requiring an FMP number.

Proposed § 3173.50(e) is a new section that would change the timeframe in existing § 3173.11(f) for when an operator must update and amend a diagram. The proposed rule would give operators 60 days, instead of the current 30 days, to update and amend a diagram after a facility is modified or a non-Federal facility located on a Federal lease or federally approved unit or communitized area is constructed or modified. The BLM supports this change because many site-facility diagrams are not prepared ''in-house'' and the 30-day deadline is difficult for operators to meet. The proposed change would also delete the requirement to submit a modified site-facility diagram when there is a change of operator and the only change to the diagram would be the new operator's name. The BLM estimates the operator burden to prepare a new site facility diagram to be 4 hours of operator staff time at $65.40 per hour for a total of $262.40 to prepare a new site facility diagram. The BLM believes the proposed changes will lessen the burden and cost on operators to comply with the regulations, while continuing to allow the BLM to ensure production accountability.

Section 3173.60 Applying for a Facility Measurement Point Number

Proposed § 3173.60 would revise the existing requirements for the FMP-number application process that are now located in existing § 3173.12.

The proposed rule would change the section title slightly from ''Applying for a facility measurement point'' to ''Applying for a facility measurement point number.'' This change would more accurately reflect the process of applying for and receiving an FMP number as opposed to applying for an FMP, which already exists as the point of royalty measurement even before the BLM issues an FMP number for it. The BLM proposes to delete existing §§ 3173.12(a)(1), (a)(2), and (b) because these sections essentially define FMP, off-lease measurement, and commingling. Proposed § 3170.10 already defines these terms. The proposed regulation would seek to make the distinction between an FMP—the point where oil or gas produced from a Federal or Indian lease, unit PA, or CA is measured, and where the measurement affects the calculation of the volume or quality of production on which royalty or injection and withdrawal fees are owed—and the FMP number. An FMP exists whether or not the BLM has assigned an FMP number. The proposed change would keep the definition of an FMP separate from the application for an FMP number and prevent confusion. In order to accommodate this change, the word ''number'' would be inserted after the word ''FMP'' throughout the revised section. Proposed § 3173.60(a) would add reference to gas storage agreement involving native gas or oil to the requirement of applying for an FMP number. This change would be necessary to address the changes proposed to the FMP definition.

Proposed §§ 3173.60(c)(1), (c)(2), and (c)(3) would change the tiers in existing § 3173.12(e) that dictate the timeframes under which operators of permanent existing facilities would be required to apply for FMP numbers. Each tier is grouped by monthly production amounts with assigned compliance dates that would fall either 1, 2, or 3 years after the effective date of the final rule. The tiers in existing §§ 3173.12(c)(1), (c)(2), and (c)(3) were derived from 2010 production data that was available when the existing regulations were written. The proposed rule seeks to replace the existing tiers with tiers derived from 2017 production data. The revised tiers better reflect the current operating environment by dividing the 2017 production data into equal thirds creating the new tiers. The proposed tier change would keep the application submissions by year split into thirds, reducing the burden on the BLM to process the influx of applications for existing locations when this section of the regulation goes into effect.

Proposed § 3173.60(c) would also delete the enforcement language in existing § 3173.12(e)(7). Subpart 3163

provides standalone authority for an Incident of Noncompliance (INC) and civil penalties for noncompliance with this part. In addition, proposed § 3170.70 provides further assurance the subpart 3163 enforcement mechanisms can be used to enforce the part 3170 requirements. Given the enforcement authority in other parts of the BLM's regulations, the BLM is proposing to delete this language without affecting the BLM's enforcement capacity.

Proposed § 3173.60(d) would list the information that the operator must include in its Sundry Notice requesting approval of an FMP number. These requirements are now found in existing § 3173.12(f). Existing § 3173.12(f)(2) requires the applicant to provide the applicable Measurement Type Code. The proposed rule would remove this requirement, since the Measurement Type Code will be generated automatically by the Automated Fluid Minerals Support System (AFMSS) 2 currently in development. In AFMSS 2, the FMP-number applicant will answer a series of questions on the FMP Sundry Notice. Based on the information submitted, AFMSS 2 will generate the FMP number. The first two digits of the FMP number will be the Measurement Type Code identifier. The BLM believes the AFMSS 2 application process negates the need for operators to provide the Measurement Type Code as required in existing § 3173.12(f)(2).

Proposed § 3173.60(d)(2)(i) through (iii) would revise the information that operators are now required to provide in their FMP applications about the equipment used for oil and gas measurement under existing § 3173.12(f)(3)(i) through (iii).

The BLM believes the proposed changes in § 3173.60(d)(2)(i), (ii), and (iii) would provide for consistent FMP-number-application-information requirements for gas measurement, oil measurement by tank gauge, and oil measurement by LACT or CMS. The proposed changes would also prevent operators from having to submit unnecessary information during the FMP number application process or information they are already required to provide elsewhere in the regulation.

Proposed § 3173.60(d)(2)(i) would change the information required under existing § 3173.12(f)(3)(i) on FMP number applications for gas measurement. The BLM is proposing to remove the requirement that operators list the ''station number, primary element (meter tube) size or serial number, and type of secondary device (mechanical or electronic)'' and replace it with a requirement that operators provide ''the unique meter ID, and elevation.'' The revised paragraph would still require gas-measurement FMP applicants to list the operator, purchaser, or transporter's name, as appropriate. This change would eliminate confusion as to what is required to identify the primary element, remove non-relevant information such as the type of secondary device, and include the elevation. The BLM believes the revised requirement would provide the information the BLM needs for production accountability and verification.

Under proposed § 3173.60(d)(2)(ii), the equipment information required under existing § 3173.12(f)(3)(ii) would remain the same for those applying for FMP numbers to measure oil by tank gauge. The only change would be that applicants would be required to specify the name of the operator, purchaser, or transporter, as appropriate. The additional information would make the new paragraph consistent with the information required for gas measurement and oil measurement by LACT or CMS in proposed § 3173.60(d)(2)(i) and (iii).

Proposed § 3173.60(d)(2)(iii) would change the information requirements under existing § 3173.12(f)(3)(iii) on FMP number applications for measuring oil by LACT or CMS. Purchasers, transporters, or parties other than the operator frequently operate the LACTs and CMS systems. The proposed change would require the operator to identify the purchaser or transporter, as appropriate, and the unique meter ID. The proposed change would also delete the requirement to identify whether the equipment is LACT or CMS, the associated oil tank number or serial number, and tank size. Much of the information required in existing § 3173.12(f)(3)(iii) is currently required on a site facility diagram. The proposed change would better serve the BLM with information connected to the associated record keeping requirements of the FMP, while reducing the burden on the operator.

Proposed § 3173.60(d)(3) would replace the reference to API number in existing § 3173.12(f)(4) with US well number. The proposed change would make the regulation consistent with the current industry standard for a unique well identifier.

Section 3173.61 Requirements for Approved Facility Measurement Points

Proposed § 3173.61 would revise the requirements in existing § 3173.13 that specify when operators must start using their FMP numbers on production reporting to ONRR and when they must notify the BLM of any permanent changes made to an FMP.

Proposed § 3173.61(a) would require all existing and new facilities to start using their FMP numbers when reporting production to ONRR starting with the third production month after the BLM assigns the FMP number(s). This would be a change from existing § 3173.13(a), which makes a distinction between existing facilities that are in operation 60 days on or before January 17, 2017, and new facilities that are in service 60 days after January 17, 2017. The existing rule requires existing facilities to begin using the FMP number for reporting production to ONRR on the OGOR starting with the fourth production month after the BLM assigns the number and new facilities to begin using the number starting with the first production month after the BLM assigns the number.

The proposed change would eliminate the burden on operators and the BLM to identify whether a facility is an existing or new facility based on the existing rule's publication date. The requirement for using an FMP number when reporting production to ONRR on OGORs would be tied only to the BLM's assignment of the FMP number. The BLM believes this change would eliminate confusion that has developed under the existing regulations due to delays with the development of AFMSS 2—the system that will be used to assign FMP numbers.

Proposed § 3173.61(b)(1) would not change from existing § 3173.13(b)(1). This paragraph would require operators to file a Sundry Notice within 30 days describing any permanent changes or modifications made to an FMP, including any changes to the information on an application submitted under proposed § 3173.60.

Proposed § 3173.61 would delete existing § 3173.13(b)(2) requiring the operator to include details, such as the primary element, secondary element, LACT/CMS meter, tank number(s), and wells or facilities when describing any changes or modifications made to an FMP under existing § 3173.13(b)(1). The BLM believes the existing requirement is redundant and adequately covered under proposed § 3173.61(b)(1), which states in part, ''These include any changes and modifications to the information listed on an application submitted under § 3173.60.'' The information required for applying for an FMP number would be sufficient to inform the BLM of an FMP modification. The existing regulation requires information in excess of that required on an initial FMP number application. The BLM believes the

deletion improves understanding of requirements and eliminates a redundancy.

Section 3173.70 Conditions for Commingling and Allocation Approval (Surface and Downhole)

Proposed § 3173.70 would revise the existing requirements for commingling and allocation approval that are now located in existing § 3173.14.

The BLM believes that commingling of production reduces the environmental footprint of oil and gas facilities and operators' capital expenditures. However, when considering an application for commingling of production, the BLM has an obligation to ensure the accuracy of measurement, the ability to verify reported production volumes, and the ability to audit reported production volumes going back 7 years on Federal minerals and 6 years on Indian trust minerals, as required by law. Based on in-house modeling using Monte Carlo simulation of produced volumes from multiple Federal interest percentages—as well as referencing a paper presented by Phillip Stockton, ''Cost Benefit Analyses in the Design of Allocation Systems,'' at the 27th International North Sea Flow Measurement Workshop in 2009 [2]—the BLM is concerned about uncertainty of measurement in commonly used test allocation methods. Many commingling applications the BLM receives present an allocation scheme based on well tests or a single Federal or Indian agreement test containing multiple wells. In a test allocation method, production from a well or agreement is directed to a test separator and tank for a test period varying from hours to days. Production measured during this test period is used to calculate the proportionate production attributable to the well or agreement from the total commingled production for a reporting month. Typical test allocation methods have a higher overall uncertainty of measurement than measurement performance goals for FMPs in proposed § 3174.31 and § 3175.31. From modeling, the BLM believes the uncertainty of measurement in allocation methods is more of a concern when the Federal or Indian mineral interests in the agreements proposed for commingling are dissimilar. As the disparity in Federal or Indian mineral interest in the agreements proposed for commingling increases, the overall uncertainty of measurement increases. The BLM would like to ensure there is no greater uncertainty in measurement in commingling and allocation methods than in non-commingled production. With the changes proposed in this section, the BLM would expand its ability to approve commingling of production while preserving measurement performance.

Proposed § 3173.70(a)(1)(i) and (a)(1)(iii) would rescind the requirement for the same revenue and royalty distribution that was initially required in IM 2013–152, Attachment 2–1 Royalty Distribution, and subsequently included in existing § 3173.14(a)(1)(i) and (a)(1)(iii). In practice, the BLM has discovered that it is difficult for BLM engineers to determine the revenue and royalty distribution based on the Federal lease type while reviewing applications for commingling. The BLM would be willing to forego this requirement given the difficulty in implementing it and the low risk that the BLM would approve commingling of Federal leases that have significantly diverse revenue and royalty distribution.

Proposed § 3173.70(a)(2) would remove the parenthetical requirement that an operator include an allocation method for produced water in its commingling application. The BLM's focus is on produced oil and gas on which there is a royalty obligation. If an approved commingling operation experiences an upset that results in significant oil in its water tanks, the operator would be required to account for the oil in the water tank based on the approved allocation method of oil production. The BLM believes the proposed change would eliminate an unnecessary requirement for commingling allocation approval and reduce the regulatory burden on operators and the BLM.

Proposed § 3173.70(a)(3) would change existing § 3173.14(a)(3) to allow a lease, unit PA, or CA to be included in a proposed Commingling and Allocation Approval (CAA) if it has an approved Application for Permit to Drill (APD), but no production at the time of the application. Under existing § 3173.14(a)(3), only leases, unit PAs, or CAs producing in paying quantities or, in the case of Federal leases, capable of producing in paying quantities, may be included in a proposed CAA. The proposed change would allow operators to apply for commingling approval before drilling wells, based on production volume projections, supported by offset-well decline curve data, presented in the commingling application in proposed § 3173.71(j). The BLM recognizes that operators base their drilling and production-facility economics on projected production volumes and regularly design new-well facilities based on offset-well information. The BLM believes the proposed change in requirements for commingling and allocation approval would allow operators to plan more efficiently while limiting the BLM's measurement accountability risk. In addition, proposed § 3173.76—which is discussed later in this preamble—includes new provisions for terminating CAAs based on projected oil or gas volumes or oil or gas quality if the actual production exceeds projections (*i.e.,* volumes are higher than projected).

Proposed § 3173.70(b)(2) would increase the existing average monthly production over the preceding 12 months for each Federal or Indian lease, unit PA, or CA proposed for the CAA from less than 1,000 Mcf of gas per month or 100 barrels (bbl) of oil per month to less than 6,000 Mcf of gas per month or 1,000 bbl of oil per month. The existing production volume thresholds were chosen because properties producing below these thresholds would almost always qualify as economically marginal properties as defined in § 3173.10 under the proposed rule and in conditions under which commingling may be approved in proposed § 3173.70(b).

The BLM calculated the existing 100 bbl per month oil threshold based on a cost to achieve non-commingled measurement of production of $50,000 for oil, estimating the cost of setting a single small tank. The production rate required to achieve an 18-month payout of this investment assuming a $60 per bbl oil price, including taxes, royalty payments, and fixed and variable operating costs would be approximately 100 bbl per month. Based on industry input and recent applications received for commingling approval, the BLM believes that the assumed capital expense estimate does not reflect current capital expenditures or construction costs to segregate production. With the advent of horizontal drilling and higher well production, industry claims the total construction cost to build a new facility is between $450,000 and $650,000 per well. The increase in the commingling oil threshold is based on a new estimate of $500,000 to achieve non-commingled measurement of oil production. The production rate required to achieve an 18-month payout of this capital investment, assuming $50 per bbl oil price including taxes, royalty payments, and fixed and variable operating costs

[2] Phillip Stockton, ''Cost Benefit Analyses in the Design of Allocation Systems,'' in *27th International North Sea Flow Measurement Workshop 2009: Tonsberg, Norway, 20–23 October 2009* (Red Hook, NY: Curran, 2010).

would be approximately 1,000 bbl per month of oil.

The BLM used a similar approach for determining the gas threshold of 1,000 Mcf per month in the existing rule. The production rate required to achieve an 18-month payout of this investment assuming a cost to achieve non-commingled gas production of $20,000, a $3 per MMBtu gas price, and including taxes, royalty payments, and operating expenses was approximately 1,000 Mcf per month. Assuming a capital expense of $200,000, the same relative increase as oil, to achieve non-commingled production, a gas price of $3 per MMBtu, and including taxes, royalty payments, and operating expenses, the proposed gas threshold would increase to 6,000 Mcf per month.

Proposed § 3173.70(b)(5) would add a new paragraph with a new condition for commingling and allocation approvals and renumber existing § 3713.14(b)(5) to § 3173.70(b)(6). Proposed § 3713.70(b)(5) would provide operators an opportunity to demonstrate to the BLM an allocation uncertainty based on a propagation of uncertainty method similar to that published in the Guide to the Expression of Uncertainty in Measurement, International Organisation for Standardisation, ISO/IEC Guide 98:1995. The overall allocation uncertainty analysis must: Meet the performance goals in proposed § 3174.31 and proposed § 3175.31; show no allocation bias as a result of commingling allocation; state what the assumed underlying distribution is of the volumes generated in the analysis and support the use of the stated underlying distribution assumption; and be limited to four leases, unit PAs, or CAs proposed for commingling. The BLM proposes to limit the number of leases, unit PAs, or CAs to four based on assumed limitations of spreadsheets typically used in most offices. The BLM is concerned with the inherent risk to the uncertainty of allocation measurement for Federal or Indian trust mineral percentages in a commingling and allocation approval. If the applicant is able to demonstrate no risk to Federal or Indian trust mineral measurement, then the BLM could agree to a commingling and allocation approval. The BLM seeks comments on this proposed new condition for commingling and allocation approval. Specifically, the BLM would request comment from the public on the following:

1. Would the applicant be able to perform the required analysis?

2. Would an applicant use this condition to apply for commingling and allocation approval?

3. Is there a better condition/method for ensuring no risk to measurement of Federal or Indian trust mineral interest and approving commingling and allocation?

Section 3173.71 Applying for a Commingling and Allocation Approval

Proposed § 3173.71 would revise existing requirements for commingling and allocation approval applications that are now located in existing § 3173.15.

Proposed § 3173.71(a) would remove from existing § 3173.15(a) the provision stating that, if the commingling and allocation proposal includes off-lease measurement, a separate Sundry Notice required under existing § 3173.23 is unnecessary as long as the information required under existing § 3173.23(b) through (e) and, where applicable, existing § 3173.23(f) through (i), is included in the request for approval for commingling and allocation. The proposed rule would require a separate Sundry Notice for off-lease measurement approval. The BLM would regard the commingling and allocation approval as a separate decision from the off-lease measurement approval. The BLM believes this would provide clarity for operators and the BLM on processing a commingling and allocation application. The BLM can foresee cases where a commingling and allocation application would be approved, but the off-lease measurement would be denied. The proposed new language would separate a decision on a CAA application from a decision on off-lease measurement. In addition, proposed § 3173.71(a) would require separate Sundry Notices for approval of commingling and allocation of oil or gas. The BLM would like to separate oil CAA applications from gas CAA applications since the economics for each are calculated differently based on the proposed definition of economically marginal property in § 3173.10.

Proposed § 3173.71(b) would change existing § 3173.15(b) to require an operator to submit an off-lease measurement Sundry Notice request under proposed § 3173.91 separately from and simultaneously with the Sundry Notice requesting commingling and allocation approval. The proposed rule would eliminate the ability to apply for off-lease measurement and commingling on the same Sundry Notice. The BLM believes this change would allow for a single decision on a single Sundry Notice. Since the requests for off-lease measurement and commingling and allocation approvals are related, but separate decisions, the operator would submit the Sundry Notices simultaneously.

Proposed § 3173.71(c) would delete the requirement in existing § 3173.15(c) to include the allocation of produced water in a commingling and allocation application. The BLM would eliminate this requirement for the same reasons stated in the earlier discussion of proposed § 3173.70(a)(2).

Proposed § 3173.71(f) would amend the requirement in existing § 3173.15(f) for a surface-use plan of operations if new surface disturbance is proposed for the FMP or associated facilities on BLM-managed land within the boundaries of the leases, units, and communitized areas from which production would be commingled. The proposed rule would require an applicant-certified statement of a surface-use plan of operations if new surface disturbance is proposed in a commingling application on BLM-managed land. By submitting a certified statement, the applicant is presenting a sworn statement that a surface-use plan of operations for the CAA has been prepared pursuant to regulation. If the BLM were to request the surface-use plan of operations, the applicant should be prepared to provide the plan. The proposed change would reduce the application submission and application review burdens while ensuring a surface-use plan of operation has been prepared.

Proposed § 3173.71(g) and § 3173.71(i) would remove the requirement that an operator submit a right-of-way grant with its application for commingling and allocation approval if any of its facilities would be located on Federal or Indian land. Proposed § 3173.15(g) would instead require an operator to provide an applicant-certified statement that it already has a right-of-way grant, approved under 43 CFR part 2880 or approved under 43 CFR part 2800, as applicable, for Federal rights-of-way. Existing § 3173.15(g) and § 3173.15(i) require an operator to submit the grant application as part of its CAA application. Proposed § 3173.71(i) would reduce the requirement to the operator providing an applicant-certified statement that it already has a right-of-way grant, approved under 25 CFR part 169 for rights-of-way over Indian lands. With the submission of a certified statement, the applicant is presenting a sworn statement that a right-of-way grant has been obtained pursuant to the appropriate regulation. Like the proposed change in § 3172.71(f), the change in part (g) would also reduce application submission and review burdens on both industry and the BLM.

Proposed § 3173.71(j) would change the documentation requirements under existing § 3173.15(j) to allow leases that

are not yet producing to be included in an application for a CAA. An operator would have to document that each lease, unit PA, or CA proposed for commingling has an approved APD and has offset-well decline curve data and offset well oil gravity and/or gas Btu content to support the projected production estimates contained in the CAA application. Under existing § 3173.15(j), only leases, unit PAs, or CAs producing in paying quantities or, in the case of Federal leases, capable of producing in paying quantities, may be included in a proposed CAA application. This proposed change under § 3173.71(j) would make it consistent with proposed changes in § 3173.70(a)(3), which would allow commingling and allocation agreements to include properties that are not yet producing. The BLM believes this change would make it easier for operators to apply for and receive commingling approvals.

Proposed § 3173.71(a) would change existing § 3173.15(a) to require that gas CAA applications must be submitted separately from oil CAA applications. Existing § 3173.15(k) requires operators to submit gas analyses, if the CAA request includes gas, and oil gravities, if the CAA request includes oil. The BLM would like to separate gas CAA applications from oil CAA applications, since the economics for each are calculated differently. The BLM's decision to approve a gas CAA is separate from its decision to approve an oil CAA. The proposed language would say that all gas analyses, including Btu content or oil gravities, as applicable, for previous periods of production from the leases, units, unit PAs, or communitized areas proposed for includes in the CAA, for up to 6 years before the date of the application for approval of the CAA. The proposed inclusion of ''as applicable'' is for consistency with the requirement in proposed § 3173.71(a) for separate CAA applications for oil and gas.

Section 3173.72 Existing Commingling and Allocation Approvals

Proposed § 3173.72 would make small changes to the BLM's process, now described in existing § 3173.16, for reviewing existing commingling and allocation approvals.

Proposed § 3173.72(a)(2)(i) would increase the threshold for grandfathered surface commingling from less than 1,000 Mcf of gas per month in existing § 3173.16(a)(2)(i) to less than 6,000 Mcf of gas per month, and from less than 100 bbl of oil per month in existing § 3173.16(a)(2)(ii) to less than 1,000 bbl of oil per month. In the existing rule, the thresholds in § 3173.14(b)(2) and § 3173.16(a)(2) are identical. The proposed regulation maintains identical thresholds for these sections. The increased production thresholds are discussed earlier.

Proposed § 3173.72(d) would add a new provision that would further clarify the grandfathering of existing downhole commingling. During the implementation of the existing regulation, confusion arose as to whether the grandfathering of an existing downhole commingling approval simultaneously granted new surface commingling approval or the grandfathering of an associated surface commingling approval. This new paragraph would further clarify what constitutes a grandfathered downhole commingling approval. The BLM believes the proposed change would clarify the extent of the grandfathering of downhole commingling approvals.

Section 3173.74 Modification of a Commingling and Allocation Approval

Proposed § 3173.74(b) would add another condition to existing § 3173.18 that would require an operator to have the CAA reevaluated by the BLM when actual production exceeds the projected production in the commingling application. The proposed rule would allow the BLM to rescind or revise the approval, or modify its conditions of approval, if the CAA's actual production volumes and quality from any of the leases, unit PAs, or CAs exceed the production projections provided in the CAA application. The inclusion of this provision to reevaluate a CAA based on projected production would provide the BLM with recourse if the operator fails to provide accurate projections in the application for commingling and allocation approval.

Section 3173.76 Terminating a Commingling and Allocation Approval

Proposed § 3173.76(a)(4) would add another reason for the BLM to terminate a commingling and allocation approval. If the CAA's production quantity and quality exceeds the operator's projections in the CAA application, the BLM would retain the authority to terminate the approval. The proposed change provides the BLM with recourse when an operator's actual production no longer supports the commingling approval previously granted.

Section 3173.80 Combining Production Downhole in Certain Circumstances

Proposed § 3173.80 would make a small change to the BLM's requirements for combining production downhole that are now located in existing § 3173.21.

Proposed § 3173.80(a)(1) would change the words in existing § 3173.21(a)(1) from ''drilled into'' to ''completed in.'' The BLM does not believe this change would be substantive and the change in terms would more accurately describe the downhole situation.

Section 3173.91 Applying for Off-Lease Measurement

Proposed § 3173.91 would clarify and simplify the requirements for an off-lease measurement application in existing § 3173.23.

Proposed § 3173.91(a) would add new language that would clarify that operators would be required to submit separate Sundry Notices for applications for off-lease measurement for each oil and gas FMP. Existing § 3173.23(a) requires operators to submit only one Sundry Notice for an off-lease measurement application. The BLM believes a decision for an off-lease measurement approval for a gas FMP is a separate decision from an off-lease measurement approval for an oil FMP. As such, these applications should be submitted on separate Sundry Notices.

Proposed § 3173.91(f) and (g) would require an operator applying for off-lease measurement to submit an applicant-certified statement that it already has a right-of-way grant for a Federal right-of-way under 43 CFR part 2880 or 43 CFR part 2800, as applicable, or a right-of-way grant over Indian land under 25 CFR part 169. Existing § 3173.23(f) and (g) require an operator to submit the grant application as part of its off-lease measurement application. The proposed change would make this section consistent with changes in proposed § 3173.71(g) and (i), which are the proposed application requirements for commingling and allocation approval. The BLM believes this change would reduce regulatory burdens on both applicants and the BLM. The BLM would retain the ability to request the operator provide supporting documentation of the right-of-way grant when needed.

Proposed § 3173.91 would delete existing § 3173.23(j), which requires an operator to submit a statement with its off-lease measurement application that indicates whether the proposal includes all, or only a portion of, the production from the lease, unit, or CA. The BLM believes existing § 3173.23(j) requirement is unnecessary when applications for off-lease measurement are submitted on an FMP basis. Production from all FMPs from any lease, unit PA, or CA are fully

accounted for on the OGORs. The removal of this requirement would reduce operator regulatory burden.

Section 3173.190 Immediate Assessments for Certain Violations

Table 1 to Proposed § 3173.29—Violations Subject to an Immediate Assessment

The proposed rule would change the wording in existing Immediate Assessment 1, which calls for a $1,000 assessment when ''an appropriate valve on an oil storage tank was not sealed, as required by § 3173.2.'' Proposed Immediate Assessment 1 in § 3173.190 would be changed to match the definition in proposed § 3173.10, which would require valves to be ''effectively'' sealed. This change would clarify that the immediate assessment would apply to valves that have a seal but the seal is not effective.

The proposed rule would remove the existing Immediate Assessment 2, which calls for a $1,000 assessment when ''an appropriate valve or component on an oil metering system was not sealed, as required by § 3173.3.'' This proposal is in response to the sheer numbers of seals that are regularly required for the effective sealing of some components of an oil metering system (LACT or CMS), where each missing or ineffective seal is a separate violation and immediate assessment. This would not affect the requirement to effectively seal an appropriate valve or component covered in proposed § 3173.10. Where an operator has systemic and re-occurring violations, the BLM may always take appropriate enforcement action.

3. Section-By-Section Discussion for Changes to Subpart 3174

The proposed rule would renumber all of the sections in existing subpart 3174. The goal of this renumbering is to achieve formatting consistency among the various part 3170 regulations. Each category (*e.g.,* tank storage and tank gauging measurement, LACT measurement, Electronic Liquids Measurement (ELM), CMS, and Proving) has been re-numbered to a series in blocks of 10. The following table provides a cross-walk comparison of proposed subpart 3174 section numbers and their headings with the current subpart 3174 section numbers and headings. New proposed sections are identified by the word ''New'' in the existing subpart 3174 column.

Sec. existing subpart 3174	Sec. proposed subpart 3174
3174.1 Definitions and acronyms	3174.10 Definitions and acronyms.
3174.2 General requirements	3174.20 General requirements.
3174.3 Incorporation by reference (IBR)	3174.30 Incorporation by reference (IBR).
3174.4 Specific performance requirements	3174.31 Specific measurement performance requirements.
New	3174.40 Approved measurement equipment and data requirements.
New	3174.41 Measurement equipment requiring BLM approval.
New	3174.42 Measurement equipment approved by regulation.
New	3174.43 Data submission and notification requirements.
New	3174.50 Grandfathering.
3174.2 General requirements	3174.60 Timeframes for compliance.
3174.2 General requirements	3174.70 Measurement location.
3174.5 Oil measurement by tank gauging—general requirements	3174.80 Oil storage tank equipment.
3174.5 Oil measurement by tank gauging—general requirements	3174.81 Oil measurement by tank gauging.
3174.5 Oil measurement by tank gauging—general requirements	3174.82 Oil tank calibration.
3174.6 Oil measurement by tank gauging—procedures	3174.83 Tank gauging procedures.
3174.6 Oil measurement by tank gauging—procedures	3174.84 Tank oil sampling.
3174.6 Oil measurement by tank gauging—procedures	3174.85 Determining S&W content.
3174.6 Oil measurement by tank gauging—procedures	3174.86 Tank oil temperature determination.
3174.6 Oil measurement by tank gauging—procedures	3174.87 Observed oil gravity determination.
3174.6 Oil measurement by tank gauging—procedures	3174.88 Measuring tank fluid level
3174.7 LACT systems—general requirements	3174.90 LACT systems—general requirements.
3174.8 LACT systems—components and operating requirements	3174.100 LACT systems—components and operating requirements.
New	3174.101 Charging pump and motor.
3174.8 LACT systems—components and operating requirements	3174.102 Sampling and mixing system.
New	3174.103 Air Eliminator.
3174.8 LACT systems—components and operating requirements	3174.104 LACT meter.
3174.8 LACT systems—components and operating requirements	3174.105 Electronic temperature averaging device.
3174.8 LACT systems—components and operating requirements	3174.106 Pressure-indicating device.
New	3174.107 Meter Proving Connections.
3174.8 LACT systems—components and operating requirements	3174.108 Back Pressure and Check Valves.
3174.10 Coriolis meter for LACT and CMS measurement applications—operating requirements.	3174.110 Coriolis meter operating requirements.
3174.10 Coriolis meter for LACT and CMS measurement applications—operating requirements.	3174.120 Electronic liquids measurement, ELM (secondary and tertiary device).
New	3174.121 Measurement data system, MDS.
3174.9 Coriolis measurement systems (CMS)—general requirements and components.	3174.130 Coriolis measurement systems (CMS) — general requirements and components.
New	3174.140 Temporary measurement.
3174.11 Meter-proving requirements	3174.150 Meter-proving requirements.
3174.11 Meter-proving requirements	3174.151 Meter prover.
3174.11 Meter-proving requirements	3174.152 Meter proving runs.
3174.11 Meter-proving requirements	3174.153 Minimum proving frequency.
3174.11 Meter-proving requirements	3174.154 Excessive meter factor deviation.
3174.11 Meter-proving requirements	3174.155 Verification of the temperature transducer.
3174.11 Meter-proving requirements	3174.156 Verification of the pressure transducer (if applicable).
3174.11 Meter-proving requirements	3174.157 Density verification (if applicable).
3174.11 Meter-proving requirements	3174.158 Meter proving reporting requirements.
3174.12 Measurement tickets	3174.160 Measurement tickets.
3174.12 Measurement tickets	3174.161 Tank gauging measurement ticket.

Sec. existing subpart 3174	Sec. proposed subpart 3174
3174.12 Measurement tickets	3174.162 LACT system and CMS measurement ticket or volume statement.
3174.13 Oil measurement by other methods	3174.170 Oil measurement by other methods.
3174.14 Determination of oil volumes by methods other than measurement.	3174.180 Determination of oil volumes by methods other than measurement.
3174.15 Immediate assessments	3174.190 Immediate assessments.

Another goal of this proposed numbering is to reduce the levels of section paragraphs and make it easier to locate and cite to specific requirements. For example, the existing subpart 3174 section that covers tank gauging is § 3174.6. Within this section, under paragraph (b), there are four levels of subparagraphs, which makes discerning the individual requirements of that section unnecessarily complex. The specific provisions that cover the procedure for determining the opening-tank fluid level are currently found at § 3174.6(b)(5)(i)(A) through (E). Under the proposed rule, the regulatory citation for determining the tank fluid level would be § 3174.88(a)(1) through (3). The BLM believes this change would benefit both industry and the BLM by making regulatory requirements more clear.

The following discussion provides a section-by-section explanation of the proposed changes to subpart 3174. If a provision is not specifically discussed in this section-by-section analysis, then the provision is essentially the same as the existing regulation

Section 3174.10 Definitions and Acronyms

This section lists definitions and acronyms that are used in this subpart.

This proposed rule would relocate the definitions for ''Configuration log'' and ''Event log'' in current § 3174.1 to the definitions section for subpart 3170 (§ 3170.10), which defines terms that are used in more than one of the part 3170 subparts.

The definition for ''Base pressure'' in current § 3174.1 would be modified to include the value of gauge pressure at base conditions. This change comes from requests by operators to include gauge pressure in the definition because they utilize gauge pressure units in their data systems, rather than absolute pressure units. By including the addition of the value of gauge pressure at base condition any confusion of whether use of gauge pressure units is acceptable would be removed.

A definition for ''Electronic liquid measurement'' would be added to support a new section that would address emerging hardware and software technologies that are associated with liquids measurement.

Definitions for three new proposed oil FMP categories would be added: ''Very-high-volume FMP,'' ''High-volume FMP,'' and ''Low-volume FMP.'' These definitions are needed to accommodate a new phase-in schedule for the subpart 3174 requirements, a third uncertainty level category for oil measurement, new grandfathering provisions, and specific exemptions from certain requirements. The proposed FMP category volume thresholds are tied primarily to the risk to royalty, based on uncertainty levels and anticipated costs to retrofit the FMPs to achieve these minimum uncertainty levels. The BLM requests comment on the proposed oil FMP categories and their associated measurement performance standards and requirement for BLM-approved equipment.

The proposed rule defines ''Low-volume FMP'' as any FMP that measures 50 bbl. oil/day or less over the averaging period. Low-volume FMPs would have to meet minimum requirement to ensure that measurements are verifiable under proposed § 3174.31(c), but would be exempt from the minimum uncertainty requirements found in proposed § 3174.31(a) and the requirement to achieve measurement without statistically significant bias in proposed § 3174.31(b). Under § 3174.50, low-volume FMPs in service before the effective date of the final rule would be exempt from the BLM-approved equipment requirements of proposed § 3174.41(a) through (i) until the listed equipment is replaced, or production levels at the FMP elevate it to the very-high-volume category. It is anticipated that low-volume FMPs would primarily consist of operations that employ manual tank-gauge measurement and would encompass an estimated 81 percent of the total FMPs, representing about 7 percent of reported production in calendar year 2017. For this category, all equipment and measuring procedures used to measure the volume and quality of oil for royalty purposes would have to comply with the requirements of subpart 3174 within 2 years of the effective date of the final rule.

The proposed rule defines ''High-volume FMP'' as any FMP that measures more than 50 bbl/oil per day, but less than 500 bbl oil/day over the averaging period. Proposed requirements for high-volume FMPs would ensure that measurements have no statistically significant bias, would be verifiable under proposed § 3174.31(b) and (c), and would achieve an overall measurement uncertainty of ±1.50 percent under proposed § 3174.31(a). The BLM believes the production volume threshold would make it economically feasible for operators to retrofit their FMPs to meet the overall uncertainty requirements. It is anticipated that this category would primarily consist of operations that employ manual tank-gauge measurement, automatic tank gauge (ATG), and LACT measurement, and would encompass an estimated 15 percent of the total FMPs, representing approximately 28 percent of reported production in calendar year 2017. Under § 3174.50, high-volume FMPs in service before the effective date of the final rule would be exempt from the BLM-approved equipment requirements of proposed § 3174.41(a) through (i) until the equipment listed in § 3174.41(a) through (i) is replaced, or the production levels at the FMP elevate it to the very-high-volume category. The new equipment would then be required to be BLM-approved equipment. For high-volume FMPs, all equipment and measuring procedures used to measure the volume and quality of oil for royalty purposes would have to comply with the requirements of subpart 3174 within 2 years of the effective date of the final rule.

The proposed rule defines ''Very-high-volume FMP'' as any FMP that measures 500 bbl oil or more over the averaging period. Proposed requirements for high-volume FMPs would ensure that measurements have no statistically significant bias, are verifiable under proposed § 3174.31(b) and (c), and would achieve an overall measurement uncertainty of ±0.50 percent under proposed § 3174.31(a). The BLM believes the production volume threshold would make it economically feasible for operators to retrofit FMPs to meet the overall

uncertainty requirements. It is anticipated this category would primarily consist of operations that employ LACT and CMS measurement and would encompass an estimated 3.8 percent of the total FMPs. This category would have the strictest measurement requirements of the three proposed FMP categories. For this category, all equipment and measuring procedures used to measure the volume and quality of oil for royalty purposes would have to comply with the requirements of subpart 3174 within 1 year of the effective date of the final rule.

A definition for ''Measurement period'' would be added to provide clear guidance when filling out measurement tickets, volume statements, and quantity transaction records.

The proposed rule would remove the definition for ''Outage gauging'' as the proposed rule would not contain a reference to ''outage gauging.'' The reason for removing the outage gauging option is discussed in the tank-gauge section later in this preamble.

The existing definition for ''Quantity transaction record (QTR)'' would be modified to include flow computers on LACTs, as well as on CMS, and would include any other systems approved by the BLM. The existing rule only addresses a QTR generated by a CMS, which has resulted in some confusion among operators, not knowing if this definition covered reports generated by LACTs and other BLM-approved equipment as well. This proposed change is intended to remove any confusion over QTR requirements.

The existing § 3174.1 definition for ''Tertiary device'' would be removed as it would be covered by the new definition of ''Electronic liquids measurement.''

The existing ''Vapor tight'' definition stated that vapor tight meant capable of holding pressure differential only slightly higher than that of installed pressure-relieving and vapor recovery devices. There has been confusion within industry that the definition meant if a pressure relieving device relieved pressure at its pre-set pressure on the tank then the vapor tight condition had been compromised. The existing definition for ''vapor tight'' would be modified to clarify the intent to retain the vapor tight condition to the settings of installed pressure-relieving or vapor-recovery devices. This proposed change is intended to remove any confusion over the meaning of vapor tight.

Section 3174.20 General Requirements

Currently located in existing § 3174.2, this section would list the general requirements that do not fit in any of the other more specific sections of the proposed rule. The proposed changes for this section are primarily administrative, such as updating cross references to reflect the new numbering of this proposed rule and removing the phase-in and commingling language, which would be revised and moved to a new § 3174.60, and a new § 3174.70.

Section 3174.30 Incorporation by Reference (IBR)

Building on existing § 3174.3, this proposed section lists 34 industry standards and recommendations that are proposed for incorporation by reference, either in whole or in part.

- API Manual of Petroleum Measurement Standards (MPMS) Chapter 2—Tank Calibration, Section 2A, Measurement and Calibration of Upright Cylindrical Tanks by the Manual Tank Strapping Method; First Edition, February 1995; Reaffirmed February 2012; Reaffirmed August 2017 (''API 2.2A''). This standard describes the procedures for calibrating upright cylindrical tanks used for storing oil. There are no substantive changes to this standard; we are proposing to add approval for the new reaffirmation date of this standard.
- API MPMS Chapter 2—Tank Calibration, Section 2B, Calibration of Upright Cylindrical Tanks Using the Optical Reference Line Method; First Edition, March 1989; Reaffirmed January 2013 (''API 2.2B''). This standard describes measurement and calibration procedures for determining the diameters of upright welded cylindrical tanks, or vertical cylindrical tanks with a smooth surface and either floating or fixed roofs. This standard was previously approved for IBR and is unchanged.
- API MPMS Chapter 2—Tank Calibration, Section 2C, Calibration of Upright Cylindrical Tanks Using the Optical-triangulation Method; First Edition, January 2002; Reaffirmed April 2013 (''API 2.2C''). This standard describes a calibration procedure for applications to tanks above 26 feet in diameter with cylindrical courses that are substantially vertical. There are no substantive changes to this standard; we are proposing to add approval for the new reaffirmation date of this standard.
- API MPMS Chapter 3.1A, Standard Practice for the Manual Gauging of Petroleum and Petroleum Products; Third Edition, August 2013; Reaffirmed December 2018 (''API 3.1A''). This standard describes the following: (a) The procedures for manually gauging the liquid level of petroleum and petroleum products in non-pressure fixed roof tanks; (b) Procedures for manually gauging the level of free water that may be found with the petroleum or petroleum products; (c) Methods used to verify the length of gauge tapes under field conditions and the influence of bob weights and temperature on the gauge tape length; and (d) Influences that may affect the position of gauging reference point (either the datum plate or the reference gauge point). There are no substantive changes to this standard; we are proposing to add approval for the new reaffirmation date of this standard.
- API MPMS Chapter 3—Tank Gauging, Section 1B—Standard Practice for Level Measurement of Liquid Hydrocarbons in Stationary Tanks by Automatic Tank Gauging; Third Edition, April 2018 (''API 3.1B''). This standard describes the level measurement of liquid hydrocarbons in stationary, above ground, atmospheric storage tanks using ATGs. This standard discusses automatic tank gauging in general, accuracy, installation, commissioning, calibration, and verification of ATG that measure either innage or ullage. There are no substantive changes to this standard; we are proposing to add approval for the new edition number of this standard.
- API MPMS Chapter 3—Tank Gauging, Section 6, Measurement of Liquid Hydrocarbons by Hybrid Tank Measurement Systems; First Edition, February 2001; Errata September 2005; Reaffirmed January 2017 (''API 3.6''). This standard describes the selection, installation, commissioning, calibration, and verification of Hybrid Tank Measurement Systems. This standard also provides a method of uncertainty analysis to enable users to select the correct components and configurations to address for the intended application. There are no substantive changes to this standard; we are proposing to add approval for the new reaffirmation date of this standard.
- API MPMS Chapter 4—Proving Systems, Section 1, Introduction; Third Edition, February 2005; Reaffirmed June 2014 (''API 4.1''). Section 1 is a general introduction to the subject of proving meters. This standard was previously approved for IBR and is unchanged.
- API MPMS Chapter 4—Proving Systems, Section 2—Displacement Provers; Third Edition, September 2003; Reaffirmed March 2011; Addendum February 2015 (''API 4.2''). This standard outlines the essential elements of meter provers that do, and also do not, accumulate a minimum of 10,000

whole meter pulses between detector switches, and provides design and installation details for the types of displacement provers that are currently in use. The provers discussed in this chapter are designed for proving measurement devices under dynamic operating conditions with single-phase liquid hydrocarbons. This standard was previously approved for IBR and is unchanged.

• API MPMS Chapter 4.5, Master-Meter Provers; Fourth Edition, June 2016 (''API 4.5''). This standard covers the use of displacement and Coriolis meters as master meters. The requirements in this standard are for single-phase liquid hydrocarbons. This standard was previously approved for IBR and is unchanged.

• API MPMS Chapter 4—Proving Systems, Section 6, Pulse Interpolation; Second Edition, May 1999; Errata April 2007; Reaffirmed October 2013 (''API 4.6''). This standard describes how the double-chronometry method of pulse interpolation, including system operating requirements and equipment testing, is applied to meter proving. This standard was previously approved for IBR and is unchanged.

• API MPMS Chapter 4.8, Operation of Proving Systems; Second Edition September 2013 (''API 4.8''). This standard provides information for operating meter provers on single-phase liquid hydrocarbons. This standard was previously approved for IBR and is unchanged.

• API MPMS Chapter 4—Proving Systems, Section 9—Methods of Calibration for Displacement and Volumetric Tank Provers, Part 2—Determination of the Volume of Displacement and Tank Provers by the Waterdraw Method of Calibration; First Edition, December, 2005; Reaffirmed July 2015 (''API 4.9.2''). This standard covers all of the procedures required to determine the field data necessary to calculate a Base Prover Volume of Displacement Provers by the Waterdraw Method of Calibration. This standard was previously approved for IBR and is unchanged.

• API MPMS Chapter 5—Metering, Section 6—Measurement of Liquid Hydrocarbons by Coriolis Meters; First Edition, October 2002; Reaffirmed November 2013 (''API 5.6''). This standard is applicable to custody-transfer applications for liquid hydrocarbons. Topics covered are API standards used in the operation of Coriolis meters, proving and verification using volume-based methods, installation, operation, and maintenance. This standard was previously approved for IBR and is unchanged.

• API MPMS Chapter 7.1, Temperature Determination—Liquid-in-Glass Thermometers; Second Edition, August 2017 (''API 7.1''). This standard describes how to correctly use various types of liquid-in-glass thermometers to accurately determine the temperatures of hydrocarbon liquids. This standard is proposed for incorporation for its standards covering the use of liquid-in-glass thermometers for temperature determination in tank-gauging operations.

• API MPMS Chapter 7—Temperature Determination, Section 2—Portable Electronic Thermometers; Third Edition, May 2018 (''API 7.2''). This standard describes the methods, equipment, and procedures for manually determining the temperature of liquid petroleum and petroleum products by use of a portable electronic thermometer. This standard is proposed for incorporation for its standards covering the use of portable electronic thermometers for temperature determination in tank gauging operations.

• API MPMS Chapter 7—Temperature Determination, Section 4—Dynamic Temperature Measurement; Second Edition, January 2018 (''API 7.4''). This standard describes methods, equipment, installation, and operating procedures for the proper determination of the temperature of hydrocarbon liquids under dynamic conditions in custody transfer applications. This standard is proposed for incorporation for its standards covering the use of dynamic temperature determination in LACT and CMS operations.

• API MPMS Chapter 8.1, Standard Practice for Manual Sampling of Petroleum and Petroleum Products; Fourth Edition, October 2013, (''API 8.1''). This standard covers procedures and equipment for manually obtaining samples of liquid petroleum and petroleum products from the sample point into the primary containers. This standard was previously approved for IBR and is unchanged.

• API MPMS Chapter 8.2, Standard Practice for Automatic Sampling of Petroleum and Petroleum Products; Fourth Edition, November 2016 (''API 8.2''). This standard describes general procedures and equipment for automatically obtaining samples of liquid petroleum, petroleum products, and crude oils from a sample point into a primary container. There are no substantive changes to this standard; we are proposing to add approval for the new edition number of this standard.

• API MPMS Chapter 8—Sampling, Section 3—Standard Practice for Mixing and Handling of Liquid Samples of Petroleum and Petroleum Products; First Edition, October 1995; Errata March 1996; Reaffirmed, March 2010 (''API 8.3''). This standard covers the handling, mixing, and conditioning procedures required to ensure that a particular representative sample of the liquid petroleum or petroleum product is delivered from the primary sample container/receiver into the analytical test apparatus or into intermediate containers. This standard was previously approved for IBR and is unchanged.

• API MPMS Chapter 9.1, Standard Test Method for Density, Relative Density, or API Gravity of Crude Petroleum and Liquid Petroleum Products by Hydrometer Method; Third Edition, December 2012; Reaffirmed, May 2017 (''API 9.1''). This standard covers the determination, using a glass hydrometer in conjunction with a series of calculations, of the density, relative density, or API gravity of crude petroleum, petroleum products, or mixtures of petroleum and nonpetroleum products normally handled as liquids and having a Reid vapor pressure of 101.325 Kilopascal (kPa) (14.696 psi) or less. There are no substantive changes to this standard; we are proposing to add approval for the new reaffirmation date of this standard.

• API MPMS Chapter 9.2, Standard Test Method for Density or Relative Density of Light Hydrocarbons by Pressure Hydrometer; Third Edition, December 2012; Reaffirmed, May 2017 (''API 9.2''). This standard covers the determination of the density or relative density of light hydrocarbons including liquefied petroleum gases having a Reid vapor pressure exceeding 101.325 kPa (14.696 psi). There are no substantive changes to this standard; we are proposing to add approval for the new reaffirmation date of this standard.

• API MPMS Chapter 9.3, Standard Test Method for Density, Relative Density, and API Gravity of Crude Petroleum and Liquid Petroleum Products by Thermohydrometer Method; Third Edition, December 2012; Reaffirmed, May 2017 (''API 9.3''). This standard covers the determination, using a glass thermohydrometer in conjunction with a series of calculations, of the density, relative density, or API gravity of crude petroleum, petroleum products, or mixtures of petroleum and nonpetroleum products normally handled as liquids and having a Reid vapor pressure of 101.325 kPa (14.696 psi) or less. There are no substantive

changes to this standard; we are proposing to add approval for the new reaffirmation date of this standard.

• API MPMS Chapter 10.4, Determination of Water and/or Sediment in Crude Oil by the Centrifuge Method (Field Procedure); Fourth Edition, October 2013; Errata, March 2015 (''API 10.4''). This standard describes the field centrifuge method for determining both water and sediment, or sediment only, in crude oil. This standard was previously approved for IBR and is unchanged.

• API MPMS Chapter 11—Physical Properties Data, Section 1—Temperature and Pressure Volume Correction Factors for Generalized Crude Oils, Refined Products and Lubricating Oils; May 2004; Addendum 1, September 2007; Reaffirmed, August 2012 (''API 11.1''). This standard provides the algorithm and implementation procedure for the correction of temperature and pressure effects on density and volume of liquid hydrocarbons that fall within the categories of crude oil. This standard was previously approved for IBR and is unchanged.

• API MPMS Chapter 12.1.1—Calculation of Static Petroleum Quantities—Upright Cylindrical Tanks and Marine Vessels; Fourth Edition, February 2019 (API 12.1.1). This standard guides users through the necessary steps to calculate static liquid quantities at atmospheric conditions in upright, cylindrical tanks, and marine tank vessels. This standard is proposed for incorporation for its standards covering the calculation of net standard volume for tank gauging operations.

• API MPMS Chapter 12—Calculation of Petroleum Quantities, Section 2—Calculation of Petroleum Quantities Using Dynamic Measurement Methods and Volumetric Correction Factors, Part 2—Measurement Tickets; Third Edition, June 2003; Reaffirmed February 2016 (''API 12.2.2''). This standard provides standardized calculation methods for the quantification of liquids and specifies the equations for computing correction factors, rules for rounding, calculation sequences, and discrimination levels to be employed in the calculations. There are no substantive changes to this standard; we are proposing to add approval for the new reaffirmation date of this standard.

• API MPMS Chapter 12—Calculation of Petroleum Quantities, Section 2—Calculation of Petroleum Quantities Using Dynamic Measurement Methods and Volumetric Correction Factors, Part 3—Proving Report; First Edition, October 1998; Reaffirmed May 2014 (''API 12.2.3''). This standard provides standardized calculation methods for the determination of meter factors under defined conditions. The criteria contained here will allow different entities using various computer languages on different computer hardware (or by manual calculations) to arrive at identical results using the same standardized input data. This document also specifies the equations for computing correction factors, including the calculation sequence, discrimination levels, and rules for rounding to be employed in the calculations. There are no substantive changes to this standard; we are proposing to add approval for the new reaffirmation date of this standard.

• API MPMS Chapter 12—Calculation of Petroleum Quantities, Section 2—Calculation of Petroleum Quantities Using Dynamic Measurement Methods and Volumetric Correction Factors, Part 4—Calculation of Base Prover Volumes by the Waterdraw Method; First Edition, December, 1997; Errata July 2009; Reaffirmed September 2014 (''API 12.2.4''). This standard provides standardized calculation methods for the quantification of liquids and the determination of base prover volumes under defined conditions. The criteria contained in this document allow different individuals, using various computer languages on different computer hardware (or manual calculations), to arrive at identical results using the same standardized input data. This standard specifies the equations for computing correction factors, rules for rounding, the sequence of the calculations, and the discrimination levels of all numbers to be used in these calculations. There are no substantive changes to this standard; we are proposing to add approval for the new reaffirmation date of this standard.

• API MPMS Chapter 13.3, Measurement Uncertainty; Second Edition, December 2017 (''API 13.3''). This standard establishes a methodology for developing an uncertainty analysis. There are no substantive changes to this standard; we are proposing to add approval for the new edition number of this standard.

• API MPMS Chapter 14, Section 3, Orifice Metering of Natural Gas and Other Related Hydrocarbon Fluids—Concentric, Square-edged Orifice Meters, Part 1, General Equations and Uncertainty Guidelines; Fourth Edition, September 2012; Errata July 2013; Reaffirmed, September 2017 (''API 14.3.1''). This standard provides reference for engineering equations and uncertainty estimations. There are no substantive changes to this standard; we are proposing to add approval for the new reaffirmation date of this standard.

• API MPMS Chapter 18—Custody Transfer, Section 1—Measurement Procedures for Crude Oil Gathered From Lease Tanks by Truck; Third Edition, May 2018 (''API 18.1''). This standard describes the procedures, organized into a recommended sequence of steps, for manually determining the quantity and quality of crude oil being transferred under field conditions. There are no substantive changes to this standard; we are proposing to add approval for the new edition number of this standard.

• API MPMS Chapter 21—Flow Measurement Using Electronic Metering Systems, Section 2—Electronic Liquid Volume Measurement Using Positive Displacement and Turbine Meters; First Edition, June 1998; Reaffirmed October 2016 (''API 21.2''). This standard provides for the effective utilization of electronic liquid measurement systems for custody-transfer measurement of liquid hydrocarbons. There are no substantive changes to this standard; we are proposing to add approval for the new reaffirmation date of this standard.

• API Recommended Practice (RP) 12R1, Setting, Maintenance, Inspection, Operation and Repair of Tanks in Production Service; Fifth Edition, August 1997; Reaffirmed April 2008; Addendum 1, December 2017 (''API RP 12R1''). This recommended practice is a guide on new tank installations and maintenance of existing tanks. Specific provisions of this recommended practice are identified as requirements in this final rule. There are no substantive changes to this standard; we are proposing to add approval for the new Addendum 1 to this standard.

• API RP 2556, Correction Gauge Tables for Incrustation; Second Edition, August 1993; Reaffirmed November 2013 (''API RP 2556''). This recommended practice provides for correcting gauge tables for incrustation applied to tank capacity tables. The tables given in this recommended practice show the percent of error of measurement caused by varying thicknesses of uniform incrustation in tanks of various sizes. This standard was previously approved for IBR and is unchanged.

The BLM is proposing to remove six industry standards that are currently incorporated by reference in existing § 3174.3.

• API MPMS Chapter 6—Metering Assemblies, Section 1, Lease Automatic Custody Transfer (LACT) Systems; Second Edition, May 1991; Reaffirmed May 2012 (''API 6.1''). This standard describes the design, installation, calibration, and operation of a LACT system. API 6.1 is proposed for removal due to the vagueness of its content. It is

not clear to the BLM what constitutes the enforceable content within the standard. To ensure consistent understanding and enforcement of the requirements, this rule would remove this standard and include new sections in the proposed rule (§§ 3174.101, 3174.103 and 3174.107) to capture the requirements that were intended to be addressed by API 6.1.

• API MPMS Chapter 7, Temperature Determination; First Edition, June 2001, Reaffirmed February 2012 (''API 7''). This standard describes the methods, equipment, and procedures for determining the temperature of petroleum and petroleum products under both static and dynamic conditions. API Chapter 7 is currently under revision by API. Many of the requirements in this chapter that were incorporated into the existing subpart 3174 have been included in the published editions of other API Chapter 7 sections. The BLM is therefore proposing to remove the general reference to Chapter 7 and include specific API Chapter 7 sections.

• API MPMS Chapter 7.3, Temperature Determination—Fixed Automatic Tank Temperature Systems; Second Edition, October 2011 (''API 7.3''). This standard describes the methods, equipment, and procedures for determining the temperature of petroleum and petroleum products under static conditions using automatic methods. API 7.3 is currently under revision by API. This proposed rule does not specifically address fixed tank temperature determination methods and dynamic temperature determination is covered under API 7.4. The BLM is therefore proposing to remove this standard.

• API MPMS Chapter 12—Calculation of Petroleum Quantities, Section 2, Calculation of Petroleum Quantities Using Dynamic Measurement Methods and Volumetric Correction Factors, Part 1, Introduction; Second Edition, May 1995; Errata July 2009; Reaffirmed March 2014 (''API 12.2.1''). This standard provides standardized calculation methods for the quantification of liquids and the determination of base prover volumes under defined conditions. The standard specifies the equations for computing correction factors, rules for rounding, calculational sequences, and discrimination levels to be employed in the calculations. API 12.2.1 is proposed for removal because the BLM believes the content within this standard is sufficiently covered in incorporated standards API 12.2.2, API 12.2.3 and API 12.2.4.

• API MPMS Chapter 13—Statistical Aspects of Measuring and Sampling, Section 1, Statistical Concepts and Procedures in Measurements; First Edition, June, 1985 Reaffirmed February 2011; Errata July 2013 (''API 13.1''). This standard covers the basic concepts involved in estimating errors by statistical techniques and ensuring that results are quoted in the most meaningful way. This standard also discusses the statistical procedures that should be followed in estimating a true quantity from one or more measurements and in deriving the range of uncertainty of the results. API 13.1 is proposed for removal because it has been superseded with no replacement available. The BLM believes the statistical concepts provided by this standard are sufficiently covered in incorporated API 13.3.

• API MPMS Chapter 18, Section 2, Custody Transfer of Crude Oil from Lease tanks Using Alternative Measurement Methods, First Edition, July 2016 (''API 18.2''). This standard defines the minimum equipment and methods used to determine the quantity and quality of oil being loaded from a lease tank to a truck trailer without requiring direct access to a lease tank gauge hatch. API 18.2 is proposed for removal due to the confusion surrounding the standard's content and how the standard fits into the BLM's PMT review and the BLM's approval process. The BLM has found that there is significant confusion as to what methods and processes outlined in API 18.2 are automatically approved and supersede the requirement that operators follow the PMT review and BLM approval process for a method or process not specifically outlined in the regulations. The BLM did not intend for API 18.2 to override the PMT review and BLM approval process. Rather, this API standard was meant to assist industry in considering alternative methods for the BLM to review for approval. The BLM still recommends that industry use API 18.2 as guidance when considering alternative methods for the BLM to review for approval.

Section 3174.31 Specific Measurement Performance Requirements

Currently located in existing § 3174.4, this proposed section specifies the measurement-performance requirement for each FMP. The uncertainty volume levels proposed in § 3174.31(a) align with the new FMP categories as previously discussed. The overall uncertainty tolerances have been reviewed, taking into consideration current equipment capabilities and industry standard practices and procedures. The BLM believes the current overall uncertainty tolerances of ±0.50 percent and ±1.50 percent are reasonable for very-high-volume (>15,000 Bbl per month) and high-volume (>1,500 Bbl per month and <15,000 Bbl/month) FMPs, respectively, and therefore the BLM would retain these uncertainty tolerances in the proposed rule. As in the current rule, the BLM believes the proposed rule's measurement uncertainties are reasonable, based on available equipment capabilities, industry standard practices and procedures, and BLM field experience. The BLM specifically requests comment on whether the proposed uncertainty requirements and production thresholds combinations are appropriate, or if different combinations should be considered. The BLM is particularly interested in the views of States and other non-Federal leaseholders with significant oil and gas production and who may have experience in implementing different thresholds based on their own assessments of risk tolerance and compliance costs. Specifically,

(1) Are the proposed uncertainty levels and FMP category combinations reasonable or unreasonable and why?

(2) What would be a better uncertainty level and FMP category recommendation to minimize risk of mismeasurement and compliance costs and why?

Notably, the new low-volume FMP category would be exempt from overall uncertainty requirements. This exemption is intended to cover the wells that are such low producers that they could be rendered uneconomical by the measurement performance thresholds, thereby avoiding premature shut-in or plugging of these wells. The assumption is that measurement within this category will comply with the requirements for manual tank gauge operations, which tend to be the least expensive measurement process.

The existing paragraph § 3174.4(b) would be renumbered to § 3174.31(b) with no change to the language concerning bias.

The existing paragraph § 3174.4(c) would be renumbered to § 3174.31(c) with no change to the language concerning verifiability.

The existing paragraph § 3174.4(d), requiring alternative equipment to meet or exceed the performance requirements of this section, would be moved to § 3170.3 because this requirement applies to both subparts 3174 and 3175.

Section 3174.40 Approved Measurement Equipment and Data Requirements

The BLM is proposing to add new §§ 3174.40 through 3174.43, which would consolidate approved measurement equipment and data requirements in one place, rather than having them scattered throughout the regulation, as they are in existing subpart 3174. This would make it easier for operators and BLM employees to find this information.

Section 3174.41 Measurement Equipment Requiring BLM Approval

Under the proposed rule, the equipment requiring BLM approval prior to use would be listed in § 3174.41. The introductory paragraph to § 3174.41 would direct operators to the BLM's website to locate the list of PMT-reviewed and BLM-approved equipment and corresponding requirements. This section also would inform operators that the BLM website provides instructions on how to apply for BLM approval for a piece of equipment through the PMT, and would list the BLM's recommended equipment testing procedures. These testing procedures would be recommended, rather than required, and would not be adopted through the notice-and-comment rule-making process. The BLM is proposing to recommend testing procedures rather than adopt a set of required testing procedures through notice-and-comment rule-making to allow the BLM flexibility in modifying its recommended procedures as technology develops, based on experience and input from operators and manufacturers, without undergoing the time-consuming rule-making process. The BLM is concerned that codifying approved testing procedures by regulation would encumber the BLM and operators with outdated testing procedures that conflict with testing procedures developed by industry associations or are not workable for unanticipated technologies or methods. In addition, by recommending testing procedures as opposed to requiring operators to use specific approved procedures, the BLM would give operators additional flexibility in choosing which procedures to employ, so long as they can demonstrate that the testing procedure results in reliable data. As explained in the discussion of proposed § 3170.30 earlier, the purpose of the PMT review process, and any associated testing procedures, would be to assess whether the proposed alternative equipment meets the minimum performance standards of subpart 3174. The BLM would tailor any recommended testing procedure to the narrow purpose of the PMT review process, which is verifying that the equipment meets the minimum performance standards codified in the regulation. The recommended testing procedures would be informed by the PMT's measurement expertise and, in general, would involve a baseline accuracy test and inform the PMT regarding a range of relevant operating conditions (*e.g.,* pressure) in which the equipment meets the minimum performances standards. Where possible, the BLM's recommended testing procedures will reflect widely accepted testing procedures, such as those developed by other regulatory agencies, equipment testing authorities, and industry associations (*e.g.,* the International Organization of Legal Metrology, the Measuring Instruments Directive, Measurement Canada, NIST, and API). The BLM recognizes that there is a tradeoff between this flexibility and allowing for public comment on testing procedures, through a rulemaking process. The BLM requests comment on this tradeoff. Finally, the BLM notes that the information provided on its website with respect to the PMT review process and its recommended testing procedures may be considered ''guidance documents'' subject to the requirements of Executive Order 13891, ''Promoting the Rule of Law Through Improved Agency Guidance Documents.''

Section 3174.42 Approved Measurement Equipment

Under the proposed rule, the measurement equipment that would be automatically approved for use would be listed in § 3174.42. The purpose of proposed § 3174.42 is to better organize subpart 3174 by listing in one place the equipment that does not require additional BLM approval. Specific section citations are included as well in order to expedite locating the requirements for the pieces of equipment within subpart 3174.

Section 3174.43 Data Submission and Notification Requirements

Under the proposed rule, § 3174.43(a) would list the information that operators must submit to the BLM using a Sundry Notice and paragraph (b) would list the information that they must submit to the BLM upon request of the Authorized Officer (AO).

The purpose of proposed § 3174.43 is to better organize subpart 3174 by listing in one place the data submission and notification requirements of subpart 3174. Specific section citations are included as well to expedite locating the requirement within subpart 3174.

Section 3174.50 Grandfathering

The BLM is proposing new § 3174.50, which introduces the concept of ''grandfathering'' to address certain facilities in operation prior to the effective date of this rule. The grandfathering provisions would no longer be applicable if the oil FMP moves to the proposed very-high volume category or if the measurement equipment is replaced.

Under the existing regulations (§§ 3174.6(b)(5)(ii)(A), 3174.6(b)(5)(iii), 3174.8(a)(1), and 3174.9(a)), the operator can use only certain pieces of equipment that have been approved by the BLM, through the PMT, and placed on the list of BLM-approved equipment. The implementation of this provision was delayed until January 17, 2019, under § 3174.2(g) and was further delayed by practical necessity (see IM 2018–077 (June 29, 2018)).

Proposed § 3174.50 would exempt all equipment listed in proposed § 3174.41 that is in place at high- or low-volume FMPs on or before the effective date of the final rule from having to have approval prior to use. Equipment at very-high-volume FMPs, measurement data systems (see proposed § 3174.121(a)) at high- and low-volume FMPs, and temporary measurement equipment (see proposed § 3174.140) at high- and low-volume FMPs would not be exempt regardless of the date of installation.

The BLM is not proposing to grandfather equipment installed at very-high-volume FMPs because of the higher risk of significant mismeasurement due to the high volume of oil measured and because the revenue resulting from the high volumes would make replacing equipment, if necessary, economically feasible. Portable electronic thermometers are not being proposed for grandfathering due to accuracy limitations between devices of different manufacture and models. Oil temperature is a significant factor in volume corrections to net standard volume. The BLM believes that grandfathering these devices without quantifying their accuracy at operating conditions could pose a significant risk to royalty income. Measurement data systems are not being proposed for grandfathering due to the potential that impacts to royalty income could be significant if net standard volume calculations are not properly calculated. Temporary measurement equipment is not proposed to be grandfathered due to issues that have been identified,

discussed further in the § 3174.140 discussion later in the preamble.

There are three reasons that the BLM is proposing to add this grandfathering provision. First, shortly after its inception, the PMT realized that the workload of reviewing data from all existing makes, models, and sizes of equipment requiring approval under existing subpart 3174 would be enormous and could take years to complete. Second, operators have expressed concerns about the cost of replacing existing equipment that was not on the BLM list of approved equipment, especially at lower-volume FMPs. Third, operators are concerned about purchasing equipment prior to the effective date of the implementation of the requirement to use of BLM-approved equipment. Specifically, operators are concerned about having to replace the newly purchased equipment should the equipment not be on the BLM's list of approved equipment. Grandfathering would allow any equipment in place at high- or low-volume FMPs prior to the effective date of the rule to remain in place until the equipment is replaced. Equipment installed after the effective date of the rule would not be grandfathered, but the requirement to use only BLM-approved equipment would not be effective until 2 years after the effective date of the rule.

Based on these concerns, the BLM proposes grandfathering all equipment listed in § 3174.41(a) through (i) and installed at high- or low-volume FMPs existing prior to the effective date of the final rule.

The BLM believes almost all of the FMPs in the proposed low-volume category use manual tank gauging and would not have been subject to BLM approval under the current regulations. Therefore, grandfathering FMPs in this category would not be expected to have a substantive impact with respect to measurement accuracy or cost-savings.

For the FMPs in the proposed high-volume category, the effect of grandfathering depends on the measurement method. If the FMP uses manual tank gauging, then there would be no incremental effect since the FMP would not have been subject to BLM approval under the current regulations. If the FMP uses measurement equipment, then that equipment would be grandfathered and would no longer be subject to BLM approval, as it is under the current regulations. The BLM notes that under current regulations, the uncertainty level is high enough such that most meters would easily meet the uncertainty level and be approved. Therefore, the grandfathering of this equipment would generally result in a reduction of administrative costs only. It would dramatically decrease the number of makes, models, and sizes of equipment that would be subject to review by the PMT and would assure operators that they would not have to replace this equipment, reducing a potential financial burden and providing some operational certainties to operators.

The BLM notes that the proposed rule would increase the number of volumetric categories from two to three, and would reduce the production threshold for the most highly regulated category from 30,000 bbl/month to 15,000 bbl/month. Compare current § 3174.4 with proposed §§ 3174.10, 3174.31. Due to this proposed change, more FMPs would fall in the ''very-high'' category and would be subject to more stringent measurement standards. On the whole, the BLM estimates that the additional costs associated with that change would more than offset the potential cost savings from the grandfathering provisions.

The proposed grandfathering could have some impacts on the BLM's ability to ensure accurate measurement, the absence of statistically significant bias, and verifiability, all of which are required under the performance goals in both the existing regulations and the proposed regulations (see current § 3174.4 and proposed § 3174.31). For example, for high-volume FMPs, which must comply with the uncertainty performance goals under § 3174.31 of the proposed rule, the grandfathering of equipment could impact the BLM's ability to ensure accurate measurement. The uncertainty calculation, which is used to determine and enforce overall uncertainty, would be based on the manufacturer's specifications for that device. It has been the BLM's experience that manufacturers develop specifications based on proprietary test procedures and test data interpretation methods that make it difficult to understand the actual field performance of their devices. The actual overall measurement uncertainty of these grandfathered devices has the potential to be substantially worse than the measurement uncertainty of those devices which are not grandfathered and that are subject to independent review and analysis by the PMT based on laboratory test data captured following the BLM test procedures.

The BLM is concerned with the inherent risk to the measurement uncertainty for Federal or Indian trust mineral percentages in the grandfathering of equipment currently in use. The BLM seeks comments on these proposed new conditions for grandfathering of existing equipment. Specifically, the BLM would request comment from the public on the following:

1. What would be the overall impact for not allowing or allowing this grandfathering option?
2. Are the thresholds for the proposed grandfathering set at appropriate levels?
3. Is there a better option or method for ensuring no risk to measurement of Federal or Indian trust mineral interest while allowing for the continued use of equipment currently in service?

Section 3174.60 Timeframes for Compliance

The compliance timeframes for current subpart 3174 are located in existing § 3174.2(e), (f), and (g). Proposed § 3174.60 would establish new phase-in periods based on the FMP installation date and the FMP category (very-high-volume, high-volume, or low-volume).

Proposed § 3174.60(a) would require all FMPs installed after January 17, 2017, to comply with the existing and proposed subpart 3174 requirements. The BLM believes this timeframe is justified because existing requirements became effective on January 17, 2017, and operators with FMPs installed after that date should already be meeting these requirements. The majority of the changes in this proposed rule would clarify existing requirements, or make minor modifications to existing requirements, and would not require immediate retrofitting. This further supports requiring immediate compliance for these FMPs.

Based on the timing of the FMP number application process outlined in subpart 3173, the existing subpart 3174 phase-in periods for existing FMPs was intended to range from 1 to 3 years. Due to extended programming issues, the BLM's new AFMSS 2 data system's ability to accept FMP-number applications has been delayed, resulting in delays to the subpart 3174 phase-in periods. As of the publication of this proposed rule, the AFMSS 2 database is still not capable of accepting FMP number applications. For this reason the BLM is proposing § 3174.60(b) to modify the phase-in criteria for FMPs in existence after January 17, 2017. All very-high-volume FMPs existing as of January 17, 2017, would need to comply with this rule within 1 year after the effective date of the final rule. All high-volume and low-volume FMPs existing as of January 17, 2017, would need to comply with this rule within 2 years after the effective date of the final rule. After the existing rule became effective on January 17, 2017, operators began

requesting to use ATG and Coriolis meters at their existing FMPs. Subpart 3174 is not structured to allow early compliance at existing FMPs. The BLM issued policy in IM 2018–069, June 29, 2018 giving guidance and recommendations to BLM field offices to facilitate early adoption of ATG and Coriolis meters. Proposed § 3174.60(b)(3) would allow an operator to voluntarily begin full compliance with the requirements of this subpart at any FMP prior to the mandatory compliance dates specified in paragraphs (b)(1) and (b)(2). The BLM inspection and enforcement staff would need to inspect the FMP to the correct regulation, so the BLM would need to be notified if an FMP has begun early compliance. The operator would be required to notify the AO within 30 days by Sundry Notice of the date the FMP began early compliance.

Proposed § 3174.60(c) would require FMPs installed before January 17, 2017, to continue to comply with Onshore Oil and Gas Order No. 4, and any COAs, written orders, and applicable variances until the compliance deadlines specified in paragraph (b) are reached or the operator begins voluntary compliance with the subpart 3174 requirements.

Proposed § 3174.60(d) would rescind all requirements and standards related to measurement of oil established by Onshore Oil and Gas Order No. 4, and any COAs, written orders, and variances once the phase-in date has passed.

Proposed § 3174.60(e) would delay the equipment-approval requirements that are listed in proposed § 3174.41 for 2 years after the effective date of the final rule. This delay would provide the BLM with the time necessary to review and approve equipment as proposed in § 3174.41.

Section 3174.70 Measurement Location.

This new section would use identical language from existing § 3174.2 to prohibit commingling and off-lease measurement except where prior BLM approval has been obtained pursuant to the appropriate provisions in subpart 3173.

3174.80 Oil Storage Tank Equipment

This new section proposes only one minor change for oil storage tanks from existing § 3174.5(b). Under the proposed rule, compliance with standard API 12R1 would be limited to compliance with subsection 4 of that standard, as opposed to compliance with the entire recommended practice (RP). The existing rule incorporates the entire API RP 12R1, which requires the BLM to be involved in the maintenance and repair of tanks. The maintenance and repair of tanks is the responsibility of the operator and is not an appropriate subject for a regulation focused on accurate measurement.

Paragraphs (a) through (d) contain requirements that apply to all oil storage tanks, whether a single tank or tank battery connected to a LACT or set up for tank gauging measurement.

The requirements of paragraphs (e) and (f) would only apply to tanks configured for tank-gauging measurement.

3174.81 Oil Measurement by Tank Gauging

This section would contain the same language as the existing § 3174.5(a), with the exception of updating the citations for the tank gauging requirements. This section identifies, by the reference to the relevant sections in the subpart, the required processes for obtaining the data necessary to determine total net standard volume removed from a tank by manual tank gauging operations.

3174.82 Oil Tank Calibration

This section contains requirements for calibrating an oil storage tank when the tank is to be used as an FMP for tank-gauging operations. The same API standards are being proposed for incorporation as in current § 3174.5(c), namely, API 2.2A, API 2.2B, API 2.2C, and API RP 2556.

In addition to retaining the requirements of current § 3174.5(c), three additional requirements are being proposed for FMP oil-tank calibration. First, the tank-capacity tables would be required to be calculated for a tank-shell temperature of 60 °F. This is recommended in API 2.2A and the BLM believes this should be a requirement, rather than an option. This change would standardize all FMP tank-capacity tables to one tank shell temperature. Second, FMP tank-capacity tables would be required to be recalculated if the reference gauge point is changed. This is another recommendation in API 2.2A that the BLM believes should be a requirement in order to ensure the most accurate volumes are being obtained from FMP tank-capacity tables. Third, FMP tank-calibration charts (tank tables) would be required to be submitted to the AO by Sundry Notice within 45 days after a calibration or recalculation of charts. This is a change to the existing rule that only requires operators to submit FMP tank calibration charts to the AO after calibration without specifying how they are to be submitted. The BLM is proposing this change to require submission both upon initial calibration and whenever an FMP tank-calibration chart is recalculated for any reason. The BLM needs to have the most current FMP tank-calibration charts in its records and is specifying in proposed § 3174.82(d) that FMP tank-calibration charts (tank tables) would be required to be submitted to the AO by Sundry Notice would provide a common tracking mechanism for the BLM to use to ensure that this requirement has been met.

3174.83 Tank Gauging Procedures

Proposed § 3174.83(a) reiterates the requirement located in existing § 3174.6(a). Proposed § 3174.83 references other sections that contain procedures that operators must follow to determine the quality and quantity of oil measured under field conditions at an FMP. This section employs the same language as existing § 3174.6(a) with exception of adding the cross-references to other sections.

Proposed § 3174.83(b) follows existing § 3174.6(b), with the exception of removing a reference to API 18.2. The BLM proposes to remove the reference to API 18.2 because of the confusion surrounding the application of the content of the standard. The previous discussion of § 3174.30 provides more detail concerning API 18.2 and the decision to not include it in revised subpart 3174.

Proposed § 3174.83(c) contains proposed changes to the run-ticket section (existing § 3174.12(a)). There has been confusion both within the BLM and industry as to what extent operators must complete the calculations required in existing § 3174.12(a) during field operations. Some believe the existing rule requires that field operations must complete all the run-ticket calculations found in § 3174.12(a). This was not the BLM's intent. The current regulation dictates the required calculations, but not when or where these calculations could be made. This proposed section would clarify that the field staff is required to collect only the observed data specified in proposed § 3174.161(a) in the field.

Proposed § 3174.83(d) expresses the same requirement as existing § 3174.6(b)(1).

Proposed § 3174.83(e) reflects the requirement currently contained in existing § 3174.6 (b)(7). However, the reference to ''break[ing] the tank load line valve seal'' would be removed. There may be situations where the transfer is not to a tanker truck but rather down a pipeline, so this language

has been deleted to remove any potential confusion.

3174.84 Tank Oil Sampling

This section reflects the requirement currently located in existing § 3174.6(b)(3), with a proposed modification that would allow for alternative methods approved by the BLM.

3174.85 Determining S&W Content

This section reflects the requirement currently located in existing § 3174.6(b)(6). This proposed section employs the same language as current § 3174.6(b)(6) with the exception of updating the cross-references.

3174.86 Tank Oil Temperature Determination

This section reflects the requirements currently located in existing § 3174.6(b)(2) with a few clarifying changes.

Under § 3174.86 of the proposed rule, the BLM would eliminate the sentence in existing § 3174.6(b)(2) which reads: ''Opening temperature may be determined before, during, or after sampling.'' The BLM has determined that this sentence may cause confusion and is unnecessary. The temperature of oil contained in an FMP tank would be required to be determined by following the requirements of paragraphs (a)(1) through (4) of this section, and be performed at the appropriate point during the custody transfer process in accordance with standard industry procedures.

Under § 3174.86(a) of the proposed rule, the BLM would add language that says, ''For tanks less than 5000 bbl nominal capacity, a single temperature measurement at the middle of the liquid may be used.'' The existing regulation does not have language concerning the temperature determination procedures based on the size of the tank. Therefore, there has been considerable confusion among operators and purchasers as to whether they were required to take multiple temperatures during the custody transfer procedure, or if the single temperature in the middle of the fluid column is sufficient. By including this language, the fact that a single temperature is sufficient for tanks of less than 5,000 bbls capacity is made clear.

With § 3174.86(c) of the proposed rule, the BLM is seeking to clarify and expand the use of electronic thermometers for tank oil-temperature determination. The PMT would review the specific makes and models of electronic thermometers and the BLM would list the approved equipment at *www.blm.gov.* The temperature of the oil has a direct effect on the royalty determination; therefore, it is critical that the device that measures oil temperature be compliant with the performance standards of the proposed regulation. This change would bring the requirements for electronic thermometers in line with the standards for temperature transmitters that perform the same function in LACT and CMS transfers. The proposed change also seeks to expand the use of electronic thermometers to allow for a flow-weighted average of the temperature during the transfer in lieu of a single opening and closing point. The BLM recognizes that the functionality of many electronic thermometers allow for live data over the entire transfer period which can allow for a more representative average for the oil temperature. This change would still meet the intent of the current regulation, but would allow operators to create more automated systems if they desire.

3174.87 Observed Oil Gravity Determination

This section reflects the requirements currently located in § 3174.6(b)(4). This proposed section employs the same language as that found in current § 3174.6(b)(4), with exception of updating the cross-references.

3174.88 Measuring Tank Fluid Level

Proposed § 3174.88 would essentially retain the manual tank gauging and ATG methods of tank measurement found in current § 3174.6(b)(5). The proposed changes would primarily remove obsolete requirements and provide clarification on requirements that have caused confusion.

In an attempt to simplify subpart 3174, proposed § 3174.88(a) would remove references to outage gauging and to an outage gauging bob. The BLM is not aware of any outage gauging method of measurement taking place at any FMP.

Under § 3174.88(a) of the proposed rule, the BLM would eliminate the sentence from existing § 3174.6(b)(5)(i)(E) which reads: ''The same tape and bob must be used for both opening and closing gauges.'' The BLM has determined that this sentence is unnecessary since all tapes and bobs are required to be verified for accuracy when new, when repaired, and at least annually from the in-service date thereafter, by comparison with a reference (*e.g.,* a master tape) in accordance with API MPMS 3.1A. Annex A. By removing the ''same tape and bob'' sentence, the tape and bob used for opening and closing gauging procedures does not have to be the same. However, the tape and bob measurement equipment must still be verified and in compliance with API MPMS 3.1A.

Under § 3174.88(a)(4) of the proposed rule, a suitable product-indicating paste may be used, but the use of chalk or talcum powder would be prohibited. BLM field offices have stated that the product-indicating paste available on the market has a melting point below the temperature of oil contained in the storage tanks. This creates a situation where the product being gauged is evaporating faster than the gauge tape can be read and the product indicating paste is ineffective in facilitating the reading of the gauge tape. API 3.1A discourages the use of chalk or talcum powder in the gauging procedure but also fails to address situations in which oil temperatures are higher than the melting point of known available product-indicating pastes.

The BLM is requesting comments and recommendations on how to address tank gauging of evaporating product with temperatures above the melting point of known available product-indicating pastes.

In proposed § 3174.88(b)(2), the proposed rule would clarify the installation requirements for ATGs. The existing regulation incorporates API 3.1B; however, inspectors and operators have expressed confusion about the installation requirements. The proposed change would state the exact sections of the API 3.1B that provide guidance on ATG installation, and would also reference the manufacturer's recommendations and any conditions of approval the BLM has placed on the equipment.

The proposed rule would modify the requirement for verification logs on ATGs. The existing regulation requires verification of the ATG each month (or before next sale, whichever is longer) and requires that the operator maintain a detailed log of the verifications that is available upon request to the BLM. This can create problems for BLM inspectors, as operators are not required to keep the log on site, so there is no immediately available evidence that an operator conducted the verifications as required by the regulation. This can result in an undue administrative burden on BLM inspectors, who must request operator's logs to verify the compliance. The proposed rule seeks to alleviate this burden with a requirement in § 3174.88(b)(5) that operators provide a statement of date of last verification at the FMP. This would allow BLM inspectors to check for compliance without log requests to the operators.

This proposed change would also bring the verification date requirements of this part in line with the subpart 3175 information requirements that flow-computer verification must be available on-site.

The proposed rule would remove the references to dynamic measurement from the tank-gauging section of the regulation. The BLM has reviewed the existing regulation and found that the provisions regarding dynamic measurement do not fit in this section. The prescriptive nature of the process laid out for tank gauging is such that dynamic measurement would provide no benefit to the operator. The proposed regulation would let dynamic measurement be addressed by § 3174.170, the section pertaining to oil measurement by other methods. This move would reduce confusion, as any dynamic method would have to go through a PMT review process. The proposed change would also remove references to API 18.2 in general and would replace them with specific references to ATG, automatic temperature measurement, and automatic sampling in order to narrow the scope of the section and reduce confusion. The change would clarify this section while still allowing the operator to use other methods through the alternative methods approval process.

3174.90 LACT systems—General Requirements

Proposed § 3174.90(a) and (b) would use the same language as the existing § 3174.7(a) and (b) for LACT construction, operation, and proving references, only updating regulatory citations to match proposed numbering changes for this subpart.

Proposed § 3174.90(c) would have the same language that is in existing § 3174.7(d), concerning the LACT components being accessible for inspection.

Proposed § 3174.90(d) would retain the language of existing § 3174.7(g), which prohibits the use of automatic temperature compensators and automatic temperature and gravity compensators, and *would additionally make clear that these items would not be grandfathered under the new equipment grandfathering section* (proposed § 3174.50). Because there are relatively few LACT systems that still employ automatic temperature compensators or automatic temperature and gravity compensators, the BLM believes not grandfathering these items would not result in any significant costs to industry. In addition, because automatic temperature compensators or automatic temperature and gravity compensators used in LACT units do not meet the independent verification requirements of this subpart, they are not eligible for grandfathering. The BLM seeks comment on its assumption that not grandfathering this equipment would not result in significant costs to industry.

Proposed § 3174.90(e) would require the operator to notify the AO by Sundry Notice within 30 days after repair of any LACT system failures or equipment malfunctions that may have resulted in measurement error. Existing § 3174.7(e) requires operators to notify the AO within 72 hours of a LACT failure that may have resulted in measurement error. Industry has expressed concerns with the 72-hour timeframe as being difficult to comply with, in that it may not be possible to notify the BLM about a failure within 72 hours while troubleshooting or repair operations might still be taking place. The BLM finds this to be a valid concern and, considering the trend towards implementing ELM in LACT systems and the audit capabilities of these ELM systems, the BLM believes a repair notification would still provide the BLM with the capability to ensure all production has been accounted for. The BLM believes a notification of LACT repair would provide the same regulatory benefit as a 72-hour notification of a LACT failure.

Proposed § 3174.90(f) would have the same language for tests conducted on oil samples extracted from a LACT system sampler for determination of sediment and water (S&W) content and observed oil gravity as found in existing § 3174.7(f). This proposed rule would update regulatory citations to match proposed numbering changes for this subpart where referring to determination of S&W and observed oil gravity requirements.

Proposed § 3174.90(g) would require an average temperature to be calculated for the measurement period covered under the measurement ticket and require this average temperature to be used in determining the correction for the effect of temperature on a liquid (CTL correction factor). This proposed language would add clarification with respect to the time period for calculating the temperature average, *i.e.* the measurement period covered under the measurement ticket. Existing § 3174.8(b)(6)(vi) states that the average temperature calculated since the measurement ticket was opened must be used in determining the CTL correction factor. There has been confusion within the BLM as to whether this requires averaging for the entire period covered by the measurement ticket or a short period of time from the opening of the measurement ticket could be used for an average temperature calculation. The BLM believes this proposed change adequately clarifies the intent of the existing requirement without imposing any additional burden on the operators.

Proposed § 3174.90(h) would add new pressure determination requirements in order to clarify when a pressure transducer would be required instead of a pressure gauge. The BLM believes there are circumstances where a pressure transducer should be required for higher accuracy. These circumstances pertain to ELM use and automatic-adjusting back-pressure valves. Existing § 3174.8(b)(5) requires a pressure-indicating device be installed and used to provide pressure data for calculating the CPL correction factor. This language is vague and has created confusion both within industry and the BLM with respect to what is meant by ''pressure-indicating device.'' Some interpreted this to mean a pressure gauge while others believed a pressure transducer is required. The BLM believes this proposed change adequately clarifies the conditions under which a pressure gauge would be allowed, and when a pressure transducer would be required. The BLM believes this change would impose minimal additional burden on operators, as the use of ELM and automatic-adjusting back-pressure valves are optional on high-volume FMP LACT systems, while providing the benefit of higher accuracy measurement.

Proposed § 3174.90(i) is similar to existing § 3174.8(b)(7), which requires the calculation of net standard volume for each measurement ticket. However, the proposed rule would give operators the flexibility to use other methods of calculation with BLM approval.

Proposed § 3174.90(j) restates the requirement of existing § 3174.7(c), which pertains to completing measurement tickets.

3174.100 LACT Systems—Components and Operating Requirements

This section introduces the LACT component and operational requirement sections of this rule, specifically proposed §§ 3174.101 through 3174.108. This section constitutes a change from the existing § 3174.8(a) and (b) in that the BLM has decided not to incorporate the API 6.1 standards for equipment and operational requirements, but rather to list the minimum components and their respective operational requirements, similar to Onshore Order No 4. When subpart 3174 was initially proposed, it

listed LACT system components like Onshore Order No 4. However, the BLM received numerous comments stating that the rule should reference API 6.1 rather than list each component. Since subpart 3174 was published, many within the BLM have expressed confusion over what constitutes the minimum equipment requirements within the API standard. Existing subpart 3174 says a LACT must include all the equipment listed in API 6.1. In API 6.1, the reference to LACT components consists of a diagram that lists several pieces as ''optional.'' Existing subpart 3174 therefore arguably removes any flexibility industry may need in LACT construction and operation. Many of the listed components in API 6.1 are not necessary for determining quality and quantity of oil measured, and the BLM does not believe they should be considered mandatory equipment.

3174.101 Charging Pump and Motor

This is a new section that does not have a corollary in existing subpart 3174. This section would require operators to install a charge pump and motor if the static head is insufficient to provide a net positive suction to achieve fluid pressure compatible with the oil fluid properties. Oil must be maintained under enough pressure to ensure the oil is above its bubble-point pressure to prevent gas flashing within the system. In order to meet this, the oil must be ''pushed'' through the system, not ''pulled'' by some downstream means of suction.

3174.102 Sampling and Mixing System

Sampling and mixing system requirements are currently located in existing § 3174.8(b)(1). This proposed rule seeks to replace the current requirement for testing, pursuant to API 8.2. Existing § 3174.8(b)(1) requires all sampling systems, even those of the same design and construction to be individually tested. Operators expressed concern that compliance with this requirement to test all sampling systems, even those of the same design and construction, is unnecessarily burdensome and provides no benefit to the Federal Government. It is common for the same sampling-system design to be installed in many LACT units. The BLM agrees with this assessment and seeks to change the regulation to bring it in line with other equipment standards in the regulation and allow for a single test per design. The *www.blm.gov* website would list approved systems allowed on any location. The proposed change would reduce the overall burden to operators and simplify the inspection process for the BLM.

Proposed § 3174.102(a) would use identical language found in § 3174.8(b)(1) for sample extractor probe requirements, with the exception of § 3174.102(a)(3), which would clarify the sample-probe requirements found in § 3174.8(b)(1)(iii). The BLM has received numerous questions from operators and inspectors about the current sample-probe marking requirement. The proposed changes would reduce confusion with respect to the marking of the sample probe. The intent of the current regulation is that the direction of the opening of a bevel cut probe be marked on the probe body. The proposed rule states this requirement more clearly.

Proposed § 3174.102(b) and (d) contain new requirements not found in the current rule concerning sampling frequency and mixing system objectives. These additions would further clarify the sampling requirements in order to address questions received from operators.

Proposed § 3174.102(c) would expand on language found in § 3174.8(b)(3) for sample container requirements. In addition to retaining the current language requiring the sample container be emptied and cleaned upon completion of sample withdrawal, this proposed rule would also add language for holding the sample under pressure and being equipped with a vapor-proof top closure to prevent the unnecessary escape of vapor. This additional language would further clarify sample container requirements to address questions received from operators.

3174.103 Air Eliminator

This section does not have a corollary in existing subpart 3174. This section would require operators to install an air eliminator to prevent gas or air from entering the meter and causing mismeasurement of oil. The proposed rule would also allow the air eliminator to be integrated with an optional strainer device should an operator choose to configure the LACT this way.

3174.104 LACT Meter

The existing regulation at § 3174.8(a)(1) allows for the use of positive displacement (PD) and Coriolis meters on LACT units. The proposed rule would also allow for other meter types approved by the BLM. The BLM recognizes that other technologies could now, or in the future, meet the BLM's performance requirements for use on LACT units. This change would clarify how such technologies could be incorporated into the BLM's regulatory process.

Proposed § 3174.104(a) clarifies the non-resettable totalizer requirement of existing § 3174.8(b)(4). The proposed rule would make it clear that the non-resettable totalizer display may reside in an electronic flow computer. The non-resettable totalizer could display through the flow computer, but the output must be from the meter. The BLM has recognized that some flow computers have the capability to generate totalizer readings from the flow computer itself. The intent of the existing regulation is that the meter must generate the values for the non-resettable totalizer. The proposed rule would clarify this intent while ensuring that operators have the convenience of displaying the meter reading through the flow computer.

3174.105 Electronic Temperature Averaging Device

The BLM's requirements for electronic temperature averaging devices are currently located in existing § 3174.8(b)(6). This proposed rule would clarify a point of confusion in the existing regulation by specifying in proposed § 3174.105(f) that the BLM would allow a flow computer to perform the temperature averaging. The change makes clear that the regulation allows for stand-alone temperature averaging devices or temperature transmitters working in conjunction with a flow computer. Pursuant to proposed § 3174.105(a), a stand-alone temperature-averaging device would require PMT review and BLM approval. Similarly, under proposed § 3174.105(b), a temperature transducer must have received BLM approval. The approved equipment list at *www.blm.gov* would identify the makes and models of approved stand-alone temperature-averaging devices and temperature transducers.

3174.106 Pressure-Indicating Device

The existing regulation, under § 3174.8(b)(5) and § 3174.9(e)(1), allows operators to use a pressure transmitter on LACT systems and requires a pressure transmitter for CMS, but is silent on the approval process for that equipment. A requirement for pressure-transmitter approval is only referenced indirectly in existing § 3174.1, the definitions section. The proposed change would remove any confusion by spelling out the requirements within this section.

The BLM has heard from operators and BLM inspectors that the language in the existing regulation on placement of the pressure-indicating device is not

clear. The proposed rule would clarify this requirement with new wording on pressure-indicating device placement. The concern pertained to LACT units where the pressure-indicating device was placed in the tee of the prover connection. Some inspectors and operators interpreted the wording of the existing regulation to disallow this placement. This was not the BLM's intent; therefore, the proposed change to the wording in § 3174.106(a) would require the placement between the downstream side of the meter and the upstream side of the first valve in the prover connection. This change would assist in uniform enforcement of the regulation.

3174.107 Meter-Proving Connections

This proposed section does not have a corollary in existing subpart 3174. This section specifies requirements for meter-proving connections, including a leak detecting double block and bleed-valve configuration. Existing subpart 3174 does not reference meter-proving connections or leak-detection systems and instead incorporates the API 6.1 standard, which is not sufficiently specific. Leak detection during the proving process is critical to determining an accurate meter factor. Any leakage through the prover loops will result in a meter factor that incorrectly adjusts for meter performance, potentially resulting in measurement bias, which could result in a loss of royalty.

3174.108 Back-Pressure and Check Valves

This section would retain existing § 3174.8(a)(3)'s requirement for operators to have back-pressure valves or other controllable means of applying back pressure on their LACT systems. Proposed § 3174.108 would also provide operators with the option of installing an automatic-adjusting back-pressure control to handle changing flowing conditions downstream. This option is being proposed because this technology has shown positive results in both meter performance and proving operations during field operations. LACTs that flow into constantly changing downstream pressures showed repeatability problems during proving operations. Provings performed on LACTs with automatic-adjusting back-pressure control equipment have not shown the repeatability problems that are found on systems that have a fixed-setting back-pressure valve when downstream pressures constantly change.

3174.110 Coriolis Meter Operating Requirements

This section would provide operating requirements for the Coriolis meter—whether it is a stand-alone unit or is part of a LACT—and its transmitter. This section would remove the provision pertaining to meter specifications in existing § 3174.10(b) and would keep or modify the remaining paragraphs of existing § 3174.10.

Proposed § 3174.110(a) and (b) would require Coriolis meters and Coriolis transmitters to be on the approved equipment list at *www.blm.gov.* The proposed paragraph (a) requirement is currently located in existing § 3174.9(b). Proposed paragraph (b) is new and it would allow for a Coriolis transmitter to have a separate approval from a Coriolis meter. A Coriolis meter is always used in conjunction with a transmitter. The BLM believes that this proposed change will alleviate concerns that each meter and transmitter combination would require additional individual approval. The BLM is seeking comments on how this can be achieved in practice. Specifically, the BLM requests comment from the public on the following:

(1) How would a Coriolis meter be tested without a transmitter?

(2) Does the performance of a Coriolis meter change based on the type of transmitter installed?

(3) How would the BLM prevent the transmitter performance contributing to the meter uncertainty twice—first if a transmitter is required to test the Coriolis meter and second if a transmitter is tested separately?

(4) Is there data to support the position that a transmitter's contribution to meter uncertainty is insignificant and therefore will not change a Coriolis meter's uncertainty?

Proposed § 3174.110(c) is the same as existing § 3174.10(a).

Proposed § 3174.110(d) would clarify the requirement for the non-resettable totalizer that is currently located in existing 3174.10(c) by stating that the non-resettable totalizer display may reside in an electronic-flow computer, but it must be generated by the Coriolis meter. It further clarifies that a flow-computer generated totalizer would not fulfill the requirements of subpart 3174.

Proposed § 3174.110(e) would clarify existing § 3174.10(d) by specifying when a meter-verification procedure must be conducted. Existing § 3174.10(d) does not specify when the zero-verification procedure must be conducted. This rule would clearly state that a meter zero verification would need to be conducted during the proving process and at any time the AO would request it. Two minor changes would be made in the fourth sentence of proposed § 3174.110(e): Adding the word ''reading'' after the word ''zero,'' which was inadvertently left out of the next-to-last sentence of existing § 3174.10(d), and changing a cross reference.

Proposed § 3174.110(f) would require the same on-site display requirements of existing § 3174.10(e)(1) and (2) with exception of moving the instantaneous pressure reading and the instantaneous temperature reading requirements to proposed § 3174.120(b), and revising the requirement to display the gross standard volume and indicating this as the non-resettable totalizer reading. The non-resettable totalizer is a reading of the indicated volume. The rule would change the display requirement under § 3174.110(f)(iv) and (v) to require indicated volumes.

3174.120 Electronic Liquids Measurement, ELM (Secondary and Tertiary Device)

This proposed section applies to flow computers (ELM systems) that are connected to Coriolis meters and their transmitters. Although this section does not have a direct corollary in existing subpart 3174, it contains many of the same requirements that appear in the existing Coriolis meter regulations at § 3174.10. ELM systems take and utilize the data that Coriolis-meter transmitters feed them to make calculations and corrections. Not all Coriolis meters use ELM systems. The existing Coriolis meter regulations at § 3174.10 have caused some confusion in the regulated community as to whether operators are required to use ELM systems with their Coriolis meters. The BLM hopes to eliminate this confusion by separating out the ELM systems requirements in proposed § 3174.120 from the Coriolis meter requirements at proposed § 3174.110.

The existing regulation requires operators to use a tertiary device (flow computer and associated memory, calculation, and display functions) for all CMS FMPs. This existing requirement is mentioned minimally in the definitions section at existing § 3174.1, under the definition for Coriolis measurement system (CMS), and provides little in the way of details for this requirement. The proposed changes bring the software-testing requirements for electronic oil measurement in line with the requirements of electronic gas measurement in subpart 3175. The BLM believes that it is valuable to have uniformity in these requirements to

alleviate the burdens that having two differing test procedures would create only to achieve essentially the same results. Since the electronic oil measurement system software performs calculations that directly affect royalty reporting, the BLM has deemed it critical to ensure that the software meets the performance standards of the regulation. The proposed rule would specify the requirements for ELM systems and remove any ambiguity in the existing regulation.

3174.121 Measurement Data System (MDS)

This section does not have a corollary in existing subpart 3174. This section would establish that measurement data systems (MDS) must be approved by the BLM for use at an FMP. MDS are designed to gather, edit, store, and report measurement data. The BLM has developed a test procedure that compares raw data retrieved from a flow computer directly to both edited and unedited data obtained from the MDS under test. The BLM would assess this data to ensure that the internal correction and volume calculations comply with the appropriate incorporated API standards for sequence and rounding, that raw data is preserved and maintained, and that edited data is clearly indicated as such. By requiring that MDSs be BLM approved, industry would not have any questions or confusion when selecting an MDS system for use at an FMP. This section would also allow the BLM to approve and list alternative methods of calculating net standard volume on the *www.blm.gov* website. Measurement data systems would not be subject to the exemption provided for in proposed § 3174.50(a) and would have to be approved by the BLM prior to use.

3174.130 Coriolis Measurement Systems (CMS)—General Requirements and Components

The BLM's general requirements for Coriolis measurement applications independent of LACT measurement systems are currently located in existing § 3174.9. This proposed rule would only make minor changes to the requirements of existing § 3174.9.

Paragraph (b) would require each CMS to utilize an ELM and follow the requirements of proposed § 3174.120. This is intended to reflect the new ELM section at proposed § 3174.120, and would not impose burdensome additional requirements since the ELM section is comprised primarily of existing requirements that are found in existing § 3174.10. These organizational changes are intended to make the requirements clearer and provide a better organization of the requirements.

Paragraph (e) would add a new provision (§ 3174.130(e)(5)) to require block valves at both ends of the system in order to allow for zero-flow verification.

Paragraph (g) would update the API standard reference for calculating net standard volume and include a provision to allow for alternative methods of calculating net standard volume that the BLM may approve and list on the *www.blm.gov* website.

Paragraph (h) would clarify the requirements for CMS units that are attached to oil-hauling trucks or trailers that move between oil-loading locations. Paragraphs (h)(7) and (8) would clarify that each truck load using a Truck Mounted Coriolis (TMC) CMS would require the seal on the sales valve to be replaced. This is to avoid confusion with the § 3173.20 seal requirement for multi-truck loads. The intent of that section of § 3173.20 is to deal with loads on multiple trucks that are recorded on a single run ticket. As each TMC would record a truck load on an ELM system attached to that truck, the seal on and off would need to be recorded for auditing purposes.

The BLM is seeking comment on the total system performance that would be achievable for both truck mounted CMS and systems that are placed at the dumps of separators.

3174.140 Temporary Measurement

The BLM is proposing to add a new § 3174.140 to address temporary measurement. Temporary measurement is defined in 43 CFR 3170.10 as a meter that is in place for less than 3 months and measures oil on which royalty is owed. Temporary measurement typically applies to an oil meter that is part of a measurement skid used to measure the production from a newly completed well before the permanent measurement facility is installed. The existing rule does not address temporary measurement.

Under proposed § 3174.140, a temporary oil meter would have to meet all the requirements of an FMP with some modified requirements based on the limited timeframe the meter will be on the location (for example, proving requirements).

3174.150 Meter-Proving Requirements

This section introduces the eight following sections that specify the minimum requirements for conducting volumetric meter proving for all FMP meters (§§ 3174.151 through 3174.158). A meter proving is the procedure used to determine a meter factor required to calculate the volume of liquid measured through a meter. Currently all proving requirements are found in existing § 3174.11. By separating these requirements into sequential sections, the BLM believes this will make identifying and citing the specific requirements less burdensome for both industry and the BLM.

3174.151 Meter Prover

Proposed § 3174.151 maintains the existing meter-prover requirements found in existing § 3174.11(b) and includes new language that would add flexibility for additional meter provers as new technology emerges.

Under existing § 3174.11(b), acceptable provers are PD master meters, Coriolis master meters, and displacement provers. These are the only meter provers identified as acceptable to the BLM at this time. Since publication of the existing regulations, industry has recommended that the BLM maintain the flexibility to accept future meter-proving methods and technology. This proposed rule would still recognize positive-displacement master meters, Coriolis master meters, and displacement provers as automatically accepted, but would also include the flexibility for the BLM to approve other provers. The BLM is proposing this addition to support the development of new technologies and procedures that meet the performance requirements of the regulation but that are not known or available at the time this proposed rule becomes final.

The BLM is seeking comments on other proving technologies or procedures that are not presented in this proposed rule, but that meet its requirements.

3174.152 Meter-Proving Runs

Proposed § 3174.152(a) would modify the proving requirements currently located in existing § 3174.11(c)(1) based on feedback from operators and BLM inspectors on the enforceability of the existing regulation. Existing § 3174.11(c)(1) requires meter proving to be performed under normal operating fluid pressure, fluid temperature, and fluid type and composition. BLM inspectors have found it difficult to define a ''normal operating'' range and so enforcing this requirement has become burdensome. Therefore, the proposed rule would use the proving conditions at the time of proving to define the ''normal operating'' range for the period between the provings of the meter. This would allow inspectors to use proving reports from the previous period to ensure that the unit has stayed within the normal operating span for

that period. The limits of the ''normal range'' would remain the same as the current regulation, but with the ''normal'' point defined by the conditions at the time of proving. Whatever the flow rate, pressure, temperature, and API gravity the meter is proven at would become the new ''normal'' operational points, and the unit would have to maintain operation within 10 percent of that defined value for flow rate and pressure, 10 °F of the temperature, and 5 degrees API for the gravity. The BLM seeks comments on these ranges and any supporting data that may show that the range should, without affecting the meter factor, be wider or narrower. The proposed changes also would address short-term changes in conditions that might occur between proving cycles. The intent of the existing regulation is not to require multiple meter provings for short-term operations like pigging or temporary spikes in temperature. Therefore, the proposed rule defines a period of time necessary for a change in operating conditions to require a proving.

Since publication of the existing subpart 3174 regulations, industry has expressed concerns about the requirement of ''normal'' operating conditions for proving and has asked the BLM to consider a meter's linear range as a replacement for a ''normal'' operating condition requirement during proving operations. This proposed rule would address concerns on how ''normal'' operating conditions would be determined and used. The BLM is not familiar enough with the meter linear range concept to include it in this proposed rule, and instead requests that industry provide data on how to determine a meter's linear range and how this could be applied to meter provings.

Proposed § 3174.152(b) reproduces the requirement of current § 3174.11(c)(2) requiring the use of pulse interpolation in accordance with API 4.6 if each proving run is not of sufficient volume to generate at least 10,000 pulses.

Under existing § 3174.11(c)(3), proving runs must be made until the calculated meter factor or meter generated pulses from five consecutive runs match within a tolerance of 0.0005 (0.05 percent) between the highest and the lowest value. In field proving conditions, like separator-mounted CMS where limited volumes of proving fluid is available, this has shown to be difficult to achieve. Proposed § 3174.152(c) would incorporate all the language from current § 3174.11(c)(3), and would expand on the allowable runs for a meter proving. The BLM recognizes that the API 4.8 standard provides a table for various runs and repeatability that meet a 0.027 percent uncertainty. Therefore, the proposed rule would incorporate that table into the regulation to allow greater proving flexibility while keeping the same performance standard for the proving.

Proposed §§ 3174.152(d), (e), (f), and (g) would incorporate all the language from existing §§ 3174.11(c)(4), (5), (7), and (8) for meter factor computations and acceptable meter factors ranges.

Proposed § 3174.152(h) would incorporate the language from existing § 3174.11(c)(6) for the use of multiple meter factors determined over a range of normal conditions. The BLM has not received much feedback on this provision in the existing regulations and does not know whether operators are using this method or if it can be applied to field operations. The BLM requests comments on this provision, including supporting data showing whether this concept is feasible for use at FMPs, needs additional refinement, or is not feasible and should be removed from the rule.

Proposed § 3174.152(i) would combine and expand on the language found in existing § 3174.11(c)(9) and (10) relating to back-pressure adjustments and composite meter factors. The existing rule separates the requirements for back-pressure valve adjustments at the conclusion of proving operations and composite meter-factor use.

There has been confusion within the BLM and industry as to what back-pressure adjustments are allowed under the existing regulations after proving a meter. The existing regulation states that back-pressure-valve adjustment is only allowed on PD meters. This was based on a BLM misconception about how Coriolis meters would be used; the BLM now realizes that the existing rule does not cover all possible LACT configurations. This proposed rule would allow automatic-adjusting back-pressure systems, which would resolve confusion concerning back-pressure-valve adjustment after proving.

The proposed rule would place restrictions on back-pressure adjustments when an operator chooses to use a composite meter factor. The existing rule only allows composite meter factors with PD meters. The BLM thought that Coriolis meters, whether used in a LACT or CMS, would have flow computers installed on them that would utilize a pressure transducer for live pressure readings when determining the CPL. The BLM now understands that operators use Coriolis meters in LACTs that do not have flow computers installed and want to use composite meter factor in these situations. These LACT systems are intended to flow at steady pressures with fixed-setting back-pressure valves. The BLM realizes that the existing rule does not cover this Coriolis/LACT configuration. The proposed rule would allow composite meter factors to be used with any meter, PD, Coriolis, or any other meter the BLM may approve, but would restrict a LACT using a composite meter factor to require fixed-setting back-pressure valves, and would include limitations to back pressure adjustments

3174.153 Minimum Proving Frequency

The BLM's requirements for minimum proving frequency are currently located in existing § 3174.11(d). This proposed section would essentially retain the current requirements of existing § 3174.11(d), with the two following modifications.

Under existing § 3174.11(d)(1), the operator must prove the FMP meter before production is removed or sold following initial meter installation. Industry has questioned the timing of this requirement and has requested that the BLM give operators more time before requiring them to conduct the initial proving. The BLM has considered this request and agrees that more time can be given without any negative impacts to measurement accuracy. Proposed § 3174.153(a) would require that an FMP meter be proved within 15 days after the first flow after installation of the FMP meter. The BLM believes an additional 15 days would be enough time to fill all load lines and ensure proper meter functioning. A meter factor can be applied to measured volumes from the first flow through the time of closing the measurement ticket. An additional 15 days from first flow through a meter would not affect volumes reported for royalty determination.

Under existing § 3174.11(d)(4), the operator must prove the FMP meter when any event in which modification of mounting conditions occurs at the FMP meter. Industry seems to misunderstand the meaning of the general statement ''modification mounting conditions'' as it pertains to an event that would require an FMP meter to be proved before removal or sales of production. Proposed § 3174.153(d) would require that an FMP meter be proved prior to removal or sales of production whenever the FMP meter is removed and reinstalled at the FMP. The BLM is proposing to simplify the existing language by saying:

''removal and reinstallation of the meter'' rather than ''modification of mounting conditions.'' This proposed change would address industry's confusion and still achieve the outcome of the proving frequency requirement.

3174.154 Excessive Meter Factor Deviation

This proposed section would expand upon the provisions currently located in existing § 3174.11(e). This rule would clarify existing language that defines excessive meter factor deviation. The existing rule considers any two successive provings where the meter factors differ by ±0.0025 or more, as excessive. There has been confusion over what is meant by ''successive.'' In an attempt to address this confusion, the term ''successive'' would be replaced by ''consecutive.''

Proposed § 3174.154(a) is a new section that is being proposed to address an omission in the existing rule. Onshore Order No. 4 allowed an operator to provide an explanation to the BLM that an excessive-meter factor was not caused by a meter malfunction. The existing regulation does not include this option and, at existing § 3174.11(e), requires the operator to remove a meter from service no matter the cause of the excessive meter factor. The BLM has received many questions about why this option was not retained in subpart 3174. The primary explanation for an excessive meter factor, other than meter malfunction, is changing conditions, such as temperature, gravity, or flow rate. The intent of the existing regulation is that a meter must be proven if any one of the conditions, temperature, pressure, gravity, or flow rate changes beyond the normal range as defined in § 3174.11(c)(1). Proposed § 3174.152(a) would refine this normal range criteria (as discussed in the § 3174.152(a) preamble section). The proposed changes to the normal condition would eliminate excessive meter-factor deviation caused by changing conditions because proposed § 3174.153(f) would require the operator to prove any FMP meter before a change in the flow rate, pressure, temperature, or gravity becomes severe enough to cause excessive meter factor deviation. The BLM is proposing to allow an operator to provide an explanation to the BLM that an excessive-meter factor was not caused by a meter malfunction because the BLM believes that it is appropriate to give operators the opportunity to explain an excessive meter factor on a case-by-case basis.

Proposed § 3174.154(b) uses language that is combined from existing § 3174.11(e)(1) and (3). This proposed section would require an operator to remove a meter from service when a meter malfunction causes an excessive meter factor or when an operator does not provide, or the AO does not approve, an explanation for the excessive meter factor. This section would also include language that requires an operator to provide a description of any meter repair or adjustment on the subsequent proving report.

Proposed § 3174.154(c) reflects existing § 3174.11(e)(2). This section would require the two consecutive meter factors to be averaged and applied to production measured between the dates of the two provings.

3174.155 Verification of the Temperature Transducer

The BLM's requirements for verifying temperature-transducer output are currently located in existing § 3174.11(f). In this proposed section, the verification requirements have not changed, but rather the language has been revised to include changes relating to the addition of the ELM section in the proposed rule. The primary changes to this section would be removing the reference to CMS and replacing it with a reference to ELM and changing all instances of ''the probe of the temperature averager'' to ''temperature transducer.''

3174.156 Verification of the Pressure Transducer (if Applicable)

This proposed section lists the requirements for verifying the pressure transducer output and would be nearly identical to the existing language in current § 3174.11(g). The BLM is not proposing any substantive change to subpart 3174's pressure transducer verification requirements.

3174.157 Density Verification (if Applicable)

This proposed section lists the requirements for verifying the density output from a Coriolis meter, and would be nearly identical to the existing language in current § 3174.11(g). The BLM is not proposing any substantive change to the density verification requirements of existing subpart 3174.

3174.158 Meter-Proving Reporting Requirements

Existing § 3174.11(i) contains meter-proving reporting requirements; however, this section does not clearly state what data operators must provide on a proving report. The existing language primarily requires operators to use proving forms that are available within two different API standards, and requires operators to provide some additional data covering lease number, meter ID number, the verification of the temperature and pressure transducers, and density verification. Proposed § 3174.158 would provide a detailed list of the specific data required and would specify a required calculation sequence to be followed in the meter factor calculation. API forms are identified only as available examples of proving-report formats.

Proposed § 3174.158(a) would retain the data requirements listed in existing § 3174.11(i)(2) and would add additional specific data that must be included on the list of minimum data required to be in a proving report. These additional data requirements would be the data that is currently found on the API forms referenced in current § 3174.11(i)(1). The BLM believes that providing this level of detail in the proposed proving-report requirements, rather than referring operators to the API example forms, would remove any confusion about the exact data that is required on the report. The proposed minimum-data list contains the data necessary for the BLM to clearly identify the FMP meter, conduct an audit, verify that proving operations obtained the correct data, and determine that meter-factor calculations are done correctly.

Proposed § 3174.158(b) would retain the data requirements listed in existing § 3174.11(i)(1), except for removing the reference to the example forms listed in the API standards. The reference to the API forms has created confusion with both industry and the BLM as to whether operators are required to use them or just provide the data within the forms in any format. Removing the reference and stating that any format would be acceptable is expected to clear up this confusion.

Proposed § 3174.158(c) would change the proving-report submission requirements of existing § 3174.11(i)(3) from requiring an operator to submit each report within 14 days after a meter proving to only requiring an operator to submit a proving report when requested by the AO. This change has been proposed to make this regulation less burdensome to industry while retaining the BLM's audit capabilities for verifying proving reports.

3174.160 Measurement Tickets

Proposed §§ 3174.160–162 would replace the measurement ticket requirements contained in existing § 3174.12. Proposed § 3174.160 provides an overview of the following two sections that require information that must appear on measurement tickets prior to oil-volume reporting on the

OGOR. The proposed rule would separate out the measurement-ticket requirements into individual sections according to the measurement type, tank gauging, and LACT or CMS. This prosed rule would retain the existing requirement that measurement tickets be made available upon request of the AO. The BLM believes this requirement is the least burdensome on industry while retaining the BLM's audit capabilities for verifying volume and quality.

3174.161 Tank Gauging Measurement Ticket

Under proposed § 3174.161, the tank-gauging measurement-ticket section would reorganize the required measurement-ticket information into two categories—one for field-data gathering operations and another for measurement-ticket calculations. There has been confusion within industry and the BLM over the existing requirements when documenting tank-gauging operations. Some BLM personnel believe a complete measurement ticket, including all temperature and density corrections and calculations, must be filled out by the operator, purchaser, or transporter at the time of the gauging operations. This proposed rule would clarify which data would be required to be documented at the time of the gauging operation in the field and what calculations could be done later.

Proposed § 3174.161(a) would replace parts of existing § 3174.12(a). This proposed section would specify the field-data gathering and documentation requirements. For field-data gathering, the proposed rule would include existing requirements from § 3174.12(a) and with the additional requirement that operators document the FMP location information as required under § 3170.50(g). Many within the BLM have been requesting that operators provide location data on their measurement tickets so they can identify the location of the FMP where the tank-gauging took place. Therefore, this proposed rule would include the location information requirement.

Proposed § 3174.161(b) would replace parts of existing § 3174.12(a). This proposed section would clarify the calculations and corrections that the operator must complete and document on the run ticket for tank gauging. The existing rule was not specific with respect to the correction of the API gravity to 60 °F, and whether it must include the glass thermal expansion equation when using a hydrometer or thermohydrometer for gravity determination. The proposed rule would require the API oil gravity at the 60 °F correction to include the glass thermal expansion equation. The proposed rule would eliminate the gross standard volume recording and proposes to require the total net standard volume be recorded. Many in industry and the BLM have questioned why net standard volume is not required to be calculated in the existing rule. This was an oversight. The existing regulation should have required operators to document it on the measurement ticket. Operators are already required to report net standard volumes on their OGORs.

3174.162 LACT System and CMS Measurement Ticket or Volume Statement

Proposed § 3174.162 would reorganize the required information into two categories—measurement tickets and volume statements. Existing § 3174.12(b) only allows the operator to use a measurement ticket while proving a LACT system. Since the proposed rule would allow operators to use ELM and MDS systems, a second category for volume statements would be necessary. The BLM believes both of these categories would provide the audit capabilities required for verifying volume and quality.

Proposed § 3174.162(a) would retain the existing measurement-ticket requirements in § 3174.12(b) and introduce two additional requirements. The proposed rule would require in § 3174.162(a)(1) the location information found in § 3170.50(g) be documented and would require in § 3174.162(a)(11) the net standard volume be calculated and documented.

Proposed § 3174.162(b) would be a new section that would accommodate the ELM systems and MDS systems. This section would allow for volume statements rather than measurement tickets for the documentation of the flow data and calculations to net standard volume. The volume statement would be generated from the ELM or MDS using unaltered, unprocessed, and unedited daily or hourly QTRs, and would require the information found in the API 21.2 standard. The volume statement would additionally be required to include the information listed in § 3170.50(g).

Proposed § 3174.162(c) would retain the existing requirements in § 3174.12(b)(2) that any accumulators used in the determination of average pressure, average temperature, and average density be reset to zero whenever a new measurement ticket is opened. It would also add the term ''measurement period'' to clarify the timeframe that would apply to this requirement.

3174.170 Oil Measurement by Other Methods

Oil measurement by other methods is currently addressed in existing § 3174.13. Most of the content of existing § 3174.13 is proposed to be moved to § 3170.30. This change would eliminate duplicate language on the process of applying for BLM approval of alternative equipment and methods through the PMT review process from subpart 3174 and relocate it to subpart 3170, which is common to all the part 3170 regulations. The existing § 3174.13(a) language about prior BLM approval has been modified and retained in proposed § 3174.170. The proposed modification would remove references to tank gauge, LACT, and CMS and instead clarify that any method of oil measurement other than those addressed in this rule or listed on the *www.blm.gov* website require BLM approval.

3174.180 Determination of Oil Volumes by Methods Other Than Measurement

This proposed section essentially reproduces existing § 3174.14. This section addresses how spilled oil, waste oil, and slop oil must be reported to the AO. Existing § 3174.14 says an operator may not sell or otherwise dispose of slop oil without prior written approval. Proposed § 3174.180 would require an operator to get prior written approval from the BLM for a sale or disposal of slop oil and also require the operator to notify the BLM via Sundry Notice of the volume sold or disposed. This change would ensure that a tracking and auditing mechanism for spilled oil, waste oil, and slop oil exists.

3174.190 Immediate Assessments

The BLM has reviewed existing immediate assessments in § 3174.15 and is proposing to remove the immediate assessment for the failure to notify the AO of a LACT system failure or equipment malfunction within 72 hours that resulted in the use of an unapproved alternative measurement method (existing § 3174.15, violation 2). There has been confusion as to whether the immediate assessment should be for a failure to notify within 72 hours of a LACT system failure or equipment malfunction, or whether it should be for the use of an unapproved alternative measurement method. Existing § 3174.7(e)(1), requiring the 72-hour notification, would be revised under proposed § 3174.90(e) so that the notification would be required within

30 days after repair of any LACT system failures or equipment malfunctions that may have resulted in measurement error, not when there is an initial failure. To be clear, there is no grace period for the use of unapproved equipment in the current or proposed rules. The use of an unapproved alternative measurement method would be covered by the immediate assessment for failure to obtain approval as required by proposed § 3174.170. There are no changes proposed for the remaining existing four immediate assessments.

4. Section-By-Section Discussion for Changes to Subpart 3175

This proposed rule would renumber and rename some of the sections in existing subpart 3175. This change is needed to reflect that this proposed rule would consolidate a number of existing sections into new sections, and add one new section and a new Appendix. The following table provides a cross-walk comparison of the proposed § 3175 numbering to the current subpart 3175 numbering. New proposed sections have ''New'' identified in the existing § 3175 column.

Existing § 3175	Proposed § 3175
3175.10 Definitions and acronyms	3175.10 Definitions and acronyms.
3175.20 General requirements	3175.20 General requirements.
3175.30 Incorporation by reference (IBR)	3175.30 Incorporation by reference (IBR).
3175.31 Specific measurement performance requirements	3175.31 Specific measurement performance requirements.
3175.40, 3175.43, 3175.44, 3175.46 through 3175.49	3175.40 Measurement equipment requiring BLM approval.
3175.41, 3175.42, 3175.45	3175.41 Approved measurement equipment.
New	3175.43 Data submission and notification requirements.
3175.61 Grandfathering	3175.50 Grandfathering.
3175.60 Timeframes for compliance	3175.60 Timeframes for compliance.
3175.70 Measurement location	3175.70 Measurement location.
3175.80 Flange-tapped orifice plates	3175.80 Flange-tapped orifice plate.
3175.90 through 3175.94 Mechanical recorders	3175.90 through 3175.94 Mechanical recorders.
3175.100 through 3175.104 Electronic gas measurement	3175.100 through 3175.104 Electronic gas measurement.
3175.110 through 3175.121 Gas sampling and analysis	3175.110 through 3175.121 Gas sampling and analysis.
3175.125 Calculation of heating value and volume	3175.125 Calculation of heating value and volume.
3175.126 Reporting of heating value and volume	3175.126 Reporting of heating value and volume.
3175.130 through 3175.135 Transducer testing protocol (removed)	3175.130 Requirements for GSAMPs.
3175.140 through 3175.144 Flow computer software testing (removed)	3175.140 Temporary Measurement.
3175.150 Immediate assessments	3175.150 Immediate assessments.
Appendix A—Atmospheric pressure	Appendix A—Atmospheric pressure.
New	Appendix B—Maximum time between events.

3175.10 Definitions and Acronyms

Proposed § 3175.10 would clarify the definition of ''Beta ratio.'' In the existing regulation, ''Beta ratio'' is defined as the ''measured diameter of the orifice bore divided by the measured inside diameter of the meter tube,'' without specifying which measured diameter to use. The proposed definition would clarify that the ''reference inside diameter'' (defined in proposed § 3175.10) is required for determining the beta ratio.

This rule would relocate the definition of ''Configuration log'' to 43 CFR 3170.10, which contains definitions that are used in more than one subpart of part 3170. ''Configuration log,'' which is a list of programmable information used in electronic flow computers measuring oil or gas, is a term that is used in both subparts 3174 and 3175.

The BLM would also relocate the definition of ''Event log'' from § 3175.10 to the general definition section under 43 CFR 3170.10. The BLM is proposing this change because the term ''Event log'' is used in both subparts 3174 and 3175.

The BLM is proposing to add a new definition for meters that are used in gas-storage agreements, which affect the determination of injection and withdrawal fees. This meter would be referred to as ''Gas storage agreement measurement points'' (GSAMP). The BLM is also proposing to add new requirements for these meters (see discussion of proposed § 3175.130 later in this preamble). Under the existing regulations, meters used for gas-storage agreements are not FMPs because the definition of an FMP is limited to meters or measurement facilities that affect the determination of royalty. Because injection and withdrawal fees are not the same as royalties, the meters that are used to determine them are not FMPs by definition. Most gas-storage-agreement contracts include language that requires injection and withdrawal meters to meet the standards found in the BLM's previous gas-measurement regulations known as Onshore Order No. 5, or subsequent regulations. However, this language is not consistent from agreement to agreement and has led to uncertainty over the BLM's authority to regulate these meters, especially under the existing subpart 3175 regulations. The BLM believes that accurate measurement and proper reporting is essential to ensuring the public receives the proper fees for the use of Federal or Indian land for gas-storage purposes. The proposed requirement would help the BLM achieve this goal.

Although most gas-storage areas use depleted oil and gas reservoirs to store gas, the gas withdrawn from a gas-storage agreement may still produce some gas and, in some cases, oil that was part of the original oil and gas deposit. This is often referred to as ''native'' oil and gas. Royalty is due on native oil and gas produced from Federal or Indian leases within the gas-storage agreement, just as it would be from any Federal or Indian lease. In these situations, the meters used to measure the withdrawn gas also measure some portion of native gas and oil. The definition of GSAMP clarifies that if the withdrawn gas contains native oil or gas, the meter measuring the withdrawn gas is an FMP and not a GSAMP. As such, the meter would have to comply with all applicable subparts 3173, 3174, and 3175 requirements relating to an FMP. It would be up to the BLM to determine if the meter is measuring only gas that was injected, in which case it would be a GSAMP, or gas that contains native oil or gas, in which case it would be an FMP.

In some cases where some native gas is produced, the gas-storage agreement specifies that the royalty on a set amount of native gas is prepaid. The

meter measuring the gas in this case would be considered a GSAMP until the amount of native gas on which the pre-paid royalty is based is exceeded, at which point the meter would become an FMP.

The BLM would add a definition of ''Nonanes-plus (C_9+) analysis,'' a gas analysis in which gas components from methane (C_1) to octane (C_8) are split and individually measured, and components of nonanes (C_9) and higher are lumped into a single grouping, because the term would be added to numerous sections of the rule and may not be consistently understood by all users. The existing regulation erroneously uses the term ''Extended analysis'' in conjunction with nonanes-plus. The BLM would eliminate the term ''Extended analysis'' in the proposed rule and would clarify that nonanes-plus (C_9+) analysis refers to a single grouping of all components that are heavier than octane (C_8).

This rule would change the definition of ''Normal flowing point'' to clarify that the normal flowing points at a particular FMP are the average values of differential pressure, static pressure, and flowing temperature taken over a 1-day to 31-day time frame. The existing definition of ''Normal flowing point'' does not define the normal flow point as an average over time and is not adequate for either the agency or the public to determine these values, resulting in inconsistent use and enforcement. The proposed change would provide a clear understanding of what a normal flowing point is and how it would be determined. The BLM uses the normal flowing points when witnessing the verification of mechanical recorders and electronic gas measurement systems and when determining overall measurement uncertainty.

This rule would add definitions for ''Published inside diameter'' and ''Reference inside diameter.'' Under the existing regulation, only the inside diameter of the meter tube is referenced, without clarifying which specific inside diameter is required. This has caused confusion for both operators and the BLM with respect to which diameter should be used for a given situation as required by this subpart. The BLM is proposing to define ''published'' and ''reference'' inside diameters of meter tubes to clarify when each of the defined inside diameters would be used in flow calculations and which would be used in table references for API MPMS 14.3.2 (Table 7, 8a, and 8b) to determine the minimum required meter tube lengths. The reason for this change is to achieve consistency with requirements and calculations in API MPMS 14.3.2, which is incorporated by reference. The published inside diameter is the standard inside diameter as found in engineering handbooks. For example, the published inside diameter for 2-inch, Schedule 40 pipe is 2.067 inches. The published inside diameter is used to determine the minimum required lengths of meter tubes and placement of 19-tube bundle flow straighteners and isolating flow conditioners, if used (see 3175.80(i) and (n)). The reference inside diameter is calculated by averaging multiple inside diameter measurements taken upstream of the orifice plate and then correcting that average to a reference temperature. The reference inside diameter is used in the flow-rate equation, as required by § 3175.103 in both the existing and proposed rules, and in the grandfathered flow-rate calculations defined in proposed § 3175.50(2)(c)(i) (existing § 3175.61(b)(2)).

The BLM would improve the existing definition of ''Upper calibrated limit'' by clarifying that it is commonly referred to in the oil and gas industry as ''span.'' The term ''upper calibrated limit'' was developed during the 2013 rewrite of gas standard API MPMS 21.1 and may not be familiar to the public. The addition of a reference to ''span'' would help readers who are more familiar with this term understand the new one.

3175.20 General Requirements

Existing § 3175.20 would be modified to reflect the new section numbering of the proposed regulation. Proposed § 3175.20(b) would be added to address the additional sections on Gas storage agreement measurement points (GSAMP).

3175.30 Incorporation by Reference (IBR)

Building on existing § 3175.30, this proposed section lists 15 industry standards, reports, and manuals that are proposed for incorporation by reference, either in whole or in part.

- AGA Report No. 3, Orifice Metering of Natural Gas and Other Related Hydrocarbon Fluids; Second Edition, September, 1985 (''AGA Report No. 3 (1985)''). This report provides construction and installation requirements, and standardized implementation recommendations for the calculation of flow rate through concentric, square-edged, flange-tapped orifice meters. This standard was previously approved for IBR and is unchanged.
- AGA Transmission Measurement Committee Report No. 8, Compressibility Factors of Natural Gas and Other Related Hydrocarbon Gases; Second Edition, November 1992 (''AGA Report No. 8 (1992)''). This report presents detailed information for precise computations of compressibility factors and densities of natural gas and other hydrocarbon gases, calculation uncertainty estimations, and FORTRAN computer program listings. This standard was previously approved for IBR and is unchanged.
- AGA Transmission Measurement Committee Report No. 8, Part 1, Thermodynamic Properties of Natural Gas and Related Gases, Detail and Gross Equations of State; Third Edition, April 2017 (''AGA Report No. 8 Part 1''). The part 1 is essentially the same computations of compressibility factors and densities of natural gas and other hydrocarbon gases, calculation uncertainty estimations, and FORTRAN computer program listings as the 1992 Second edition. This report is being proposed for incorporation because the BLM believes this revised standard would allow the use of a more accurate compressibility calculation while still retaining the older calculation for situations where the new calculation is not necessary or not practical.
- AGA Transmission Measurement Committee Report No. 8, Part 2, Thermodynamic Properties of Natural Gas and Related Gases, GERG–2008 Equation of State; First Edition, April 2017 (''AGA Report No. 8 Part 2''). This part 2 introduces a new and more accurate computation known as ''GERG–2008''. This report is being proposed for incorporation because the BLM believes this new and more accurate computation known as ''GERG–2008 should be allowed under the proposed rule.
- API MPMS Chapter 14—Natural Gas Fluids Measurement, Section 1—Collecting and Handling of Natural Gas Samples for Custody Transfer; Seventh Edition, May 2016; Addendum, August 2017; Errata, August 2017 (''API 14.1''). This standard provides comprehensive guidelines for properly collecting, conditioning, and handling representative samples of natural gas that are at or above their hydrocarbon dew point. There are no substantive changes to this standard; we are proposing to add approval for the new Addendum and Errata to this standard.
- API MPMS, Chapter 14, Section 3, Orifice Metering of Natural Gas and Other Related Hydrocarbon Fluids—Concentric, Square-edged Orifice Meters, Part 1, General Equations and Uncertainty Guidelines; Fourth Edition, September 2012; Errata, July 2013 (''API 14.3.1''). This standard provides engineering equations and uncertainty

estimations for the calculation of flow rate through concentric, square-edge, flange-tapped orifice meters. This standard was previously approved for IBR and is unchanged.

• API MPMS Chapter 14, Section 3, Orifice Metering of Natural Gas and Other Related Hydrocarbon Fluids—Concentric, Square-edged Orifice Meters, Part 2, Specification and Installation Requirements; Fifth Edition, March 2016; Errata 1, March 2017; Errata 2, January 2019) (''API 14.3.2''). This standard provides construction and installation requirements, and standardized implementation recommendations for the calculation of flow rate through concentric, square-edge, flange-tapped orifice meters. There are no substantive changes to this standard; we are proposing to add approval for the new Errata to this standard.

• API MPMS Chapter 14, Section 3, Orifice Metering of Natural Gas and Other Related Hydrocarbon Fluids—Concentric, Square-edged Orifice Meters, Part 3, Natural Gas Applications; Fourth Edition, November 2013 (''API 14.3.3''). This standard is an application guide for the calculation of natural gas flow through a flange-tapped, concentric orifice meter. This standard was previously approved for IBR and is unchanged.

• API MPMS Chapter 14, Natural Gas Fluids Measurement, Section 3, Concentric, Square-Edged Orifice Meters, Part 3, Natural Gas Applications, Third Edition, August, 1992 (''API 14.3.3 (1992)''). This standard is an application guide for the calculation of natural gas flow through a flange-tapped, concentric orifice meter. This standard was previously approved for IBR and is unchanged.

• API MPMS, Chapter 14.5, Calculation of Gross Heating Value, Relative Density, Compressibility and Theoretical Hydrocarbon Liquid Content for Natural Gas Mixtures for Custody Transfer; Third Edition, January 2009; Reaffirmed February 2014 (''API 14.5''). This standard presents procedures for calculating, at base conditions from composition, the following properties of natural gas mixtures: Gross heating value, relative density (real and ideal), compressibility factor, and theoretical hydrocarbon liquid content. This standard was previously approved for IBR and is unchanged.

• API MPMS Chapter 21.1, Flow Measurement Using Electronic Metering Systems—Electronic Gas Measurement; Second Edition, February 2013 (''API 21.1''). This standard describes the minimum specifications for electronic gas measurement systems used in the measurement and recording of flow parameters of gaseous phase hydrocarbon and other related fluids for custody transfer applications utilizing industry recognized primary measurement devices. This standard was previously approved for IBR and is unchanged.

• GPA Midstream Standard 2166–17, Obtaining Natural Gas Samples for Analysis by Gas Chromatography, Reaffirmed 2017 (''GPA 2166–17''). This standard recommends procedures for obtaining samples from flowing natural gas streams that represent the compositions of the vapor phase portion of the system being analyzed. This standard is being proposed for incorporation because, since the existing regulation published in November 2016, the GPA published a revised standard, GPA 2166–17. Although there have been few changes from the 2005 standard, the BLM believes the revised version would result in gas samples that better represent the gas flowing through the FMP, which would help improve the accuracy of the heating value reported on the OGOR B. There are no substantive changes to this standard; we are proposing to add approval for the reaffirmation date of this standard.

• GPA Standard Midstream 2261–19, Analysis for Natural Gas and Similar Gaseous Mixtures by Gas Chromatography; Revised 2019 (''GPA 2261–19''). This standard establishes a method to determine the chemical composition of natural gas and similar gaseous mixtures within set ranges using a gas chromatograph (CG). There are no substantive changes to this standard; we are proposing to add approval for the new revision date of this standard.

• GPA Midstream Standard 2198–16, Selection, Preparation, Validation, Care and Storage of Natural Gas and Natural Gas Liquids Reference Standard Blends; Revised 2016 (''GPA 2198–16''). This standard establishes procedures for selecting the proper natural gas and natural gas liquids reference standards, preparing the reference standards for use, verifying the accuracy of composition as reported by the manufacturer, and the proper care and storage of those reference standards to ensure their integrity as long as they are in use. This standard is being proposed for incorporation because, since the existing regulation published in November 2016, the GPA published a revised standard, GPA 2198–16. The BLM reviewed the revised standard and determined that the changes from the previous version will help improve the accuracy, reliability, and verifiability of reference standard blends.

• PRCI Contract–NX–19, Manual for the Determination of Supercompressibility Factors for Natural Gas; December 1962 (''PRCI NX 19''). This manual presents detailed information for computations of compressibility factors and densities of natural gas and other hydrocarbon gases. This standard was previously approved for IBR and is unchanged.

The BLM is proposing to remove four industry standards that are currently incorporated by reference in existing subpart 3175.

• API MPMS Chapter 22.2—Testing Protocol, Differential Flow Measurement Devices; First Edition, August 2005; Reaffirmed August 2012 (''API 22.2''). This standard is a testing protocol for any flow meter operating on the principle of a local change in flow velocity, caused by the meter geometry, giving a corresponding change of pressure between two reference locations. API 22.2 is being proposed for removal because the regulatory language in existing § 3175.47 on the testing process, which refers to API 22.2, would be replaced with a general reference to the PMT website for all equipment that requires BLM approval in proposed § 3175.40. See the discussion of the PMT review process under § 3175.40 later in this preamble.

• GPA Standard 2166–05, Obtaining Natural Gas Samples for Analysis by Gas Chromatography; Adopted as a tentative standard, 1966; Revised and Adopted as a standard 1968; Revised 1986, 2005 (GPA 2166–05). This standard recommends procedures for obtaining samples from flowing natural gas streams that represent the compositions of the vapor phase portion of the system being analyzed. GPA 2166–05 is being proposed for removal because this standard has been replace by GPA 2166–17.

• GPA Standard 2198–03, Selection, Preparation, Validation, Care and Storage of Natural Gas and Natural Gas Liquids Reference Standard Blends; Adopted 1998; Revised 2003 (GPA 2198–03). This standard establishes procedures for selecting the proper natural gas and natural gas liquids reference standards, preparing the reference standards for use, verifying the accuracy of composition as reported by the manufacturer, and the proper care and storage of those reference standards to ensure their integrity as long as they are in use. GPA 2198–03 is being proposed for removal because this standard has been replaced by GPA 2198–16.

• GPA Standard 2286–14, ''Method for the Extended Analysis of Natural Gas and Similar Gaseous Mixtures by Temperature Program Gas Chromatography; Adopted as a standard 1995; Revised 2014 (''GPA 2286–14''). This method is intended for the compositional analysis of natural gas and similar gaseous mixtures where precise physical property data of the hexanes and heavier fractions are required. The procedure is applicable for mixtures which may contain components of nitrogen, carbon dioxide, and/or hydrocarbon compounds C1–C14. GPA 2286–14 is being proposed for removal because, since the existing regulations was published in November 2016, the BLM determined that this standard is primarily intended for laboratory use and is not applicable to the determination of gas composition in typical field applications.

3175.31 Specific Performance Requirements

Existing § 3175.31 establishes the minimum performance standards for uncertainty, bias, and verifiability. The BLM is proposing certain modifications to this section in order to clarify its requirements and facilitate the application of those requirements. Clarification of these requirements is of particular importance because this section established the minimum standards that all equipment and processes must meet for BLM approval.

Existing § 3175.31 (a) establishes flow-rate uncertainty limits for high- and very-high-volume FMPs. There are no uncertainty limits for low- and very-low-volume FMPs in the existing regulation and the BLM is not proposing to add any. The proposed rule would add a new paragraph (a)(3) to clarify that there are no uncertainty limits for low- and very-low-volume FMPs.

Proposed § 3175.31(b)(1) would increase the allowable uncertainty in average annual heating value for high-volume FMPs from 2 percent to 3 percent. For very-high-volume FMPs, the average annual heating value uncertainty would be increased from 1 percent in existing § 3175.31(b)(2) to 2 percent. The average annual heating value uncertainty is a measure of how well a 12-month average of heating values, as determined from spot samples, compares to a hypothetical 12-month average based on continuous heating value measurement. The average annual heating value uncertainty is a function of how variable the heating value from spot sample to spot sample is and how often the spot samples are taken. For an FMP that has heating values that are fairly consistent from sample to sample, it may only take two or three samples to achieve a set level of uncertainty. On the other hand, if the heating values vary considerably from sample to sample, it may take 10 or more samples to achieve the same level of uncertainty.

The BLM developed the following equation (see existing § 3175.31(b)(4)) which defines the relationship between the number of samples taken over a year (N), the average annual heating value uncertainty

$$(U_{\overline{HV}}),$$

and heating value variability from sample to sample ($V_{95\%}$).

$$N = 0.904\left(\frac{V_{95\%}}{U_{\overline{HV}}}\right)^2$$

In this equation, the number of samples required to achieve a set level of average annual heating value uncertainty changes as the square of the average annual heating value uncertainty. For example, if the heating value variability is ±4 percent and the required level of uncertainty is ±1 percent, then it would require the operator to take 15 samples per year. However, if the required level of uncertainty was increased to ±2 percent, it would reduce the required number of samples per year to four.

Since the existing rule published in November 2016, industry has expressed concern over § 3175.115(b), which requires the operator to adjust the sampling frequency of high- or very-high-volume FMPs to achieve the levels of average annual heating value uncertainty required under § 3175.31(b). By increasing the maximum level of uncertainty under the proposed rule, the maximum number of samples required per year would drop by 75 percent for very-high-volume FMPs and 56 percent for high-volume FMPs. The BLM believes that the proposed increase in average annual heating value uncertainty would alleviate much of industry's concern while still providing the BLM with an objective and performance-based method to establish spot sampling frequency. The BLM also believes the proposed uncertainty limits for average annual heating value are justified because they would match the uncertainty limits for volume determination. The BLM is specifically seeking comments on this proposed change. Both volume and heating value have equal effect on the amount of royalty due. Royalty is determined by a multiplication of the royalty rate (determined by the lease agreement), the volume (determined by a BLM compliant measurement point), the heating value (determined by a BLM approved sampling method), and the value (determined by ONRR).

In the existing regulation, the defined limits for heating value uncertainty came from the BLM Threshold Analysis. In the time period between the publication of the current regulation, it has become clear that some costs were not considered in that calculation. The possibility of increased sampling frequency would incur additional administrative costs and visits to FMP locations for operators. Many times these locations are remote, which also creates additional associated cost with the sampling. The BLM has accounted for those additional costs in the proposed heating value uncertainty limits.

Existing § 3175.31(b) establishes heating value uncertainty limits for high- and very-high-volume FMPs. There are no uncertainty limits for low- and very-low-volume FMPs in the existing regulations and the BLM is not proposing to add any. The BLM would add a new paragraph (b)(3) to the proposed rule only to clarify that there are no uncertainty limits for low- and very-low-volume FMPs.

3175.40 Measurement Equipment Requiring BLM Approval

The proposed rule would reorganize existing § 3175.40, as well as make a number of changes to the requirements. Existing § 3175.40 lists the types of equipment that are allowed for use at FMPs. Some of this equipment, including flange-tapped orifice plates (existing § 3175.41), chart recorders (existing § 3175.42, for low- and very-low-volume FMPs only), and gas chromatographs (existing § 3175.45) are automatically approved with no additional review required. Other equipment—including transducers (existing § 3175.43), flow-computer software (existing § 3175.44), flow conditioners (existing § 3175.46),

differential meters other than flange-tapped orifice plates (existing § 3175.47), linear meters (existing § 3175.48), and accounting systems (existing § 3175.49)—requires BLM approval based on a review and recommendation from the PMT. The sections for each device requiring BLM approval include some description of the required testing.

Under the proposed rule, the equipment requiring BLM approval would be grouped under revised § 3175.40 and the equipment automatically approved would be grouped under revised § 3175.41 (see discussion under § 3175.41). All discussion regarding the testing and PMT review process under existing § 3175.43 through § 3175.49 would be removed and replaced with a statement directing the reader to the PMT section of the *www.blm.gov* website. The BLM is proposing these changes in order to streamline and better organize the regulations.

As with the transducer and flow computer testing procedures (§§ 3175.130 and 3175.140, respectively), all discussion relating to the testing and review process would also be removed and placed on the PMT website. The reason for this change is to achieve consistency with subpart 3174 (oil measurement) and to allow modifications to the testing and review processes based on experience and input from operators and manufacturers. As explained in the previous discussion of proposed § 3170.30, the purpose of the PMT review process, and any associated testing procedures, will be to assess whether the proposed alternative equipment meets the minimum performance standards of subpart 3175.

Existing § 3175.48 addresses all types of linear gas meters. Under proposed § 3175.40, linear meters would be listed as Coriolis meters (§ 3175.40(e)) and ultrasonic meters (§ 3175.40(f)). The BLM is proposing this change because the BLM estimates that the majority of linear meters used for gas measurement will fall into one of these two categories. All other types of linear meters would be reviewed as ''new technology'' by the PMT. The PMT will need to develop a testing procedure for all equipment covered under § 3175.40. It would be difficult for the PMT to build a generic testing procedure for all linear meters due to the dramatic differences in technology and varied range of influence effects that such a widely diverse group of equipment would create.

The proposed rule would add new § 3175.40(g), which would address software used to capture and process output from a gas chromatograph (GC), to the list of devices that require BLM approval. The BLM is proposing to require BLM approval of this software because it is critical to the determination of heating value and relative density, both of which have a direct effect on the determination of royalty. In addition, the BLM is not aware of any industry standards that dictate how this software must function or any existing independent, third party, review of this software. Like other equipment and software requirements, the BLM would review GC software to ensure that it complies with the § 3175.31 requirements, particularly with respect to verifiability and any potential bias that a software might produce.

The raw output from a GC consists of a chromatogram, which is a graph of detector response over time. As a gas sample is run through a GC, the GC first sorts the molecules in the gas, typically by molecular weight, using a series of filters and devices known as columns. After flowing through these filters and columns, all the methane molecules, for example, are grouped together and segregated from the other molecules. Likewise, the ethane, propane, butane, and other molecules are each grouped and segregated. As the groups of segregated molecules flow out of the GC, they pass through a detector that generates a response, or ''blip,'' in relation to the size of the group of molecules. A large blip corresponds to a large concentration of that molecule in the gas sample. A software package captures this output from the GC and uses the size of the blip as well as the type of molecule to determine the concentration of each molecule in the gas sample. The BLM believes that PMT review of this software is critical to ensure the software is properly interpreting the output from the GC and accurately determining the molecular concentrations, which are ultimately used to calculate the heating value and relative density of the gas sample.

The proposed rule would add water-vapor measurement equipment and methods to the list of devices that require BLM approval. The most common water-vapor measurement devices—chilled mirrors and laser detection devices—are automatically approved under the existing regulation (see § 3175.126(a)(1)(i) and (ii)). Water vapor in a gas stream does not contribute any heating value and displaces hydrocarbon molecules, which do have heating value. As a result, water vapor reduces the heating value of gas, which in turn reduces the royalty value of the gas.

Both the existing and proposed rules allow operators to reduce the gas heating value based on measured amounts of water vapor in the gas stream. Unlike other molecules, such as carbon dioxide and nitrogen, which also reduce the heating value of a gas, water vapor is not detected using a gas chromatograph; therefore, alternate means of measuring water vapor are commonly used, such as a chilled mirror and laser detection devices.

Since the publication of the existing rule, the BLM has determined that both chilled mirrors and laser detection devices can vary in design and may have certain operating limitations that could affect the amount of water vapor they measure. For example, some laser detectors will mistake other components in the gas stream for water vapor, thereby overstating the amount of water vapor that is actually in the gas stream. Chilled mirrors also vary in design and can sometimes mistake hydrocarbons for water, which can cause errors in the measured water vapor content. By requiring PMT review and BLM approval of all water-vapor detection equipment and methods used at FMPs, the BLM can determine the accuracy of these devices and their operating limitations based on independent laboratory data. Like other equipment, the BLM would review these devices to ensure compliance with the § 3175.31 requirements, particularly with respect to any potential bias that a device might produce by falsely detecting hydrocarbons as water vapor.

The proposed rule would add § 3175.40(i), which would address measurement data systems. Under existing § 3175.49, accounting systems used to report measurement data must be approved by the BLM. Since the publication of the existing regulation, the BLM has found that the term ''accounting system'' has caused confusion among operators, who sometimes assume this includes systems that maintain financial information. The proposed rule would not only move the requirement for accounting systems to obtain BLM approval to a new section, it would also rename accounting systems to ''measurement data systems'' in order to more accurately describe these systems. Measurement data systems are designed to gather, edit, store, and report measurement data and have nothing to do with financial information. The review process would allow the BLM to confirm that the measurement data systems will adequately preserve raw data and verifiability to meet the requirements of § 3175.31.

3175.41 Approved Measurement Equipment

The proposed rule would modify § 3175.41, to place all approved measurement equipment in a single section of the regulation. This consolidation would replace the existing § 3175.40, § 3175.41, § 3175.42, § 3175.43, § 3175.44, and § 3175.45.

3175.43 Data Submission and Notification Requirements

Under proposed § 3175.43, all the notification and data submission requirements would be consolidated and listed in one place. The BLM proposes to add this section to help operators identify and track the notification and data submission requirements. This section does not impose any new notification or reporting requirements.

3175.50 Grandfathering

The BLM is proposing an expansion of the equipment that would be grandfathered in place and not require BLM approval. The BLM is proposing to revise subpart 3175's grandfathering provision, which appears in existing § 3175.61, and relocate it to § 3175.50. Under the existing regulations (§§ 3175.43, 3175.44, and 3175.46 through 3175.49), the operator can only use equipment that has been approved by the BLM, through the PMT, and then placed on the list of type-tested equipment. The implementation of this provision was delayed until January 17, 2019, under existing § 3175.60(a)(4) for equipment installed on or before January 17, 2017, and under § 3175.60(b)(2)(i) for equipment installed after January 17, 2017. The implementation of § 3175.40 was further delayed by practical necessity (see BLM Instruction Memorandum 2018–077). The proposed new grandfathering section (§ 3175.50(a)) would exempt all equipment covered by § 3175.40 in place at very-low, low, and high-volume FMPs on or before the effective date of the final revised rule from the BLM-approval requirement. Equipment at very-high-volume FMPs would not be exempt, regardless of when it was installed. The BLM is not proposing to grandfather equipment installed at very-high-volume FMPs because of the higher risk of significant mismeasurement due to the high volume of gas measured and because the revenue resulting from the high production volumes would make replacing equipment, if necessary, economically feasible.

There are three reasons that the BLM is proposing to add this grandfathering provision. First, shortly after its inception, the PMT realized that the workload of reviewing data from all existing makes, models, and sizes of equipment requiring approval under § 3175.40 would be enormous and could take years to complete, far longer than the originally projected 30- to 60-day review process. Second, operators have expressed concerns about the cost of replacing existing equipment that is not on the BLM list of approved equipment with equipment that is on the list, especially at lower-volume FMPs. Third, upon review of operator-supplied field data for some existing equipment approvals, it became clear to the PMT that such data was, in most cases, insufficient to perform statistically significant analysis. Without a controlled baseline, most data received provided little useful information about the performance of the device. The BLM understands that it is impractical for operators to remove outdated or obsolete equipment from the field and subject it to laboratory testing. The grandfathering provision of this proposed rule would balance the possible threat of uncertainty error against the imposed burden of such testing.

Based on these concerns, the BLM is proposing to grandfather all equipment installed at very-low, low-, and high-volume FMPs on or before the effective date of the new final rule. This would dramatically decrease the number of makes, models, and sizes of equipment that would be subject to review by the PMT and would assure operators that they would not have to immediately replace this equipment.

The proposed grandfathering could have some impacts on the BLM's ability to ensure accurate measurement, the absence of statistically significant bias, and verifiability, all of which are required under the performance goals in both the existing regulations and the proposed regulations. For example, for high-volume FMPs, which must comply with the uncertainty performance goals under § 3175.31(a) of the existing regulations, the grandfathering of existing transducers, flow conditioners, linear meters, and differential meters other than flange-tapped orifice plates could impact the BLM's ability to ensure accurate measurement. The current version of the BLM's uncertainty calculator, which is used to determine and enforce overall uncertainty, is based on the manufacturer's specifications for that device. It has been the BLM's experience that manufacturers develop specifications based on proprietary test procedures and test data interpretation methods that may overstate the actual field performance of their devices. By grandfathering these devices, the actual overall measurement uncertainty has the potential to be substantially greater than what is calculated using the uncertainty calculator. In contrast, those devices, which are not grandfathered, are subject to independent review and analysis by the PMT based on laboratory test data. The uncertainty and operating limitations of these devices determined by the PMT would be used in the uncertainty calculator, yielding a more realistic uncertainty calculation.

For all devices covered by existing regulations (§§ 3175.43, 3175.44, and 3175.46 through 3175.49), the lack of PMT review of laboratory data could result in devices operating outside the limits over which they were tested. This could result in these devices operating at conditions that would lead to statistically significant bias.

Notwithstanding the potential drawbacks of the proposed grandfathering, the majority of the meters affected by this proposal do not have an uncertainty requirement as part of their specific performance requirements, and compliance with the existing regulation could result in cost that would exceed a low producing or older well's income after that expense. The BLM believes the benefits of continued production outweigh the potential drawbacks and pose little risk to royalty accountability.

Proposed § 3175.50(b)(1) would clarify § 3175.61(a) of the existing regulation. Both the existing and proposed regulations grandfather certain aspects of meter tubes installed at low- and high-volume FMPs before January 17, 2017. During implementation of the existing regulations, numerous operators expressed confusion over the conditions for grandfathering, such as whether the grandfathering would still apply if they replaced the meter tube at an FMP that was in place before January 17, 2017. The wording of existing § 3175.61(a) applies the grandfathering to ''meter tubes installed at low- and high-volume FMPs before January 17, 2017. . . .'' The BLM has interpreted this to mean that the January 17, 2017, ''cut-off date'' applies to the date of the meter tube installation, not the date that the FMP was established. If the BLM had intended the latter interpretation, the wording would have been ''meter tubes at FMPs in place before January 17, 2017. . . .'' In any case, this proposed rule would clarify this requirement by adding an explicit statement that if a meter tube is replaced it no longer qualifies for grandfathering.

The current industry standards for meter tubes that would be grandfathered

under this proposed section have been in place since 1991 and are based on large amounts of laboratory testing and data analysis. The BLM believes that requiring meter tubes to comply with these standards is important for accurate and verifiable measurement. The only reason for grandfathering non-compliant meter tubes installed before January 17, 2017, was to eliminate the cost of having to replace them with meter tubes that comply with the current industry standards, recognizing that there could be some adverse impact to measurement as a result. If an operator is going to change out a meter tube anyway (due to damage or excessive wear, for example) the BLM does not believe the additional expense of replacing the existing non-compliant meter tube with one that complies with current industry standards is significant, especially considering that current industry meter-tube standards have been in effect for 26 years. When a meter tube must be replaced, the only justification for grandfathering—expense—is largely eliminated.

Proposed § 3175.50(b)(2) would expand on current § 3175.61(a) in order to make clear that the BLM will accept measured inside pipe diameters that comply with AGA Report No. 3 (1985), Section 4.3.3 (incorporated by reference, see § 3175.30) for grandfathered meter tubes covered in this subpart. The BLM recognizes that much of the grandfathered equipment will not have reference inside diameters that meet the requirements of § 3175.91(d)(7), § 3175.92(d)(2), § 3175.93(d), § 3175.101(c)(5), § 3175.102(e)(1)(iii), and therefore the BLM will allow the use of measured inside diameters that comply with AGA Report No. 3 (1985), Section 4.3.3 for flow-rate calculations.

Proposed § 3175.50(c)(2)(i) would fix two typographical errors in existing § 3175.61(b)(2). This section refers to a variable called ''xi'' in ''API 14.3.3 (1992).'' The correct variable name is ''x1'' and the reference should be API 14.3.3 (2013). Proposed § 3175.50(c)(2)(ii) keeps the current language in existing § 3175.61(b)(2), but segments the compressibility for clarity.

3175.60 Timeframes for Compliance

The proposed rule would generally require all measuring procedures and equipment to comply with the proposed requirements by the effective date of the final rule. The BLM is not proposing phase-in periods, except in the special circumstances described in paragraphs (a) through (d) of this section. Under existing regulations, measuring procedures and equipment used at high- and very-high-volume FMPs had to comply with the requirements by January 17, 2018. Measuring procedures and equipment used at low-volume FMPs had to comply with the requirements by January 17, 2019, and, for very-low-volume FMPs, compliance is required after January 17, 2020. Because all FMPs, other than very-low-volume FMPs, would already have to comply with the existing regulations by the time the final rule is published, and because most of the changes proposed under this rule would be less restrictive than those in the existing rule, the BLM did not see the need for phase-in periods, other than for the items specified in paragraphs (a) through (d) of this section.

Section 3175.60(a) would require measuring equipment and procedures installed at very-low-volume FMPs before January 17, 2017, to comply with all of the requirements of this subpart as of the effective date of the final rule.

Section 3175.60(b) would change the phase-in period for the requirement to enter gas analyses into the BLM's Gas Analysis Reporting and Verification System (GARVS) (see § 3175.120(e) and (f) of existing regulations). Under existing §§ 3175.60(a)(2) and 3175.60(b)(2)(ii), the requirement to enter gas analyses into GARVS was delayed until January 17, 2019. (Note that this requirement was effectively delayed further through Washington Office Instruction Memorandum 2018–077.) In the proposed rule, the requirement to enter gas analyses into GARVS would go into effect 90 days after the BLM provides notice that GARVS is available for use. The BLM is proposing this change because the development and testing of GARVS may take much longer than expected given the complexity of GARVS. The BLM is not proposing a specific date for this requirement to become effective due to the difficulty in estimating time frames for development of GARVS.

Section 3175.60(c) would change the phase-in period for the requirement to use only the BLM-approved equipment as specified in §§ 3175.43 and 3175.44, and §§ 3175.46 through 3175.49 of the existing regulations. Under existing regulations (see §§ 3175.60(a)(4) and 3175.60(b)(2)(iii)), the requirement for operators to use only specified equipment that has been approved by the BLM becomes effective on January 17, 2019. Under the proposed rule, this deadline would be extended to 2 years after the effective date of the final rule. The BLM has established the PMT, which is responsible for reviewing equipment and making recommendations to the BLM as to whether the equipment should be placed on the list of approved equipment. The PMT has developed the testing procedures required for PMT review and has begun to review equipment. The BLM is proposing the 2-year extension of the deadline based on the PMT's current work and estimates of the time it will take the PMT to complete an initial review of equipment likely to be submitted by operators and manufacturers.

Section 3175.60(d) would add a phase-in period for the requirement for electronic gas measurement systems to display the software version (see existing § 3175.101(b)(4)). The reason the existing regulation requires the software version to be displayed is to allow BLM inspectors to check that the software version is on the BLM list of approved equipment. However, as described previously, the requirement to use only BLM-approved equipment (including software) would not come into effect until 2 years after the effective date of the new final rule. Therefore, there is no point in requiring EGM systems to display the software version until operators are required to use only BLM-approved software versions.

The BLM is proposing to delete existing § 3175.60(c) and (d). Paragraph (c) requires operators to comply with Onshore Order No. 5 and the statewide NTLs during the phase-in periods and paragraph (d) rescinds Onshore Order No. 5 and the statewide NTLs once the phase-in periods end. If this rule is finalized as proposed, these paragraphs will not be needed. For all FMPs, the phase-in periods have ended and Onshore Order No. 5 and the statewide NTLs have been rescinded under paragraph (d).

3175.80 Flange-Tapped Orifice Plate (Primary Device)

Existing and proposed § 3175.80 define the requirements for orifice metering of gas. The proposed rule seeks to improve § 3175.80 based on feedback from BLM field offices. The introductory language in this section would be changed to reference the proposed § 3175.50 grandfathering requirements.

With proposed § 3175.80(a), the BLM would replace existing paragraph (a) (which will become § 3175.80(c) of the proposed rule) with new language that would clarify a requirement in existing Table 1 to § 3175.80. The first entry (''Fluid conditions'') in Table 1 to § 3175.80, refers to API 14.3.1, Subsection 4.1, which describes the conditions of the fluid flowing the through the meter on which the

standard is based. These conditions include:

- Single phase;
- Homogeneous;
- Newtonian; and
- With a Reynolds number of 4,000 or greater.

Because this reference in API 14.3.1 is a description of assumed fluid conditions used to develop the standard, rather than a requirement, it is unenforceable as written. Therefore, proposed § 3175.80(a)) would still refer to API 14.3.1, Subsection 4.1, but would also clarify that fluid conditions must comply with the description in API. The BLM received no comments on this issue during the promulgation of the existing regulation, but discovered the possible confusion in internal BLM discussions with field inspectors.

With proposed § 3175.80(b), the BLM would replace existing paragraph (b) (which would become § 3175.80(d) of the proposed rule) with new language that would clarify a requirement in existing Table 1 to § 3175.80. This modification would allow for greater clarity on the reference API 14.3.2, Subsection 6.2.1, and the perpendicularity requirements of the orifice plate.

Under existing § 3175.80(c), operators are required to inspect orifice plates every 2 weeks at FMPs measuring their first production or from wells that have been re-fractured. This proposed rule would remove the phrase ''if the inspection shows that'' from the existing requirement to replace the orifice plate if it does not comply with API 14.3.2, Section 4. It is the BLM's understanding that this phrase was interpreted by some operators to mean that BLM personnel attendance is necessary at each inspection. The BLM did not intend for the operator to wait on BLM personnel to perform these inspections. Under this proposed rule, the operator or their representative would inspect the orifice plate and determine if the orifice plate met the requirements.

Proposed § 3175.80(f) would modify the specific guidelines for maximum time between inspections in existing § 3175.80(d). Under this proposed rule, the BLM would move Table 1 to § 3175.115 to Appendix B of this subpart, and add a reference to Appendix B in proposed § 3175.80(f)(2). This removes the ambiguity with respect to the acceptable timeframes for compliance for this subpart. See discussion under Appendix B.

Proposed § 3175.80(j) would add an initial basic meter-tube inspection that would require operators to perform a basic meter-tube inspection within 1 year after installation of a very-high-volume FMP and within 2 years after installation of a high-volume FMP. This requirement would only apply to FMPs installed after the effective date of the new final rule. The BLM is proposing this requirement in order to help offset potential meter-tube measurement issues caused by well start-up that could go undetected due to the longer time between routine basic meter-tube inspections proposed under § 3175.80(k). If a meter is subject to pitting, buildup of foreign substances, or obstructions, these issues will typically show up early in the life of the meter. During the basic meter-tube inspections that the BLM has witnessed up to the development of this proposed rule, BLM inspectors have discovered a high probability of loose material collecting in the flow line, partially blocking flow conditioners and orifice plates. The initial meter-tube inspection would allow operators to catch and resolve these problems before reverting to the routine basic meter-tube inspection frequencies proposed in § 3175.80(k).

Proposed § 3175.80(k) would change the basic meter-tube inspection frequencies from those required under existing § 3175.80(h). Currently, operators must perform a basic meter-tube inspection every year at very-high-volume FMPs, every 2 years at high-volume FMPs, and every 5 years at low-volume FMPs. Very-low-volume FMPs are exempt from basic meter-tube inspections. Industry has expressed concern about the cost associated with performing a basic meter-tube inspection at this frequency and the lost production that occurs when shutting down a meter to inspect the meter tube. Based on these concerns, the BLM re-examined the required inspection frequency and determined that in most cases, the BLM could achieve roughly the same confidence of meter-tube condition with fewer inspections. Under the proposed rule, operators would have to perform a basic meter-tube inspection every 5 years at both high- and very-high-volume FMPs, and every 10 years at low-volume FMPs. Very-low-volume FMPs would continue to be exempt. The BLM would also add a requirement for an initial basic meter-tube inspection for high- and very-high-volume FMPs (see discussion under proposed § 3175.80(j)) and would change the name of the basic meter-tube inspection to ''routine'' basic meter-tube inspection.

Based on industry experience, meter-tube problems, such as pitting and buildup of foreign substances, are more likely to happen at lower-volume meters. High-volume meters tend to have high enough gas velocity through the meter that corrosive substances, which can cause pitting, such as standing water, cannot collect in the meter tube. Foreign substances, such as sludge and scale, also are less likely to accumulate where gas velocity is high. Although low-volume FMPs are more likely to have pitting and sludge buildup, the lower volume makes any potential mis-measurement less significant. The BLM believes the proposed routine basic meter-tube inspection frequency strikes a balance between economic burden on the operator and mitigating the risk of lost royalty.

The BLM is proposing a number of changes in § 3175.80(k)(3) based on industry concerns. Under existing § 3175.80(i)(1)(i), the operator must clean the meter tube on a low-volume FMP if the basic meter-tube inspection shows pitting, obstructions, or a buildup of foreign substances. For high- and very-high-volume FMPs, the operator must perform a detailed meter-tube inspection under existing § 3175.80(i)(1)(ii) and make any necessary measurements to determine if the meter complies with API 14.3.2, Subsections 5.1 through 5.4 and API 14.3.2, Subsection 6.2, or the requirements under existing § 3175.61(a), if the meter tube is grandfathered under existing § 3175.61(a). This typically involves removing the meter tube and measuring the inside diameter at multiple points with a micrometer. It also involves determining the surface roughness of the inside surface of the meter tube. A detailed meter-tube inspection can be costly.

Industry has expressed two concerns specific to these requirements during outreach conducted after the release of the 2016 rule. First, industry pointed out that if an operator performs a basic meter-tube inspection on a low-volume FMP and the only identified problem is pitting, the operator is required to clean the meter tube under existing § 3175.80(i)(1)(i). However, cleaning the meter tube will not resolve pitting issues and therefore provides no value. Second, if an operator performs a basic meter-tube inspection on a high- or very-high-volume FMP and the only identified problem is an obstruction, such as debris in front of the orifice plate or flow conditioner, the problem can be easily resolved by removing the debris. As long as there were no other issues identified during the basic meter-tube inspection, performing a detailed inspection under existing § 3175.80(i)(1)(ii) would provide no value and the removal of the obstruction would return the meter to normal

service, which is the overall goal of the meter inspection.

The BLM agrees with these concerns and is proposing to make a number of changes to the basic meter-tube inspection requirements to address them. Under proposed § 3175.80(k)(3), paragraphs (i) through (iii) would be added to identify a required course of action based on the results of the basic meter-tube inspection. If the only issue identified on a high- or very-high-volume FMP is an obstruction, proposed paragraph (i) would only require the operator to remove the obstruction; a detailed inspection would no longer be required. Proposed paragraph (ii) would only require the operator to clean the meter tube at low-volume FMPs if the basic meter-tube inspection identified a buildup of foreign substances. If the basic meter-tube inspection at a high- or very-high-volume FMP revealed pitting or a buildup of foreign substances, then the operator would have to perform a detailed meter-tube inspection. Proposed paragraph (iii) would require a detailed meter-tube inspection if the basic meter-tube inspection revealed pitting or the build-up of foreign substances at a high- or very-high-volume FMP. Proposed paragraph (iii) is essentially the same as the current requirement in existing § 3175.80(i). New paragraph (iv) of proposed § 3175.80(k)(3) would allow the operator to submit an extension request to perform a detailed meter-tube inspection, which is essentially the same as existing § 3175.80(i)(1)(iii).

Proposed § 3175.80(k)(7) would modify the language of the existing regulation to set new timelines for initial and routine basic inspections. This would reduce the frequency of routine basic inspections and add a category for initial inspections.

Under proposed § 3175.80(l)(2), the BLM would modify the requirement in existing § 3175.80(i)(2) regarding documentation of detailed meter-tube inspections at FMPs installed after January 17, 2017. The existing regulation requires the documentation to show that the meter tube complies with API 14.3.2, Subsections 5.1 through 5.4; however, it does not reference API 14.3.2, Subsection 6.2 which is referenced under existing § 3175.80(i)(1)(ii). This omission was an oversight in the writing of the current regulation and the BLM is therefore proposing to add the reference to the corresponding section of the proposed rule.

Under proposed § 3175.80(p), the BLM would move the requirements for the sampling-probe location in the meter tube. All three of these requirements are listed in existing § 3175.112(b). These requirements include locating the sample probe:

- At the first obstruction downstream of the primary device;
- At least five pipe diameters downstream of the primary device; and
- Vertically in a horizontal section of pipe (through a reference to API MPMS 14.1, Subsection 6.4.2).

The BLM proposes to move these requirements from existing § 3175.112(b) to proposed § 3175.80(p) in order to consolidate all meter-tube construction requirements under one section. The sample probe is generally considered to be part of the meter tube because having the sample probe too close to the orifice plate could reduce the accuracy of the meter. In addition, the BLM inspects the sample probe location as part of an inspection of the meter tube. In proposed § 3175.112(b)(1), the BLM would remove the restatement of the sample probe requirements and replace it with a cross reference to § 3175.80(p).

The proposed section would also address exceptions for vertical meter tubes, which are not addressed in the existing regulations. Under the existing regulations, the requirement to mount the sample probe vertically in a horizontal section of pipe would effectively prohibit vertical meter tubes. For vertical meter tubes, the only way to comply with this requirement would be to install the sample probe after an elbow downstream of the primary device. However, the elbow would then become the first obstruction and the installation would no longer comply with the requirement that the sample probe must be the first obstruction downstream of the primary device.

During the implementation of the existing regulation, the BLM has heard concerns from numerous operators that have vertical meter tubes. Vertical meter tubes are not prohibited under industry standards such as API MPMS 14.3.2 and, in some situations, can have advantages over horizontal meter tubes. The BLM believes that the failure to address vertical meter tubes in the existing regulations was an oversight that this proposed rule would fix.

3175.91 Installation and Operation of Mechanical Recorders

Existing and proposed § 3175.91 defines the installation and operation requirements for mechanical recorders. The proposed rule would clarify parts of the requirements for the connection of mechanical recording devices as well as the on-site information requirements.

Proposed § 3175.91(a)(1) would revise the language in the existing regulation in order to separate the guidelines for gauge lines and manifold valves. The change would dedicate § 3175.91(a)(1) to gauge lines and create a new section for valves and manifolds, § 3175.91(a)(2).

Proposed § 3175.91(a)(2) would revise the language in the existing regulation to specify that valves, including those in manifolds, would have to have full opening internal diameters of not less than ⅜ inch. The existing rule requires gauge lines, ports, and valves to have a nominal diameter of not less than ⅜ inch. This rule would clarify this language because the term ''nominal'' is not typically associated with ports and valves. Instead, ports and valves are typically defined by their full-opening bore size. The term ''nominal,'' as used with tubing, means that the outside diameter is approximately ⅜ inch, but the inside diameter can vary based on the wall thickness. Most ⅜-inch nominal tubing used for gauge lines has an inside diameter of 0.305 inches. The BLM changed the wording for gauge lines from ⅜-inch inside diameter in the October 2015 proposed rule to ⅜-inch nominal diameter in the final rule due to comments that stated operators have historically used ⅜-inch nominal tubing for the gauge lines and that requiring the tubing to have an internal diameter of ⅜ inch would require replacement of virtually all gauge lines, which would be cost prohibitive. The requirement for ⅜-inch gauge lines, ports, and valves originated from API 14.3.2, Subsection 5.4.3, which recommends that flange taps have a minimum ⅜ inch internal diameter and that gauge lines not include sudden changes in inside diameter. By separating the requirements for gauge lines and valves and manifolds the BLM can use the term ''nominal'' for gauge lines, to address operator concerns, without creating a potential issue or confusion about the requirements as they relate to bore sizing for valves and manifolds.

Proposed § 3175.91(d)(6) would change the wording from ''Meter elevation'' to ''Elevation of or atmospheric pressure at the FMP'' for on-site data required for mechanical recorders. This would allow either the FMP elevation or the atmospheric pressure at the FMP to be indicated on site. This rule proposes to allow atmospheric pressure to be posted at the FMP instead of meter elevation because either value will allow the BLM to verify the flow computer is properly programmed. Atmospheric pressure tends to be more readily available to operators and the BLM will be able to verify the atmospheric pressure during

an inspection. The atmospheric pressure can influence the flow rate calculation in two ways. If the recorder is using a gauge-pressure chart, then the operator must add the value of the atmospheric pressure to the pressure reading from the chart to calculate flow rate. If the recorder is using an absolute pressure chart, then the operator must know the value of atmospheric pressure when the pen offset is verified or calibrated. In either case, if the wrong value of atmospheric pressure is used, the flow-rate calculation will be in error. The lower the gas pressure at the FMP, the more significant the error becomes. If the atmospheric pressure is posted on site, then the BLM can verify that pressure—at least to some degree—by using GPS elevation or the elevation listed on the APD, and cross-reference that elevation to the table in Appendix A of the rule.

Proposed § 3175.91(d)(7) would require the reference inside diameter of the meter tube to be maintained at the FMP. As discussed in the discussion of § 3175.10 earlier, the reference inside diameter is required for proper flow rate calculation. Under § 3175.91(d)(7) of the existing regulations, only the inside diameter of the meter tube is required to be on site, but it is not clear which specific inside diameter is required. As the intent of the on-site information is to verify accurate gas measurement, the reference inside diameter of the meter tube would be required on site to verify its use in flow rate calculations.

3175.92 Verification and Calibration of Mechanical Recorders

Existing and proposed § 3175.92 define the verification and calibration requirements for mechanical recorders.

Proposed § 3175.92(b)(1) would add language to specify the equipment covered by this requirement and clarify that the timeframes referred to in Table 1 are in months. Proposed § 3175.92(b)(2) would clarify the timeframe requirements of Table 1 of this subpart, and add a reference to Appendix B in § 3175.92(b)(2). See the discussion of Appendix B, later.

Proposed § 3175.92(b)(3) would delay routine verification for an FMP in non-flowing status. This section would require the verification to be conducted within 15 days after the flow is re-initiated. Under this section, non-flowing status means at least 3 months of non-flow, and does not include intermittently flowing on a weekly or daily basis. The existing regulations do not address FMPs in non-flowing status and requires operators to continue to perform routine verifications on them even if they have been shut in since the last verification. The BLM is proposing this change based on industry concern and that there is no public benefit to requiring routine verifications when an FMP is shut in for a long period of time.

Proposed § 3175.92(d)(2) would require the operator to document the reference inside diameter of the meter tube. As discussed previously, the reference inside diameter is required for proper flow-rate calculation. The existing regulations require the inside diameter of the meter tube to be documented on site, but it is not clear which specific inside diameter is required. As the purpose of requiring the information is to verify accurate gas measurement, the BLM is proposing to clarify that it is the reference inside diameter of the meter tube that is required on the verification documentation.

Proposed § 3175.92(e)(1) would change the amount of time an operator has to notify the BLM prior to performing a verification after installation or following a repair. This rule would change the timeframe to 1 business day. The existing regulation requires a minimum of a 72-hour notice prior to performing the verification. The original 72-hour requirement does not allow for sudden changes in scheduling due to unforeseen field conditions. The change to 1 business day would allow operators to provide a more accurate notification to the BLM.

Proposed § 3175.92(e)(2) would modify the wording in the time frame for notifying the BLM of a routine verification. Under existing § 3175.92(e)(2), operators must notify the AO at least 72 hours before performing a verification or submit a monthly or quarterly schedule of verifications. Industry has expressed concern regarding the logistics of scheduling verifications, which can be difficult even 72 hours in advance. The purpose of this requirement is to give the BLM some idea of when verifications occur in order to schedule the witnessing of the verification. After considering the industry concerns, the BLM is proposing to modify the requirement to allow operators to either provide at least 72-hours' notice to the AO or submit a list of FMPs that the operator plans to verify over the next month or next quarter. The operator would no longer have to notify the BLM or submit a schedule of when each FMP would be verified. This list would show all verifications planned for that month or quarter, but not the specific day for each location. The BLM believes the list of wells an operator intends to verify provides enough information to prioritize which verifications the BLM should witness. The BLM would then contact the operator to determine exactly when the operator would verify a given FMP.

Proposed § 3175.92(f) would clarify the threshold that triggers the requirement to submit amended OGOR and royalty reports to ONRR. Under existing § 3175.92(f) amended reports are required if the verification error is greater than 2 percent or 2 Mcf/day, whichever is greater. The intent of this requirement in the existing regulations is not to require amended reports for an error of 2 Mcf/day or less, regardless of the error expressed as a percentage of the average flow rate. Although the current wording is technically correct, it has caused confusion. Therefore, the BLM is proposing to change the wording to read ''. . . if the verification error is greater than 2 percent and 2 Mcf/day. . . .'' As with the current wording, the error would have to meet both thresholds in order to trigger the submission of amended reports.

3175.93 Integration Statements

Existing and proposed § 3175.93 contain the documentation requirements for integration statements. Proposed § 3175.93(d) would require the reference inside diameter of the meter tube to be documented on the integration statement. As discussed previously, the reference inside diameter is required for proper flow-rate calculation. The existing regulations require the inside diameter of the meter tube to be documented on site, but it is not clear which specific inside diameter is required. As the purpose of requiring the information is to verify accurate gas measurement, the BLM is proposing to clarify that it is the reference inside diameter of the meter tube that is required.

3175.100 Electronic Gas Measurement (Secondary and Tertiary Devices)

Existing and proposed § 3175.100 provide an overview of the regulatory requirements of EGM systems based on FMP tier. Proposed Table 1 to proposed § 3175.100, would change the frequency of routine verifications for high- and very-high-volume FMPs to every 6 months for both tiers. The existing regulation requires routine verifications at a 3-month frequency for both tiers. The BLM requires routine verifications because all devices, including the transducers used in EGM systems, tend to drift, or lose their accuracy over time. In a verification, the reading of the transducer is compared to the reading of a certified pressure or temperature device. If the reading is outside the allowable tolerances defined in existing

§ 3175.102(c)(6), then the transducer must be adjusted, or calibrated, to match the reading from the certified pressure device. The BLM is proposing to reduce the frequency of verification because it has been the BLM's experience, through witnessing the verification of EGM systems that transducers rarely drift outside of the allowable tolerance. The BLM believes that most transducers in use today are stable enough that the verification frequency can be reduced to every 6 months without adding significant risk to measurement. In addition, the BLM believes that the human interaction with the transducers and flow computer during a verification can introduce greater error and uncertainty than leaving them alone. The BLM seeks comments on this proposed change.

3175.101 Installation and Operation of Electronic Gas Measurement Systems

Existing and proposed § 3175.101 define the installation and operation requirements of EGM systems. The proposed rule would clarify parts of the requirements for the connection of EGM devices and modify the on-site information requirements.

Under § 3175.101(a) of the proposed rule, the BLM would establish requirements specific to gauge lines. While the revised requirements would not change from those in existing § 3175.101(a), the section would be re-organized to separate out requirements that are specific to gauge lines and requirements that are specific to manifold ports and valves (see proposed § 3175.101(a)(2)). The requirements for both gauge lines and manifold ports and valves are combined under existing § 3175.101(a), which has caused some confusion, especially relating to required minimum diameters. The proposed rule would also clarify that the gauge-line requirements are only applicable if gauge lines are used. At many EGM system installations, the manifold and transducers are placed directly on top of the pressure taps without using gauge lines. This reduces costs and may provide better measurement than using gauge lines to connect the pressure taps, manifold, and transducers. The existing rule resulted in some confusion as to what applies when gauge lines are not used.

Proposed § 3175.101(a)(2) would revise the language in the existing regulation to specify that valves, including those in manifolds, would have full opening internal diameters of not less than ⅜ inch. See the previous discussion of proposed § 3175.91(a)(2).

Proposed new § 3175.101(b)(4) would modify the existing requirement that operators display the software version at the FMP location. The proposed language would limit that requirement to high- and very-high volume FMPs. This would avoid forcing many existing locations to update equipment to meet the regulation. The BLM feels that the current requirement imposes an undue burden on operators while generating little benefit to royalty accountability.

Proposed new § 3175.101(b)(6) would modify a provision in § 3175.101(b)(5) of the existing regulation that requires operators to either display previous-period averages for differential pressure, static pressure, and temperature, or post a QTR on-site that is no more than 31 days old. A QTR includes average values of differential pressure, static pressure, and temperature for the month. The purpose of this requirement is twofold. First, when performing an on-site inspection, BLM inspectors need to know the previous period average differential pressure, static pressure, and flowing temperature to determine if the meter is operating within the volume uncertainty limits defined in § 3175.31(a) of both the proposed and existing regulations. Second, when witnessing a meter verification, BLM inspectors need to know the averages to ensure that operators test the differential pressure, static pressure, and temperature transducers at those average values. Operators use the results of verifications at these average values to determine if they will have to submit amended reports as required under § 3175.102(g).

During implementation of the existing regulations, industry has found that many of their flow computers are not capable of displaying previous-period averages and that they must post the most recent QTRs at these locations. Industry has expressed concerns about the expense and logistical difficulties of posting a new QTR every month at every location where the flow computer is not capable of displaying the average values automatically. For locations that are not inside a meter house, the QTR must also be weather resistant which increases the time and expense of compliance. The BLM has also heard complaints that because the BLM inspects only a small percentage of FMPs every year, most of the time the BLM does not use the QTRs posted on site.

After consideration of these concerns, the BLM is proposing a modification to the QTR posting requirement in the existing regulations. Instead of requiring operators to post recent QTRs at every location that does not have a flow computer capable of displaying the required average values, the BLM would require operators to submit the most recent QTR when the BLM requests it. The operator could submit the QTR through email or fax prior to the BLM going out to inspect the facility. The BLM believes this change would not affect its inspections because the inspectors would still have access to the average values needed for transducer verifications and uncertainty determination.

Proposed § 3175.101(c)(3) would change ''Elevation of the FMP'' to ''Elevation of or atmospheric pressure at the FMP'' in the list of data that must be maintained on site for EGM systems. This would allow for operators to provide either the FMP elevation or the atmospheric pressure at the FMP. The BLM is proposing to allow atmospheric pressure to be posted at the FMP instead of meter elevation because either value will allow the BLM to verify the flow computer. Atmospheric pressure tends to be more readily available to operators and the BLM will be able to verify the atmospheric pressure during an inspection. The atmospheric pressure can influence the flow-rate calculation in two ways. If the meter is using a gauge-pressure transducer, then the flow computer must add the value of the atmospheric pressure programmed into it to the pressure reading from the transducer to calculate flow rate. If the meter is using an absolute pressure transducer, then the operator must know the value of atmospheric pressure when the transducer is verified or calibrated. In either case, if the wrong value of atmospheric pressure is used, the flow-rate calculation will be in error. The lower the pressure at the FMP, the more significant the error becomes. If the atmospheric pressure is posted on site, then the BLM can verify that pressure—at least to some degree—by using GPS elevation or the elevation listed on the APD, and cross-reference that elevation to the table in Appendix A of the existing rule.

Proposed § 3175.101(c)(5) would require the reference inside diameter of the meter tube to be maintained at the FMP. As discussed earlier, the reference inside diameter is required for proper flow-rate calculation. The existing regulations require the inside diameter of the meter tube to be documented on site, but it is not clear which specific inside diameter is required. As the purpose of requiring the information is to verify accurate gas measurement, the BLM is proposing to clarify that it is the reference inside diameter of the meter tube that is required.

Proposed § 3175.101(c)(12) would clarify the requirement to maintain on site the date of the last primary-device

inspection. The current wording has caused confusion because operators are not sure whether they are supposed to post the last orifice-plate inspection date or the last meter-tube inspection date, since both of these are considered part of the primary device under the definition in § 3175.10. The intent of the requirement was to post the last orifice-plate inspection date. The proposed rule would clarify that this requirement is specific to the orifice plate, or other primary device approved by the BLM.

Proposed § 3175.101(c)(13) would add a requirement that the operator post the last meter-tube inspection date. The BLM is proposing to add this requirement in order to allow BLM inspectors to verify that the operator is inspecting the meter tube at the frequency required under proposed § 3175.80(l) and (m). The operator would post either the last basic meter-tube inspection date or the last detailed meter-tube inspection date, whichever is more recent.

3175.102 Verification and Calibration of Electronic Gas Measurement Systems

Existing and proposed § 3175.102 define the verification and calibration requirements for EGM systems. The proposed update would modify and clarify this section, with a particular focus on the methods used to determine atmospheric pressure, verification frequency, stability and drift, reporting requirements. The proposed rule would also address confusion with respect to notification requirements.

Proposed § 3175.102(a)(3) would change the required accuracy of barometers used in the verification of absolute-pressure transducers from ±0.05 psi to ±0.06 psi (±4 millibars). Under both the proposed and existing regulation, operators have the option to use a barometer when verifying the ''zero'' reading of absolute-pressure transducers. With this option, the operator would first vent the transducer to the atmosphere, take a barometric pressure reading from the barometer, and then calibrate the transducer to read the same as the barometer. This option in not available for gauge-pressure transducers. Because this option requires input from a barometer, the uncertainty of the barometer will affect the overall uncertainty of the measurement. Most barometers that are traceable to the National Institute of Standards and Technology have an uncertainty of ±4 millibars, which is equivalent to about ±0.06 psi. Barometers that have lower uncertainties are more expensive and more difficult to find. The BLM believes changing the uncertainty requirement to ±0.06 psi would make compliant barometers more accessible without adding significant uncertainty to the overall measurement.

Proposed new § 3175.102(b)(1)(ii) would add a new maximum allowable time in days between any two routine EGM system verifications by referencing Appendix B. See the discussion of Appendix B later.

New § 3175.102(b)(1)(iii) would add language to the routine verification frequency requirements that would exempt an FMP in non-flowing status from routine verifications. The new language would instead require that the verification be conducted within 15 days after the flow resumes. See the previous discussion of § 3175.92(b)(3).

The BLM is proposing to remove the requirement of existing § 3175.102(c)(3) that the operator replace any transducer that is found to have exceeded its specification for stability or drift on two consecutive verifications. Note that the BLM believes the terms ''stability'' and ''drift'' are synonymous. When existing § 3175.130 was originally proposed in October 2015, the BLM would have required that operators perform a long-term stability test for transducers as part of the BLM's transducer approval process. The BLM found that the manufacturer's specifications for stability or drift were not well defined, not consistently interpreted, and that the manufacturers did not reveal their methods for determining this specification. The BLM ultimately removed this proposed requirement at the final rule stage, due to the cost of performing this test. The BLM included § 3175.102(c)(3) in the final (existing) rule as an attempt to verify and enforce the manufacturer's specifications for stability or drift, in lieu of requiring a test for stability or drift.

The BLM is proposing to delete this requirement because there is currently no practical way for the BLM to determine how much of the error determined during a transducer verification is due to stability or drift. When an operator verifies a transducer, the only data derived from the verification is the difference between the reading from the certified test device and the reading from the transducer. The error could be due to a number of factors, such as transducer uncertainty, ambient temperature effects, static pressure effects (for differential pressure transducers), or human errors made during the previous calibration. The only way to determine stability or drift from the verification is to back out all the other causes, which would require a complex series of calculations and a number of assumptions, which exceeds the BLM's current capacity.

Proposed § 3175.101(e)(1)(iii) would require the reference inside diameter of the meter tube to be documented. As discussed earlier, the reference inside diameter is required for proper flow-rate calculation. The existing regulations require the inside diameter of the meter tube to be documented on site, but it is not clear which specific inside diameter is required. As the purpose of requiring the information is to verify accurate gas measurement, the BLM is proposing to clarify that it is the reference inside diameter of the meter tube that is required.

Proposed § 3175.102(f)(1) would change the amount of time an operator has to notify the BLM prior to performing a verification after installation or following a repair. The BLM would change the timeframe for notification from a minimum of 72 hours to 1 business day. The original 72-hour requirement does not allow for sudden changes in scheduling due to unforeseen field conditions. The change to 1 business day would allow operators to provide a more accurate notification to the BLM.

Proposed § 3175.102(f)(2) would modify the wording in the existing regulation to address industry concerns related to providing advance notice to the AO. See the earlier discussion of § 3175.92(e)(2). Under § 3175.102(f)(2) of the existing and proposed rule, operators must notify the AO at least 72 hours before performing a verification or submit a monthly or quarterly schedule of verifications. The proposed rule clarifies that the verification schedule need only identify the FMPs that will be verified during the month or quarter, rather than the date of each verification.

Proposed § 3175.102(g) would clarify the threshold that triggers the requirement for operators to submit amended OGOR and royalty reports to ONRR. Under § 3175.102(g) of the existing regulation, amended reports are required if the verification error is greater than 2 percent or 2 Mcf/day, whichever is greater. Proposed § 3175.102(g) clarifies the BLM's intent not to require amended reports for an error of 2 Mcf/day or less, regardless of the error expressed as a percentage of the average flow rate. See the previous discussion of § 3175.92(f).

3175.103 Flow Rate, Volume, and Average Value Calculation

Existing and proposed § 3175.103 provides the minimum requirements for performing flow-rate, volume, and average-value calculations. The proposed rule would simplify some of

the language in this section to reduce confusion. Proposed § 3175.103(b) would require that the atmospheric pressure used to convert static pressure expressed in units of pounds per square inch gauge (psig) to units of pounds per square inch absolute (psia) must be determined using Appendix A of subpart 3175. The existing regulation requires the use of API 21.1, Annex B for the psig-to-psia conversion. Appendix A of subpart 3175 contains the same information as API 21.1, Annex B and does not require using secondary source material. This change to the rule would also be consistent with proposed § 3175.94(b) and other sections of this rule that require the use of atmospheric pressure.

3175.104 Logs and Records

Existing § 3175.104 defines the requirements for records and logs. The current regulation was found to be problematic and impose requirements that are beyond the capabilities of many flow computers currently in operation. The proposed regulation would modify the existing regulation to allow for the use of existing equipment while preserving accountability requirements.

Proposed § 3175.104(a)(2) would modify the existing regulation by changing the phrase ''decimal places'' with the phrase ''significant digits,'' as it relates to QTRs. The existing regulation requires the volume, flow time, and integral value or average extension to be reported to 5 decimal places and the average differential pressure, static pressure, and temperature to be reported to 3 decimal places. Industry has expressed concern that 5 decimal places can be impossible to achieve when dealing with large numbers. For example, reporting a volume of 1224.65219 Mcf of gas (5 decimal places) would exceed the number of significant digits stored in the flow computer or the measurement data system.

The BLM acknowledges these concerns and is proposing to require volume, flow time, and integral value or average extension to be reported to 5 significant digits and the average differential pressure, static pressure, and temperature to be reported to 3 significant digits. When the existing regulation was proposed in October of 2015, it would have required ''significant digits.'' However, the BLM changed the language to ''decimal places'' in the final rule based on comments stating that reporting to a specified number of significant digits would be unworkable. This solution resulted in unintended consequences that might require many operators to modify or replace existing gas measurement systems. The goal of specifying the number of significant digits is to ensure the data provides enough resolution for the BLM to perform meaningful recalculations of the volume reported on the QTR. Further research into the issue shows that ''significant digits'' provides a more workable approach than ''decimal places.'' The BLM is seeking comment on this proposed change, and requests data to support the use of one term over the other.

3175.112 Sampling Probe and Tubing

Existing § 3175.112 contains the requirements for sample probes, tubing, and components of the sampling system. The proposed rule would clarify these requirements, specifically as they relate to material of components.

Proposed § 3175.112(c)(4) retains the prohibition on membranes, screens, or filters at any point in the sample probe. The BLM received several comments objecting to this prohibition in the current rule, but no data has been submitted to support the use of such devices. The BLM requests comments and data on this subject.

Proposed § 3175.112(d) would modify the language in the existing regulation to clarify the types of materials that could be used in gas sampling-system components. The existing regulation requires that sample tubing connecting the sample probe to the sample container or analyzer be made out of stainless steel or nylon 11. Operators have expressed confusion over whether other components of the sampling system, such as valves and nipples, must also be constructed of specific materials. The BLM agrees that the wording is not clear for components other than the sample tubing and is proposing to clarify that the material requirement applies to any component of the sampling system into which gas flows during the sample process. The goal of the requirement is to prevent alteration of the gas sample due to contact with materials such as carbon steel or aluminum. These and other materials can react with and contaminate the gas. The new wording of this requirement would also clarify that only components that have gas flow through or into them must be constructed of stainless steel or nylon 11. The requirement to use stainless steel or nylon 11 is based on API MPMS 14.1 and GPA 2166–17.

3175.113 Spot Samples—General Requirements

Existing § 3175.113 establishes the general requirements for spot sampling. The proposed rule would improve and clarify these requirements, specifically as they relate to non-flowing status, sampling notification, cylinder cleaning requirements, and the use of portable GC for spot sampling.

Proposed § 3175.113(a)(1) would modify the wording of existing § 3175.113(a) to clarify that the FMP must be flowing when a gas sample is taken. The existing regulation implies this, but is not clear. The BLM is proposing this change because the current wording of the standard makes it difficult for the BLM to enforce this implied requirement when witnessing an operator taking a gas sample. A gas sample taken from a non-flowing meter is not representative of the gas flowing through the meter because a static gas volume can stratify based on the different densities of the components in the gas and the composition and heating value determined from a stratified gas volume will depend on where in the stratified column the sample was taken.

Proposed § 3175.113(a)(2) would modify the wording of existing § 3175.113(a) to clarify what is meant by a ''non-flowing status'' at the time of sampling. This change is proposed in response to some operators interpreting the existing requirement to mean that any time an FMP is shut in, they had to take a sample within 15 days. For plunger lift and other intermittent-flowing FMPs, this would be unworkable.

The existing requirement was intended to apply to FMPs that were shut in seasonally or for long periods, not to intermittently flowing FMPs. For example, a low-volume FMP requires a sample every 6 months, not to exceed 195 days between the samples. If an operator takes a gas sample at a low-volume FMP on February 1, 2019, the next sample would be due no later than August 15, 2019. If the operator shut its wells in from June 1 to September 1, it would not be able to take the next sample by August 15, 2019, as required, because the well would not be flowing and proposed § 3175.113(a)(1) requires FMPs to be flowing when a sample is taken. The intent of proposed § 3175.113(a)(2) is to clarify that if the FMP is in non-flowing status when the sample is due, the operator has 15 days from the day flow is re-initiated to take a sample. In the earlier example, assuming the wells flowing through the FMP were brought back on line on September 1, 2019, the operator would have until September 15, 2019, to take a sample.

Under existing § 3175.113(b), operators must notify the AO at least 72 hours before taking a sample or submit

a monthly or quarterly schedule of spot samples. Industry has expressed concern regarding the logistics of scheduling gas samples, which can be difficult even 72 hours in advance. The purpose of this requirement is to give the BLM some idea of when gas samples are taken in order for the BLM to be able to witness the sampling. After considering industry concerns, the BLM is proposing to modify this requirement to allow operators to submit a list of FMPs that the operator plans to sample over the next month or next quarter. The operator would no longer have to notify the BLM or submit a schedule of when each FMP would be sampled. The BLM believes the list of wells an operator intends to sample would provide enough information to prioritize which gas samplings the BLM should witness. The BLM would then contact the operator to find out when the operator expects to sample a given FMP.

Proposed § 3175.113(c)(3) would modify the language in existing § 3175.113(c)(3) by updating the GPA reference from GPA 2166–05 to GPA 2166–17. Under proposed § 3175.30, the BLM would incorporate GPA 2166–17, which is the latest published version of the standard.

Proposed § 3175.113(c)(3) would also allow operators to seek approval from the PMT for alternative methods of cleaning sample cylinders. The BLM is aware of several alternative sample-cylinder cleaning methods. The PMT would analyze laboratory test data that compares the effectiveness of the alternative method with the effectiveness of the method in Appendix A of GPA 2166–17. If the alternative method produces similar or better results, the PMT would recommend that the BLM approve the method, with conditions of approval, if necessary, and add it to the list of approved equipment and procedures on the BLM's website. Once approved, the alternative method would be available to all operators on Federal or Indian leases without any further review or approval required.

Proposed § 3175.113(d)(1) would prohibit the use of sampling separators while spot sampling with portable gas chromatographs. Sampling separators can cause condensation or vaporization of the heavier hydrocarbons in the gas stream due to temperature differences caused by the separator. The seventh edition of API MPMS Chapter 14, section 1 does not recommend using sampling separators due to the potential the separator may cause heat transfer. GPA Standard 2166–05 also cautions against the use of sampling separators, stating that research has shown the misuse of separators can cause sample distortion, and that a separator is only useful for streams containing unwanted hydrocarbon droplets, amine, glycol, water, or other contaminants. GPA Standard 2166–05 also states that for clean, dry sample streams above the hydrocarbon dew point, the separator serves no useful purpose and could corrupt the sample. The BLM believes sampling separators create the risk that operators using this equipment will collect unrepresentative samples; the BLM is therefore proposing to prohibit their use in portable gas chromatograph sampling.

Under the proposed rule, the BLM would remove § 3175.113(d)(5) and (d)(6) of the existing regulations and replace them with different requirements (§ 3175.113(d)(5) through (d)(8)). These sections of the existing regulations require operators using portable gas chromatographs to run at least three analyses when sampling a low- or very-low-volume FMP and, for high- and very-high-volume FMPs, continue to take samples until the difference between three consecutive samples is 16 British thermal units per standard cubic foot (Btu/scf) or less for high-volume FMPs and 8 Btu/scf or less for very-high volume FMPs. The intent of these requirements was to provide the BLM with some objective quality assurance that the portable GC and associated sampling system are working properly. Operators have expressed concern that this requirement not only increases their documentation burdens, but can also be difficult, if not impossible, to achieve. Because existing § 3175.113(d)(6) requires the heating value reported on the OGOR Part B to be the mean or median of the three heating values obtained under this section, operators would have to maintain a record of all three analyses that were performed.

Current practice is for operators to maintain only documentation of the analysis they use for reporting royalty. This requirement has therefore resulted in a significant increase in the amount of documentation required. Also, a portable GC samples a live gas stream, unlike a laboratory GC that is sampling from an isolated volume contained in a sample cylinder. The composition of the live gas stream is constantly changing, which can make it difficult to obtain three consecutive samples that are within the tolerances required under existing § 3175.113(d)(5). Many operators stated that these requirements were so onerous that they went away from the use of GCs and opted for other spot sampling methods, like the purge and fill method. In 2018, an industry group developed a standard operating procedure (SOP) that contained a number of objective measures to help ensure quality control when using a portable GC. The BLM recommended the use of this SOP in Washington Office Instruction Memorandum (IM) 2018–069. Proposed §§ 3175.113(d)(5) through 3175.113(d)(8) would incorporate many of the recommendations that were included in the SOP. The BLM believes that the objectives of existing § 3175(d)(5) and (d)(6) can be met using the methods in proposed § 3175(d)(5) through (d)(8).

Proposed § 3175.113(d)(5) would require the regulator for the GC to be heated or insulated to maintain the temperature of the sampled gas to at least 30 °F above the hydrocarbon dew point. The hydrocarbon dew point is the temperature below which the heavier hydrocarbons in the gas begin to condense into a liquid phase. Capturing a representative sample of the gas flowing through the FMP requires the gas temperature to be maintained above the hydrocarbon dew point so that none of the gas components drop out of the gas stream prior to entering the GC. For most parts of the sampling system, the requirement in existing § 3175.111(b) for maintaining the temperature of all of the sampling components to at least the hydrocarbon dew point is sufficient to prevent condensation. However, this requirement is not sufficient with pressure regulators because the drop in pressure through the regulator causes gas to expand, and the expanding gas causes additional cooling (known as the Joule-Thompson effect).

Proposed § 3175.113(d)(5) is similar to existing § 3175.112(c)(2), which requires external regulators that are part of the sample probe to be heated to 30 °F above the hydrocarbon dew point. The proposed requirement would be specific to regulators that are part of a GC sampling system, but not part of the sampling probe. The rationale for existing § 3175.112(c)(2) is the same as the rationale for this proposed requirement.

Proposed § 3175.113(d)(6) would require that gas chromatograph pressure regulators be set to the same pressure setting as the pressure at which the portable GC was calibrated or verified. Gas chromatographs work by injecting the gas sample through several columns, which segregate the individual components of the natural gas. A detector then measures the amount of each component as it exits the GC. The pressure of the gas coming into the GC can influence the rate at which it flows through the columns and the detector. This change in rate can alter the results from the GC. In order to ensure

accuracy, the gas pressure applied to the GC during field testing must match the gas pressure at which the GC is calibrated or verified.

Proposed § 3175.113(d)(7) would prohibit the first GC analysis at an FMP from being used to determine the heating value. The first run of gas through the GC may contain contaminates from previous samples and may not be representative of the gas flowing through the FMP. The first run should be used to purge the entire line and system with gas from the FMP being sampled.

Proposed § 3175.113(d)(8) would require that the sample line be purged and vented for a minimum of 2 minutes before sampling at each location. The BLM proposes this to maintain purity of the sample taken from the sample location, and to reduce any chance of contaminants from prior samples being mixed in with the current sample.

3175.114 Spot Samples—Allowable Methods

Existing § 3175.114 defines the allowable methods for spot sampling. The proposed rule would update the references to industry standard to make them current. Proposed § 3175.114(a) would update the GPA reference in paragraphs (a)(1), (a)(2), and (a)(3) to the latest published version (GPA 2166–17) that is incorporated by reference in § 3175.30. The BLM is not aware of any substantive changes between the version incorporated by reference in the existing rule (GPA 2166–05) and GPA 2166–17, as it relates to the three references discussed here.

3175.115 Spot Samples—Frequency

Existing § 3175.115 details the frequency requirements for spot sampling based on the FMP tier of the meter being sampled. The proposed rule would make compliance with these requirements more achievable for operators, while preserving the BLM's need for heating value determination.

The industry has expressed concerns over the requirements in existing § 3175.115(b). To address some of those concerns the BLM is proposing to modify the scope of the requirement to reduce the number of overall meters that will be affected. This paragraph allows the BLM to change the sampling frequency on high- and very-high-volume FMPs to achieve a set level of average annual heating value uncertainty as described in existing § 3175.31(b), after the FMP has been in operation for 2 years. The primary concern expressed by industry was about the expense of taking samples every 2 weeks and installing composite samplers or on-line GCs at very-high-volume FMPs, as required in the existing regulation. Industry also stated that many of their FMPs have highly variable heating values, which put them at risk of having to conduct 2-week sampling and installing the required composite sampling systems or on-line GCs. Industry argued that heating value uncertainty is a function of the quality of sampling and analysis and is not the same as the variability in heating value from sample to sample.

While the BLM is not proposing any changes to this section specifically, it is proposing changes to other sections that the BLM believes would alleviate much of the industry's concern. First, the BLM would increase the average annual heating value uncertainty from + or −1 percent to + or −2 percent for very-high-volume FMPs and from + or −2 percent to + or −3 percent for high-volume FMPs (see earlier discussion of § 3175.31(b)(1) and (b)(2), respectively). The BLM would also eliminate the requirement to install composite samplers or on-line GCs at very-high-volume FMPs (see discussion of § 3175.115(b)(5) earlier). The BLM believes these two changes would significantly reduce the potential costs imposed by this section.

The BLM does not agree with industry's assertion that average annual heating value uncertainty is an inappropriate method of addressing spot sampling frequency and heating value variability from sample to sample. For more information, please see the preamble discussion of average annual heating value uncertainty in the proposed and final rule documents for existing subpart 3175 (80 FR 61675 and 81 FR 81583).

The BLM would delete existing § 3175.115(b)(5), which requires operators to install composite samplers or on-line GCs at very-high-volume FMPs when the BLM determines that the required level of average annual heating value uncertainty at an FMP cannot be achieved through spot sampling. The BLM is proposing to delete this requirement because it believes that the proposed increase in average annual heating value uncertainty would render this requirement largely unnecessary. Typically, the FMPs that are subject to the largest variability in heating value from sample to sample are lower-volume FMPs that are associated with plunger-lift operations. Very-high-volume FMPs tend to measure gas produced from newly drilled wells that do not need plunger lifts and have less heating value variability. In response to comments on the proposed rule for the existing regulations (see preamble discussion at 81 FR 81585), the BLM concluded that roughly 25 percent of the estimated 900 very-high-volume FMPs nationwide would not be able to meet the ±1 percent performance requirement for average annual heating value uncertainty in § 3175.31 through spot sampling. These FMPs under the existing regulation require the installation of an on-line GC or composite sampling system. The 25 percent figure is based on a required average annual heating value uncertainty of ±1 percent. By increasing the uncertainty from ±1 percent to ±2 percent, as proposed in § 3175.31(b)(2), the BLM estimates the number of very-high-volume FMPs that would require a composite sampler or on-line GC would drop by a factor of 4. This would reduce the number of very-high-volume FMPs requiring a composite sampling system or an on-line GC from 25 percent to roughly 6 percent. The BLM does not believe it is necessary to include a requirement that would only apply to such a small number of FMPs.

Proposed § 3175.115(c) would move the existing Table 1 to § 3175.115 (Maximum Time Between Samples) to Appendix B of this subpart, and would refer the readers to Appendix B for this information. See the discussion of Appendix B, later.

Proposed § 3175.115(d) would increase the amount of time operators would have to install a composite sampling system or on-line GC from 30 days after the due date of the next sample to 90 days after the due date of the next sample. This proposed change is based on industry concerns that the lead-time operators need to plan for, order, and install on-line GCs or composite sampling systems is commonly greater than 30 days. During this 90-day period an operator would not have to take spot samples. While this will reduce heating value accountability during that period, the BLM believes that the potential benefits of an operator installing an on-line GC or composite sampling system, providing a more representative sample over the sampling period, outweigh the temporary loss of spot samples during the 90-day period.

3175.116 Composite Sampling Methods

Existing § 3175.116 defines the requirements for composite sampling. The existing regulation contains limited guidance on the use of this method. The proposed rule would provide clarity for operators and inspectors on this sampling method. The BLM is proposing several additional

requirements for composite sampling systems as discussed later. However, the BLM is not aware of any industry standards for composite samplers other than API MPMS 14.1.12.1. As a result, the BLM is soliciting information from the public regarding best practices for the design, installation and use of composite samplers.

Proposed § 3175.116(c) would add a requirement that sample cylinders used in composite sampling systems comply with the general spot-sample requirements under § 3175.113(c). The existing regulation requires that sample cylinders be sized to ensure that the capacity is not exceeded within the normal collection frequency; however, it does not impose any additional requirements such as those for cylinders used in spot sampling. There are no requirements for the materials that are used to construct and clean the cylinders. The BLM believes that the omission of these requirements for composite sample systems was an oversight and will not add any additional burdens to industry, as they represent common industry best practice despite not being specifically stated in the referenced standard, API MPMS 14.1.12.1.

Proposed § 3175.116(d) would add a new requirement that all components of the sampling system be heated to at least 30 °F over the hydrocarbon dew point at all times. The BLM would add this requirement to prevent condensation and compensate for the effects of cooling under the Joule-Thompson effect as pressure is reduced when the gas runs through valves and fittings.

3175.117 On-Line Gas Chromatographs

Proposed § 3175.117(a) would update the reference to GPA 2166–05, Appendix D, in the existing regulation, with GPA 2166–17, Appendix D, in the proposed rule. The BLM is not aware of any change in Appendix D from the previous version to the newest version. The BLM also requests comment and information from the public regarding industry standards or best practices for the selection, installation, and operation of on-line GCs.

3175.118 Gas Chromatograph Requirements

Existing § 3175.118 contains requirements for gas chromatographs. The proposed rule would update the references to industry standards to the most current editions and address the requirements for gas analysis more clearly, specifically addressing the confusion between the terms ''extended analysis'' and ''nonanes+''.

Proposed § 3175.118(c)(2) would update the referenced industry standard from GPA 2198–03 in the existing rule, to GPA 2198–16 in the proposed rule in order to stay up-to-date with the latest standards for verification and calibration gas standards. There are two changes in the updated GPA standard. First, GPA 2198–16 requires that the concentration of the gas used for verification and calibration be closer to the expected concentration of the gas sampled in the field than what was required under GPA 2198–03. While the older standard requires the concentration of each component to be no less than one-half the concentration expected in the field, it did not place an upper limit for the concentration. The GPA 2198–16 standard places an upper limit of no more than double the expected concentration of the gas sampled in the field. For example, if the expected concentration of propane in the field sample were 4 mole percent, the concentration of propane in the calibration gas could be no less than 2 mole percent and no more than 8 mole percent, according the GPA 2198 standard. In addition, the GPA 2198–16 standard includes steps for the operator to take if the calibration gas has dropped below its hydrocarbon dew point and recommends heating the standard to 30 °F above the hydrocarbon dew point for 4 hours before use. The older standard recommends that the calibration gas should be heated to 20 °F above hydrocarbon dew point for 12 hours before use. The BLM does not believe either of these changes would place significant burdens on the operator.

The proposed updated reference to GPA 2198–16 would also apply to proposed § 3175.118(c)(3) and § 3175.118(c)(4), which refer to GPA 2198–16, Section 6 and Section 5, respectively. The existing regulation references GPA 2198–03, Section 5 and Section 6. The only difference between these sections is the inclusion of reference standards for natural gas liquids. Because subpart 3175 only addresses natural gas, the inclusion of standards for natural gas liquids is not relevant to this rule.

Under existing § 3175.118(e) operators are required to perform extended analyses in accordance with GPA 2286–14. This proposed rule would remove this requirement. Existing § 3175.119(b) requires operators to determine the concentrations of hexanes, heptanes, octanes, and nonanes+, if the mole percent of hexanes+ exceeds 0.5 mole percent. In the development of the existing subpart 3175, the BLM accepted comments on the proposed rule that suggested the BLM incorporate GPA 2286–14, because it would set standards for analyzing hexanes, heptanes, octanes, and nonanes+. The BLM agreed with this comment and added existing § 3175.118(e) as a result. Also based on these comments, the BLM assumed that the term ''extended analysis'' was synonymous with the term ''C_9+'' or ''nonanes plus'' analysis. Since publication of the existing rule in November 2016, the BLM has determined that the term ''extended analysis'' has a different meaning than a C_9+ analysis and the incorporation of GPA 2286–14 is inappropriate for the BLM's intended purpose. The incorporated GPA 2286–14 standard requires a third column that separates hydrocarbons up through C_{14}. This is not needed in normal field conditions, because hydrocarbons above C_9, or nonane, rarely exist in sufficient quantities to affect the heating value of the gas due to the high hydrocarbon dew point of larger hydrocarbon molecules. To reduce unnecessary burden on industry while still meeting the desired intent of a more detailed analysis, the BLM proposes to only require C_9+ analysis. The new C_9+ analysis is discussed in the proposed regulation within the definition of nonanes+ at § 3175.10 and at § 3175.119. The requirement to use GPA 2286–14 represents an unnecessary burden to industry. Under the proposed rule, the BLM would delete the reference to extended analysis and remove the incorporation by reference for GPA 2286–14.

3175.119 Components To Analyze

Existing § 3175.119 defines the minimum requirements for component detail in gas analysis. The proposed modification to the language would alter those requirements based on detailed testing data that the BLM has received from Anadarko Petroleum showing when the greatest risk to royalty exists. All graphs shown in this section were provided by Anadarko.

Proposed § 3175.119(a)(7) would add flexibility to the requirement that gas must be analyzed for either C_6+ or C_9+. The existing regulation requires C_6+ to be analyzed when the concentration of C_6+ is 0.5 mole percent or less. Several operators have pointed out that this provision would prevent an operator from voluntarily performing a C_9+ analysis when the concentration of C_6+ was 0.5 mole percent or less. This was not the intent of the requirement because a C_9+ analysis would exceed the minimum standard of C_6+ and

would be acceptable to the BLM. As a result, the BLM proposes to change this requirement to clarify that a C_9+ would also fulfill this requirement. However, the BLM would also clarify that if an operator voluntarily performs a C_9+ analysis, they must include the individual concentrations of hexanes, heptanes, and octanes in the analysis.

Proposed § 3175.119(b) would require a C_9+ analysis when the C_6+ analysis exceeds 1 mole percent. The existing regulation requires a C_9+ analysis when the C_6+ analysis exceeds 0.5 mole percent. The BLM is proposing this change based on data provided by an operator who collected 2,466 gas samples and ran both a C_6+ and C_9+ on each sample. The following graph shows the difference in heating value between the C_6+ analysis and the C_9+ analysis for each sample as a function of the mole percent of C_6+. Note that a negative difference indicates that the C_6+ analysis yielded a lower heating value than the C_9+ analysis.

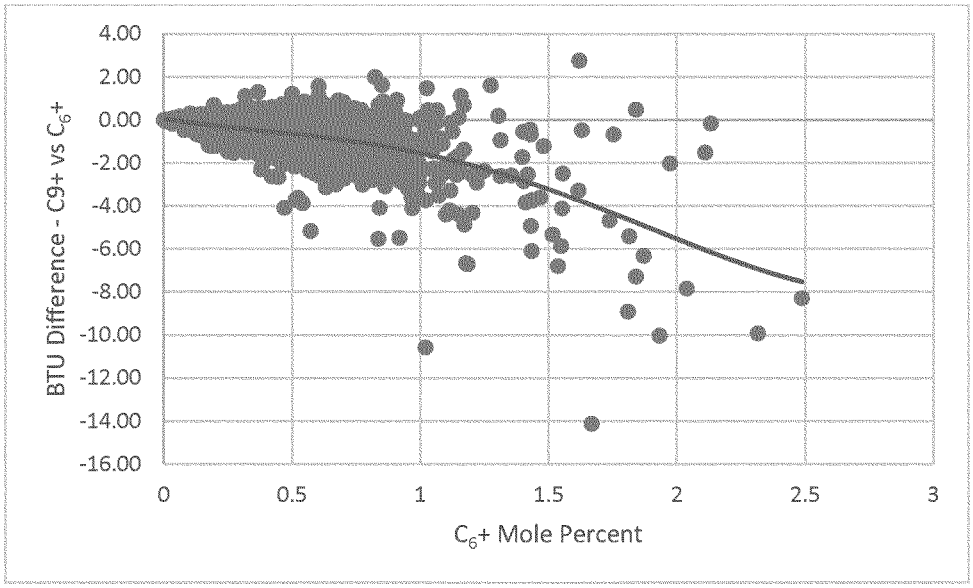

To analyze this data, the BLM created three frequency plots; the first plot (Plot 1) includes only the samples where the mole percent of C_6+ was between 0 and 0.5 mole percent, the second plot (Plot 2) includes only those samples where the mole percent of C_6+ was between 0.5 mole percent and one mole percent, and the third plot (Plot 3) includes only those samples where the C_6+ was 1 mole percent or greater. Each plot consists of ''buckets,'' where each bucket contains samples where the Btu difference using a C_6+ analysis and a C_9+ analysis is shown on the X-axis. The Y-axis shows how many samples fall into each bucket. For example, in Plot 1, 919 of the samples showed that there was no difference in heating value between using a C_6+ analysis and a C_9+ analysis and 671 of the samples showed that the C_6+ analysis resulted in a heating value one Btu/scf less than the C_9+ analysis.

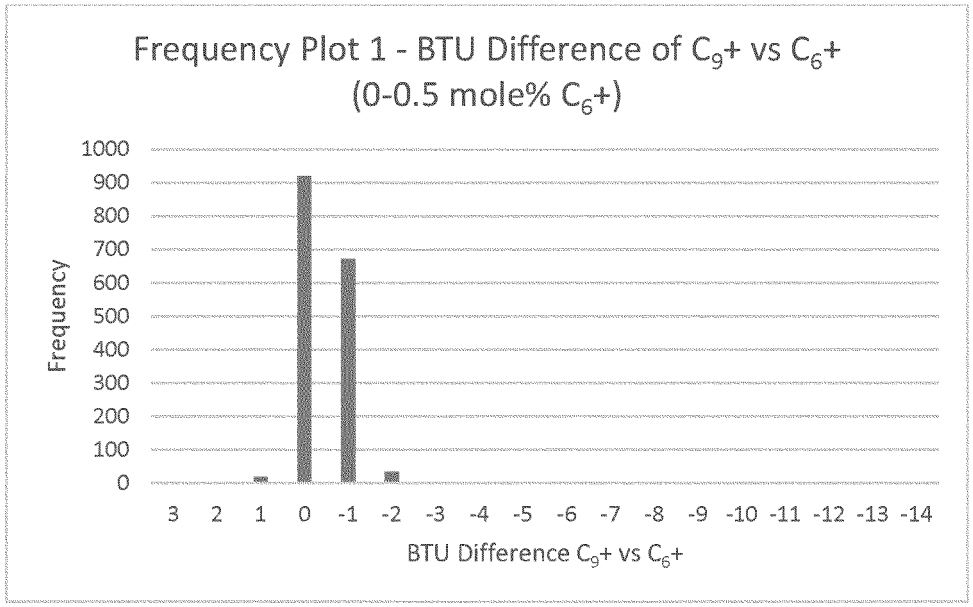

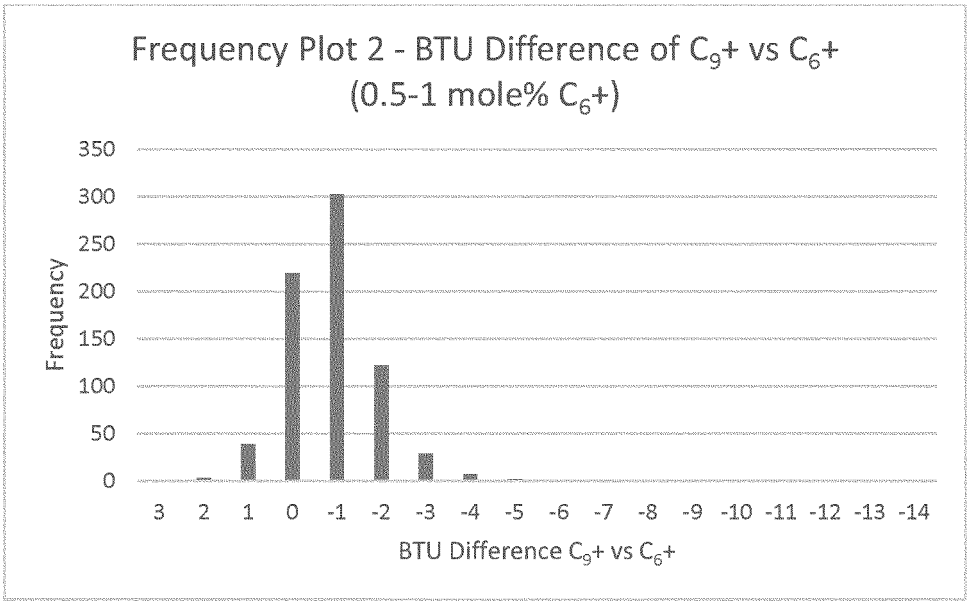

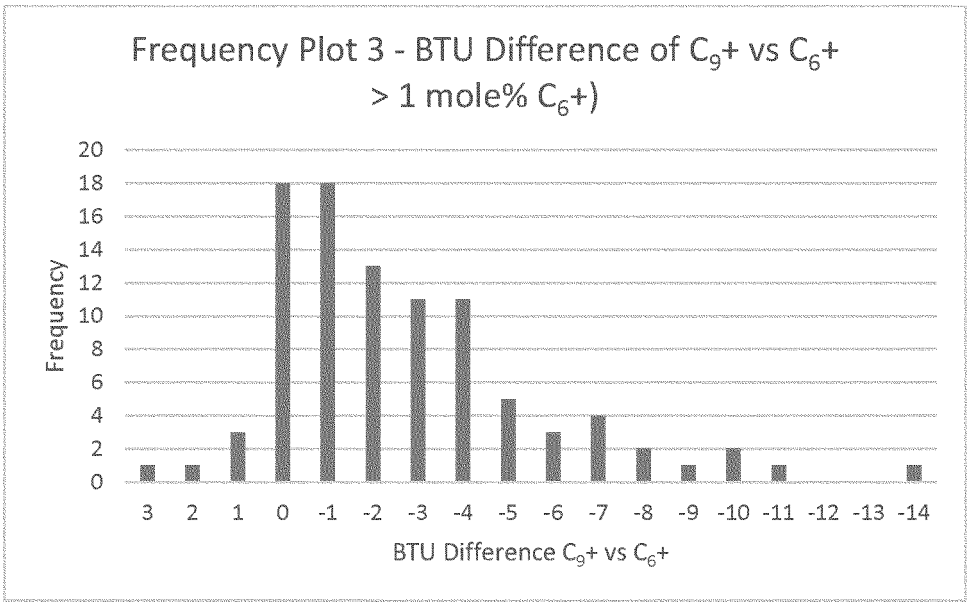

The following table summarizes the results from the three plots:

	Concentration of C_6+ (mole percent)		
	<0.5 (plot 1)	0.5–1.0 (plot 2)	>1.0 (plot 3)
Total samples	1,647	724	95
Average difference (Btu/scf)	−0.43	−0.87	−2.66
Median difference (Btu/scf)	0	−1	−2
Maximum heating value difference	−4	−6	−14

From the three plots and summary table, the BLM believes there is a clear bias of under-reporting of heating value that increases as the mole percent of C_6+ increases, when a C_6+ analysis is used by an operator instead of a C_9+ analysis. The absence of statistically significant bias is one of the performance goals of § 3175.31(c)

However, both the average and median difference between the heating values in a C_6+ analysis and C_9+ analysis are 1 Btu/scf or less for C_6+ concentrations of 1 mole percent or less (see Plots 1 and 2), which could be due to round-off error or otherwise considered as insignificant. The results from Plot 3 show an average difference

between a C_6+ analysis and a C_9+ analysis of 2.66 Btu/scf, a median difference of −2 Btu/scf, and a maximum difference of 14 Btu/scf. This analysis suggests that a C_9+ analysis should be required when the concentration of C_6+ exceeds 1 mole percent. To confirm this conclusion, the BLM also did an economic analysis.

In the development of the existing regulation, the BLM used a cost versus royalty-risk approach when determining thresholds. With this analysis, the threshold is set where the cost to an operator of implementing a requirement equals the amount of potential lost royalty if the higher standard is not met. For this analysis, the BLM made the following assumptions based on BLM field experience:

- Cost of C_6+ analysis: $100
- Cost of C_9+ analysis: $300
- Gas price: $3/MMBtu, $4/MMBtu
- Sample frequency: 360 days for high-volume FMPs and 180 days for very-high-volume FMPs
- Royalty rate: 12.5 percent

The BLM then determined the mole percent of C_6+ that resulted in $200 of lost royalty over the sampling period if a C_9+ analysis was not conducted. Two hundred dollars is the assumed difference in cost between a C_6+ analysis and a C_9+ analysis. Note that the sampling frequencies assume the operator is following the alternative C_9+ sampling schedule allowed in § 3175.119(c). The following figure shows the break-even point for C_9+ analysis as a function of average flow rate through the FMP. For example, for an FMP with an average flow rate of 2,000 Mcf/day and an assumed gas price of $4/MMBtu, a C_6+ mole percent threshold of 0.85 mole percent would be the break-even point. If the gas price were $3/MMBtu and an average FMP flow rate of 2,000 Mcf/day, a C_6+ mole percent of very close to 1 mole percent would be the break-even point.

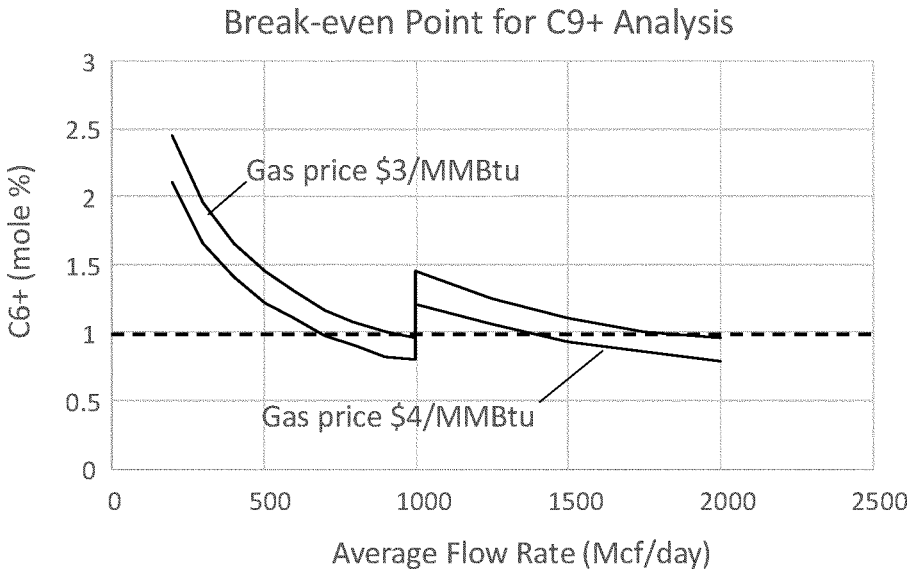

Based on this analysis, the BLM believes that a threshold of 1 mole percent C_6+ would exceed the break-even point, where the cost of performing a C_9+ equals the potential for lost royalty if only a C_6+ analysis was conducted. Therefore, the BLM concludes that this threshold would reduce burden to industry, as compared to the 0.5 mole percent threshold in the existing rule, while still providing the public and Indian tribes and allottees with a fair return. The BLM requests comment on these data and the changes proposed based on the BLM's review of the data.

3175.120 Gas Analysis Report Requirements

Proposed § 3175.120(a)(6) would insert the phrase ''if applicable'' to the requirement that the gas analysis report include the name of the laboratory where the analysis was performed. The BLM is proposing this change because gas analysis reports from portable GCs are not run in a laboratory; therefore, this requirement would not be applicable to them.

Proposed § 3175.120(a)(18) would remove the requirement that the gas analysis report must show the un-normalized mole percent for each component analyzed and instead only require the sum of the un-normalized mole percents from all analyzed components. The un-normalized mole percents represent the raw output of the GC and rarely add up to exactly 100 percent, due to uncertainties inherent to the GC. As a quality control measure, both the existing and proposed regulations require the total un-normalized percent to be within 97 percent to 103 percent. A total un-normalized mole percent outside of this range could indicate problems with a GC, such as a leak, a bad column, or that the GC is out of calibration. The BLM is proposing to remove the requirement for gas analysis reports to include the un-normalized mole percent of each component because the BLM does not use this information and collecting it is an unnecessary burden on operators.

Proposed § 3175.120(d) would clarify the reference for AGA Report No. 8 by specifying the parts containing the calculation method for base supercompressibility. This creates no additional burden or change from the current regulation. Proposed § 3175.120(f) would remove the double reference to the ability to request a variance to remove the GARVS requirement. This change is made to clarify the language.

3175.125 Calculation of Heating Value and Volume

Existing § 3175.125 defines the minimum requirements for the calculation of heating value and volume. The proposed rule would clarify the requirement for averaging the heating value between two royalty measurement points. Under proposed § 3175.125(b)(1), the existing requirement for calculating and reporting an average heating value

would only apply if a lease, unit PA, or CA has more than one FMP that doesn't yet have an FMP number. Once the BLM assigns FMP numbers, each FMP will report as individual line items on the OGOR, negating the need to average heating values when there are multiple FMPs. Under the existing regulation, if there is more than one FMP the average heating value is required in all circumstances. The BLM proposes this change to reduce unnecessary reporting burdens on industry by removing the requirement to report the average heating value for a lease, unit PA, or CA once the BLM assigns individual FMP numbers.

3175.126 Reporting of Heating Value and Volume

Existing § 3175.126 contains the reporting requirements for heating value and volume. The proposed rule would modify this language to clarify those requirements and expand on the requirements for devices used to measure water vapor. Under existing § 3175.126(a)(1), the reported heating value must be ''dry,'' unless the water vapor content is determined through actual measurement and reported on the gas-analysis report. However, the existing regulation does not explicitly state that the water vapor content must be included in the heating-value calculation. The proposed rule would insert the requirement for the measured water vapor content to be included in the heating value calculations. While not a change from existing requirements, the additional language would reduce operator confusion over the requirements of heating-value determination and reporting when water-vapor content has been measured.

Existing § 3175.126(a)(1)(i) lists chilled mirrors as an approved method of measuring water vapor. Under the proposed rule, the BLM would have to approve chilled mirrors by make and model and would place them on the list of approved equipment and methods at *www.blm.gov.* The BLM is proposing to add this requirement because there are numerous models of chilled mirrors on the market and the BLM has no assurance of how accurate these devices are or what operating limitations may apply to them. This requirement would specifically apply to manually operated chilled mirrors. Under proposed § 3175.126(a)(1)(ii), the BLM would apply the same requirements to automated chilled mirrors, for the same reasons.

Existing § 3175.126(a)(1)(ii) lists laser detectors as an approved method of measuring water vapor. Under the proposed rule, laser detectors would no longer be an approved method, but operators could submit individual laser detector makes and models to the BLM for review and approval under revised § 3175.126(a)(1)(iii). The BLM is proposing this change based on concerns that these devices may have certain operating limits that the PMT should review (see the discussion of § 3175.40(h) earlier).

Proposed § 3175.126(a)(1)(iii) would clarify that only those devices that are placed on the BLM's list of approved equipment can be used in the measurement of water vapor. The existing regulation only states that other devices would have to be approved by the BLM.

Proposed § 3175.126(a)(3) would change ''hexane+'' to ''hexane-plus'' for consistent wording with the rest of the regulation. Under existing § 3175.126(a)(3)(i), the BLM defines the required composition of hexanes-plus (60 percent hexanes, 30 percent heptanes, and 10 percent octanes). Under the proposed rule, the BLM would define the minimum heating value of hexanes-plus as 5,129 Btu/scf, which is equivalent to the heating value of the C_6+ composition required in the existing rule. This change would allow flexibility for operators who may have contracts that specify a different composition for C_6+. Under the proposed rule, the operator could use whatever assumed composition of C_6+ they want to use, as long as the equivalent heating value of that composition is at least 5,129 Btu/scf.

The BLM also proposes that in lieu of using the minimum heating value for hexanes-plus required in proposed § 3175.126(a)(3)(i), an operator may use the actual heating value of hexanes, heptanes, and octanes from the C_9+ composition as determined under § 3175.119(c). Because these would be measured values of C_6+, they would represent a more accurate heating value of the gas than an assumption of heating value under § 3175.126(a)(3)(i). It would also allow the voluntary use of C_9+ composition analysis for increased measurement accuracy on FMPs that have 1 mole percent or less of C_6+.

The BLM proposes to add a new paragraph § 3175.126(a)(4) to define the minimum heating value of C_9+. Under the existing regulation, no minimum heating value or specific composition is defined for C_9+. Under the proposed rule, the BLM would define the minimum heating value of C_9+ as 6,996 Btu/scf to remove any confusion on the acceptable heating value of C_9+. Defining a minimum heating value instead of a specific composition would give operators flexibility in the composition they choose, as long as that composition has a heating value of at least 6,996 Btu/scf.

3175.130 GSAMP Requirements

In addition to adding a definition for gas-storage agreement measurement points (GSAMP) in § 3175.10, the BLM would also include requirements for these meters in proposed § 3175.130.

Paragraph 3175.130(a) would re-define the flow categories specifically for GSAMPs.

Of the 35 gas-storage agreements currently in effect on Federal land, 28 of them pay the BLM a fee that is based on the volume of gas either injected into or withdrawn from the gas-storage reservoir. The withdrawal fee tends to be substantially higher than the injection fee, so this analysis is based only on the withdrawal fees, which are shown in the following figure. Each marker on the graph represents a GSA, with the round markers representing GSAs that are operating under a re-negotiated contract as of September 6, 2018, and the triangle markers represent GSAs that are operating (or have operated and are now terminated) under the original contract fees. Gas storage agreements where the withdrawal fee is not based on the volume withdrawn are not shown on the graph.

The BLM believes that GSAs with re-negotiated contracts represent a better and more up-to-date representation of withdrawal fees. Also, because most fees are subject to re-negotiation based on inflation, the higher fees are more representative of future prices than are the lower fees. Based on these assumptions, the BLM believes that a fair average value for withdrawal fees is $0.020/Mcf.

To compare withdrawal fees to royalty value, the withdrawal fee must be converted to an MMBtu basis. Because withdrawn gas typically has a heating value of around 1 MMBtu/Mcf, the heating value equivalent price is the same as the price per Mcf, or $0.020/MMBtu. Dividing the typical royalty value of gas ($0.474/MMBtu) by $0.020/MMBtu yields a ratio of 23.7. In other words, on an economic basis, an MMBtu of gas produced from a lease well is worth at least 23.7 times as much as an MMBtu of gas injected into or withdrawn from a gas-storage agreement. Therefore, the BLM concludes that an equivalent threshold between low- and very-low-volume meters for GSAMPs would be 23.7 times greater than 35 Mcf/day, which is 830 Mcf/day. The BLM would round this value to 800 Mcf/day as the new threshold between low- and very-low-volume GSAMPs. The equivalent

threshold between a low- and high-volume FMP would be 4,700 Mcf/day using the same methodology. The following graph collects data from GSA reports from the BLM's system of Federal land records (LR2000) as of November 14, 2007, and with updated fee information as of September 6, 2018; the information was compiled and placed in the graph by BLM petroleum engineer Rich Estabrook (retired).

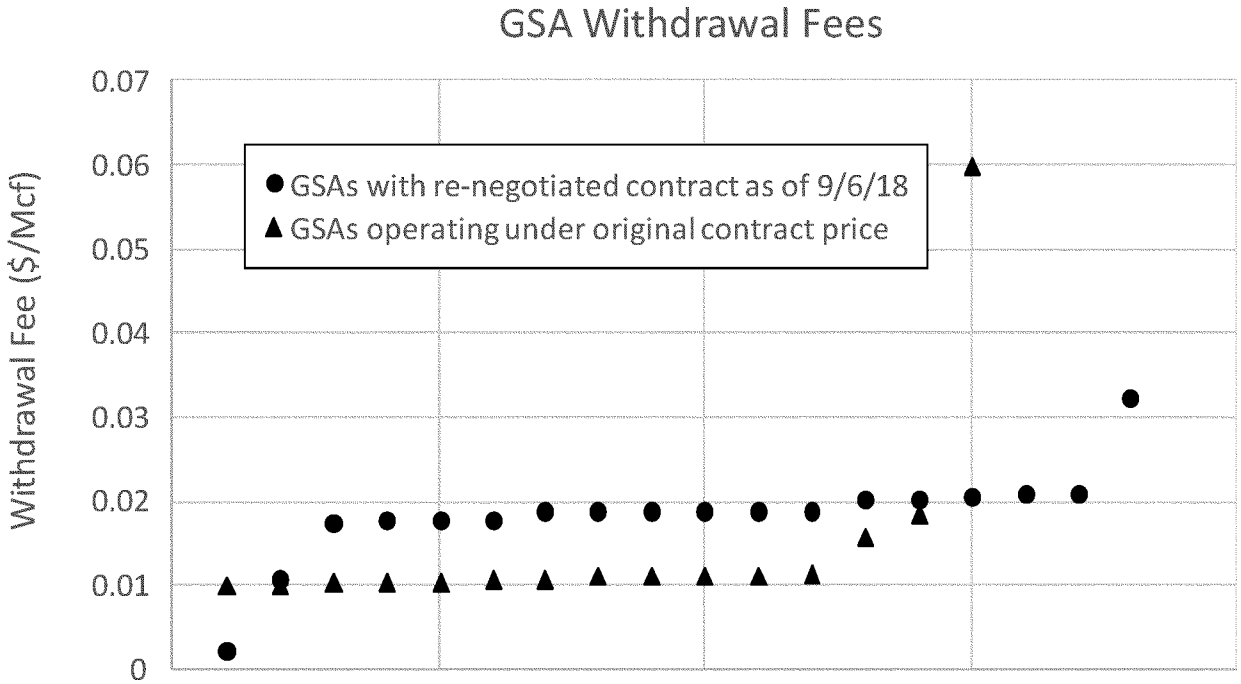

Proposed § 3175.130(b) would exempt GSAMPs from the gas-sampling, analysis, and heating-value reporting requirements of § 3175.80(p), § 3175.110, § 3175.120, § 3175.121, § 3175.125(a) and (b), and § 3175.126. The purpose of taking and analyzing gas samples at an FMP is to determine three parameters: Heating value, which is a direct multiplier in the determination of royalty; relative density, which affects the volume calculation to some degree; and gas composition, which is used to determine compressibility and also affects the volume calculation, although to a much lesser degree. Most gas-storage sites are depleted oil and gas reservoirs with little to no recoverable oil or gas left in them. The gas that is stored in these reservoirs is typically transmission-quality gas that consists primarily of methane. Because the composition of the gas that is injected into or withdrawn from a gas-storage reservoir stays fairly constant over the life of the operation, the heating value and relative density also remain fairly constant. In addition, injection and withdrawal fees are only based on volume; therefore, heating value is not used in the calculation of fees. The slight changes in relative density and compressibility would have little impact on the volume calculation. The BLM does not believe that gas sampling, analysis, and reporting on the withdrawn gas has any public benefit in these cases.

There are some gas-storage reservoirs where the gas withdrawn from the reservoir has a higher heating value than the gas injected into the reservoir. The enrichment of the gas is due to the production of royalty-bearing native oil and gas that still exists in the reservoir. The only way to determine how much native gas was produced is to compare the heating value of the gas injected with the heating value of the gas withdrawn. In addition, the heating value of the withdrawn gas may no longer be as consistent from month to month, due to the addition of native gas production. However, royalty is due on native oil and gas that is withdrawn from the GSA, therefore the meter measuring the withdrawal would be an FMP. The definition of GSAMP clarifies that if the meter measures both gas from a GSA and native gas, it is an FMP. As an FMP, the meter would have to comply with all sections of subpart 3175, including the sections pertaining to gas sampling, gas analysis, and the reporting of heating value. The BLM is specifically seeking comments on this proposed GSAMP language.

Existing § 3175.130 pertains to a testing procedure for transducers. The proposed rule would remove this provision and, instead, place it on the website for the PMT. There are two reasons for this proposed change. First, the BLM wants consistency between the oil measurement rule (subpart 3174) and this rule. The oil measurement rule does not include testing procedures because they will be included on the PMT section of the *www.blm.gov* website. The BLM also decided that providing the testing procedures on the website would provide more flexibility if certain aspects of the procedures need to be modified based on experience and input from operators and manufacturers applying for BLM approval of their devices or procedures. As explained in the discussion of the proposed oil measurement rule earlier, the BLM recognizes that there is a tradeoff between flexibility and public participation in this approach to testing procedures. The BLM seeks comment on the merits of providing the test procedures for oil and gas measurement via the PMT website rather than codifying them in subparts 3174 and 3175, respectively. The BLM also seeks comment on whether the test procedures would benefit from development in a notice-and-comment rulemaking or some other method that would afford greater public participation.

3175.140 Temporary Measurement

The BLM is proposing to add a new section under § 3175.140 to address temporary measurement. Temporary measurement is defined in 43 CFR 3170.10 as a meter that is in place for less than 3 months. Temporary measurement typically applies to a gas meter that is part of a measurement skid used to measure the oil and gas from a newly drilled well before the permanent measurement facility is installed. The existing rule does not address temporary measurement.

Under proposed § 3175.140, a temporary gas meter would have to meet all the requirements of an FMP except for the routine verifications required for mechanical recorders and EGM systems, basic meter-tube inspections, and detailed meter-tube inspections. The reason temporary meters would be exempt from these requirements is because a temporary meter is limited to 3 months of operation and the verifications and meter-tube inspections listed earlier would be done at intervals of 3 months or greater under the proposed rule.

Section 3175.140 in the existing rule pertains to a testing procedure for flow-computer software. The proposed rule would remove this provision and, instead, place it on the website for the PMT. There are two reasons for this proposed change. First, the BLM wants consistency between the oil-measurement rule (subpart 3174) and this rule. The oil-measurement rule does not include testing procedures because they will be included on the PMT website. The BLM also decided that providing the testing procedures on the website would provide more flexibility if certain aspects of the procedures need to be modified based on experience and input from operators and manufacturers applying for BLM approval of their devices or procedures. As discussed earlier, the BLM is seeking comment on this approach to testing procedures.

3175.150 Immediate Assessments

The proposed rule would remove two of the 10 immediate assessments, both related to mechanical recorders. The first is for failure to conduct a mechanical recorder verification after installation or following repair as required under § 3175.92(a), and the second is for failure to conduct a routine mechanical recorder verification as required under § 3175.92(b). The BLM is proposing to remove these immediate assessments because mechanical recorders are becoming less prevalent and are typically only found on very-low-volume FMPs where the risk of royalty loss is minimal.

Appendix B to 3175—Time Between Samples

Appendix B of the proposed rule would contain a new table defining the maximum allowable time in days between required orifice-plate inspections, mechanical recorder and EGM system verifications, and spot sampling frequencies. The existing rule establishes the required monthly frequency for each of these activities, but there has been some confusion as to how this should be interpreted. For example, routine mechanical recorder verifications for a low-volume FMP must occur every 3 months according to existing Table 1 to § 3175.90. This frequency would suggest that if a verification was performed on January 1st, the next verification could occur as late as April 30th. This would result in 4 months between verifications instead of the intended 3 months. The same issue applies to verifications for EGM systems and routine orifice-plate inspection frequencies. To address this confusion for spot sampling frequency, the BLM included existing Table 1 to § 3175.115, which establishes the maximum time between samples for a given monthly frequency. For example, under Table 1 to § 3175.115, for a required 3-month spot sampling frequency, no two consecutive spot samples can be more than 105 days apart. The BLM added this to the existing rule to accommodate unforeseen circumstances such as adverse weather, equipment breakdowns, or scheduling issues that would give operators some flexibility if they could not sample at the required 3-month mark. Although the same issue applies to routine orifice-plate inspections, mechanical recorder verification, and EGM system verifications, the existing regulation does not include tables similar to Table 1 to § 3175.115 for these activities. To address this issue, the BLM proposes to move Table 1 to § 3175.115 to a new Appendix B and then reference Appendix B in the sections covering routine orifice-plate inspections, mechanical recorder verifications, EGM system verifications, and spot sampling.

C. Summary of Estimated Impacts

The BLM reviewed the proposed rule and conducted an RIA and Environmental Assessment (EA) that examine the impacts of the proposed requirements. The draft RIA and draft EA have been posted in the docket for the proposed rule on the Federal eRulemaking Portal: *https://www.regulations.gov.* In the Searchbox, enter ''RIN 1004–AE59'', click the ''Search'' button, open the Docket Folder, and look under Supporting Documents.

The BLM's 2019 proposed rule would reduce costs for both Federal and Indian onshore oil and gas operators and the BLM. The net present value of the estimated cost savings over a 10-year period is $112 million (using a discount rate of 7 percent) or $132 million (using a discount rate of 3 percent). This equates to annual costs savings of about $16 million per year (annualized over the evaluation period). These cost savings are in 2019 dollars.

In nominal terms, the proposed rule would generate a cost savings to the oil and gas industry and the Federal government averaging $23.1 million in each of the first 3 years, followed by $11.7 million per year in cost savings thereafter. Of these amounts, 88 percent of the cost savings in first 3 years would accrue to the industry, and 96 percent of the costs savings in year four and beyond would accrue to the industry.

The proposed rule would remove or relax a number of requirements for equipment, testing, installation, and recordkeeping at existing and operations. These actions would reduce the cost of regulatory compliance for oil and gas operators producing from leases on Federal and Indian mineral estate compared to what it would cost them to comply with the 2016 Final Rules. Some provisions of the 2019 proposed rule would increase compliance costs for industry and the BLM, but are more than offset by the effect of other provisions that would decrease compliance costs.

The largest cost reduction from a single provision in the proposed rule would come from an estimated $8.6 million reduction in non-hourly installation costs and hourly recordkeeping costs for oil and gas operators from less stringent requirements under 43 CFR 3173.72 and 3173.90 for receiving CAA and offlease measurement approval, and less burdensome requirements to apply for such approval. Operators would also save an estimated $3.4 million in compliance costs and the BLM would save an estimated $2.1 million in administrative costs from proposed changes to 43 CFR 3173.61. This section would no longer require that oil and gas FMP application Sundry Notices include a description of the facility's primary element (meter tube), secondary element, LACT/CMS meter, tank number(s), and wells or facilities using the FMP. The BLM estimates that this change to 43 CFR 3173.61(b)(2) would

reduce industry recordkeeping time from 1 to 2 hours across-the-board, would reduce BLM recordkeeping time from 1.5 hours to 45 minutes for Sundry Notices and other documents submitted with FMP applications for existing facilities, and from 1 hour to 30 minutes of BLM time annually for FMP applications for new and modified facilities.

There are also multiple cost-reducing provisions in 43 CFR subpart 3175 that would also have a significant combined effect. The proposed revisions to subpart 3175 would reduce total industry compliance costs by $8.9 million per year for the first 3 years following its enactment, and $5.5 million each year after that. The savings for industry would include significant changes from the following provisions:

Category 1. Increased Gas Sampling Frequency

Lower one-time, non-hourly installation costs under 43 CFR 3175(b)(2) for very-high-volume (VHV) gas FMPs, which would no longer have to install GC meters if they are unable to achieve a minimum variance (uncertainty level) of their gas samples' heating values (measured in Btu per Mcf) ($3.1 million in annualized one-time savings over 3 years);

Category 8. Orifice-Plate and Meter-Tube Inspections

Reducing the frequency of basic and detailed metering-tube inspections required for low-volume (LV) FMPs under § 3175.80(j) and § 3175.80(k)(3) from once every 5 years to once every 10 years, as well as from once every 2 years to once every 5 years for high-volume (HV) FMPs, and from once every year to once every 5 years for VHV FMPs ($2.1 million saved per year);

Category 2. Sampling Requirements

Removing annual spot-sampling requirements for very-low volume (VLV) and LV FMPs that are actually GSAMPs under § 3175.130(b) and for any HV and VHV FMPs under 3175.113(a)(1) where no current production is taking place ($1.3 million saved per year from these and related provisions);

Category 5. Calibration Frequency

Reducing from 3 months to 6 months the frequency with which HV and VHV FMPs must conduct routine EGM system verifications under § 3175.102(b) ($1.1 million saved per year);

Category 14. EGM Requirements for Logs and Calculations

Removing under § 3175.104(a)(2) the requirement that HV and VHV FMPs replace QTR devices that display fewer than five decimal places ($0.5 million in annual one-time savings for years 1–3); and,

Category 4. Type Testing

Grandfathering, under § 3175.50(a), all transducers, flow computer software versions, isolating flow conditioners, differential primary devices, and linear measurement devices (Coriolis and ultrasonic meters) at VLV, LV, and HV FMPs from type testing for PMT approval of makes and models not listed on *www.blm.gov* ($0.4 million in annual one-time savings for years 1–3).

While changes in 43 CFR subpart 3174 would have the impact of increasing compliance costs, they would be more than offset by the cost reductions from proposed changes to 43 CFR subparts 3173 and 3175 described earlier. Nearly all of the increased compliance costs under 43 CFR subpart 3174 would come from type testing and data submission to the PMT of new equipment and software makes and models grouped under *43 CFR 3174.170—Oil measurement by other methods*. These would include electronic thermometer (§ 3174.43(a)(2), and § 3174.90(e)), temperature averaging device (§ 3174.105), pressure averaging device (§ 3174.106(a)), flow computer software (§ 3174.120(a)), and measurement data system (§ 3174.121(a)) makes and models not currently listed on *www.blm.gov.*

VII. Procedural Matters

Regulatory Planning and Review (E.O. 12866, E.O. 13563)

Executive Order 12866 provides that the Office of Information and Regulatory Affairs (OIRA) within the Office of Management and Budget (OMB) will review all significant rules. The OIRA has determined that this proposed rule is significant because it would raise novel legal or policy issues.

Executive Order 13563 reaffirms the principles of Executive Order 12866 while calling for improvements in the Nation's regulatory system to promote predictability, to reduce uncertainty, and to use the best, most innovative, and least burdensome tools for achieving regulatory ends. The Executive Order directs agencies to consider regulatory approaches that reduce burdens and maintain flexibility and freedom of choice for the public where these approaches are relevant, feasible, and consistent with regulatory objectives. Executive Order 13563 emphasizes further that regulations must be based on the best available science and that the rulemaking process must allow for public participation and an open exchange of ideas. We have developed this rule in a manner consistent with these requirements.

This proposed rule would revise portions of the BLM's 2016 Final Rules. We have developed this proposed rule in a manner consistent with the requirements in Executive Order 12866 and Executive Order 13563.

The BLM reviewed the requirements of the proposed rule and determined that it will not adversely affect in a material way the economy, a sector of the economy, productivity, competition, jobs, the environment, public health or safety, or State, local, or tribal governments or communities. For more detailed information, see the RIA prepared for this proposed rule. The RIA has been posted in the docket for the proposed rule on the Federal eRulemaking Portal: *https://www.regulations.gov.* In the Searchbox, enter ''RIN 1004–AE59'', click the ''Search'' button, open the Docket Folder, and look under Supporting Documents.

Reducing Regulation and Controlling Regulatory Costs (E.O. 13771)

This rule would be a deregulatory action under Section 3(a) E.O. 13771.

Regulatory Flexibility Act

The Regulatory Flexibility Act (5 U.S.C. 601 *et seq.*) (RFA) requires that Federal agencies prepare a regulatory flexibility analysis for rules subject to the notice-and-comment rulemaking requirements under the Administrative Procedure Act (5 U.S.C. 500 *et seq.*), if the rule would have a significant economic impact, whether detrimental or beneficial, on a substantial number of small entities. See 5 U.S.C. 601–612. Congress enacted the RFA to ensure that government regulations do not unnecessarily or disproportionately burden small entities. Small entities include small businesses, small governmental jurisdictions, and small not-for-profit enterprises.

The BLM reviewed the SBA size standards for small businesses and the number of entities fitting those size standards as reported by the U.S. Census Bureau in the Economic Census. The BLM concludes that the vast majority of entities operating in the relevant sectors are small businesses as defined by the SBA. As such, the proposed rule would likely affect a substantial number of small entities.

The BLM reviewed the proposed rule and estimates that it would generate cost savings for industry of $20.3 million per year for each of the first 3 years following enactment, followed by

$11.2 million per year after that. For each of the estimated 4,600 oil and gas entities operating on Federal and Indian onshore mineral leases, these savings would average $4,415 per entity per year for each of the first 3 years following enactment, followed by ongoing net savings of $2,425 per entity per year beginning in year 4. These estimated cost savings would provide relief to small operators which, the BLM notes, represent the overwhelming majority of operators of Federal and Indian leases.

For the purpose of carrying out its review pursuant to the RFA, the BLM believes that the proposed rule would not have a ''significant economic impact on a substantial number of small entities,'' as that phrase is used in 5 U.S.C. 605. An initial regulatory flexibility analysis is therefore not required. In making a ''significant'' determination under the RFA, the BLM used an estimated per-entity cost savings to conduct a screening analysis. The analysis shows that the average reduction in compliance costs associated with this proposed rule are a small enough percentage of the profit margin for small entities, so as not be considered ''significant'' under the RFA. Details on this determination can be found in the RIA for the proposed rule. For the foregoing reasons, and those mentioned in the RIA at Section 2.9 Affected Small Entities, the Secretary of Interior certifies under 5 U.S.C. 605 (b), that this rule will not have a significant economic impact on a substantial number of small entities.

Small Business Regulatory Enforcement Fairness Act

This proposed rule is not a major rule under 5 U.S.C. 804(2), the Small Business Regulatory Enforcement Fairness Act. This proposed rule:

(a) Would not have an annual effect on the economy of $100 million or more.

(b) Would not cause a major increase in costs or prices for consumers, individual industries, Federal, State, or local government agencies, or geographic regions.

(c) Would not have a significant adverse effects on competition, employment, investment, productivity, innovation, or the ability of U.S.-based enterprises to compete with foreign-based enterprises.

Unfunded Mandates Reform Act (UMRA)

This proposed rule would not impose an unfunded mandate on State, local, or tribal governments, or the private sector of $100 million or more per year. The proposed rule would not have a significant or unique effect on State, local, or tribal governments or the private sector. The proposed rule contains no requirements that would apply to State, local, or tribal governments. It would revise requirements that would otherwise apply to the private sector. A statement containing the information required by the Unfunded Mandates Reform Act (UMRA) (2 U.S.C. 1531 *et seq.*) is not required for the proposed rule. This proposed rule is also not subject to the requirements of section 203 of UMRA because it contains no regulatory requirements that might significantly or uniquely affect small governments, because it contains no requirements that apply to such governments, nor does it impose obligations upon them.

Governmental Actions and Interference With Constitutionally Protected Property Right—Takings (Executive Order 12630)

This proposed rule would not effect a taking of private property or otherwise have taking implications under Executive Order 12630. A takings implication assessment is not required. The proposed rule would revise many of the requirements placed on operators by the 2016 Final Rules. Operators would not have to undertake certain compliance activities, either operational or administrative, associated with those rules. Therefore, the proposed rule would impact some operational and administrative requirements on Federal and Indian lands. All such operations are subject to lease terms which expressly require that subsequent lease activities be conducted in compliance with subsequently adopted Federal laws and regulations.

This proposed rule conforms to the terms of those leases and applicable statutes and, as such, the rule is not a government action capable of interfering with constitutionally protected property rights. Therefore, the BLM has determined that the rule would not cause a taking of private property or require further discussion of takings implications under Executive Order 12630.

Federalism (Executive Order 13132)

Under the criteria in section 1 of Executive Order 13132, this proposed rule does not have sufficient federalism implications to warrant the preparation of a federalism summary impact statement. A federalism impact statement is not required.

The proposed rule would not have a substantial direct effect on the States, on the relationship between the Federal Government and the States, or on the distribution of power and responsibilities among the levels of government. It would not apply to States or local governments or State or local governmental entities. The rule would affect the relationship between operators, lessees, and the BLM, but it does not directly impact the States. Therefore, in accordance with Executive Order 13132, the BLM has determined that this proposed rule does not have sufficient federalism implications to warrant preparation of a Federalism Assessment.

Civil Justice Reform (Executive Order 12988)

This proposed rule complies with the requirements of Executive Order 12988. More specifically, this proposed rule meets the criteria of section 3(a), which requires agencies to review all regulations to eliminate errors and ambiguity and to write all regulations to minimize litigation. This proposed rule also meets the criteria of section 3(b)(2), which requires agencies to write all regulations in clear language with clear legal standards.

Consultation and Coordination With Indian Tribal Governments (Executive Order 13175 and Departmental Policy)

The Department strives to strengthen its government-to-government relationship with Indian tribes through a commitment to consultation with Indian tribes and recognition of their right to self-governance and tribal sovereignty.

The BLM evaluated this proposed rule under the Department's consultation policy and under the criteria in Executive Order 13175 to identify possible effects of the rule on federally recognized Indian tribes. Since the BLM approves proposed operations on all Indian (except Osage Tribe) onshore oil and gas leases, the proposed rule has the potential to affect Indian tribes.

In March 2019, the BLM sent a letter to each registered tribe informing them of a public rulemaking for parts 3170. The letter offered tribes the opportunity for individual government-to-government consultation for the new rule. Subsequent to the letter, each BLM Deputy State Director for Energy, Minerals and Realty received a presentation summarizing the proposed changes to the current rules to share with the tribes. To date, three tribes have expressed interest in formal consultation upon publication of this proposed rule. Future tribal consultation may occur on an ongoing basis.

Paperwork Reduction Act

1. Overview

This proposed rule contains existing, revised, and new information collection (IC) activities for BLM regulations, and a submission to the OMB for review under the Paperwork Reduction Act of 1995 (PRA) (44 U.S.C. *et seq.).* All information collections require approval under the PRA. We may not conduct, or sponsor, and you are not required to respond to a collection of information unless it displays a currently valid OMB control number. The OMB has reviewed and approved the information collection requirements associated with this rulemaking and assigned the following OMB control numbers. The proposed rule would affect the following control numbers:

- Onshore Oil and Gas Operations and Production (1004–0137, expiration October 31, 2021);
- Oil and Gas Facility Site Security (1004–0207, expiration May 31, 2023);
- Measurement of Oil (1004–0209, expiration April 30, 2023); and
- Measurement of Gas (1004–0210, expiration April 30, 2023).

Please note that this section includes estimated hour and non-hour cost burdens associated with IC activities for OMB control numbers 1004–0137, 1004–0207, 1004–0209, and 1004–0210 that are not addressed in this proposed rule. Therefore, the total burden estimates described herein exceed the estimated burdens associated with the regulatory provisions directly impacted by this proposed rule. For the existing requirements unchanged by the proposed rule, we used the existing OMB-approved estimated hour and non-hour cost burdens.

The BLM is seeking to renew the information collections for 3 years with the final rulemaking. The following description of the IC activities in this proposed rule includes estimates of annual burdens. Included in the burden estimates are the time for reviewing instructions, searching existing data sources, gathering and maintaining the data needed, and completing and reviewing each component of the proposed information collection.

2. Summary of Information Collection Activities

PROPOSED RULE CHANGES IN RESPONSES AND BURDENS

OMB control No.	Existing OMB approved responses and burdens		Proposed rule responses and burdens		Changes in responses and burdens	
	Number of responses	Number of burden hours	Number of responses	Number of burden hours	Change in responses	Change in burden hours
1004–0137	301,663	1,835,888	222,919	1,772,543	(78,744)	(63,345)
1004–0207	93,975	69,640	89,045	59,740	(4,930)	(9,900)
1004–0209	11,742	5,884	1,382	5,166	(10,360)	(718)
1004–0210	430,782	95,068	246,726	66,507	(184,056)	(28,561)
Total	838,162	2,006,480	560,072	1,903,959	(278,090)	(102,524)

PROPOSED RULE CHANGES IN NONHOUR COST BURDENS

OMB control No.	Existing OMB approved nonhour cost burdens	Proposed rule nonhour cost burdens	Changes in nonhour cost burdens
1004–0137	$29,370,000	$29,370,000	0
1004–0207	0	0	0
1004–0209	5,580,305	4,070,305	($1,510,000)
1004–0210	24,600,894	10,996,945	(13,603,949)
Total	59,551,199	44,437,250	(15,113,949)

Control Number 1004–0137

Abstract: Various Federal and Indian mineral leasing statutes authorize the BLM to grant and manage onshore oil and gas leases on Federal and Indian (except Osage Tribe) lands. In order to fulfill its responsibilities under these statutes, the BLM needs to perform the information collection activities set forth in the regulations at 43 CFR parts 3160 and 3170.

Title of Collection: Onshore Oil and Gas Operations (43 CFR part 3160 and 3170).

OMB Control Number: 1004–0137.

Form Numbers: 3160–3, 3160–4, 3160–5, and 3160–6.

Type of Review: Revision of a currently approved collection.

Respondents/Affected Public: Holders of onshore oil and gas leases on Federal and Indian (except Osage Tribe) lands, and applicants for such leases.

Total Estimated Number of Annual Responses: 222,919.

Estimated Completion Time per Response: Varies from 15 minutes to 40 hours, depending on activity.

Total Estimated Number of Annual Burden Hours: 1,772,543 hours.

Respondent's Obligation: Required to obtain or retain a benefit.

Frequency of Collection: On occasion, except for the following IC activities:

- Request for Approval of a Communitization Allocation Agreement (CAA), which must be submitted once;
- Response to Notice of Insufficient CAA, which must be submitted once;
- Request for Approval of a Facility Measurement Point (FMP) for Future Measurement Facilities, which must be submitted once;
- Request for Approval of an FMP for Existing Measurement Facilities, which must be submitted once; and
- Measurement Tickets, which must be submitted monthly.

Total Estimated Annual Nonhour Burden Cost: $29.37 million.

The current OMB inventory includes 1,835,888 annual burden hours for the related collection of information. We expect the burden estimate for the proposed rule will be 1,772,543 hours, which reflects a decrease of 78,744 responses and 63,345 hour burdens. The program changes for control number consist of IC activities moved from OMB Control Number 1004–0207 and 1004–0209, and for the large decrease in the measurement tickets burdens. The

proposed rule will not change the nonhour cost burden for this control number.

From approved annual burden hours under 1004–0137, the rule proposes changes to the following burdens:

• Measurement Tickets (upon request), 43 CFR 3174.43(b)(6) and 3174.162, (−67,000 burden hours).

The proposed rule adds the following burden hours:

• Request to Use Alternate Measurement System (One-Time), 43 CFR 3170.30, (+400 burden hours),

• Request to Use Alternate Measurement System (Annual), 43 CFR 3170.30, (+80 burden hours),

• Documentation of Early Adoption of 3174—foregoing phase-in periods (Annual), 43 CFR 3174.43(a)(1) and 3174.60(b)(3), (+500 burden hours),

• Documentation of Tank Calibration Table Strapping (Annual), 43 CFR 3174.43(a)(2) and 3174.82(d), (+2,500 burden hours),

• Notification of LACT System Failure, 43 CFR 3174.90, (+25 burden hours),

• Documentation of Excessive Meter Factor Deviation (Annual), 43 CFR 3174.43(a)(4) and 3174.154(a), (+100 burden hours), and

• Approval for Slop or Waste Oil (Annual), 43 CFR 3174.14, (−50 burden hours).

Control Number 1004–0207

Abstract: This collection of information enables the BLM to enforce security standards for Federal and Indian (except Osage Tribe) oil and gas leases.

Title of Collection: Oil and Gas Facility Site Security (43 CFR subparts 3170 and 3173).

OMB Control Number: 1004–0207.

Form Number: None.

Type of Review: Revision of a currently approved collection.

Respondents/Affected Public: Oil and gas operators, lessees, operators, purchasers, transporters, and any other person directly involved in producing, transporting, purchasing, selling, or measuring oil or gas.

Total Estimated Number of Annual Responses: 89,045.

Estimated Completion Time per Response: Varies from 15 minutes to 5 hours, depending on activity.

Total Estimated Number of Annual Burden Hours: 59,740.

Respondent's Obligation: Required to obtain or retain a benefit.

Frequency of Collection: On occasion.

Total Estimated Annual Nonhour Burden Cost: None.

The current OMB inventory includes 69,640 annual burden hours for the related collection of information. We expect the burden estimate for the proposed rule will be 59,740 hours, which reflects a decrease of 4,930 responses and 9,900 annual burden hours.

From approved annual burden hours under 1004–0207, the rule proposes changes to the following:

• Proposed § 3173.31 would revise and replace two IC activities previously approved for § 3173.6 (''Water Draining Operations —Data Collection'' and ''Water Draining Operations—Recordkeeping and Records Submission). The proposed rule would replace these two IC activities with a single IC activity, *i.e.,* ''Water-Draining Operations.'' The estimated responses decrease by 5,000 (from 65,000 for the two existing IC activities to 60,000 for the one proposed activity). The estimated burden hours decrease by 10,000 (from 25,000 for the two existing IC activities to 15,000 for the one proposed), and

• The proposed rule includes one program change. From approved annual burden hours under 1004–0207, the rule proposes changes to the Report of Theft or Mishandling of Production (43 CFR 3173.40) (+100 annual burden hours). The estimated responses increase by 70 (from 5 for the existing IC activity to 75 for the proposed activity). The estimated burden hours increase by 100 (from 50 for the existing IC activity to 150 for the proposed activity).

There are no effects on estimated non-hour burdens.

Control Number 1004–0209

Abstract: This collection of information enables the BLM to enforce standards for the measurement of oil produced from Federal and Indian (except Osage Tribe) leases.

Title of Collection: Measurement of Oil (43 CFR part 3174).

OMB Control Number: 1004–0209.

Form Number: None.

Type of Review: Revision of a currently approved collection.

Respondents/Affected Public: Oil and gas operators.

Total Estimated Number of Annual Responses: 1,382 responses.

Estimated Completion Time per Response: Varies from 15 minutes to 40 hours, depending on activity.

Total Estimated Number of Annual Burden Hours: 5,166.

Respondent's Obligation: Required to obtain or retain a benefit.

Frequency of Collection: On occasion.

Total Estimated Annual Nonhour Burden Cost: $4,070,305.

The current OMB inventory includes 5,884 annual burden hours for the related collection of information. We expect the burden estimate for the proposed rule will be 5,166 hours, which reflects a decrease of 10,360 responses and 718 hour burdens. The current nonhour cost burden is $5,580,305. We expect the nonhour cost burden for the proposed rule to $4,070,305, which reflects a decrease of $1,510,000.

From approved annual burden hours under 1004–0209, the rule proposes removal of the following burdens:

• Documentation of Tank Calibration Table Strapping (Annual), 43 CFR 3174.5(c)(3), (−2,500 burden hours),

• Notification of LACT System Failure, 43 CFR 3174.7(e)(1), (−25 burden hours),

• Documentation of Testing for Approval of a Positive Displacement (PD) Meter (One-Time), 43 CFR 3174.8(a)(1), (−800 burden hours),

• Documentation of Testing for Approval of a Positive Displacement (PD) Meter (Annual), 43 CFR 3174.8(a)(1), (−80 burden hours),

• Onsite Data Display Requirements (Annual), 43 CFR 3174.10(e), (−50 burden hours),

• Meter Prover Calibration Documentation (Annual), 43 CFR 3174.11(b), (−75 burden hours),

• Meter Proving and Volume Adjustments Notification (Annual), 43 CFR 3174.11(i)(1), (−6 burden hours),

• Request to Use Alternate Oil Measurement System (One-Time), 43 CFR 3174.13, (−400 burden hours),

• Request to Use Alternate Oil Measurement System (Annual), 43 CFR 3174.13, (−80 burden hours), and

• Approval for Slop or Waste Oil (Annual), 43 CFR 3174.14, (−50 burden hours)

From approved annual burden hours under 1004–0209, the rule proposes changes to the following burdens:

• Request for Exception to Uncertainty Requirements (One-Time), 43 CFR 3174.31, (−120 burden hours),

• Request for Exception to Uncertainty Requirements (Annual), 43 CFR 3174.31(a)(2), (−40 burden hours),

• Documentation of Testing for Approval of Automatic Tank Gauging (ATG) Equipment (One-Time), 43 CFR 3174.41(a), (−300 burden hours),

• Documentation of Testing for Approval of Automatic Tank Gauging (ATG) Equipment (Annual), 43 CFR 3174.41(a), (−60 burden hours),

• Documentation of Testing for Approval of Coriolis Meter (One-Time), 43 CFR 3174.41(d) and (e), (+200 burden hours),

• Documentation of Testing for Approval of Coriolis Meter (Annual), 43 CFR 3174.41(d) and (e), (+20 burden hours),

• Log of ATG Verification (upon request) (Annual), 43 CFR 3174.88(b)(4) and 43 CFR 3174.43(b)(1), (−1 burden hours),
• Documentation of Coriolis Meter Specifications and Zero Verification Procedure (upon request) (Annual), 43 CFR 3174.110(e) and 43 CFR 3174.43(b)(2), (No change),
• Log of Meter Factors, Zero Verifications, and Zero Adjustments (upon request) (Annual),
• 43 CFR 3174.110(e), (No change),
• ELM Audit Trail Requirements (upon request) (Annual), 43 CFR 3174.130(h)(6) and 43 CFR 3174.43(b)(4), (+375 burden hours), and
• Meter Proving Reports (upon request) (Annual), 43 CFR 3174.158(c) and 43 CFR 3174.43(b)(5), (+94 burden hours).

Proposed rule introduces the following burden hours:
• Documentation of Testing for Approval of LACT Sampling System (One-Time), 43 CFR 3174.41(b), (+1200 burden hours),
• Documentation of Testing for Approval of LACT Sampling System (Annual), 43 CFR 3174.41(b), (+200 burden hours),
• Documentation of Testing for Approval of Stand-alone Temperature Averaging Device (One-Time), 43 CFR 3174.41(f), (+60 burden hours),
• Documentation of Testing for Approval of Stand-alone Temperature Averaging Device (Annual), 43 CFR 3174.41(f) and 43 CFR 3174.105(a), (+20 burden hours),
• Documentation of Testing for Approval of Temperature and Pressure Transducers (One-Time), 43 CFR 3174.41(g) and (h), (+1,000 burden hours),
• Documentation of Testing for Approval of Temperature and Pressure Transducers (Annual), 43 CFR 3174.41(g) and (h), (+100 burden hours),
• Documentation of Testing for Approval of Electronic Liquid Measurement Software (One-Time), 43 CFR 3174.41(i), (+320 burden hours),
• Documentation of Testing for Approval of Electronic Liquid Measurement Software (Annual), 43 CFR 3174.41(i), (+80 burden hours),
• Documentation of Testing for Approval of Portable Electronic Thermometers (One-Time), 43 CFR 3174.41(j), (+60 burden hours),
• Documentation of Testing for Approval of Portable Electronic Thermometers (Annual), 43 CFR 3174.41(j), (+20 burden hours),
• Documentation of Testing for Approval of Measurement Data Systems (One-Time), 43 CFR 3174.41(k), (+80 burden hours), and
• Documentation of Testing for Approval of Measurement Data Systems (Annual), 43 CFR 3174.41(k), (+40 burden hours).

Control Number 1004–0210

Abstract: The information collection activities in this control number assist the BLM in ensuring the accurate measurement and proper reporting of all gas removed or sold from Federal and Indian (except Osage Tribe) leases, units, unit participating areas, and areas subject to communitization agreements, by providing a system for production accountability by operators, lessees, purchasers, and transporters.

Title of Collection: Measurement of Gas (43 CFR subpart 3175).

OMB Control Number: 1004–0210.

Form Number: Equipment Application (New Form).

Type of Review: Revision of a currently approved collection.

Respondents/Affected Public: Holders of Federal and Indian (except Osage Tribe) oil and gas leases, operators, purchasers, transporters, any other person directly involved in producing, transporting, purchasing, or selling, including measuring, oil or gas through the point of royalty measurement or the point of first sale, and manufacturers of equipment or software used in measuring natural gas.

Total Estimated Number of Annual Responses: 246,726.

Estimated Completion Time per Response: Varies from 6 minutes to 80 hours, depending on activity.

Total Estimated Number of Annual Burden Hours: 66,507.

Respondent's Obligation: Required to obtain or retain a benefit.

Frequency of Collection: On occasion, except for information collection activities at 43 CFR 3175.115 and 3175.120, which require submission of gas analysis reports at frequencies that vary from monthly to annually.

Total Estimated Annual Nonhour Burden Cost: $10,996,945.

The current OMB inventory includes 95,068 annual burden hours for the related collection of information. We expect the burden estimate for the proposed rule will be 66,507 annual hour burdens, which reflects a decrease of 184,056 responses and 28,561 hour burdens. The current nonhour cost burdens equals $24,600,894. We expect the nonhour cost burdens for the proposed rule will be $10,996,945, which reflects a decrease of $13,603,949.

From approved annual burden hours under 1004–0210, the rule proposes removal of the following burdens:
• Transducers—Test Data Collection and Submission for Existing Makes and Models (One-Time), 43 CFR 3175.43 and 3175.130, (−1,600 annual burden hours)
• Transducers—Test Data Collection and Submission for Future Makes and Models, (Annual), 43 CFR 3175.43 and 3175.130, (−16 annual burden hours)
• Flow-computer software—Test Data Collection and Submission foe Existing Makes and Models (One-Time), 43 CFR 3175.44 and 3175.140 though 3175.144, (−800 annual burden hours)
• Flow-computer software—Test Data Collection and Submission for Future Makes and Models (Annual), 43 CFR 3175.44 and 3175.140 though 3175.144, (−160 annual burden hours)
• Isolating Flow Conditioners—Test Data Collection and Submission for Existing Makes and Models (One-Time), 43 CFR 3175.46, (−240 annual burden hours)
• Differential Primary Devices Other than Flange-Tapped Orifice Plates—Test Data Collection and Submission for Existing Makes and Models (One-Time), 43 CFR 3175.47, (−240 annual burden hours)
• Linear Measurement Devices—Test Data Collection and Submission for Existing Makes and Models (One-Time), 43 CFR 3175.48, (−400 annual burden hours)
• Linear Measurement Devices—Test Data Collection and Submission for Future Makes and Models (Annual), 43 CFR 3175.48, (−80 annual burden hours)
• Accounting Systems—Test Data Collection and Submission for Future Makes and Models (One-Time), 43 CFR 3175.49, (−1600 annual burden hours)
• Accounting Systems—Test Data Collection and Submission for Future Makes and Models (Annual), 43 CFR 3175.49, (−160 annual burden hours)
• Sample Separator Cleaning—Documentation, 43 CFR 3175.113(c)(3), (−757 annual burden hours)
• Gas Analysis—Composite Sampling (One-Time), 43 CFR 3175.115(b)(5) (−21 annual burden hours)

Proposed rule introduces changes in burden hours for the following:
• Measurement Equipment at FMPs (NEW Form), 43 CFR 3175.40, (+240 hours)
• Schedule of Basic Meter Tube Inspection, 43 CFR 3175.80(k)(4), (−6,278 annual burden hours)
• Basic Inspection Meter Tubes—Data Collection and Submission, 43 CFR

3175.80(k), (−331 annual burden hours)
- Detailed Inspections of Meter Tubes—Data Collection and Submission, 43 CFR 3175.80(l) and (m), (−2,082 annual burden hours)
- Request for Extension of Time for a Detailed Meter Tube Inspection, 43 CFR 3175.80(k)(3), (−528 annual burden hours)
- Documentation of unedited QTR, configuration log, event log, and alarm log, 43 CFR 3175.104(a) through (d), (−3,136) annual burden hours)
- Notification of Schedule for Spot Sampling, 43 CFR 3175.113(b), (+7,486 annual burden hours)
- Sample Cylinder Cleaning—Documentation, 43 CFR 3175.113(c)(3), (−7,273 annual burden hours)
- Gas Analysis—Spot Sampling, 43 CFR 3175.115(a) and (b) and 3175.116, (−778 annual burden hours)
- On-line Gas Chromatograph Specifications, 43 CFR 3175.117(c), (−10 annual burden hours)
- Gas Chromotograph Verification—Documentation, 43 CFR 3715.118(c)(1) and (d), (−1,211 annual burden hours)
- Gas Analysis Report—Entry into GARVS, 43 CFR 3175.119(a) and 3175.120(f), (−8,586 annual burden hours)

The proposed rule will not change the following burden hours:
- Maintenance of Data at FMP, 43 CFR 3175.101(b) through (d)
- Redundancy Verification Check for Electronic Gas Measurement Systems, 43 CFR 3175.102(e)
- Notification of Verification, 43 CFR 3175.92(d) and (e) and 43 CFR 3175.92(f)
- Evacuation and Pre-charge for the Helium Pop Method—Documentation, 43 CFR 3175.114(a)(2)
- O-ring and Lubricant Composition for the Floating Piston Method—Documentation, 43 CFR 3175.114(a)(3)
- Gas Analysis—Extended Gas Analysis, 43 CFR 3175.119(b)

3. Information Collection Request

The proposed rule would remove or revise requirements that the BLM has found to be unnecessarily burdensome, unclear, inconsistent, or otherwise problematic. The proposed rule would also adopt industry standards, where appropriate, and provide for the use of emerging measurement technologies. The following section describes the proposed regulatory changes potentially changing the collection of information burdens in OMB approved control numbers.

Proposed Revision of Control Number 1004–0137

New uses for Form 3160–5 are included at 43 CFR parts 3170, 3173, and 3174 as a result of the proposed rule. The BLM now requests that the new uses and burdens for Form 3160–5 that are described under control number 1004–0207 and 1004–0209 be moved to 1004–0137. The BLM anticipates continuation of the other IC activities as authorized by the OMB Control Numbers 1004–0207, 1004–0209, and 1004–0210.

The following describes proposed revisions of this control number.

Proposed § 3170.30, Alternative measurement equipment and procedures. Proposed § 3170.30 would allow an operator or manufacturer to request approval, with supporting data, for the use of alternate oil and gas measurement equipment or measurement methods. Operators or manufacturers would submit to the BLM performance data, actual field test results, laboratory test data, or any other supporting data or evidence showing the proposed alternate oil or gas measurement equipment or method would meet or exceed the objectives of minimum standards.

Proposed § 3170.40, Variances (Form 3160–5). Existing § 3170.6 authorizes any party that is subject to the regulations in 43 CFR part 3170 to request a variance from any of the regulations in part 3170. While § 3170.6 states that a request for a variance should be filed using the BLM's electronic system, it also allows the use of paper copies of Form 3160–5 (Sundry Notices).

Proposed § 3173.50, Site facility diagram (Form 3160–5). Existing § 3173.11 requires a site facility diagram for all facilities, which is a primary mechanism for monitoring operators' compliance with measurement regulations and policy. These IC activities enable the BLM to verify, among other things, royalty-free-use volumes reported by the operator on its Oil and Gas Operations Reports. The proposed rule requires each site facility diagram be submitted with a completed Sundry Notice.

Existing § 3173.11(f) specifies that after a site facility diagram has been submitted, operators have an ongoing obligation to update and amend a site facility diagram when facilities are modified; a non-Federal facility located on a Federal lease or federally approved unit or communitized area is constructed or modified; or there is a change in operator.

Proposed § 3173.50 (c)(6) would remove the requirement for an operator of a co-located production facility to include on the site facility diagram a skeleton diagram of other operator's co-located facility(ies).

Proposed § 3173.50(d)(1) would revise the timeframe for when an operator would have to submit a new, permanent site-facility diagram. The timeframe would be changed from 30 days after the BLM assigns an FMP to 60 days after the facility becomes operational. In addition, proposed § 3173.50(d)(2) would change the timeframe for when an operator would have to submit an amended site facility diagram for a modified, existing facility. That time frame would be changed from 30 days to 60 days after the facility is modified. The proposed 60-day timeframe would also apply when a non-Federal facility located on a Federal lease or a federally approved unit or communitized area is constructed or modified.

Proposed § 3173.60, Applying for a facility measurement point number (Form 3160–5). Existing § 3173.12 requires operators to obtain BLM approval of facility measurement points (FMPs). Existing § 3173.12(d) applies to permanent measurement facilities that come into service after January 17, 2017. Existing § 3173.12(e) applies to permanent measurement facilities in service before January 17, 2017. Both of these IC activities are one-time only. These activities assist the BLM in verifying production. All requests for an FMP must include the following:
- A complete Sundry Notice;
- The applicable Measurement Type Code specified in the BLM's Well Information System (WIS);
- For gas measurement, identification of the operator/purchaser/transporter unique station number, meter tube size or serial number, and type of secondary device;
- For oil measurement, identification of the oil tank number(s) or tank serial number(s) and size of each tank, and whether the oil was measured by LACT or CMS if not measured by tank gauge;
- Where production from more than one well will flow to the requested FMP, a list of the API well numbers associated with the FMP; and
- FMP location by land description.

This provision does not apply to temporary measurement equipment used during well testing operations. Each request must meet the requirements listed above.

The BLM, through proposed § 3173.60(d), is proposing to remove the requirement that operators list the ''station number, primary element (meter tube) size or serial number, and

type of secondary device (mechanical or electronic)'' and replace it with a requirement that operators provide ''the unique meter ID, and elevation.''

Proposed § 3173.60(d) would require the operator to identify the purchaser or transporter, and the unique meter ID. The proposed change would delete the requirement to identify whether the equipment is LACT or CMS, the associated oil tank number or serial number, and tank size.

Proposed § 3173.70, Conditions for commingling and allocation approval (surface and downhole); and Proposed § 3173.71, Applying for commingling and allocation approval (Form 3160–5). Existing § 3173.16 requires an operator to submit information to correct any inconsistencies or deficiencies identified by the BLM, where an operator's request for assignment of an FMP number (see 43 CFR 3173.12) includes a facility associated with a CAA existing on January 17, 2017. Both of these IC activities are one-time only.

Proposed § 3173.70 would revise the existing requirements for commingling and allocation approval. When an operator is interested in commingling a lease or a unit, they would request approval from the BLM. The operator(s) would provide a methodology acceptable to the BLM for allocation among the leases or agreements, from which production is to be commingled, with a signed agreement if there are more than one party.

Proposed § 3173.71 would require a separate Sundry Notice for off-lease measurement approval.

The proposed rule would require an applicant-certified statement of a surface-use plan of operations if new surface disturbance is proposed in a commingling application on BLM-managed land. This proposed change would reduce the application submission burden while ensuring a surface-use plan of operation has been prepared.

The proposed rule would remove the requirement that an operator submit a right-of-way grant with its application for commingling and allocation approval if any of its facilities would be located on Federal or Indian land. The proposed rule would require the operator to provide an applicant-certified statement that it already has a right-of-way grant for Federal rights-of-way.

The proposed rule would require that gas CAA applications be submitted separately from oil CAA applications.

Proposed § 3173.74, Modification of a commingling and allocation approval (Form 3160–5). Proposed § 3173.74(b) would add another condition that would require an operator to have the CAA reevaluated by the BLM when actual production exceeds the projected production in the commingling application. This change would not impact burden hours.

Proposed § 3173.91, Applying for off-lease measurement. Proposed § 3173.91 would clarify and simplify the requirements for an off-lease measurement application. Operators would be required to submit separate Sundry Notices for applications for off-lease measurement for each oil and gas FMP.

Proposed § 3174.43, Data Submission and notification requirements (Form 3160–5). Proposed § 3174.43(a) would revise several existing IC activities by adding a new requirement to use Form 3160–5 (Sundry Notices and Reports on Wells), a form approved by OMB under control number 1004–0137. The BLM requests the revision of control number 1004–0137 to include these uses of Sundry Notices. Existing IC activities that would be affected by the proposed rule in this way are currently authorized under control number 1004–0209:

- Documentation of Tank Calibration Table Strapping (Annual) (Proposed § 3174.82);
- Notification of LACT System Failure (Annual) (Proposed § 3174.90); and
- Approval for Slop or Waste Oil (Annual) (Proposed § 3174.180).

In addition, proposed § 3174.120, would be regulatory authorities for a new use of Sundry Notices. This new IC activity would be labeled, ''Electronic Liquid Measurement'' (ELM).

Proposed § 3174.60, Timeframes for compliance. In addition, proposed § 3174.60(b)(3) would include Sundry Notices in another new IC activity, *i.e.,* ''Notification of Early Compliance.'' Proposed § 3174.60(b)(3) would allow an operator to voluntarily begin full compliance with the requirements of 43 CFR subpart 3174 at any FMP prior to the mandatory compliance dates.

Proposed § 3174.82, Oil tank calibration. The proposed rule would retain the requirements in the existing regulations, but would add three requirements for FMP oil tank calibration. First, the tank-capacity tables would be required to be calculated for a tank-shell temperature of 60-degree F. Second, FMP tank-capacity tables would be required to be recalculated if the references gauge point is changed. Third, FMP tank calibration charts would be required to be submitted to the AO by Sundry Notice within 45 days after a calibration or recalculation of charts. The existing regulations require operators to submit tank calibration charts to the AO after calibration without specifying how they are to be submitted. The BLM needs to have the most current tank-calibration charts to provide a common tracking mechanism.

Proposed § 3174.90, LACT system—general requirements. Burdens related to notification of LACT system failure would be moved from OMB control number 1004–0209, and put under 1004–0137. Proposed § 3174.90(e) would require the operator to notify the AO by Sundry Notice within 30 days after repair of any LACT system failures or equipment malfunctions that may have resulted in measurement error. Existing requirements require operators to notify the AO within 72 hours of a LACT failure. Industry expressed concerns with 72 hours being difficult to comply with.

Proposed § 3174.120, Electronic liquids measurement, ELM (secondary and tertiary device). The IC requirements at proposed § 3174.120 would apply to any FMP with ELM equipment installed. The proposed regulation would require each ELM device to display the values and corresponding units of measurement and meter factors. The following information would have to be accessible to the BLM at the FMP without the use of data-collection equipment, laptop computers, or any special equipment:

- The make, model, and size of each sensor; and
- The make, model, range, and calibrated span of the pressure and temperature transducer used to determine gross standard volume.

The following information would have to be recorded and retained, and submitted to the BLM upon request:

- Retention of the QTR would be required on a daily (24 hour) basis, except in circumstances where batch delivery duration is less than 24 hours. In these situations, hourly data retention would be required.
- The configuration log would have to comply with the API requirements and contain and identify all constant flow parameters used in generating the QTR.
- The event log would have to comply with the API requirements and be of sufficient capacity to record all events such that the operator can retain the information under the recordkeeping requirements.
- The type and duration of any of the alarm conditions would have to be recorded.

Proposed § 3174.154, Excessive meter factor deviation. The proposed rule would allow the operator to provide a statement explaining that the excessive-

meter factor was not caused by a meter malfunction on a case-by-case basis.

Proposed § 3174.160–3174.162 Measurement tickets. The proposed rule would separate out the measurement-ticket requirement into individual sections according to the measurement type. Measurement types would include tank gauging and LACT or CMS.

Proposed § 3174.180, Determination of oil volumes by methods other than measurement. This proposed section would require an operator to get prior written approval from the BLM for sale or disposal of slop oil and require the operator to notify the BLM via Sundry Notice of the volume sold or disposed. This change would ensure that a tracking and auditing mechanism for spill oil, waste oil, and slop oil exists. Burdens related this requirement would be moved from OMB control number 1004–0209, and put under 1004–0137.

Proposed Revision of Control Number 1004–0207

The following is an explanation of how the proposed regulatory changes would affect the various subpart's collections of information:

Proposed § 3170.50, Required Recordkeeping, Records Retention, and Records Submission. Proposed § 3170.50(g) would revise the IC activity previously approved for § 3170.7(g) by adding ''land description'' to the list of information that must be included in records that are used to determine quality, quantity, disposition, and verification of production. This proposed revision would not affect the estimated burdens of control number 1004–0207.

Proposed § 3173.31, Water-Draining Operations—Gauging. Proposed § 3173.31 would revise and replace two IC activities previously approved for § 3173.6 (''Water Draining Operations—Data Collection'' and ''Water Draining Operations—Recordkeeping and Records Submission''). The proposed regulation would remove the list of information specified for water draining operations, and instead refer to the IC requirements in existing § 3173.41(b) (''Required Recordkeeping for Inventory and Seal Records''). Like the existing water-draining provisions, the proposed provision would assist the BLM in accurate accounting of oil and gas produced from Federal and Indian leases. This proposed revision would constitute a program change to control number 1004–0207 that would affect the estimated burdens as described above.

Proposal That Would Affect Both Control Number 1004–0209 and Control Number 1004–0210

Alternative Measurement Equipment and Procedures. Proposed § 3170.30 would pertain to requests to use ''alternative measurement equipment and procedures.'' Proposed § 3170.30 would apply to both oil and gas measurement, and would replace the procedures described in current § 3174.13, which applies only to the measurement of oil. Proposed § 3170.30 is not a new or separate IC activity, but rather an additional regulatory authority for other existing IC activities pertaining to measurement of oil and measurement of gas. Thus, proposed § 3170.30 would not affect the estimated burdens of control numbers 1004–0209 or 1004–0210.

Proposed Revision of Control Number 1004–0209

The following is an explanation of how the proposed regulatory changes would affect the various subparts' collections of information:

Proposed § 3174.60, Timeframes for compliance. Proposed § 3174.60 would include deadlines that would be one-time only because they apply only to equipment in operation before the effective date of the rule, if finalized. For some other activities, there would be both an annual burden for some respondents, and a one-time burden in the initial implementation of the rule. Finally, some of these IC activities would apply only annually. The labels for IC activities in subpart 3174 indicate whether the activities are one-time or annual. These proposed changes would not affect the estimated burdens of control number 1004–0209.

Proposed § 3174.82, Oil tank calibration. The proposed requirement requires submission of tank calibration tables to the BLM within 45 days after calibration. This provision ensures that BLM personnel will have the latest charts when conducting inspections or audits. The requirements related to this section would be removed from this control number and included in OMB Control Number 1004–0137.

Proposed § 3174.83, Tank gauging—procedures. During field operations, operators must obtain and document data required under Proposed § 3174.161. The proposed rule would clarify that field staff is required to collect only the observed data related to tank-gauging measurement tickets.

Proposed § 3174.90, LACT systems—general requirements. Requirements related to § 3174.7, LACT systems, would be removed from this control number and included in OMB Control Number 1004–0137. This proposed section would require the operator to notify the AO by Sundry Notice within 30 days after repair of any LACT system failures or equipment malfunctions that have resulted in measurement error.

Proposed § 3174.101, Charging pump and motor. This new section would require operators to install a charge pump and motor if the static head is insufficient to provide a net positive suction to achieve fluid pressure compatible with the oil fluid properties.

Proposed § 3174.102, Sampling and mixing system. This proposed rule seeks to replace the current requirement for testing of sampling systems, even those of the same design and construction to be individually tested. Operators expressed concern that compliance with this requirement to test all sampling systems, even those of the same design and construction, is unnecessarily burdensome and provides no benefit to the Federal Government. The BLM agrees with this assessment and seeks to change the regulation to bring it in line with other equipment standards in the regulation and allow for a single test per design. The proposed change would reduce the overall burden to operators and simplify the inspection process for the BLM.

Proposed § 3174.103, Air Eliminator. This new section would require operators to install an air eliminator to prevent gas or air from entering the meter and causing mismeasurement of oil.

Proposed § 3174.104, LACT Meter. The proposed rule would allow for other meter types on LACT units in addition to the use of positive displacement and Coriolis meters. This would not change burdens.

Proposed § 3174.105, Electronic temperature averaging device. The proposed rule would allow operators to use a flow computer to perform the temperature averaging. The change makes clear that the regulation allows for stand-alone temperature averaging devices or temperature transmitters working in conjunction with a flow computer. Pursuant to proposed § 3174.105(a), a stand-alone temperature-averaging device would require PMT review and BLM approval. Similarly, under proposed § 3174.105(b), a temperature transducer must have received BLM approval.

Proposed § 3174.107, Meter Proving Connection. This new section specifies requirements for meter-proving connections, including a leak detecting double block and bleed-valve configuration. Existing subpart 3174 does not reference meter-proving

connections or leak-detection systems and instead incorporates the API 6.1 standard, which is not sufficiently specific. Leak detection during the proving process is critical to determining an accurate meter factor.

Proposed § 3174.110, Coriolis meter—operating requirements. This section would provide operating requirements for the Coriolis meter—whether it is a stand-alone unit or is part of a LACT—and its transmitter. Proposed § 3174.110(a) and (b) would require Coriolis meters and Coriolis transmitters to be on the approved equipment list at *www.blm.gov.* The proposed 3174.9(b) is new and it would allow for a Coriolis transmitter to have a separate approval from a Coriolis meter. A Coriolis meter is always used in conjunction with a transmitter. The BLM believes that this proposed change will alleviate concerns that each meter and transmitter combination would require additional individual approval.

Proposed § 3174.120, Electronic liquid measurement system, ELM (secondary and tertiary device). This proposed section applies to flow computers (ELM systems) that are connected to Coriolis meters and their transmitters. Although this section does not have a direct corollary in existing subpart 3174, it contains many of the same requirements that appear in the existing Coriolis meter regulations at § 3174.10.

The modification to this regulation separates ELM system requirements from Coriolis meter requirements.

The existing regulation requires operators to use a tertiary device (flow computer and associated memory, calculation, and display functions) for all CMS FMPs. The proposed changes bring the software-testing requirements for electronic oil measurement in line with the requirements of electronic gas measurement in subpart 3175, which provides for uniformity in these requirements to alleviate the burdens that having two differing test protocols.

Proposed § 3174.121, Measurement data system. This new section would establish that measurement data systems (MDS) must be approved by the BLM for use at an FMP. MDS are designed to gather, edit, store, and report measurement data. By requiring that MDSs be BLM approved, industry would not have any questions or confusion when selecting an MDS system for use at an FMP.

Proposed § 3174.140, Temporary measurement. The BLM is proposing to add a new § 3174.140 to address temporary measurement. A temporary oil meter would have to meet all the requirements of an FMP with some modified requirements based on the limited timeframe the meter will be on the location (for example, proving requirements).

Proposed § 3174.158, Meter proving reporting requirements. The proposed rule would provide a detailed list of specific data required for reporting, and would specify a required calculation sequence to be followed in the meter factor calculation. The BLM believes that providing a detailed list of required reporting data would remove any confusion about the exact data that is required on the report.

Proposed § 3174.158(c) would change the proving-report submission requirements of existing § 3174.11(i)(3) from requiring an operator to submit each report within 14 days after a meter proving to only requiring an operator to submit a proving report when requested by the AO. This change has been proposed to make this regulation less burdensome to industry while retaining the BLM's audit capabilities for verifying proving reports.

Proposed § 3174.160, Measurement tickets. The proposed rule would separate out the measurement-ticket requirements into individual sections according to the measurement type, tank gauging, and LACT or CMS. This proposed rule would retain the existing requirement that measurement tickets be made available upon request of the AO. This requirement falls under OMB Control Number 1004–0137.

Proposed Revision of Control Number 1004–0210

The following is an explanation of how the proposed regulatory changes would affect the various subparts' collections of information:

Proposed § 3175.40, Measurement equipment. The proposed rule would revise and replace some of these provisions pertaining to gas-measurement equipment. The BLM is proposing these changes in order to streamline and better organize the regulations. Proposed § 3175.40 would replace the following existing regulations and associated IC activities:

- 43 CFR 3175.43 and 3175.130 (Transducers—Test Data Collection and Submission for Existing Makes and Models; One-Time);
- 43 CFR 3175.43 and 3175.130 (Transducers—Test Data Collection and Submission for Future Makes and Models; Annual);
- 43 CFR 3175.44 and 3175.140 (Flow-Computer Software—Test Data Collection and Submission for Existing Makes and Models; One-Time);
- 43 CFR 3175.44 and 3175.140 (Flow-Computer Software—Test Data Collection and Submission for Future Makes and Models; Annual);
- 43 CFR 3175.46 (Isolating Flow Conditioners—Test Data Collection and Submission for Existing Makes and Models; One-Time);
- 43 CFR 3175.47 (Differential Primary Devices Other Than Flange-Tapped Orifice Plates—Test Data Collection and Submission for Existing Makes and Models; One-Time);
- 43 CFR 3175.48 (Linear Measurement Devices—Test Data Collection and Submission for Existing Makes and Models; One-Time);
- 43 CFR 3175.48 (Linear Measurement Devices—Test Data Collection and Submission for Future Makes and Models; Annual);
- 43 CFR 3175.49 (Accounting Systems—Test Data Collection and Submission for Existing Makes and Models; One-Time); and
- 43 CFR 3175.49 (Accounting Systems—Test Data Collection and Submission for Future Makes and Models; Annual).

Proposed § 3175.41, Approved measurement equipment. Proposed § 3175.41 would provide that the following types of equipment are automatically approved for use if they meet standards prescribed in the regulations at subpart 3175:

- Flange-tapped orifice plates (existing § 3175.41);
- Chart recorders for low- and very-low-volume FMPs (existing § 3175.42); and
- Gas chromatographs (existing § 3175.45).

In addition, proposed § 3175.41 would provide that the following types of equipment would be automatically approved if they meet standards prescribed in the regulations at subpart 3175:

- Transducers, when used at low- and very-low volume FMPs; and (existing §§ 3175.43 and 3175.130); and
- Flow-computer software, when used at low- and very-low volume FMPs (existing §§ 3175.44 and 3175.140).

The existing regulations require BLM approval of all makes and models of transducers and flow-computer software developed and used at FMPs after January 17, 2017 (*i.e.,* the effective date of the existing rule). Proposed § 3175.41 would reduce the number of makes and model of transducers and flow-computer software that would be subject to these IC activities. BLM proposes to include a new form entitled, ''Equipment Application Coversheet.'' Operators would be required to use BLM-approved measurement equipment. However, manufacturers of equipment would need to provide data

on testing equipment using the new form. The existing regulations explain that an oil and gas operator may have applied for review and approval because the equipment was old and no longer supported by the manufacturer. The proposed rule provides an exemption for the older equipment. Therefore, it's unlikely the BLM will receive data from an operator.

Proposed § 3175.60, Timeframes for compliance. Subpart 3175, as revised by the proposed rule, would include timeframes for compliance. These timeframes, at proposed 43 CFR 3175.60, would include deadlines that would be one-time-only because they apply only to equipment in operation before the effective date of the rule, if finalized. For some other activities, there would be both an annual burden for some respondents, and a one-time burden in the initial implementation of the rule. Finally, some of these IC activities would apply only annually. The labels for IC activities in subpart 3175 indicate whether the activities are one-time or annual. These proposed changes would not affect the estimated burdens of control number 1004–0210.

Proposed § 3175.80, Flange-tapped orifice plate (primary device). Proposed § 3175.80 would revise existing IC activities pertaining to inspections and verifications of primary devices. Some of these information collection activities are usual and customary because they are required by gas sales contracts and/or industry standards. To the extent they are usual and customary, they are not ''burdens'' under the PRA (see 5 CFR 1320.3(b)(2)). A description of what is considered usual and customary is given for each applicable activity in the supporting statement.

The proposed regulation would revise the following existing IC activities:

- Schedule of Basic Meter Tube Inspection;
- Basic Inspection of Meter Tubes—Data Collection and Submission;
- Detailed Inspection of Meter Tubes—Data Collection and Submission; and
- Request for Extension of Time for a Detailed Meter Tube Inspection.

Proposed § 3175.80(j) would add an initial basic meter-tube inspection that would require operators to perform a basic meter-tube inspection within 1 year after installation of a very-high-volume FMP and within 2 years after installation of a high-volume FMP. This requirement would only apply to FMPs installed after the effective date of the final rule.

Proposed § 3175.80(k) would require operators to perform a basic meter-tube inspection every 5 years at both high- and very-high-volume FMPs, and every 10 years at low-volume FMPs. Very-low volume FMPs would continue to be exempt. The BLM would also add a requirement for an initial basic meter-tube inspection for high- and very-high-volume FMPs.

Under proposed § 3175.80(k)(3), provisions would be added to identify a required course of action based on the results of the basic meter-tube inspection. If the only issue identified on a high- or very-high-volume FMP is an obstruction, proposed paragraph (i) would only require the operator to remove the obstruction; a detailed inspection would no longer be required. Proposed paragraph (ii) would only require the operator to clean the meter tube at low-volume FMPs if the basic meter-tube inspection identified a buildup of foreign substances. If the basic meter-tube inspection at a high- or very-high-volume FMP revealed pitting or a buildup of foreign substances, then the operator would have to perform a detailed meter-tube inspection.

Proposed § 3175.92, Verification and calibration of mechanical recorders. Proposed § 3175.92(e)(1) would change the amount of time an operator has to notify the BLM prior to performing a verification after installation or following a repair. This rule would change the timeframe to 1 business day. The existing regulation requires a minimum of a 72-hour notice prior to performing the verification. The change to 1 business day would allow operators to provide a more accurate notification.

Proposed § 3175.92(e)(2) would modify the timeframe for notifying the BLM of routine verification. Currently, operators must notify the AO at least 72 hours before performing a verification or submit a monthly or quarterly schedule of verifications. The BLM is proposing to modify the requirement to allow operators to either provide at least 72-hours' notice to the AO or submit a list of FMPs that the operator plans to verify over the next month or next quarter. The operator would no longer have to notify the BLM or submit a schedule of when each FMP would be verified. This list would show all verifications planned for that month or quarter, but not the specific day for each location.

Proposed § 3175.101, Installation and operation of electronic gas measurement systems. Existing and proposed § 3175.101 define the installation and operation requirements of EGM systems. The proposed rule would clarify parts of the requirements for the connection of EGM devices and modify the on-site information requirements.

Proposed new § 3175.101(b)(4) would modify the existing requirement that operators display the software version at the FMP location. The proposed language would limit that requirement to high- and very-high volume FMPs. The BLM feels that the current requirement imposes an undue burden on operators.

Proposed new § 3175.101(b)(6) would modify a provision that requires operators to either display previous-period averages for differential pressure, static pressure, and temperature, or post a QTR on-site that is no more than 31 days old. The BLM is proposing a modification to the QTR posting requirement in the existing regulations. Instead of requiring operators to post recent QTRs at every location that does not have a flow computer capable of displaying the required average values, the BLM would require operators to submit the most recent QTR when the BLM requests it.

Proposed § 3175.101(c)(3) would allow for operators to provide either the FMP elevation or the atmospheric pressure at the FMP. The BLM is proposing to allow atmospheric pressure to be posted at the FMP instead of meter elevation because either value will allow the BLM to verify the flow computer.

Proposed § 3175.101(c)(13) would add a requirement that the operator post the last meter-tube inspection date. The BLM is proposing to add this requirement in order to allow BLM inspectors to verify that the operator is inspecting the meter tube at the frequency required under proposed § 3175.80(l) and (m). The operator would post either the last basic meter-tube inspection date or the last detailed meter-tube inspection date, whichever is more recent.

Proposed § 3175.102, Verification and calibration of electronic gas measurement system. Existing and proposed § 3175.102 define the verification and calibration requirements for EGM systems. The proposed update would modify and clarify this section, with a particular focus on the methods used to determine atmospheric pressure, verification frequency, stability and drift, reporting requirements. The proposed rule would also address confusion with respect to notification requirements.

Proposed § 3175.104, Logs and records. Existing § 3175.104 defines the requirements for records and logs pertaining to several categories of equipment. The BLM has determined that the level of detail required in the current regulation is beyond the capabilities of many operators' flow computers. The proposed regulation would modify the existing regulation to

allow for the use of existing equipment while preserving accountability requirements.

Proposed § 3175.104 would require the operator to retain, and submit to the BLM upon request, quantity transaction records (QTRs), configuration logs, event logs, and an alarm log, all of which comply with standards of the American Petroleum Institute (which are incorporated by reference in the proposed rule).

Proposed § 3175.113, Spot samples—general requirements. The BLM is proposing to modify this requirement to allow operators to submit a list of FMPs that the operator plans to sample over the next month or next quarter. The operator would no longer have to notify the BLM or submit a schedule of when each FMP would be sampled. The BLM believes the list of wells an operator intends to sample provides enough information to prioritize which gas samplings the BLM should witness.

Proposed § 3175.113(c)(3) would allow operators to seek approval from the PMT for alternative methods of cleaning sample cylinders.

Under the proposed rule, the BLM would remove § 3175.113(d)(5) and (d)(6) of the existing regulations and replace them with different requirements (§ 3175.113(d)(5) through (d)(8)). Operators have expressed concern that the existing requirement not only increases their documentation burdens, but can also be difficult, if not impossible, to achieve. In 2018, an industry group developed a standard operating procedure (SOP) that contained a number of objective measures to help ensure quality control when using a portable GC. The BLM recommended the use of this SOP in Washington Office Instruction Memorandum (IM) 2018–069. The proposed rule would incorporate many of the recommendations that were included in the SOP.

Proposed § 3175.115, Spot samples—frequency. The BLM would delete existing § 3175.115(b)(5), which requires operators to install composite samplers or on-line GCs at very-high-volume FMPs when the BLM determines that the required level of average annual heating value uncertainty at an FMP cannot be achieved through spot sampling. The BLM is proposing to delete this requirement because it believes that the proposed increase in average annual heating value uncertainty would render this requirement largely unnecessary.

Proposed § 3175.115(d) would increase the amount of time operators would have to install a composite sampling system or on-line GC from 30 days after the due date of the next sample to 90 days after the due date of the next sample. This proposed change is based on industry concerns that the lead-time operators need to plan for, order, and install on-line GCs or composite sampling systems is commonly greater than 30 days. During this 90-day period an operator would not have to take spot samples.

Proposed § 3175.116, Composite sampling methods. Proposed § 3175.116(c) would add a requirement that sample cylinders used in composite sampling systems comply with the general spot-sample requirements under § 3175.113(c). The BLM believes that the omission of these requirements for composite sample systems was an oversight and will add a slight increase in burdens to industry, although they represent common industry best practice. To reduce unnecessary burden on industry while still meeting the desired intent of a more detailed analysis, the BLM proposes to only require C_9+ analysis. This change reduces the overall number of responses for this requirement.

Proposed § 3175.118, Gas chromatograph requirements. Under existing § 3175.118(e) operators are required to perform extended analyses in accordance with GPA 2286–14. This proposed rule would remove this requirement.

Proposed § 3175.120, Gas analysis report requirements. Proposed § 3175.120(a)(18) would remove the requirement that the gas analysis report must show the un-normalized mole percent for each component analyzed and instead only require the sum of the un-normalized mole percents from all analyzed components. The BLM does not use this information and collecting it is an unnecessary burden on operators.

Proposed § 3175.125, Calculation of heating value and volume. Under proposed § 3175.125(b)(1), the existing requirement for calculating and reporting an average heating value would only apply if a lease, unit PA, or CA has more than one FMP that doesn't yet have an FMP number. The BLM proposes this change to reduce unnecessary reporting burdens on industry by removing the requirement to report the average heating value for a lease, unit PA, or CA once the BLM assigns individual FMP numbers.

Proposed § 3175.140, Temporary measurement. The BLM is proposing to add a new section under § 3175.140 to address temporary measurement. Temporary measurement is defined in 43 CFR 3170.10 as a meter that is in place for less than 3 months. Temporary measurement typically applies to a gas meter that is part of a measurement skid used to measure the oil and gas from a newly drilled well before the permanent measurement facility is installed. The existing rule does not address temporary measurement.

Under proposed § 3175.140, a temporary gas meter would have to meet all the requirements of an FMP except for the routine verifications required for mechanical recorders and EGM systems, basic meter-tube inspections, and detailed meter-tube inspections.

Some of the recordkeeping requirements in the proposed rule are ''usual and customary'' within the meaning of 5 CFR 1320.3(b)(2), since they are commonly found in gas sales contracts and/or industry standards. Therefore, they are not among the ''burdens'' that must be disclosed under the Paperwork Reduction Act. Some other proposed activities in the regulations are usual and customary only in part. The burdens of those activities are analyzed to the extent they are not usual and customary.

As part of our continuing effort to reduce paperwork and respondent burdens, we invite the public and other Federal agencies to comment on any aspect of this information collection, including:

(1) Whether or not the collection of information is necessary for the proper performance of the functions of the agency, including whether or not the information will have practical utility;

(2) The accuracy of our estimate of the burden for this collection of information, including the validity of the methodology and assumptions used;

(3) Ways to enhance the quality, utility, and clarity of the information to be collected; and

(4) Ways to minimize the burden of the collection of information on those who are to respond, including through the use of appropriate automated, electronic, mechanical, or other technological collection techniques or other forms of information technology, *e.g.,* permitting electronic submission of response.

Send your comments and suggestions on this information collection by the date indicated earlier.

Written comments and recommendations for the proposed information collection should be sent on or before October 13, 2020 to *www.reginfo.gov/public/do/PRAMain.* Find the particular information collection by selecting ''Currently under Review—Open for Public Comments'' or by using the search function. If you submit comments to OMB on the IC activities in this proposed rule, you

should provide the BLM with a copy at one of the street addresses shown earlier in this proposed rule so that we can summarize all written comments and address them in the final rulemaking. Please do not submit to OMB comments that do not pertain to the proposed rule's IC burdens. The BLM is not obligated to consider or include in the Administrative Record for the final rule any comments, which do not relate to the information collection burdens, that you improperly direct to OMB.

National Environmental Policy Act

The BLM has prepared a draft EA to determine whether this proposed rule would have a significant impact on the quality of the human environment under the National Environmental Policy Act of 1969 (NEPA) (42 U.S.C. 4321 *et seq.*). The draft EA will be shared with the public during the public comment period on the proposed rule. The BLM will respond to substantive comments on the EA. If the final EA supports the issuance of a Finding of No Significant Impact for the rule, the preparation of an environmental impact statement pursuant to the NEPA would not be required.

The draft EA has been placed in the file for the BLM's Administrative Record for the rule at the address specified in the **ADDRESSES** section. The EA has also been posted in the docket for the rule on the Federal eRulemaking Portal: *https://www.regulations.gov.* In the Searchbox, enter ''RIN 1004–AE59'', click the ''Search'' button, open the Docket Folder, and look under Supporting Documents. The BLM invites the public to review the draft EA and suggests that anyone wishing to submit comments on the EA should do so in accordance with the instructions contained in the ''Public Comment Procedures'' section earlier.

Actions Concerning Regulations That Significantly Affect Energy Supply, Distribution, or Use (Executive Order 13211)

This proposed rule is not a significant energy action under the definition in Executive Order 13211. A statement of Energy Effects is not required.

Section 4(b) of Executive Order 13211 defines a ''significant energy action'' as ''any action by an agency (normally published in the **Federal Register**) that promulgates or is expected to lead to the promulgation of a final rule or regulation, including notices of inquiry, advance notices of rulemaking, and notices of rulemaking: (1)(i) That is a significant regulatory action under Executive Order 12866 or any successor order, and (ii) Is likely to have a significant adverse effect on the supply, distribution, or use of energy; or (2) That is designated by the Administrator of the Office of Information and Regulatory Affairs as a significant energy action.''

The BLM reviewed the proposed rule, and we do not consider it to be a ''significant energy action'' as defined in Executive Order 13211. The BLM has found that the proposed rule would not be economically significant under Executive Order 12866. The proposed rule would revise certain requirements in the 2016 Final Rules in a manner that would reduce compliance burdens. While these savings are certainly beneficial to industry from both an operational and financial standpoint, the BLM finds that they are relatively minor when compared to industry net profits, and the changes are not expected to have an effect on the supply, distribution, or use of energy. Further, the Administrator of the Office of Information and Regulatory Affairs did not designate the proposed rule as a significant energy action.

Clarity of This Regulation (Executive Orders 12866, 12988, and 13563)

We are required by Executive Orders 12866 (section 1(b)(12)), 12988 (section 3(b)(1)(B)), and 13563 (section 1(a)), and by the Presidential Memorandum of June 1, 1988, to write all rules in plain language. This means that each rule must:

(a) Be logically organized;

(b) Use the active voice to address readers directly;

(c) Use common, everyday words and clear language rather than jargon;

(d) Be divided into short sections and sentences; and

(e) Use lists and tables wherever possible.

If you feel that we have not met these requirements, send us comments by one of the methods listed in the **ADDRESSES** section. To better help the BLM revise the rule, your comments should be as specific as possible. For example, you should tell us the numbers of the sections or paragraphs that you find unclear, which sections or sentences are too long, the sections where you feel lists or tables would be useful, etc.

Authors

The principal authors of this proposed rule are: Michael McLaren, Richard Estabrook (Retired), Beth Poindexter, Stormy Phillips (Contractor), Michael Ford, and Barbara Sterling of the BLM Washington Office; assisted by Abdelgadir Elmadani of the BLM Eastern States Office, Gail Clayton of the BLM Farmington, New Mexico Field Office, Christopher DeVault of the BLM Montana State Office, Laura Lozier of the BLM Lander, Wyoming Field Office, Noell Sturdevant and Thomas Zelenka of the BLM New Mexico State Office, Matthew Wokosin of the BLM Dickinson, North Dakota Field Office, Faith Bremner of the BLM's Division of Regulatory Affairs, Michael Wade, Gregory Muehl and James Tichenor of the BLM Washington Office and by the Department of the Interior's Office of the Solicitor.

List of Subjects in 43 CFR Part 3170

Administrative practice and procedure, Flaring, Government contracts, Incorporation by reference, Indians-lands, Immediate assessments, Mineral royalties, Oil and gas exploration, Oil and gas measurement, Public lands—mineral resources, Reporting and record keeping requirements, Royalty-free use, Venting.

Casey Hammond,

Principal Deputy Assistant Secretary, Exercising the Authority of the Assistant Secretary, Land and Minerals Management.

43 CFR Chapter II

For the reasons set out in the preamble, the Bureau of Land Management proposes to amend 43 CFR part 3170 as follows:

PART 3170—ONSHORE OIL AND GAS PRODUCTION

■ 1. The authority citation for part 3170 continues to read as follows:

Authority: 25 U.S.C. 396d and 2107; 30 U.S.C. 189, 306, 359, and 1751; and 43 U.S.C. 1732(b), 1733, and 1740.

■ 2. Revise subpart 3170 to read as follows:

Subpart 3170—Onshore Oil and Gas Production: General

Sec.
3170.1 Authority.
3170.2 Scope.
3170.10 Definitions and acronyms.
3170.20 Prohibitions against by-pass and tampering.
3170.30 Alternative measurement equipment and procedures.
3170.40 Variances.
3170.50 Required recordkeeping, records retention, and records submission.
3170.60 Appeal procedures.
3170.70 Enforcement.

Subpart 3170—Onshore Oil and Gas Production: General

§ 3170.1 Authority.

The authorities for promulgating the regulations in this part are the Mineral Leasing Act, 30 U.S.C. 181 *et seq.;* the Mineral Leasing Act for Acquired Lands, 30 U.S.C. 351 *et seq.;* the Federal Oil and Gas Royalty Management Act,

30 U.S.C. 1701 *et seq.;* the Indian Mineral Leasing Act, 25 U.S.C. 396a *et seq.;* the Act of March 3, 1909, 25 U.S.C. 396; the Indian Mineral Development Act, 25 U.S.C. 2101 *et seq.;* and the Federal Land Policy and Management Act, 43 U.S.C. 1701 *et seq.* Each of these statutes gives the Secretary the authority to promulgate necessary and appropriate rules and regulations governing Federal and Indian (except Osage Tribe) oil and gas leases. See 30 U.S.C. 189; 30 U.S.C. 359; 25 U.S.C. 396d; 25 U.S.C. 396; 25 U.S.C. 2107; and 43 U.S.C. 1740. Under Secretary's Order Number 3087, dated December 3, 1982, as amended on February 7, 1983 (48 FR 8983), and the Departmental Manual (235 DM 1.1), the Secretary has delegated regulatory authority over onshore oil and gas development on Federal and Indian (except Osage Tribe) lands to the BLM. For Indian leases, the delegation of authority to the BLM is reflected in 25 CFR parts 211, 212, 213, 225, and 227. In addition, as authorized by 43 U.S.C. 1731(a), the Secretary has delegated to the BLM regulatory responsibility for oil and gas operations on Indian lands. 235 DM 1.1.K.

§ 3170.2 Scope.

The regulations in this part apply to:

(a) All Federal onshore and Indian oil and gas leases (other than those of the Osage Tribe);

(b) Indian Mineral Development Act (IMDA) agreements for oil and gas, unless specifically excluded in the agreement or unless the relevant provisions of the rule are inconsistent with the agreement;

(c) Leases and other business agreements for the development of tribal energy resources under a Tribal Energy Resource Agreement entered into with the Secretary, unless specifically excluded in the lease, other business agreement, or Tribal Energy Resource Agreement;

(d) State or private tracts committed to a federally approved unit or communitization agreement (CA) as defined by or established under 43 CFR subpart 3105 or 43 CFR part 3180;

(e) All onshore facility measurement points where oil or gas produced from the leases or agreements identified earlier in this section is measured; and

(f) Measurement points on BLM-managed gas storage agreements.

§ 3170.10 Definitions and acronyms.

(a) As used in this part, the term:

Alarm log means a log for recording any system alarm, user-defined alarm, or error conditions (such as out-of-range temperature or pressure) that occur. This includes a description of each alarm condition and the times the condition occurred and cleared.

Allocated or allocation means a method or process by which production is measured at a central point and apportioned to the individual lease, or unit Participating Area (PA), or CA from which the production originated.

Audit trail means all source records necessary to verify and recalculate the volume and quality of oil or gas production measured at a facility measurement point (FMP) and reported to the Office of Natural Resources Revenue (ONRR).

Authorized officer (AO) has the same meaning as defined in 43 CFR 3000.0–5.

Averaging period means the previous 12 months or the life of the meter, whichever is shorter. For Facility Measurement Points (FMPs) that measure production from a newly drilled well, the averaging period excludes production from that well that occurred in or before the first full month of production. (For example, if an oil FMP and a gas FMP were installed to measure only the production from a new well that first produced on April 10, the averaging period for this FMP would not include the production that occurred in April (partial month) and May (full month) of that year.)

Bias means a shift in the mean value of a set of measurements away from the true value of what is being measured.

By-pass means any piping or other arrangement around or avoiding a meter or other measuring device or method (or component thereof) at an FMP that allows oil or gas to flow without accountability. Equipment that permits the changing of the orifice plate of a gas meter without bleeding the pressure off the gas meter run (*e.g.,* senior fitting) is not a by-pass. Piping around a meter with a double block and bleed valve (or a series of valves that ensure valve integrity) that must be effectively sealed under § 3173.20, could be approved by the AO or be part of a PMT-approved process and would not be a by-pass.

Commingling, for production accounting and reporting purposes, means combining, before the point of royalty measurement, production from more than one lease, unit PA, or CA, or production from one or more leases, unit PAs, or CAs with production from State, local governmental, or private properties that are outside the boundaries of those leases, unit PAs, or CAs. Combining production from multiple wells within a single lease, unit PA, or CA, or combining production downhole from different geologic formations within the same lease, unit PA, or CA, is not considered commingling for production accounting purposes.

Communitization agreement (CA) means an agreement to combine a lease, or a portion of a lease that cannot otherwise be independently developed and operated in conformity with an established well spacing or well development program, with other tracts for purposes of cooperative development and operations.

Communitized area means the area committed to a BLM approved communitization agreement.

Condition of Approval (COA) means a site-specific requirement included in the approval of an application that may limit or modify the specific actions covered by the application. Conditions of approval may minimize, mitigate, or prevent impacts to public lands or resources.

Configuration log means a record that contains and identifies all selected flow parameters used in the generation of a quantity transaction record.

Days means consecutive calendar days, unless otherwise indicated.

Event log means an electronic record of all exceptions and changes to the flow parameters contained within the configuration log that have an impact on a quantity transaction record.

Facility means:

(i) A site and associated equipment used to process, treat, store, or measure production from or allocated to a Federal or Indian lease, unit PA, or CA that is located upstream of or at (and including) the approved point of royalty measurement; and

(ii) A site and associated equipment used to store, measure, or dispose of produced water that is located on a lease, unit, or communitized area.

Facility measurement point (FMP) means a point where oil or gas produced from a Federal or Indian lease, unit PA, CA, or gas storage agreement involving production of native gas or oil is measured and the measurement affects the calculation of the volume or quality of production on which royalty is owed or a point where fluid is measured on a Federal or Indian storage agreement and the measurement affects the calculation of the volume or quality of fluid on which injection and withdrawal fees are owed. An FMP includes all measurement points relevant to determining the allocation of production to Federal or Indian leases, unit PAs, or CAs. However, allocation facilities that are part of a commingling and allocation approval under § 3173.71 or that are part of a commingling and allocation approval approved after July 9, 2013, are not FMPs. An FMP must be located on the lease, unit, or

communitized area unless the BLM approves measurement off the lease, unit, or CA (see 43 CFR 3162.7–2, 3162.7–3, 3173.71, 3173.72, 3173.92, and 3173.93). An FMP cannot be located at the tailgate of a gas processing plant located off the lease, unit, or CA. Measurement points for flared volumes are not FMPs.

FMP number means a number assigned by the BLM to the FMP after review of an FMP application.

Gas means any fluid, either combustible or noncombustible, hydrocarbon or non-hydrocarbon, that has neither independent shape nor volume, but tends to expand indefinitely and exists in a gaseous state under metered temperature and pressure conditions.

Incident of Noncompliance (INC) means a BLM-issued documentation that identifies violations and notifies the recipient of required corrective actions.

Land description means a location surveyed in accordance with the U.S. Department of the Interior's Manual of Surveying Instructions (2009), as amended, that includes the quarter-quarter section, section, township, range, and principal meridian, or other authorized survey designation acceptable to the AO, such as metes-and-bounds, or latitude and longitude.

Lease has the same meaning as defined in 43 CFR 3160.0–5.

Lessee has the same meaning as defined in 43 CFR 3160.0–5.

Measurement data system (MDS) means a system that captures and stores source records from the flow computer at an FMP. The MDS is used by operators to validate, balance, and report volume and quality. An MDS does not include Supervisory Control and Data Acquisition (SCADA) systems.

NIST traceable means an unbroken and documented chain of comparisons relating measurements from field or laboratory instruments to a known standard maintained by the National Institute of Standards and Technology (NIST).

Notice to lessees and operators (NTL) has the same meaning as defined in 43 CFR 3160.0–5.

Notify means to contact by any method including, but not limited to, electronically (*e.g.,* email), in person, by telephone, by Form 3160–5 (Sundry Notice), by letter.

Off-lease measurement means measurement at an FMP that is not located on the lease, unit, or communitized area from which the production came.

Oil means a mixture of hydrocarbons that exists in the liquid phase at the temperature and pressure at which it is measured. Condensate is considered to be oil for purposes of this part. Gas liquids extracted from a gas stream upstream of the approved point of royalty measurement are considered to be oil for purposes of this part.

(i) *Clean oil or Pipeline oil* means oil that is of such quality that it is acceptable to normal purchasers.

(ii) *Slop oil* means oil that is of such quality that it is not acceptable to normal purchasers and is usually sold to oil reclaimers. Oil that can be made acceptable to normal purchasers through special treatment that can be economically provided at existing or modified facilities or using portable equipment at or upstream of the FMP is not slop oil.

(iii) *Waste oil* means oil that has been determined by the AO or authorized representative to be of such quality that it cannot be treated economically and put in a marketable condition with existing or modified lease facilities or portable equipment, cannot be sold to reclaimers, and has been determined by the AO to have no economic value.

Operator has the same meaning as defined in 43 CFR 3160.0–5.

Participating area (PA) has the same meaning as defined in 43 CFR 3180.0–5.

Permanent measurement facility means all equipment used on-site for 3 months or longer, that is used for the purposes of determining the quantity or quality of production, or for the storage of production, and which meets the definition of an FMP under this section.

Point of royalty measurement means a BLM-approved FMP at which the volume and quality of oil or gas which is subject to royalty is measured. The point of royalty measurement is to be distinguished from meters that determine only the allocation of production to particular leases, unit PAs, CAs, or non-Federal and non-Indian properties. The point of royalty measurement is also known as the point of royalty settlement.

Production means oil or gas removed from a well bore and any products derived therefrom.

Production Measurement Team (PMT) means a panel of members from the BLM (which may include BLM-contracted experts) that reviews changes in industry measurement technology, methods, and standards to determine whether regulations should be updated, and provides guidance on measurement technologies and methods not addressed in current regulation.

Purchaser means any person or entity who legally takes ownership of oil or gas in exchange for financial or other consideration.

Source record means any unedited and original record, document, or data that is used to determine volume and quality of production, regardless of format or how it was created or stored (*e.g.,* paper or electronic). It includes, but is not limited to, raw and unprocessed data (*e.g.,* instantaneous and continuous information used by flow computers to calculate volumes); gas charts; measurement tickets; calibration, verification, prover, and configuration reports; pumper and gauger field logs; volume statements; event logs; seal records; and gas analyses.

Statistically significant describes a difference between two data sets that exceeds the threshold of significance.

Tampering means any deliberate adjustment or alteration to a meter or measurement device, appropriate valve, or measurement process that could introduce bias into the measurement or affect the BLM's ability to independently verify volumes or qualities reported.

Temporary measurement facility means an FMP in place for less than 3 months. A temporary measurement facility will not receive an FMP number.

Threshold of significance means the maximum difference between two data sets (a and b) that can be attributed to uncertainty effects. The threshold of significance is determined as follows:

$$T_s = \sqrt{U_a^2 + U_b^2}$$

where:

T_s = Threshold of significance, in percent

U_a = Uncertainty (95 percent confidence) of data set a, in percent

U_b = Uncertainty (95 percent confidence) of data set b, in percent

Total observed volume (TOV) means the total measured volume of all oil, sludges, sediment and water, and free water at the measured or observed temperature and pressure.

Transporter means any person or entity who legally moves or transports oil or gas from an FMP.

US well number means a unique, permanent, numeric identifier assigned to each well drilled for oil and gas in the United States, which includes the completion code. The US well number replaces the old API well number.

Uncertainty means the statistical range of error that can be expected between a measured value and the true value of what is being measured. Uncertainty is determined at a 95 percent confidence level for the purposes of this part.

Unit means the land within a unit area as defined in 43 CFR 3180.0–5.

Unit PA means the unit participating area, if one is in effect, the exploratory unit if there is no associated participating area, or an enhanced recovery unit.

Variance means an approved alternative to a provision or standard of a regulation, Onshore Oil and Gas Order, or NTL.

(b) As used in this part, the following additional acronyms apply:

API means American Petroleum Institute.

BLM means the Bureau of Land Management.

Btu means British thermal unit.

CMS means Coriolis Measurement System.

LACT means lease automatic custody transfer.

OGOR means Oil and Gas Operations Report (Form ONRR–4054 or any successor report).

ONRR means the Office of Natural Resources Revenue, U.S. Department of the Interior, and includes any successor agency.

S&W means sediment and water.

WIS means Well Information System or any successor electronic filing system.

§ 3170.20 Prohibitions against by-pass and tampering.

(a) All by-passes are prohibited.

(b) Tampering with any measurement device, component of a measurement device, or measurement process is prohibited.

(c) Any by-pass or tampering with a measurement device, component of a measurement device, or measurement process may, together with any other remedies provided by law, result in an assessment of civil penalties, pursuant to 30 U.S.C. 1719 and 43 CFR 3163.2, for knowingly or willfully:

(1) Taking, removing, transporting, using, or diverting oil or gas from a lease site without valid legal authority; or

(2) Preparing, maintaining, or submitting false, inaccurate, or misleading reports, records, or information.

§ 3170.30 Alternative measurement equipment and procedures.

(a) Any operator or manufacturer may request approval for the use of alternate oil or gas measurement equipment or measurement methods. Any operator or manufacturer requesting such approval must submit to the BLM performance data, actual field test results, laboratory test data, or any other supporting data or evidence requested by the BLM demonstrating that the proposed alternate oil or gas measurement equipment or method would meet or exceed the objectives of the applicable minimum standards of part 3170 and would not affect royalty income, production accountability, or site security.

(b) The PMT will review the submitted data to ensure that the alternate oil and gas measurement equipment or method meets the standards of part 3170. The PMT will make a recommendation, including conditions of approval, to the BLM to approve use of the equipment or method that the PMT determines meets the standards of part 3170. If the PMT recommends, and the BLM approves, new measurement equipment or methods, the BLM will post the make, model, range or software version (as applicable), or method on the BLM website *www.blm.gov* as being appropriate for use at an FMP for oil or gas measurement without further approval by the BLM, subject to any conditions of approval identified by the PMT and approved by the BLM.

(c) The procedures for requesting and granting a variance under § 3170.40 may not be used as an avenue for approving new measurement technology, methods, or equipment. Approval of alternative oil or gas measurement equipment or methods must be obtained by following the requirements of this section.

§ 3170.40 Variances.

(a) Any party subject to a requirement of a regulation in this part may request a variance from that requirement.

(1) A request for a variance must include the following:

(i) Identification of the specific requirement from which the variance is requested;

(ii) Identification of the length of time for which the variance is requested, if applicable;

(iii) An explanation of the need for the variance;

(iv) A detailed description of the proposed alternative means of compliance;

(v) A showing that the proposed alternative means of compliance will produce a result that meets or exceeds the objectives of the applicable requirement for which the variance is requested; and

(vi) The FMP number(s) for which the variance is requested, if applicable.

(2) A request for a variance must be submitted as a separate document from any plans or applications. A request for a variance that is submitted as part of a master development plan, application for permit to drill, right-of-way application, or application for approval of other types of operations, rather than submitted separately, will not be considered. Approval of a plan or application that contains a request for a variance does not constitute approval of the variance. A separate request for a variance may be submitted simultaneously with a plan or application. For plans or applications that are contingent upon the approval of the variance request, the BLM encourages the simultaneous submission of the variance request and the plan or application.

(3) The party requesting the variance must submit a Form 3160–5, Sundry Notices and Reports on Wells (Sundry Notice) electronically to the BLM office having jurisdiction over the lease, unit, or CA, using WIS, unless the submitter:

(i) Is a small business, as defined by the U.S. Small Business Administration; and

(ii) Does not have access to the internet.

(4) The AO, after considering all relevant factors, may approve the variance, or approve it with COAs, only if the AO determines that:

(i) The proposed alternative means of compliance meets or exceeds the objectives of the applicable requirement(s) of the regulation;

(ii) Approving the variance will not adversely affect royalty income and production accountability; and

(iii) Issuing the variance is consistent with maximum ultimate economic recovery, as defined in 43 CFR 3160.0–5.

(5) The decision whether to grant or deny the variance request is entirely within the BLM's discretion.

(6) A variance from the requirements of a regulation in this part does not constitute a variance from provisions of other regulations, including Onshore Oil and Gas Orders.

(b) The BLM reserves the right to rescind a variance or modify any COA of a variance due to changes in Federal law, technology, regulation, BLM policy, field operations, noncompliance, or other reasons. The BLM will provide a written justification if it rescinds a variance or modifies a COA.

(c) The procedures for requesting and granting a variance under this section must not be used as an avenue for approving new measurement technology, methods, or equipment. Approval of alternative oil and gas measurement equipment or methods must be obtained through the PMT, following the requirements under § 3170.30.

§ 3170.50 Required recordkeeping, records retention, and records submission.

(a) Lessees, operators, purchasers, transporters, and any other person

directly involved in producing, transporting, purchasing, selling, or measuring oil or gas through the point of royalty measurement or the point of first sale, whichever is later, must retain all records, including source records, that are relevant to determining the quality, quantity, disposition, and verification of production attributable to Federal or Indian leases for the periods prescribed in paragraphs (c) through (e) of this section.

(b) This retention requirement applies to records generated during or for the period for which the lessee or operator has an interest in or conducted operations on the lease, or in which a person is involved in transporting, purchasing, or selling production from the lease.

(c) For Federal leases, and units or CAs that include Federal leases, but do not include Indian leases, the record holder must maintain records for:

(1) Seven years after the records are generated; unless,

(2) A judicial proceeding or demand involving such records is timely commenced, in which case the record holder must maintain such records until the final nonappealable decision in such judicial proceeding is made, or with respect to that demand is rendered, unless the Secretary or their designee or the applicable delegated State authorizes in writing an earlier release of the requirement to maintain such records.

(d) For Indian leases, and units or CAs that include Indian leases, but do not include Federal leases, the record holder must maintain records for:

(1) Six years after the records are generated; unless,

(2) The Secretary or their designee notifies the record holder that the Department of the Interior has initiated or is participating in an audit or investigation involving such records, in which case the record holder must maintain such records until the Secretary or their designee releases the record holder from the obligation to maintain the records.

(e) For units and communitized areas that include both Federal and Indian leases, 6 years after the records are generated. If the Secretary or their designee has notified the record holder within those 6 years that an audit or investigation involving such records has been initiated, then:

(1) If a judicial proceeding or demand is commenced within 7 years after the records are generated, the record holder must retain all records regarding production from the lease, unit PA, or CA until the final nonappealable decision in such judicial proceeding is made, or with respect to that demand is rendered, unless the Secretary or their designee authorizes in writing a release of the requirement to maintain such records before a final nonappealable decision is made or rendered.

(2) If a judicial proceeding or demand is not commenced within 7 years after the records are generated, the record holder must retain all records regarding production from the unit or communitized area until the Secretary or their designee releases the record holder from the obligation to maintain the records;

(f) The lessee, operator, purchaser, or transporter must maintain an audit trail.

(g) All records, including source records, that are used to determine quality, quantity, disposition, and verification of production attributable to a Federal or Indian lease, unit PA, or CA, must include the FMP number or the lease, unit PA, or CA number, land description along with a unique equipment identifier (*e.g.,* a unique tank identification number and meter ID), and the name of the company that created the record. For all facilities existing prior to the assignment of an FMP number, all records must include the following information:

(1) The name of the operator;

(2) The lease, unit PA, or CA number;

(3) The well or facility name and number; and

(4) Land description.

(h) Upon request of the AO, the operator, purchaser, or transporter must provide such records to the AO as may be required by regulation, written order, Onshore Order, NTL, or COA.

(i) All records must be legible.

(j) All records requiring a signature must also have the signer's printed name.

§ 3170.60 Appeal procedures.

(a) BLM decisions, orders, assessments, or other actions under the regulations in this part are administratively appealable under the procedures prescribed in 43 CFR 3165.3(b), 3165.4, and part 4.

(b) For any recommendation made by the PMT, and approved by the BLM, a party affected by such recommendation may file a request for discretionary review by the Assistant Secretary for Land and Minerals Management. The Assistant Secretary may delegate this review function as they deem appropriate, in which case the affected party's application for discretionary review must be made to the person or persons to whom the Assistant Secretary's review function has been delegated.

§ 3170.70 Enforcement.

Noncompliance with any of the requirements of this part or any order issued under this part may result in enforcement actions under 43 CFR subpart 3163 or any other remedy available under applicable law or regulation.

■ 3. Revise subpart 3173 to read as follows:

Subpart 3173—Requirements for Site Security and Production Handling

Sec.

3173.10 Definitions and acronyms.
3173.20 Storage and sales facilities—seals.
3173.21 Oil measurement system components—seals.
3173.22 Federal seals.
3173.30 Removing production from tanks for sale and transportation by truck.
3173.31 Water-draining operations.
3173.32 Hot oiling, clean-up, and completion operations.
3173.40 Report of theft or mishandling of production.
3173.41 Required recordkeeping for inventory and seal records.
3173.43 Data submission and notification requirements.
3173.50 Site facility diagram.
3173.60 Applying for a facility measurement point number.
3173.61 Requirements for approved facility measurement points.
3173.70 Conditions for commingling and allocation approval (surface and downhole).
3173.71 Applying for a commingling and allocation approval.
3173.72 Existing commingling and allocation approvals.
3173.73 Relationship of a commingling and allocation approval to royalty-free use of production.
3173.74 Modification of a commingling and allocation approval.
3173.75 Effective date of a commingling and allocation approval.
3173.76 Terminating a commingling and allocation approval.
3173.80 Combining production downhole in certain circumstances.
3173.90 Requirements for off-lease measurement.
3173.91 Applying for off-lease measurement.
3173.92 Effective date of an off-lease measurement approval.
3173.93 Existing approved off-lease measurement.
3173.94 Relationship of off-lease measurement approval to royalty-free use of production.
3173.95 Termination of off-lease measurement approval.
3173.96 Instances not constituting off-lease measurement, for which no approval is required.
3173.190 Immediate assessments for certain violations.
Appendix A to Subpart 3173—Examples of Site Facility Diagrams

Subpart 3173—Requirements for Site Security and Production Handling

§ 3173.10 Definitions and acronyms.

(a) As used in this subpart, the term:

Access means the ability to:

(i) Add liquids to or remove liquids from any tank or piping system, through a valve or combination of valves or by moving liquids from one tank to another tank; or

(ii) Enter any component in a measuring system affecting the accuracy of the measurement of the quality or quantity of the liquid being measured.

Appropriate valves means those valves that provide access to production before it is measured for sales and that are subject to the sealing requirements of this subpart.

Authorized representative (AR) has the same meaning as defined in 43 CFR 3160.0–5.

Business day means any day Monday through Friday, excluding Federal holidays.

Commingling and allocation approval (CAA) means a formal allocation agreement to combine production from two or more sources (leases, unit PAs, CAs, or non-Federal or non-Indian properties) before that product reaches an FMP.

Completed means when oil or gas is first produced through wellhead equipment from the ultimate producing interval after casing has been run.

Economically marginal property means a lease, unit PA, or CA—

(i) For which:

(A) The expected revenue (minus any associated operating costs) generated from crude-oil or natural-gas production volumes on that property is not sufficient to cover the cost of the capital expenditures based on the least expensive practicable alternative average cost to construct facilities typical for the area required to achieve measurement of non-commingled production of oil or gas from that property over a payout period of 18 months; or

(B) The royalty net present value (RNPV) is less than the cost of the capital expenditures for the least expensive, practicable alternative required to achieve measurement of non-commingled production of oil or gas from that property.

(ii) Both the payout period and the RNPV are determined separately for each lease, unit PA, or CA oil or gas FMP. Oil FMPs are evaluated using estimated revenue (minus taxes and operating costs) from crude oil production, as defined in this section, while gas FMPs are evaluated using estimated revenue (minus taxes and operating costs) from natural gas production, as defined in this section.

Effectively sealed means the placement of a seal in such a manner that the sealed component cannot be accessed, moved, or altered without breaking the seal.

Free water means the measured volume of water that is present in a container and that is not in suspension in the contained liquid at observed temperature.

Maximum ultimate economic recovery has the same meaning as defined in 43 CFR 3160.0–5.

Mishandling means failing to measure or account for removal of production from a facility.

Payout period means the time required, in months, for the cost of an investment in an oil or gas FMP for a specific lease, unit PA, or CA to be covered by the nominal revenue earned from crude oil production, for an oil FMP, or natural gas production, for a gas FMP, minus taxes, royalties, and any operating and variable costs. The payout period is determined separately for each oil or gas FMP for a given lease, unit PA, or CA.

Piping means a tubular system (*e.g.,* metallic, plastic, fiberglass, or rubber) used to move fluids (liquids and gases).

Production phase means that event during which oil is delivered directly to or through production equipment to the storage facilities and includes all operations at the facility other than those defined by the sales phase.

Propagation of uncertainty, in statistics, means the effect of variables' uncertainties on the uncertainty of a function based on those variables.

Royalty Net Present Value (RNPV) means the net present value of all Federal or Indian royalties paid on revenue earned from crude oil production or natural gas production from an oil or gas FMP for a given lease, unit PA, or CA over the expected life of metering equipment that must be installed for that lease, unit PA, or CA to achieve non-commingled measurement.

Sales phase means that event during which oil is removed from storage facilities for sale at an FMP.

Seal means a uniquely numbered device that completely secures either a valve or those components of a measuring system that affect the quality or quantity of the oil being measured.

(b) As used in this subpart, the following additional acronyms apply:

BIA means the Bureau of Indian Affairs.

BMP means Best Management Practice.

§ 3173.20 Storage and sales facilities—seals.

(a) All lines entering or leaving any oil storage tank must have valves capable of being effectively sealed during the production and sales phases unless otherwise provided under this subpart. Appropriate valves must be in an operable condition and accurately reflect whether the valve is open or closed. During the production phase, all appropriate valves that allow unmeasured production to be removed from storage must be effectively sealed in the closed position. During any other phase (sales, water drain, or hot oiling), and prior to taking the top tank gauge measurement, all appropriate valves that allow unmeasured production to enter or leave the sales tank must be effectively sealed in the closed position (see appendix A to subpart 3173). Each unsealed or ineffectively sealed appropriate valve is a separate violation.

(b) Valves or combinations of valves and tanks that provide access to the production before it is measured for sales are considered appropriate valves and are subject to the seal requirements of this subpart (see Appendix A to subpart 3173). If there is more than one valve on a line from a tank, the valve closest to the tank must be sealed. All appropriate valves must be in an operable condition and accurately reflect whether the valve is open or closed.

(c) The following are not considered appropriate valves and are not subject to the sealing requirements of this subpart:

(1) Valves on production equipment (*e.g.,* separator, dehydrator, gun barrel, or wash tank);

(2) Valves on water tanks, provided that the possibility of access to production in the sales and storage tanks does not exist through a common circulating, drain, overflow, or equalizer system;

(3) Valves on tanks that contain oil that has been determined by the AO or AR to be waste or slop oil;

(4) Sample cock valves used on piping or tanks with a Nominal Pipe Size of 1 inch or less in diameter;

(5) Fill-line valves during shipment when a single tank with a nominal capacity of 500 barrels (bbl) or less is used for collecting marginal production of oil produced from a single well (*i.e.,* production that is less than 3 bbl per day). All other seal requirements of this subpart apply;

(6) Gas line valves used on piping with a Nominal Pipe Size of 1 inch or less used as tank bottom ''roll'' lines, provided there is no access to the contents of the storage tank and the roll lines cannot be used as equalizer lines;

(7) Valves on tank heating systems that use a fluid other than the contents of the storage tank (*i.e.,* steam, water, or glycol);

(8) Valves used on piping with a Nominal Pipe Size of 1 inch or less connected directly to the pump body or used on pump bleed off lines;

(9) Tank vent-line valves; and

(10) Sales, equalizer, or fill-line valves on systems where production may be removed only through approved oil metering systems (*e.g.,* LACT or CMS). However, any valve that allows access for removing oil before it is measured through the metering system must be effectively sealed (see appendix A to subpart 3173).

(d) Tampering with any appropriate valve is prohibited. Tampering with an appropriate valve may result in an assessment of civil penalties under 30 U.S.C. 1719 and 43 CFR 3163.2 for knowingly or willfully preparing, maintaining, or submitting false, inaccurate, or misleading reports, records, or written information, or knowingly or willfully taking, removing, transporting, using, or diverting oil or gas from a lease site without valid legal authority, together with any other remedies provided by law.

§ 3173.21 Oil measurement system components—seals.

(a) Components used for quantity or quality determination of oil must be effectively sealed to indicate tampering. Such components include, but are not limited to, the following components of LACT meters (see §§ 3174.101 through 3174.108) and CMSs (see § 3174.130):

(1) Sampler volume control;

(2) All valves on lines entering or leaving the sample container, excluding the safety pop-off valve (if so equipped). Each valve must be sealed in the open or closed position, as appropriate;

(3) Mechanical counter head (totalizer) and meter head;

(4) Stand-alone temperature averager monitor;

(5) Non-automatic adjusting, fixed, back pressure valve pressure adjustment downstream of the meter;

(6) Any drain valves larger than 1 inch in nominal diameter in the system; and

(7) Right-angle drive.

(b) Each missing or ineffectively sealed component is a separate violation.

§ 3173.22 Federal seals.

(a) In addition to any INC issued for a seal violation, the AO or AR may place one or more Federal seals on any appropriate valve, sealing device, or oil-metering-system component that does not comply with the requirements in §§ 3173.2 and 3173.3 if the operator is not present, refuses to cooperate with the AO or AR, or is unable to correct the noncompliance.

(b) The placement of a Federal seal does not constitute compliance with the requirements of §§ 3173.20 and 3173.21.

(c) A Federal seal may not be removed without the approval of the AO or AR.

§ 3173.30 Removing production from tanks for sale and transportation by truck.

(a) When a single truckload constitutes a completed sale, the driver must possess documentation containing the information required in § 3174.161(a) or § 3174.162.

(b) When multiple truckloads are involved in a sale and the oil measurement method is based on the difference between the opening and closing gauges, the driver of the last truck must possess the documentation containing the information required in § 3174.161(a) or § 3174.162. All other drivers involved in the sale must possess a trip log or manifest.

(c) After the seals have been broken, the purchaser or transporter is responsible for the entire contents of the tank until it is resealed.

§ 3173.31 Water-draining operations.

When water is drained from a production storage tank, the operator, purchaser, or transporter, as appropriate, must document the information as required in § 3173.41(b).

§ 3173.32 Hot oiling, clean-up, and completion operations.

(a) During hot oil, clean-up, or completion operations, or any other situation where the operator removes oil from storage, temporarily uses it for operational purposes, and then returns it to storage on the same lease, unit PA, or communitized area, the operator must document the following information:

(1) Federal or Indian lease, unit PA, or CA number(s);

(2) Tank location by land description;

(3) Unique tank number and nominal capacity;

(4) Date of the opening gauge;

(5) Opening gauge measurement (gauged manually or automatically) to the nearest ½ inch;

(6) Unique identifying number of each seal removed;

(7) Closing gauge measurement (gauged manually or automatically) to the nearest ½ inch;

(8) Unique identifying number of each seal installed;

(9) How the oil was used; and

(10) Where the oil was used (*i.e.,* well or facility name and number).

(b) During hot oiling, line flushing, or completion operations or any other situation where the operator removes production from storage for use on a different lease, unit PA, or communtized area, the production is considered sold and must be measured in accordance with the applicable requirements of this subpart and reported as sold to ONRR on the OGOR under 30 CFR part 1210 subpart C for the period covering the production in question.

§ 3173.40 Report of theft or mishandling of production.

(a) No later than the next business day after discovery of an incident of apparent theft or mishandling of production, the operator, purchaser, or transporter must report the incident to the AO. All oral reports must be followed up with a written incident report within 10 business days of the oral report.

(b) The incident report must include the following information:

(1) Company name and name of the person reporting the incident;

(2) Lease, unit PA, or CA number, well or facility name and number, and FMP number, as appropriate;

(3) Land description of the facility location where the incident occurred;

(4) The estimated volume of production removed;

(5) The manner in which access was obtained to the production or how the mishandling occurred;

(6) The name of the person who discovered the incident;

(7) The date and time of the discovery of the incident; and

(8) Whether the incident was reported to local law enforcement agencies and/or company security.

§ 3173.41 Required recordkeeping for inventory and seal records.

(a) The operator must perform an end-of-month inventory (gauged manually or automatically) that records: TOV in storage (measured to the nearest ½ inch) subtracting free water, the volume not corrected for temperature/S&W, and the volume as reported to ONRR on the OGOR;

(1) The end-of-month inventory must be completed within ± 3 days of the last day of the calendar month; or

(2) The end of month inventory must be a calculated ''end of month'' inventory based on daily production that takes place between two measured inventories that are not more than 31, nor fewer than 20, days apart. The calculated monthly inventory is determined based on the following equation:

$$\{[(X + Y - W) / Z1] * Z2\} + X = A,$$

where:

A = calculated end of month inventory;
W = first inventory measurement;
X = second inventory measurement;
Y = gross sales volume between the first and second inventory;
Z1 = number of actual days produced between the first and second inventory; and
Z2 = number of actual days produced between the second inventory and end of calendar month for which the OGOR report is due.

For example: If the first inventory measurement performed on January 12 is 125 bbl, the second inventory measurement performed on February 10 is 150 bbl, the gross sales volume between the first and second inventory is 198 bbl, and February is the calendar month for which the report is due. For purposes of this example, we assume February had 28 days and that the well was non-producing for two of those days.

{[(150 bbl + 198 bbl − 125 bbl)/29 days] * 16 days} + 150 bbl = 273 bbl for the February end-of-month inventory.

(b) For each seal, the operator must maintain a record that includes:

(1) The unique identifying number of each seal and the valve or meter component on which the seal is or was used;

(2) The date of installation or removal of each seal;

(3) For valves, the position (open or closed) in which it was sealed; and

(4) The reason the seal was removed.

§ 3173.43 Data submission and notification requirements.

(a) The operator must submit a Form 3160–5, Sundry Notices and Reports on Wells (Sundry Notice) for the following:

(1) Site facility diagrams (see § 3173.50);

(2) Request for an FMP number (see § 3173.60);

(3) Request for FMP amendments (see § 3173.61(b));

(4) Requests for approval of off-lease measurement (see § 3173.91);

(5) Request to amend an approval of off-lease measurement (see § 3173.91(k));

(6) Requests for approval of CAAs (see § 3173.71); and

(7) Request to modify a CAA (see § 3173.74).

(b) The operator must submit all Sundry Notices electronically to the BLM office having jurisdiction over the lease, unit, or CA using WIS, unless the submitter:

(1) Is a small business, as defined by the U.S. Small Business Administration; and

(2) Does not have access to the internet.

§ 3173.50 Site facility diagram.

(a) A site facility diagram is required for all facilities.

(b) Except for the requirement to submit a Form 3160–5, Sundry Notice, with the site facility diagram, no format is prescribed for site facility diagrams. The diagram should be formatted to fit on an 8½″ by 11″ sheet of paper, if possible, and must be legible and comprehensible to an individual with an ordinary working knowledge of oil field operations (see appendix A to subpart 3173). If more than one page is required, each page must be numbered (in the format ''N of X pages'').

(c) The diagram must:

(1) Reflect the position of the production and water recovery equipment, piping for oil, gas, and water, and metering or other measuring systems in relation to each other, but need not be to scale;

(2) Commencing with the header, identify all of the equipment, including, but not limited to, the header, wellhead, piping, tanks, and metering systems located on the site, and include the appropriate valves and any other equipment used in the handling, conditioning, or disposal of production and water, and indicate the direction of flow;

(3) Identify by the complete US well number the wells flowing into headers;

(4) If another operator operates a co-located facility, the operator must identify the co-operator by name on the diagram and identify with a box on the diagram the approximate location of the co-located facility;

(5) Indicate which valve(s) must be sealed and in what position during the production and sales phases and during other production activities (*e.g.,* circulating tanks or drawing off water), which may be shown by an attachment, if necessary;

(6) For storage facilities common to co-located facilities operated by one operator, one diagram is sufficient;

(7) Clearly identify the lease, unit PA, or CA to which the diagram applies, the land description of the facility, and the name of the company submitting the diagram, and any co-located facilities;

(8) Clearly identify, on the diagram or as an attachment, all meters and measurement equipment. Specifically identify all assigned FMP numbers or the unique identifiers or station ID numbers of the measurement equipment used for royalty reporting; and

(9) If the operator claims royalty-free use, clearly identify the equipment for which the operator claims royalty-free use. The operator must either:

(i) For each engine, motor, or major component (*e.g.,* compressor, separator, dehydrator, heater-treater, or tank heater) powered by production from the lease, unit PA, or CA, state the volume (oil or gas) consumed (per day or per month) and how the volume is determined; or

(ii) Measure the volume used, by meter or tank gauge.

(d) The operator must submit a new site facility diagram as follows:

(1) For new, permanent facilities that become operational after [EFFECTIVE DATE OF FINAL RULE], a site facility diagram within 60 days after the facility becomes operational; or

(2) For a facility that is in service on or before [EFFECTIVE DATE OF FINAL RULE], and that has a site facility diagram on file with the BLM that meets the minimum requirements of Onshore Oil and Gas Order 3, Site Security, an amended site facility diagram meeting the requirements of this section is not due until 60 days after the existing facility is modified, or a non-Federal facility located on a Federal lease or federally approved unit or communitized area is constructed or modified.

(e) After a site facility diagram has been submitted that complies with the requirements of this part, the current operator has an ongoing obligation to update and amend the diagram within 60 days after such facility is modified or, a non-Federal facility located on a Federal lease or federally approved unit or communitized area is constructed or modified.

§ 3173.60 Applying for a facility measurement point number.

(a) The operator must submit separate applications for approval of an FMP number that measures oil produced from a lease, unit PA, or CA, gas storage agreement involving native gas or oil, or under a CAA that complies with the requirements of this subpart, and an FMP number that measures gas produced from the same lease, unit PA, or CA, or under a CAA that complies with the requirements of this subpart. This requirement applies even if the measurement equipment or facilities are at the same location.

(b) For a permanent measurement facility that comes into service after [EFFECTIVE DATE OF FINAL RULE], the operator must apply for approval of the FMP number before any production leaves the permanent measurement facility. This requirement does not apply to measurement equipment at any temporary measurement facility used

during well-testing operations. After timely submission and prior to approval of an FMP number request, an operator must use the lease, unit PA, or CA number for reporting production to ONRR, until the BLM assigns an FMP number, at which point the operator must use the FMP number for all reporting to ONRR as set forth in § 3173.61.

(c) For a permanent measurement facility in service on or before [EFFECTIVE DATE OF FINAL RULE], the operator must apply for BLM approval of an FMP number within the time prescribed in this paragraph, based on the production level of any one of the leases, unit PAs, or CAs, whether or not they are part of a CAA. The deadline to apply for an FMP number approval applies to both oil and gas measurement facilities measuring production from that lease, unit PA, or CA.

(1) For a stand-alone lease, unit PA, or CA that produced 4,500 Mcf or more of gas per month or 500 bbl or more of oil per month, the deadline is [DATE ONE YEAR AFTER EFFECTIVE DATE OF FINAL RULE].

(2) For a stand-alone lease, unit PA, or CA that produced 1,000 Mcf or more, but less than 4,500 Mcf of gas per month, or 50 bbl or more, but less than 500 bbl of oil per month, the deadline is [DATE TWO YEARS AFTER EFFECTIVE DATE OF FINAL RULE].

(3) For a stand-alone lease, unit PA, or CA that produced less than 1,000 Mcf of gas per month or less than 50 bbl of oil per month, the deadline is [DATE THREE YEARS AFTER THE EFFECTIVE DATE OF THE FINAL RULE].

(4) For a stand-alone lease, unit PA, or CA that has not produced for a year or more before [EFFECTIVE DATE OF FINAL RULE], the operator must apply for an FMP number prior to the resumption of production.

(5) The production levels identified in paragraphs (d)(1) through (3) of this section should be calculated using the average production of oil or gas over the 12 months preceding the effective date of this section or over the period the lease, unit PA, or CA has been in production, whichever is shorter.

(6) If the operator of any facility covered by this section applies for an FMP number approval by the deadline in this paragraph, the operator may continue using the lease, unit PA, or CA number for reporting production to ONRR, until the BLM assigns an FMP number, at which point the operator must use the FMP number for all reporting to ONRR as set forth in § 3173.61.

(d) All requests for FMP number approval must include the following:

(1) A complete Sundry Notice requesting approval of each FMP; and

(2) Information about the equipment used for oil and gas measurement, including, for:

(i) ''Gas measurement,'' specify the name of the operator/purchaser/transporter, as appropriate, the unique meter identification, and elevation;

(ii) ''Oil measurement by tank gauge,'' specify name of the operator/purchaser/transporter, as appropriate, and the oil tank number or tank serial number and size in barrels or gallons for all tanks associated with measurement at an FMP; and

(iii) ''Oil measurement by LACT or CMS,'' specify the name of operator/purchaser/transporter, as appropriate, and unique meter identification;

(3) Where production from more than one well will flow to the requested FMP, list the US well numbers associated with the FMP; and

(4) FMP location by land description.

(f) A request for approval of an FMP number may be submitted simultaneously with separate requests for off-lease measurement and/or CAA.

§ 3173.61 Requirements for approved facility measurement points.

(a) An operator must start reporting production to ONRR on its OGOR using an FMP number for the third production month after the BLM assigns the FMP number(s), and every month thereafter. (For example, for a facility that is assigned an FMP number on January 15, 2021, the effective date of the FMP is the April 2021 production report.)

(b)(1) The operator must file a Sundry Notice that describes any changes or modifications made to the FMP within 30 days after the change. This requirement does not apply to temporary modifications (*e.g.,* for maintenance purposes). These include any changes and modifications to the information listed on an application submitted under § 3173.60.

(2) The Sundry Notice must specify what was changed and the effective date, and include, if appropriate, an amended site facility diagram (see § 3173.50).

§ 3173.70 Conditions for commingling and allocation approval (surface and downhole).

(a) Subject to the exceptions provided in paragraph (b) of this section, the BLM may grant a CAA only if the proposed allocation method used for commingled measurement does not have the potential to affect the determination of the total quantity or quality of production on which royalty is owed. All the Federal or Indian leases, unit Pas, or CAs proposed for commingling must meet the following conditions:

(1) The proposed commingling includes production from more than one:

(i) Federal lease, unit PA, or CA, where each lease, unit PA, or CA proposed for commingling has 100 percent Federal mineral interest, and the same fixed royalty rate;

(ii) Indian tribal lease, unit PA, or CA, where each lease, unit PA, or CA proposed for commingling is wholly owned by the same tribe and has the same fixed royalty rate;

(iii) Federal unit PA or CA, where each unit PA, or CA proposed for commingling has the same proportion of Federal interest, and each interest is subject to the same fixed royalty rate. (For example, the BLM could approve a commingling request under this paragraph where an operator proposes to commingle two Federal CAs of mixed ownership and both CAs are 50 percent Federal and 50 percent private, so long as the Federal interests have the same royalty rates.); or

(iv) Indian unit PA or CA, where each unit PA or CA proposed for commingling has the same proportion of Indian interests, and each interest is held by the same tribe and has the same fixed royalty rate;

(2) The operator or operators provide a methodology acceptable to the BLM for allocation among the leases or agreements from which production is to be commingled, with a signed agreement if there is more than one operator.

(3) The applicant demonstrates to the AO that each lease, unit PA, or CA proposed for inclusion in the CAA is producing in paying quantities (or, in the case of Federal leases, capable of production in paying quantities) pending approval of the CAA, or the applicant demonstrates to the AO that a lease, unit PA, or CA proposed for inclusion in the CAA has an approved Application for Permit to Drill.

(b) The BLM may also approve a CAA in instances where the proposed commingling of production involves production from Federal or Indian leases, unit PAs, or CAs that do not meet the criteria of paragraph (a)(1) of this section (*e.g.,* the commingling of leases, unit PAs, or CAs with different royalty rates, or where the commingling involves multiple mineral ownerships). In order to be approved, a CAA under this paragraph must meet the requirements of paragraphs (a)(2) through (3) of this section and at least one of the following conditions must be met:

(1) The Federal or Indian lease, unit PA, or CA meets the definition of an economically marginal property.

However, if the BLM determines that the economically marginal Federal or Indian lease, unit PA, or CA included in a CAA ceases to be an economically marginal property, then this condition is no longer met;

(2) The average monthly production over the preceding 12 months for each Federal or Indian lease, unit PA, or CA proposed for the CAA on an individual basis is less than 6,000 Mcf of gas per month, or 1,000 bbl of oil per month;

(3) A CAA that includes Indian leases, unit PAs, or CAs has been authorized under tribal law or otherwise approved by a tribe;

(4) The CAA covers the downhole commingling of production from multiple formations that are covered by separate leases, unit PAs, or CAs, where the BLM has determined that the proposed commingling from those formations is an acceptable practice for the purpose of achieving maximum ultimate economic recovery and resource conservation;

(5) The applicant must provide an overall allocation uncertainty analysis calculated by using propagation of uncertainty method of the Federal or Indian mineral interest percentage for each lease, unit PA, or CA proposed for commingling which meets the following criteria:

(i) Overall allocation uncertainty analysis must meet the performance goals in § 3174.31 or § 3175.31;

(ii) The analysis must show no allocation bias as a result of commingling allocation;

(iii) The analysis must state what the assumed underlying distribution is of the volumes generated in the analysis and support the use of the underlying distribution assumption; and

(iv) The analysis must be limited to four leases, unit PAs, or CAs proposed for commingling approval.

(6) There are overriding considerations that indicate the BLM should approve a commingling application in the public interest, notwithstanding potential negative royalty impacts from the allocation method. Such considerations could include topographic or environmental considerations that make non-commingled measurement physically impractical or undesirable, in view of where additional measurement and related equipment necessary to achieve non-commingled measurement would have to be located.

§ 3173.71 Applying for a commingling and allocation approval.

To apply for a CAA, the applicant must submit the following, if applicable, to the BLM office having jurisdiction over the leases, unit PAs, or CAs from which production is proposed to be commingled:

(a) A completed Sundry Notice requesting approval of commingling and allocation of either oil or gas;

(b) A completed Sundry Notice for approval of off-lease measurement under § 3173.91, if any of the proposed FMPs are outside the boundaries of any of the leases, units, or CAs from which production would be commingled. The Sundry Notice for off-lease measurement approval must be submitted simultaneously with the Sundry Notice requesting commingling approval;

(c) A proposed allocation agreement, including a proposed allocation methodology, with an example of how the methodology would be applied, signed by each operator of each of the leases, unit PAs, or CAs from which production would be included in the CAA;

(d) A list of all Federal or Indian lease, unit PA, or CA numbers in the proposed CAA, specifying the type of production (*i.e.,* oil or gas) for which commingling is requested;

(e) A map or maps (topographic map, if applying under § 3173.70(b)(6)) of appropriate scale showing the following:

(1) The boundaries of all the leases, units, unit PAs, or communitized areas whose production is proposed to be commingled; and

(2) The location of existing or planned facilities and the relative location of all wellheads (including the US well number) and piping included in the CAA, and existing FMPs or FMPs proposed to be installed to the extent known or anticipated;

(f) An applicant-certified statement of a surface-use plan of operations, if new surface disturbance is proposed for the FMP and its associated facilities are located on BLM-managed land within the boundaries of the leases, units, and communitized areas from which production would be commingled;

(g) An applicant-certified statement of a right-of-way grant approval under 43 CFR part 2880, if the proposed FMP is on a pipeline, or approved under 43 CFR part 2800, if the proposed FMP is a meter or storage tank. This requirement applies only when new surface disturbance is proposed for the FMP, and its associated facilities are located on BLM-managed land outside any of the leases, units, or communitized areas where production would be commingled;

(h) Written approval from the appropriate surface-management agency, if new surface disturbance is proposed for the FMP and its associated facilities are located on Federal land managed by an agency other than the BLM;

(i) An applicant-certified statement of a right-of-way grant approval for the proposed FMP, filed under 25 CFR part 169, with the appropriate BIA office, if any of the proposed surface facilities are on Indian land outside the lease, unit, or communitized area from which the production would be commingled;

(j) Documentation demonstrating that each of the leases, unit PAs, or CAs proposed for inclusion in the CAA is producing in paying quantities (or, in the case of Federal leases, is capable of production in paying quantities) pending approval of the CAA. If the leases are not yet producing, documentation that a lease, unit PA, or CA proposed for inclusion has an approved Application for Permit to Drill, including offset well decline curve data to support projected production volumes presented in the commingling application;

(k) All gas analyses, including Btu content or oil gravities as applicable, for previous periods of production from the leases, units, unit PAs, or communitized areas proposed for inclusion in the CAA, for up to 6 years before the date of the application for approval of the CAA. Gas analysis and oil gravity data is not needed if the CAA falls under paragraph (a)(1) of this section.

§ 3173.72 Existing commingling and allocation approvals.

Upon receipt of an operator's request for assignment of an FMP number to a facility associated with a CAA existing on [EFFECTIVE DATE OF FINAL RULE], the AO will review the existing CAA and take the following action:

(a) The AO will grandfather the existing CAA and associated off-lease measurement, where applicable, if the existing CAA meets one of the following conditions:

(1) The existing CAA involves downhole commingling that includes Federal or Indian leases, unit PAs, or CAs; or

(2) The existing CAA is for surface commingling and the average production rate over the previous 12 months for each Federal or Indian lease, unit PA, and CA included in the CAA is:

(i) Less than 6,000 Mcf per month for gas; or

(ii) Less than 1,000 bbl per month for oil.

(b) If the existing CAA does not meet the conditions of paragraph (a)(1) or (2) of this section, the AO will review the CAA for consistency with the minimum

standards and requirements for a CAA under § 3173.14.

(1) The AO will notify the operator in writing of any inconsistencies or deficiencies with an existing CAA. The operator must correct any inconsistencies or deficiencies that the AO identifies, provide the additional information that the AO has requested, or request an extension of time from the AO, within 20 business days after receipt of the AO's notice. When the AO is satisfied that the operator has corrected any inconsistencies or deficiencies, the AO will terminate the existing CAA and grant a new CAA based on the operator's corrections.

(2) The AO may terminate the existing CAA and grant a new CAA with new or amended COAs to make the approval consistent with the requirements under § 3173.70 in connection with approving the requested FMP. If the operator appeals any COAs of the new CAA, the existing CAA approval will continue in effect during the pendency of the appeal.

(3) If the existing CAA does not meet the standards and requirements of § 3173.70 and the operator does not correct the deficiencies, the AO may terminate the existing CAA under § 3173.76 and deny the request for an FMP number for the facility associated with the existing CAA.

(c) If the AO grants a new CAA to replace an existing CAA under paragraph (b) of this section, the new CAA is effective on the first day of the month following its approval. Any new allocation percentages resulting from the new CAA will apply from the effective date of the CAA forward.

(d) The grandfathering of an existing downhole commingling approval does not constitute a new surface commingling approval or the grandfathering of an associated surface commingling approval.

§ 3173.73 Relationship of a commingling and allocation approval to royalty-free use of production.

A CAA does not constitute approval of off-lease royalty-free use of production as fuel in facilities located at an FMP approved under the CAA.

§ 3173.74 Modification of a commingling and allocation approval.

(a) A CAA must be modified when:

(1) There is a modification to the allocation agreement;

(2) Additional leases, unit PAs, or CAs are proposed for inclusion in the CAA; or

(3) There is permanent production cessation from any of the leases, unit PAs, or CAs within the CAA.

(b) When a CAA was based on projected production quantity and quality and any of the leases, unit PAs, or CAs exceeds the production projections provided by the applicant, then the CAA must be reevaluated and the approval may be rescinded, revised, or COAs modified.

(c) To request a modification of a CAA, all operators must submit to the AO:

(1) A completed Sundry Notice describing the modification requested;

(2) A new allocation methodology, including an allocation methodology and an example of how the methodology is applied, if appropriate; and

(3) Certification by each operator in the CAA that it agrees to the CAA modification.

(d) A change in operator does not trigger the need to modify a CAA.

§ 3173.75 Effective date of a commingling and allocation approval.

(a) If the BLM approves a CAA, the effective date of the CAA is the first day of the month following first production through the FMPs for the CAA.

(b) If the BLM approves a modification, the effective date is the first day of the month following approval of the modification.

(c) A CAA does not modify any of the terms of the leases, units, or CAs covered by the CAA.

§ 3173.76 Terminating a commingling and allocation approval.

(a) The AO may terminate a CAA for any reason, including, but not limited to, the following:

(1) Changes in technology, regulation, or BLM policy;

(2) Operator non-compliance with the terms or COAs of the CAA or this subpart; or

(3) The AO determines that a lease, unit, or CA subject to the CAA has terminated, or a unit PA subject to the CAA has ceased production; or

(4) A CAA was based on projected production quantity and quality and any of the leases, unit PAs, or CAs exceeds the production projections provided by the applicant.

(b) If only one lease, unit PA, or CA remains subject to the CAA, the CAA terminates automatically.

(c) An operator may terminate its participation in a CAA by submitting a Sundry Notice to the BLM. The Sundry Notice must identify the FMP(s) for the lease(s), unit PA(s), or CA(s) previously subject to the CAA. Termination by one operator does not mean the CAA terminates as to all other participating operators, so long as one of the other provisions of this subpart is met and the remaining operators submit a Sundry Notice requesting a new CAA as outlined in paragraph (e) of this section.

(d) The AO will notify in writing all operators who are a party to the CAA of the effective date of the termination and any inconsistencies or deficiencies with their CAA approval that serve as the reason(s) for termination. The operator must correct any inconsistencies or deficiencies that the AO identifies, provide the additional information that the AO has requested, or request an extension of time from the AO, within 20 business days after receipt of the BLM's notice, or the CAA is terminated.

(e) If a CAA is terminated, each lease, unit PA, or CA that was included in the CAA may require a new FMP number(s) or a new CAA. Operators will have 30 days to apply for a new FMP number (§ 3173.12) or CAA (§ 3173.15), if applicable. The existing FMP number may be used for production reporting until a new FMP number is assigned or CAA is approved.

§ 3173.80 Combining production downhole in certain circumstances.

(a)(1) Combining production from a single well completed in different hydrocarbon pools or geologic formations (*e.g.,* a directional well) underlying separate adjacent properties (whether Federal, Indian, State, or private), where none of the hydrocarbon pools or geologic formations underlie or are common to more than one of the respective properties, constitutes commingling for purposes of §§ 3173.70 through 3173.76.

(2) If any of the hydrocarbon pools or geologic formations underlie or are common to more than one of the properties, the operator must establish a unit PA (see 43 CFR part 3180) or CA (see 43 CFR 3105.2–1—3105.2–3), as applicable, rather than applying for a CAA.

(b) Combining production downhole from different geologic formations on the same lease, unit PA, or CA in a single well requires approval of the AO (see 43 CFR 3162.3–2), but it is not considered commingling for production accounting purposes.

§ 3173.90 Requirements for off-lease measurement.

The BLM will consider granting a request for off-lease measurement if the request:

(a) Involves only production from a single lease, unit PA, CA, or CAA;

(b) Provides for accurate production accountability;

(c) Is in the public interest (considering factors such as BMPs,

topographic and environmental conditions that make on-lease measurement physically impractical, and maximum ultimate economic recovery); and

(d) Occurs at an approved FMP. A request for approval of an FMP (see § 3173.12) may be filed concurrently with the request for off-lease measurement.

§ 3173.91 Applying for off-lease measurement.

To apply for approval of off-lease measurement, the operator must submit the following to the BLM office having jurisdiction over the leases, units, or communitized areas:

(a) A completed Sundry Notice, with separate applications for each oil and gas FMP;

(b) Justification for off-lease measurement (considering factors such as BMPs, topographic and environmental issues, and maximum ultimate economic recovery);

(c) A topographic map or maps of appropriate scale showing the following:

(1) The boundary of the lease, unit, unit PA, or communitized area from which the production originates; and

(2) The location of existing or planned facilities and the relative location of all wellheads (including the US well number for each well) and piping included in the off-lease measurement proposal, and existing FMPs or FMPs proposed to be installed to the extent known or anticipated;

(d) The surface ownership of all land on which equipment is, or is proposed to be, located;

(e) If any of the proposed off-lease measurement facilities are located on non-federally owned surface, a written concurrence must be signed by the owner(s) of the surface and the owner(s) of the measurement facilities, including each owner's name, address, and telephone number, granting the BLM unrestricted access to the off-lease measurement facility and the surface on which it is located, for the purpose of inspecting any production, measurement, water handling, or transportation equipment located on the non-Federal surface up to and including the FMP, and for otherwise verifying production accountability. If the ownership of the non-Federal surface or of the measurement facility changes, the operator must obtain and provide to the AO the written concurrence required under this paragraph from the new owner(s) within 30 days of the change in ownership;

(f) An applicant certified statement of a right-of-way grant (Standard Form 299) approved under 43 CFR part 2880, if the proposed off-lease FMP is on a pipeline, or under 43 CFR part 2800, if the proposed off-lease FMP is a meter or storage tank. This requirement applies only when new surface disturbance is proposed for the FMP and its associated facilities are located on BLM-managed land;

(g) An applicant certified statement of a right-of-way grant approval under 25 CFR part 169 with the appropriate BIA office, if any of the proposed surface facilities are on Indian land outside the lease, unit, or communitized area from which the production originated;

(h) Written approval from the appropriate surface-management agency, if new surface disturbance is proposed for the FMP and its associated facilities are located on Federal land managed by an agency other than the BLM;

(i) An application for approval of off-lease royalty-free use (if required under applicable rules), if the operator proposes to use production from the lease, unit, or CA as fuel at the off-lease measurement facility without payment of royalty; and

(j) If the operator is applying for an amendment of an existing approval of off-lease measurement, the operator must submit a completed Sundry Notice required under paragraph (a) of this section, and information required under paragraphs (b) through (j) of this section to the extent the information previously submitted has changed.

§ 3173.92 Effective date of an off-lease measurement approval.

If the BLM approves off-lease measurement, the approval is effective on the date that the approval is issued, unless the approval specifies a different effective date.

§ 3173.93 Existing approved off-lease measurement.

(a) Upon receipt of an operator's request for assignment of an FMP number to a facility associated with an off-lease measurement approval existing on [EFFECTIVE DATE OF FINAL RULE], the AO will review the existing approved off-lease measurement for consistency with the minimum standards and requirements for an off-lease measurement approval under § 3173.22. The AO will notify the operator in writing of any inconsistencies or deficiencies.

(b) The operator must correct any inconsistencies or deficiencies that the AO identifies, provide any additional information the AO requests, or request an extension of time from the AO, within 20 business days after receipt of the AO's notice. The extension request must explain the factors that will prevent the operator from complying within 20 days and provide a timeframe under which the operator can comply.

(c) In connection with approving an FMP application, the AO may terminate the existing off-lease measurement approval and grant a new off-lease measurement approval with new or amended COAs to make the approval consistent with the requirements for off-lease measurement under § 3173.90 in connection with approving the requested FMP. If the operator appeals the new off-lease measurement approval, the existing off-lease measurement approval will continue in effect during the pendency of the appeal.

(d) If the existing off-lease measurement approval does not meet the standards and requirements of § 3173.90 and the operator does not correct the deficiencies, the AO may terminate the existing off-lease measurement approval under § 3173.95 and deny the request for an FMP number for the facility associated with the existing off-lease measurement approval.

(e) If the existing off-lease measurement approval under this section is consistent with the requirements under § 3173.90, then that existing off-lease measurement is grandfathered and will be part of the FMP approval.

(f) If the BLM grants a new off-lease measurement approval to replace an existing off-lease measurement approval, the new approval is effective on the first day of the month following its approval.

§ 3173.94 Relationship of off-lease measurement approval to royalty-free use of production.

Approval of off-lease measurement does not constitute approval of off-lease royalty-free use of production as fuel in facilities located at an FMP approved under the off-lease measurement approval.

§ 3173.95 Termination of off-lease measurement approval.

(a) The BLM may terminate off-lease measurement approval for any reason, including, but not limited to, the following:

(1) Changes in technology, regulation, or BLM policy; or

(2) Operator non-compliance with the terms or conditions of approval of the off-lease measurement approval or §§ 3173.90 through 3173.94.

(b) The BLM will notify the operator in writing of the effective date of the

termination and any inconsistencies or deficiencies with its off-lease measurement approval that serve as the reason(s) for termination. The operator must correct any inconsistencies or deficiencies that the BLM identifies, provide any additional information the AO requests, or request an extension of time from the AO within 20 business days after receipt of the BLM's notice, or the off lease measurement approval terminates on the effective date.

(c) The operator may terminate the off-lease measurement by submitting a Sundry Notice to the BLM. The Sundry Notice must identify the new FMP(s) for the lease(s), unit(s), or CA(s) previously subject to the off-lease measurement approval.

(d) If off-lease measurement is terminated, each lease, unit PA, or CA that was subject to the off-lease measurement approval may require a new FMP number(s) or a new off-lease measurement approval. Operators will have 30 days to apply for a new FMP number or off-lease measurement approval, whichever is applicable. The existing FMP number may be used for production reporting until a new FMP number is assigned or off-lease measurement is approved.

§ 3173.96 Instances not constituting off-lease measurement, for which no approval is required.

(a) If the approved FMP is located on the well pad of a directionally or horizontally drilled well that produces oil and gas from a lease, unit, or communitized area on which the well pad is not located, measurement at the FMP does not constitute off-lease measurement. However, if the FMP is located off of the well pad, regardless of distance, measurement at the FMP constitutes off-lease measurement, and BLM approval is required under §§ 3173.90 through 3173.94.

(b) If a lease, unit, or CA consists of more than one separate tract whose boundaries are not contiguous (*e.g.,* a single lease comprises two or more separate tracts), measurement of production at an FMP located on one of the tracts is not considered to be off-lease measurement if:

(1) The production is moved from one tract within the same lease, unit, or communitized area to another area of the lease, unit, or communitized area on which the FMP is located; and

(2) Production is not diverted during the movement between the tracts before the FMP, except for production used royalty free.

§ 3173.190 Immediate assessments for certain violations.

Certain instances of noncompliance warrant the imposition of immediate assessments upon discovery, as prescribed in the following table. Imposition of these assessments does not preclude other appropriate enforcement actions:

TABLE 1 TO § 3173.190: VIOLATIONS SUBJECT TO AN IMMEDIATE ASSESSMENT

Violation:	Assessment amount per violation:
1. An appropriate valve on an oil storage tank was not effectively sealed, as required by § 3173.20	$1,000
2. A Federal seal is removed without prior approval of the AO or AR, as required by § 3173.22	1,000
3. Oil was not properly measured before removal from storage for use on a different lease, unit, or CA, as required by § 3173.32(b)	1,000
4. An FMP was bypassed, in violation of § 3170.22	1,000
5. Theft or mishandling of production was not reported to the BLM, as required by § 3173.40	1,000
6. Records necessary to determine quantity and quality of production were not retained, as required by § 3170.32	1,000
7. FMP application was not submitted, as required by § 3173.60	1,000
8. (i) For facilities that begin operation after [EFFECTIVE DATE OF FINAL RULE], BLM approval for off-lease measurement was not obtained before removing production, as required by § 3173.91	
(ii) Facilities that were in operation on or before [EFFECTIVE DATE OF FINAL RULE], are subject to an assessment if they do not have an existing BLM approval for off-lease measurement	1,000
9. (i) For facilities that begin operation after [EFFECTIVE DATE OF FINAL RULE], BLM approval for surface commingling was not obtained before removing production, as required by § 3173.71	
(ii) Facilities that were in operation on or before [EFFECTIVE DATE OF FINAL RULE], are subject to an assessment if they do not have an existing BLM approval for surface commingling	1,000
10. (i) For facilities that begin operation after [EFFECTIVE DATE OF FINAL RULE], BLM approval for downhole commingling was not obtained before removing production, as required by § 3173.71	
(ii) Facilities that were in operation on or before [EFFECTIVE DATE OF FINAL RULE], are subject to an assessment if they do not have an existing BLM approval for downhole commingling	1,000

Appendix A to Subpart 3173—Examples of Site Facility Diagrams

I. Diagrams

1. Site Facility Diagrams and Sealing of Valve Introduction

2. Diagrams

Diagrams	Appendix pages	Description
I–A	1–1	Simple gas well without equipment.
I–B	1–2	Simple gas well with equipment.
I–C	1–3 thru 1–5	Single operator with co-located facilities single oil tank, gas, and water storage.
I–D	1–6 and 1–8	Oil sales with multiple oil tanks, gas, and water storage.
I–E	1–9 thru 1–12	Co-located facilities with multiple operators, oil sales by Lease Automatic Custody Transfer (LACT) system, gas, and water storage.
I–F	1–13 thru 1–16	On-lease gas plant, with oil sales by LACT, Liquefied Petroleum Gas (LPG)/Natural Gas Liquids (NGL) sales by LACT, inlet gas, tailgate gas, flared or vented and plant process gas used.

Diagrams	Appendix pages	Description
I–G	1–17 thru 1–19	Enhanced recovery water injection or other water disposal facility.
I–H	1–20 thru 1–22	Pod Facility.
I–I	1–23 thru 1–25	Water recycle system with water disposal options by pipeline or truck.

1. *Site Facility Diagrams and Sealing of Valve Introduction Appendix to 3173* is provided not as a requirement but solely as an example to aid operators, purchasers, and transporters in determining what valves are considered to be ''appropriate valves'' subject to the seal requirements of this proposed rule, and to aid in the preparation of facility diagrams. It is impossible to include every type of equipment that could be used or situation that could occur in production activities. In making the determination of what is an ''appropriate valve,'' the entire facility must be considered as a whole, including the facility size, the equipment type, and the on-going activities at the facility. The signature block, in which a company representative certifies each diagram's accuracy, may be placed directly on the diagram or on a separate piece of paper accompanying the diagram. As shown in this appendix, the signature block may appear in a box or as a line of text.

BILLING CODE 4310–84–P

I-A

Facility Operator/Owner Name: ABC Oil and Gas

Federal/Indian Lease, unit PA, or CA Number: NMNM12345

Land Description: New Mexico Principal Meridian,
T. 36 N., R. 11 W., sec. 2, NW1/4NE1/4

Page 1 of 1

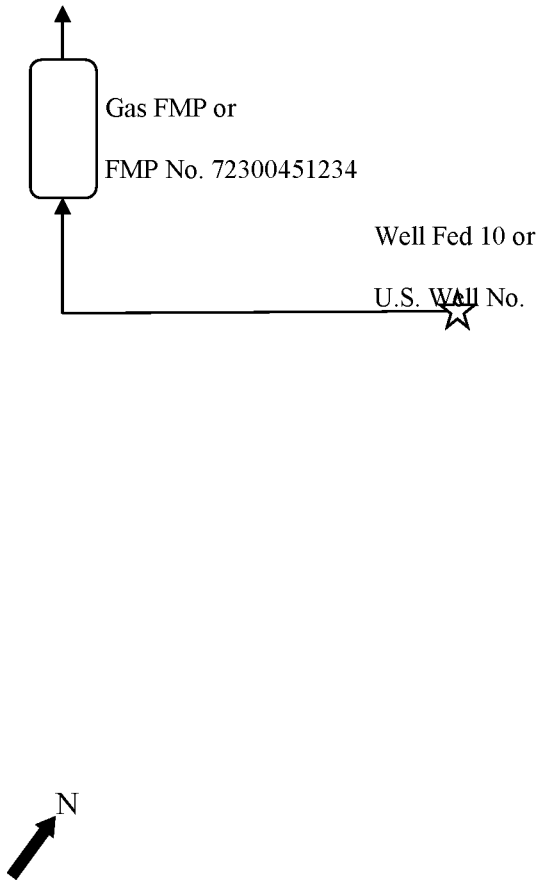

I-B

Facility Operator/Owner Name: ABC Oil and Gas

Federal/Indian Lease, unit PA, or CA Number: NMNM12345

Land Description: New Mexico Principal Meridian,
T. 36 N., R. 11 W., sec. 2, NW1/4NE1/4

Page 1 of 1

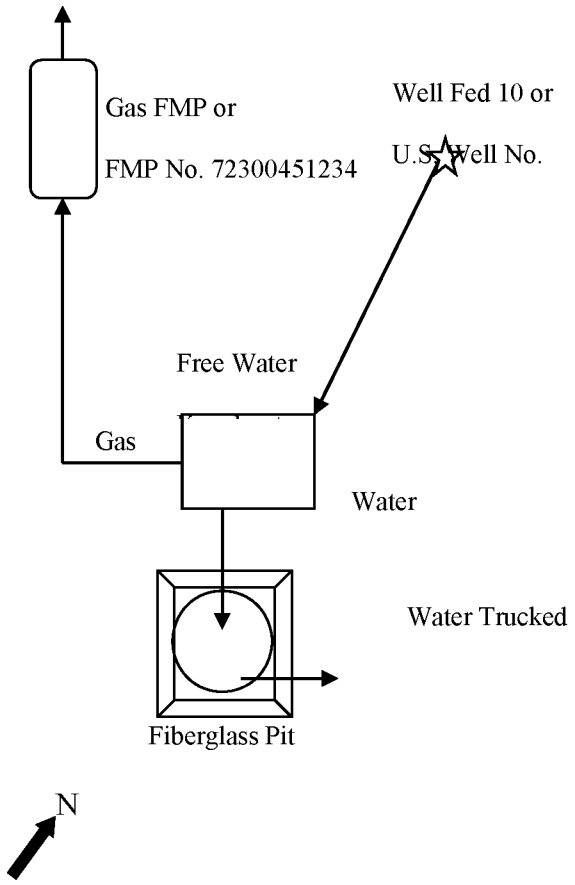

Free Water Knockout Manufacturer: XYZ Equipment
Serial No. F-9876
Gas Usage less than 0.1 Mcf/day

I-C
Page 1 of 3

Facility Operator/Owner Name: ABC Oil and Gas Federal/Indian Lease, unit PA, or CA Number: NMNM12345 and NMNM54
Land Description: New Mexico Principal Meridian, T. 36 N., R. 11 W., sec. 2, NW1/4NE1/4

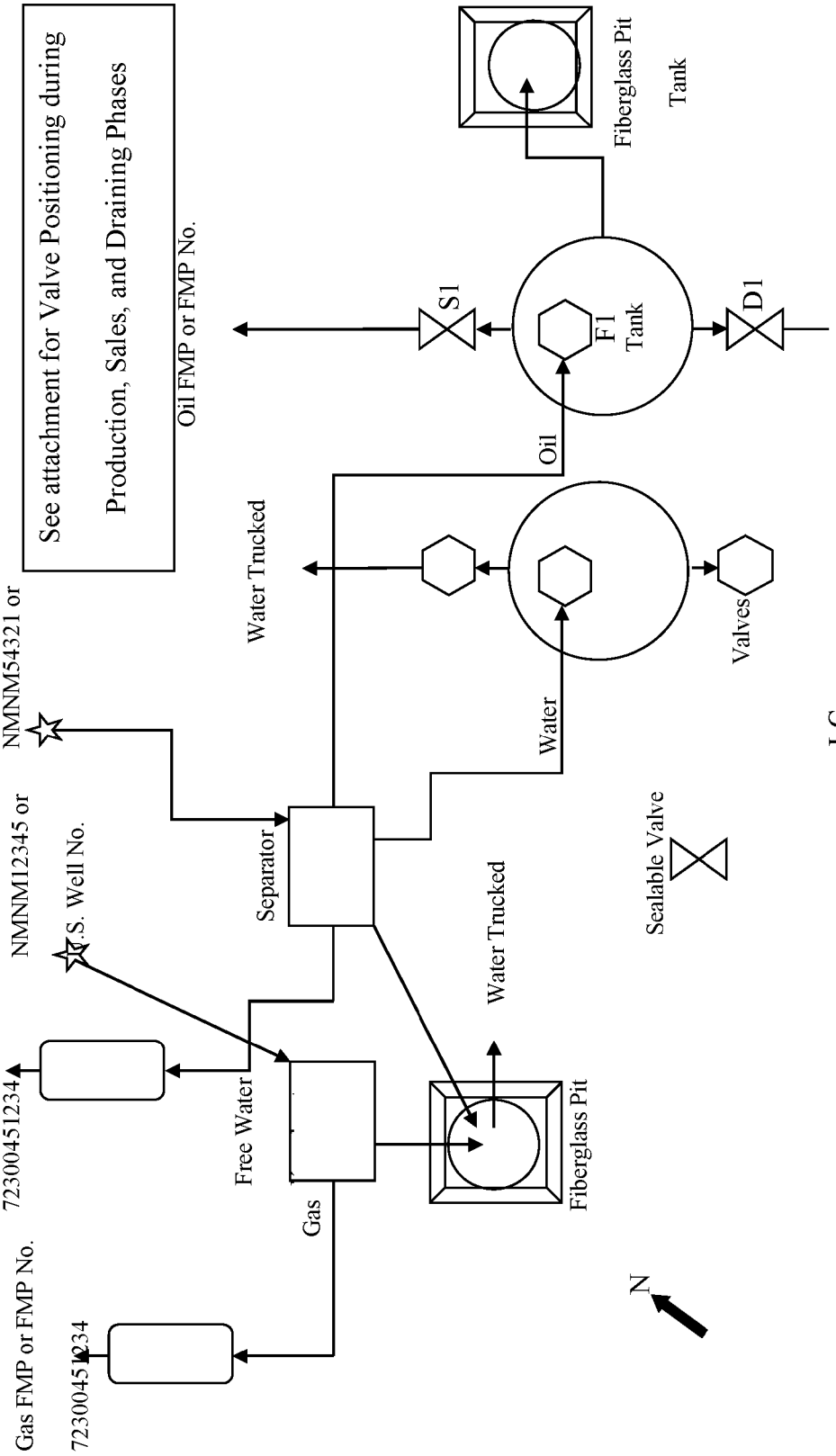

I-C

Appendix

Page 2 of 3

Facility Operator/Owner Name: ABC Oil and Gas Federal/Indian Lease, unit PA, or CA Number: NMNM12345

Land Description: New Mexico Principal Meridian, T. 36 N., R. 11 W., sec. 2, NW1/4NE1/4

Diagram #I-C:
F1 is the Fill Valve
S1 is the Sales Valve
D1 is the Drain Valve

Valve Positioning in the Production Phase
Production into T5678
S1 is Sealed Closed
F1 is Open
D1 is Sealed Closed

Valve Positioning in the Sales Phase for
Sales from T5678
S1 is Open
F1 is Open
D1 is Sealed Closed

Valve Positioning in the Drain Phase for
Draining from T5678
S1 is Sealed Closed
F1 is Open
D1 is Open

Free Water Knockout Manufacturer: XYZ Equipment
Serial No. F-9876

Gas Usage less than 0.1 Mcf/day

I-C
Page 3 of 3

Facility Operator/Owner Name: ABC Oil and Gas Federal/Indian Lease, unit PA, or CA Number: NMNM12345

Land Description: New Mexico Principal Meridian, T. 36 N., R. 11 W., sec. 2, NW1/4NE1/4

Separator Manufacturer: XYZ Equipment
Serial No. F-9876
Fire box rated at 150,000 btu/hour (btu/hr) operated 4 months/year (mo/yr), 20 hours/day (hrs/day)
150,000 btu/hr ÷ 1157 btu/cubic foot (btu/ft^3) (see current gas analysis) X 20 hrs ÷ 1000 = 2.51 Mcf/day

Pump Jack Manufacturer: Hy-Lift Pumps
Serial No.: 78563-P
Manufacturer fuel use when operated at 75% of rated maximum RPM, 5.87 Mcf/hr X operating 12 hrs. = 70.44 Mcf/day

Water Tank Manufacturer: Super Tanks
Tank Serial No. 3589412-Tank Heater rated at 200,000 btu/hr operated 4 mo/yr, 10 hrs/week,
200,000 btu/hr ÷ 1157 btu/ft^3 (see current gas analysis) X 40 hrs/mo ÷ 1000 = 6.91 MCF/mo.

Oil Tank Manufacturer: Super Tanks
Tank No.: 5678
Tank Serial No. 5863281-Tank Heater rated at 200,000 btu/hr operated 4 mo/yr, 5 hrs/week
200,000 btu/hr ÷ 1157 btu/ft^3 (see current gas analysis) X 20 hrs/mo ÷ 1,000 = 3.46 Mcf/mo.

I-D

Facility Operator/Owner Name: ABC Oil and Gas Federal/Indian Lease, unit PA, or CA Number: NMNM12345

Land Description: New Mexico Principal Meridian, T. 36 N., R. 11 W., sec. 2, NW1/4NE1/4

Page 1 of 3

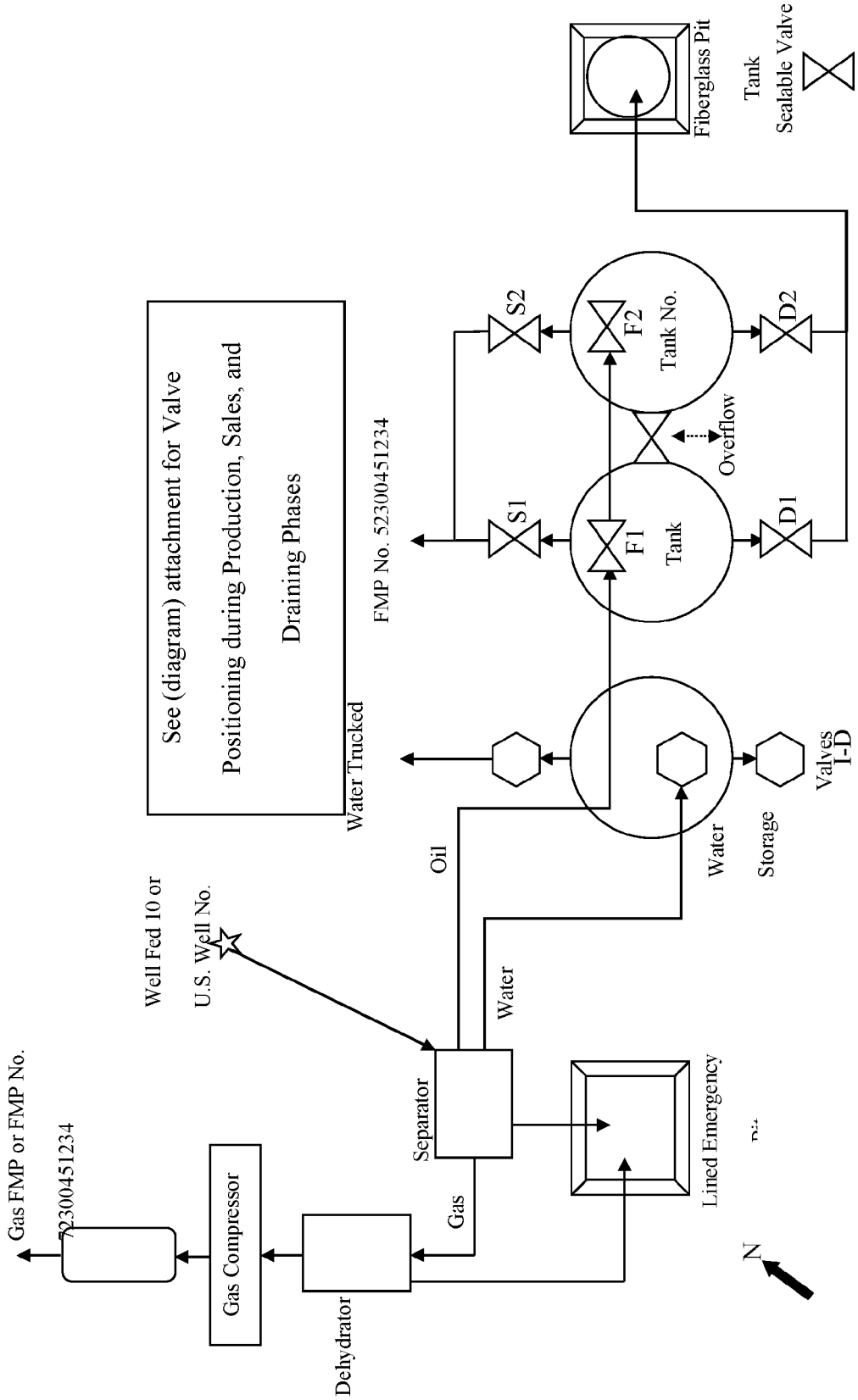

Appendix
Page 2 of 3

Facility Operator/Owner Name: ABC Oil and Gas Federal/Indian Lease, unit PA, or CA Number: NMNM12345

Land Description: New Mexico Principal Meridian, T. 36 N., R. 11 W., sec. 2, NW1/4NE1/4

Diagram #I-D:
F1 and F2 are Fill Valves
S1 and S2 are Sales Valves
D1 and D2 are Drain Valves

Valve Positioning in the Production Phase for

Production into T5678	Production into T1234
S1 and D1 are Sealed Closed	S2 and D2 are Sealed Closed
Overflow is Open	Overflow is Open
F1 or F2 are Open	F1 or are F2 Open

Valve Positioning in the Sales Phase for

Sales from T5678 through S1:	Sales from T1234 through S2:
D1 and F1 are Sealed Closed	D2 and F2 are Sealed Closed
Overflow is Sealed Closed	Overflow is Sealed Closed
S1 is Open	S2 is Open

Valve Positioning in the Drain Phase for

Draining from T5678	Draining from T1234
S1 and F1 are Sealed Closed	S2 and F2 are Sealed Closed
Overflow is Sealed Closed	Overflow is Sealed Closed
D1 is Open	D2 is Open

Compressor Manufacturer: Maximum Compression
Compressor Serial No.: SWS-586324-D
Manufacturer fuel use when operated at 80% of rated maximum, 24.87 Mcf/hr X 24 hrs. = 596.88 Mcf/day

I-D
Page 3 of 3

Facility Operator/Owner Name: ABC Oil and Gas Federal/Indian Lease, unit PA, or CA Number: NMNM12345

Land Description: New Mexico Principal Meridian, T. 36 N., R. 11 W., sec. 2, NW1/4NE1/4

Compressor Manufacturer: Maximum Compression
Compressor Serial No.: SWS-586324-D
Manufacturer fuel use when operated at 80% of rated maximum, 24.87 Mcf/hr X 24 hrs. = 596.88 Mcf/day

Dehydrator Manufacturer: XYZ Equipment
Serial No. 5423895358
Fire box rated at 75,000 btu/hr operated, 20 hrs/day
75,000 btu/hr ÷ 1,157 btu/ft^3 (see current gas analysis) X 24 ÷ 1,000 = 1.56 Mcf/day

Separator Manufacturer: XYZ Equipment
Serial No. F-9876
Fire box rated at 150,000 btu/hr operated 4 mo/yr, 20 hrs/day
150,000 btu/hr ÷ 1,157 btu/ft^3 (see current gas analysis) X 20 hrs ÷1,000 = 2.59 Mcf/day

Water Tank Manufacturer: Super Tanks
Tank Serial No. 3589412-Tank Heater rated at 200,000 btu/hr operated 4 mo/yr, 10 hrs/week, 70% efficiency
200,000 btu/hr ÷ 1,157 btu/ft^3 (see current gas analysis) X 40 hrs/mo ÷ 1,000 = 6.91 Mcf/mo.

Oil Tank Manufacturer: Super Tanks
Tank No.: 5678
Tank Serial No. 5863281-Tank Heater rated at 200,000 btu/hr operated 4 mo/yr, 5 hrs/week
200,000 btu/hr ÷ 1,157 btu/ft^3 (see current gas analysis) X 20 hrs/mo ÷ 1,000 = 3.46 Mcf/mo.

Oil Tank Manufacturer: Unknown
Tank No.: 1234
Tank Serial No. N/A-Tank Heater rated at 200,000 btu/hr operated 4 mo/yr, 5 hrs/week
200,000 btu/hr ÷ 1,157 btu/ft^3 (see current gas analysis) X 20 hrs/mo ÷ 1,000 = 3.46 Mcf/mo.

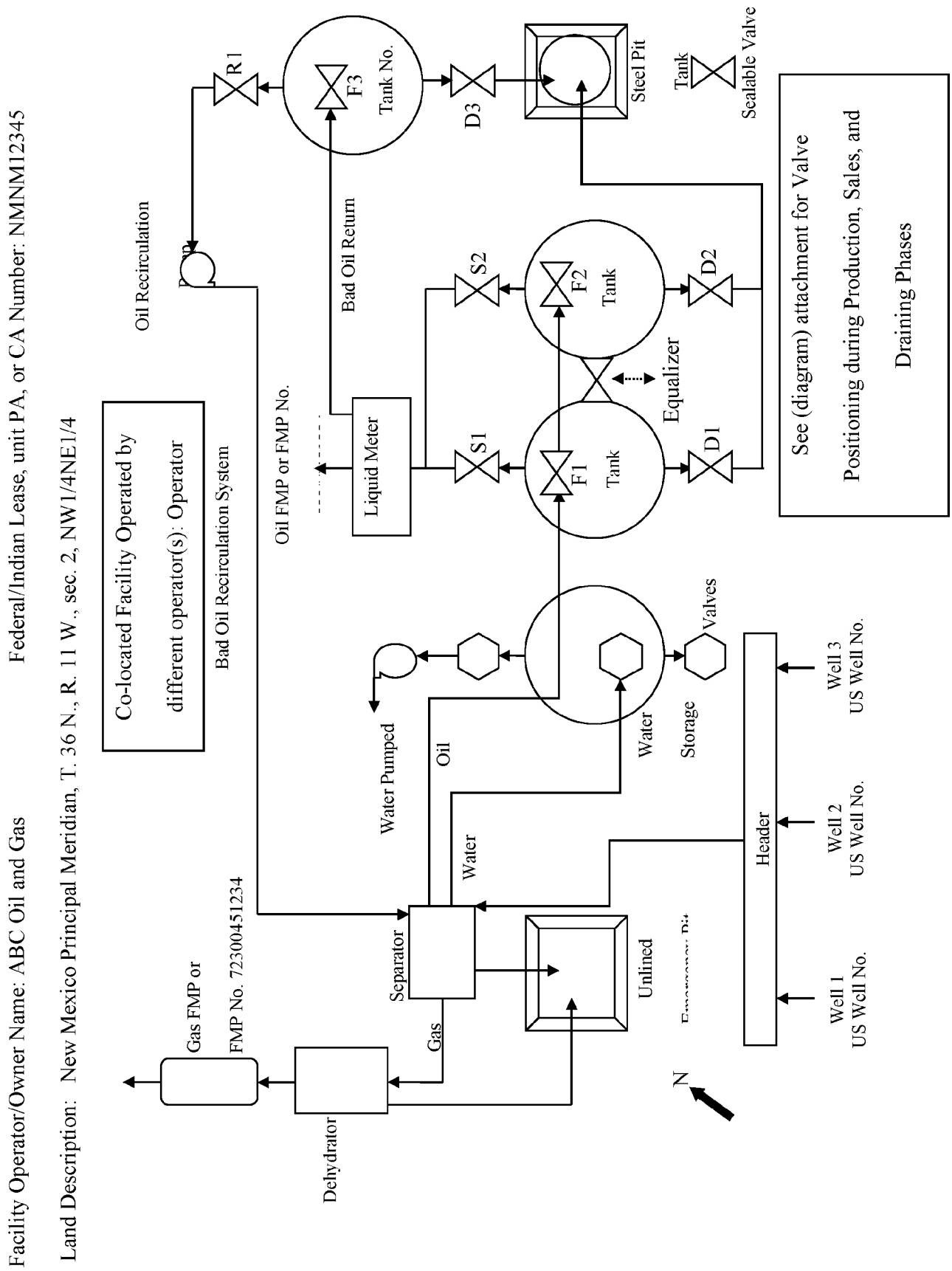
I-E
Page 1 of 4
Facility Operator/Owner Name: ABC Oil and Gas
Federal/Indian Lease, unit PA, or CA Number: NMNM12345
Land Description: New Mexico Principal Meridian, T. 36 N., R. 11 W., sec. 2, NW1/4NE1/4
Co-located Facility Operated by different operator(s): Operator
Bad Oil Recirculation System
Oil FMP or FMP No.
Bad Oil Return
Oil Recirculation
R1
F3
Tank No.
D3
Steel Pit
Tank
Sealable Valve
See (diagram) attachment for Valve Positioning during Production, Sales, and Draining Phases
S2
F2
Tank
D2
Equalizer
Liquid Meter
S1
F1
Tank
D1
Water Pumped
Oil
Water
Storage
Valves
Header
Well 3
US Well No.
Well 2
US Well No.
Well 1
US Well No.
Separator
Gas
Unlined
Gas FMP or
FMP No. 72300451234
Dehydrator
N

Appendix
Page 2 of 4

Facility Operator/Owner Name: ABC Oil and Gas Federal/Indian Lease, unit PA, or CA Number: NMNM12345

Land Description: New Mexico Principal Meridian, T. 36 N., R. 11 W., sec. 2, NW1/4NE1/4

Diagram #I-E:
F1, F2 and F3 are Fill Valves
S1 and S2 are Sales Valves
D1 and D2 are Drain Valves
R1 is a Recirculation Valve

Valve Positioning in the Production Phase for
Production into T5678, T1234 and 6851
S1, F1, F2, F3 and R1 are Open
D1 and D2 are Sealed Closed
Equalizer is open

Valve Positioning in the Sales Phase for
Production into T5678, T1234 and 6851
S1, F1, F2, F3 and R1 are Open
D1 and D2 are Sealed Closed
Equalizer is open

Valve Positioning in the Drain Phase for

Draining from T5678
S1 and F1 are Sealed Closed
Equalizer is Sealed Closed
D1 and S2 are Open
D2 is Sealed Closed

Draining from T1234
S2 and F2 are Sealed Closed
Equalizer is Sealed Closed
D2 and S1 are Open
D1 is Sealed Closed

Dehydrator Manufacturer: XYZ Equipment
Serial No. 5423895358

Fire box rated at 75,000 btu/hr operated 24 hrs/day, 20 hrs/day
75,000 btu/hr ÷ 1,157 btu/ft^3 (see current gas analysis) X 24 ÷ 1,000 = 1.56 Mcf/day

I-E
Page 3 of 4

Facility Operator/Owner Name: ABC Oil and Gas Federal/Indian Lease, unit PA, or CA Number: NMNM12345

Land Description: New Mexico Principal Meridian, T. 36 N., R. 11 W., sec. 2, NW1/4NE1/4

Dehydrator Manufacturer: XYZ Equipment
Serial No. 5423895358
Fire box rated at 75,000 btu/hr operated 24 hrs/day, 20 hrs/day
75,000 btu/hr ÷ 1,157 btu/ft^3 (see current gas analysis) X 24 ÷ 1,000 = 1.56 Mcf/day

Separator Manufacturer: XYZ Equipment
Serial No. F-9876
Fire box rated at 150,000 btu/hr operated 4 mo/yr, 20 hrs/day
150,000 btu/hr ÷ 1,157 btu/ft^3 (see current gas analysis) X 20 ÷ 1,000 = 2.59 Mcf/day
Charge pump, water pump and oil recirculation pump are electric motor driven and not subject to beneficial use.
Valve Positioning in the Drain Phase for Tank No. 6851
R1 is Sealed Closed
F3 is Sealed Closed
D3 Open

I-E
Page 4 of 4

Facility Operator/Owner Name: ABC Oil and Gas Federal/Indian Lease, unit PA, or CA Number: NMNM12345

Land Description: New Mexico Principal Meridian, T. 36 N., R. 11 W., sec. 2, NW1/4NE1/4

The following components on liquid measurement metering system will be effectively sealed (list as appropriate) for oil FMP (or FMP No. 62300451234):

1. Sampler volume control;
2. All valves on lines entering or leaving the sample container excluding the safety pop-off valve (if so equipped). Each valve must be sealed in the open or closed position, as appropriate;
3. Mechanical counter head (totalizer) and meter head;
4. Stand-alone temperature averager monitor;
5. Non-automatic adjusting, fixed, back pressure valve pressure adjustment downstream of the meter;
6. Any drain valves larger than 1 inch in nominal diameter in the system; and
7. Right-angle drive.

I-F

Facility Operator/Owner Name: Oil and Gas Plant Operations Inc. Federal/Indian Lease, unit PA, or CA Number: NMNM12345

Land Description: New Mexico Principal Meridian, T. 36 N., R. 11 W., sec. 2, NW1/4NE1/4

Page 1 of 4

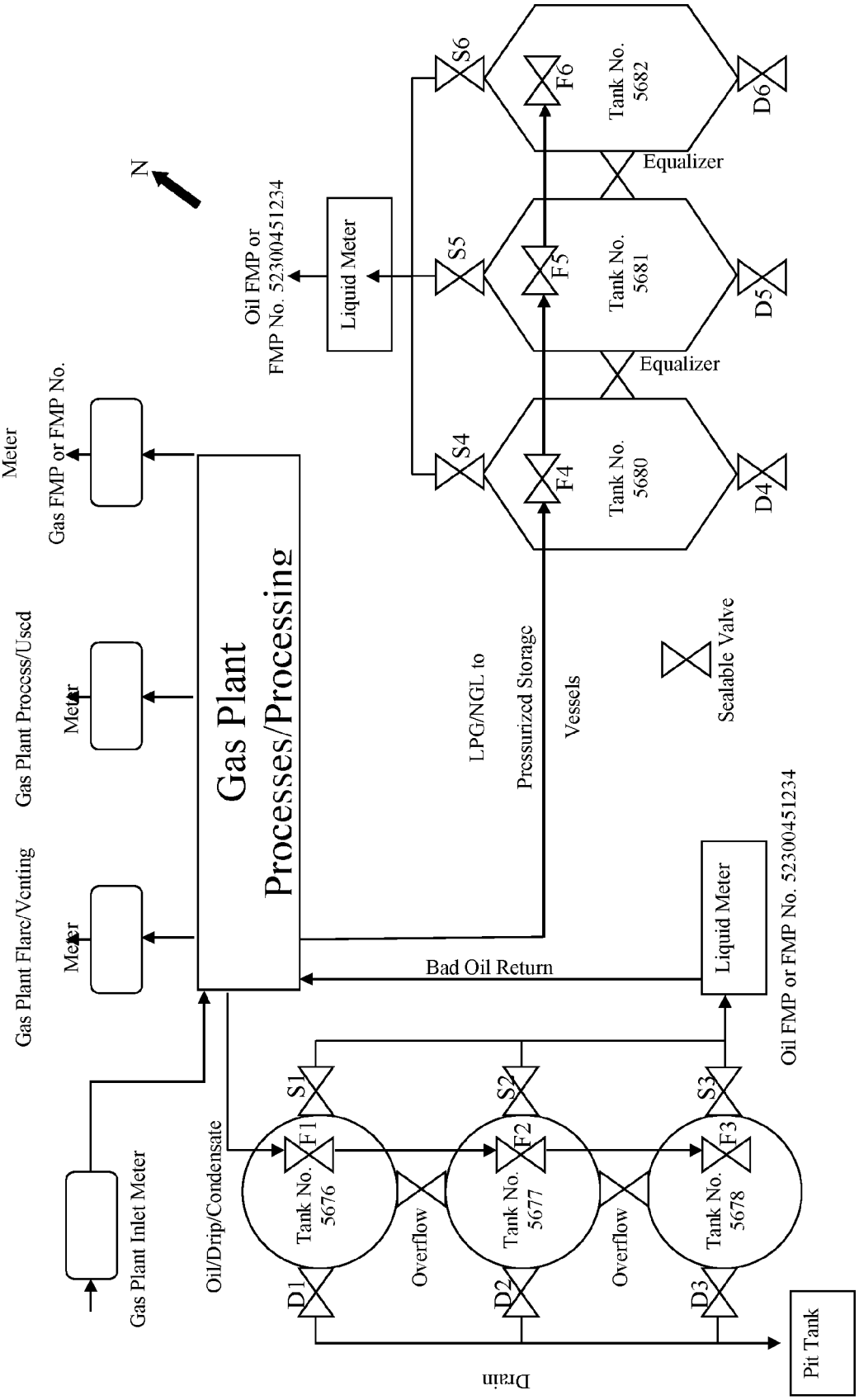

I-F
Appendix

Facility Operator/Owner Name: ABC Oil and Gas

Federal/Indian Lease, unit PA, or CA Number: NMNM12345

Land Description: New Mexico Principal Meridian,
T. 36 N., R. 11 W., sec. 2, NW1/4NE1/4

Page 2 of 4

Diagram #I-F:
F1, F2, F3, F4, F5, and F6 are Fill Valves
S1, S2, S3, S4, S5, and S6 are Sales Valves
D1, D2, D3, D4, D5 and D6 are Drain Valves

Valve Positioning in the Production Phase for

Production into T5676:	Production into T5677:	Production into T5678:
D1 is Sealed Closed	D2 is Sealed Closed	D3 is Sealed Closed

Valve Positioning in the Sales Phase for

Sales from T5676 through S1:	Sales from T5677 through S2:	Sales from T5678:
D1 is Sealed Closed	D2 is Sealed Closed	D3 is Sealed Closed

Valve Positioning in the Drain Phase for

Draining from T5676:	Draining from T5677:	Draining from T5678:
S1 is Sealed Closed	S2 is Sealed Closed	S3 is Sealed Closed
F1 is Sealed Closed	F2 is Sealed Closed	F3 is Sealed Closed
Overflow is Sealed Closed	Overflow is Sealed Closed	Overflow is Sealed Closed
D1 is Open	D2 is Open	D3 is Open

Valve Positioning in the Production Phase for

Production into T5680:	Production into T5681:	Production into T5682:
S4 is Sealed Closed	S5 is Sealed Closed	S6 is Sealed Closed
D4 is Sealed Closed	D5 is Sealed Closed	D6 is Sealed Closed

I-F

Facility Operator/Owner Name: ABC Oil and Gas

Federal/Indian Lease, unit PA, or CA Number: NMNM12345

Land Description: New Mexico Principal Meridian,
T. 36 N., R. 11 W., sec. 2, NW1/4NE1/4

Page 3 of 4

Valve Positioning in the Sales Phase for

Sales from T5680 through S1:	Sales from T5681 through S2:	Sales from T5682:
S4 is Sealed Closed	S5 is Sealed Closed	S6 is Sealed Closed
D4 is Sealed Closed	D5 is Sealed Closed	D6 is Sealed Closed

Valve Positioning in the Drain Phase for

Draining from T5680:	Draining from T5681:	Draining from T5682:
S4 is Sealed Closed	S5 is Sealed Closed	S6 is Sealed Closed
F4 is Sealed Closed	F5 is Sealed Closed	F6 is Sealed Closed
Overflow is Sealed Closed	Overflow is Sealed Closed	Overflow is Sealed Closed
D4 is Open	D5 is Open	D6 is Open

Gas Plant Inlet Meter
Meter Manufacturer: ABC Metering
Meter Serial No.: G-25684523
Meter Tube Manufacturer and Serial No.: Best Meter Tubes, VUH2635X

Gas Plant Flared/Venting Meter
Meter Manufacturer: ABC Metering
Meter Serial No.: R-25368456
Meter Tube Manufacturer and Serial No.: Best Meter Tubes, BAS23587ADD

Gas Plant Process/Used Meter
Meter Manufacturer: ABC Metering
Meter Serial No.: H-398742
Meter Tube Manufacturer and Serial No.: Best Meter Tubes, FG15783854HJK

I-F

Facility Operator/Owner Name: ABC Oil and Gas

Federal/Indian Lease, unit PA, or CA Number: NMNM12345

Land Description: New Mexico Principal Meridian,
T. 36 N., R. 11 W., sec. 2, NW1/4NE1/4

Page 4 of 4

Gas Plant Process/Used Meter
Meter Manufacturer: ABC Metering
Meter Serial No.: H-398742
Meter Tube Manufacturer and Serial No.: Best Meter Tubes, FG15783854HJK

The following components on liquid measurement metering system will be effectively sealed (list as appropriate) for oil FMP (or FMP No. 62300451234):

1. Sampler volume control;
2. All valves on lines entering or leaving the sample container excluding the safety pop-off valve (if so equipped). Each valve must be sealed in the open or closed position, as appropriate;
3. Mechanical counter head (totalizer) and meter head;
4. Stand-alone temperature averager monitor;
5. Non-automatic adjusting, fixed, back pressure valve pressure adjustment downstream of the meter;
6. Any drain valves larger than 1 inch in nominal diameter in the system; and
7. Right-angle drive.

I-G

Facility Operator/Owner Name: ABC Oil and Gas
NMNM98765
Land Description: New Mexico Principal Meridian,
T. 36 N., R. 11 W., sec. 2, NW1/4NE1/4

Federal/Indian Lease, unit PA, or CA Number:

Page 1 of 3

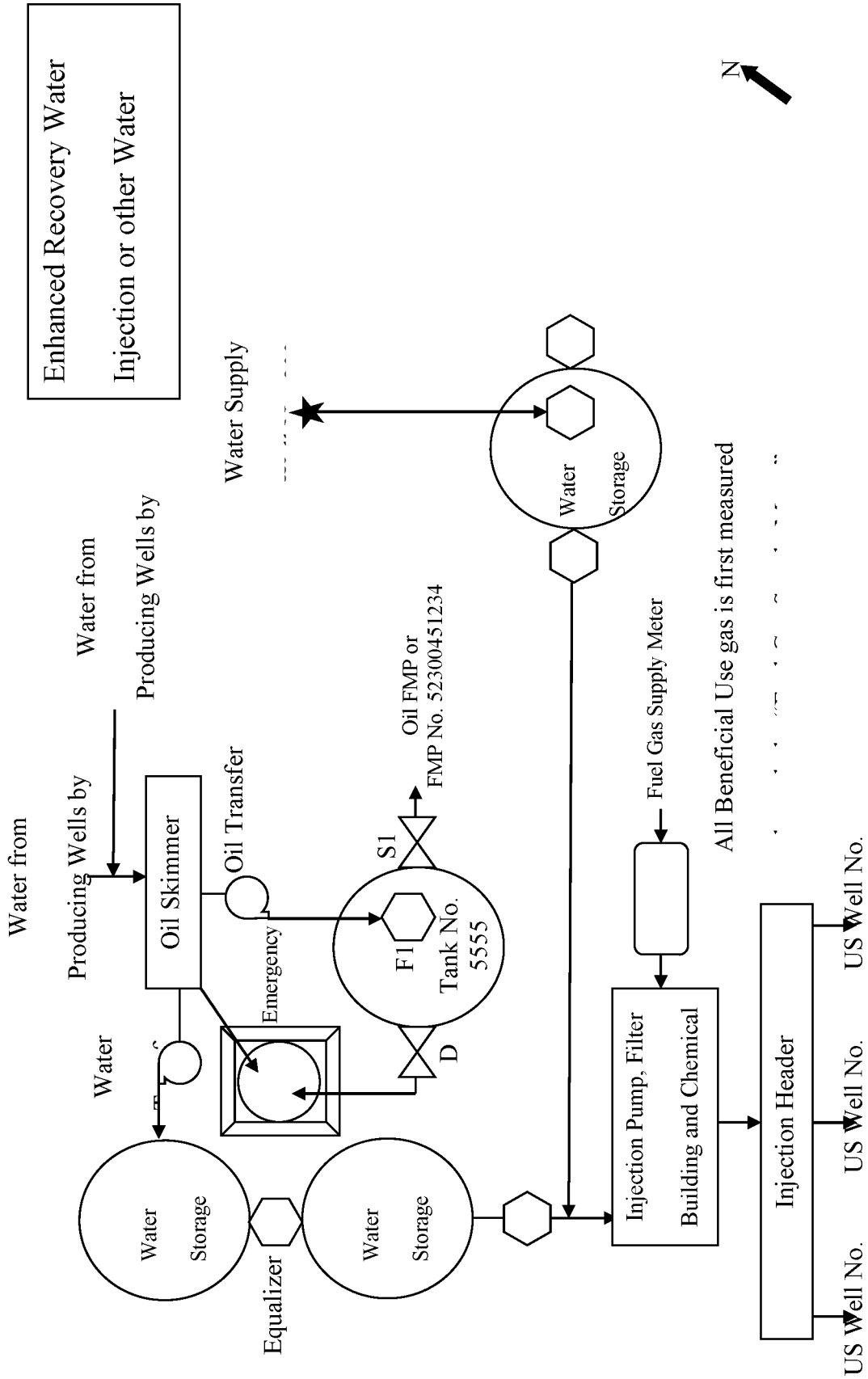

I-G
Appendix

Facility Operator/Owner Name: ABC Oil and Gas
Land Description: New Mexico Principal Meridian,
T. 36 N., R. 11 W., sec. 2, NW1/4NE1/4

Federal/Indian Lease, unit PA, or CA Number: NMNM98765

Page 2 of 3

Diagram #I-G:
F1 is the Fill Valve
S1 is the Sales Valve
D1 is the Drain Valve

Valve Positioning in the Production Phase for
Production into T5555
S1 is Sealed Closed
F1 is Open
D1 is Sealed Closed

Valve Positioning in the Sales Phase for
Sales from T5555
S1 is Open
F1 is Open
D1 is Sealed Closed

Valve Positioning in the Drain Phase for
Draining from T5555
S1 is Sealed Closed
F1 is Open
D1 is Open

Oil Tank Manufacturer: Super Tanks
Tank No.: 5555
Tank Serial No. 5863281

I-G
Page 3 of 3:

Fuel gas meter
Meter Manufacturer: ABC Metering
Meter Serial No.: F-258645
Meter Tube Manufacturer and Serial No.: Best Meter Tubes, DRFG254

I-H

Facility Operator/Owner Name: ABC Oil and Gas
NMNM98765
Land Description: New Mexico Principal Meridian,
T. 36 N., R. 11 W., sec. 2, NW1/4NE1/4

Federal/Indian Lease, unit PA, or CA Number:

Page 1 of 4

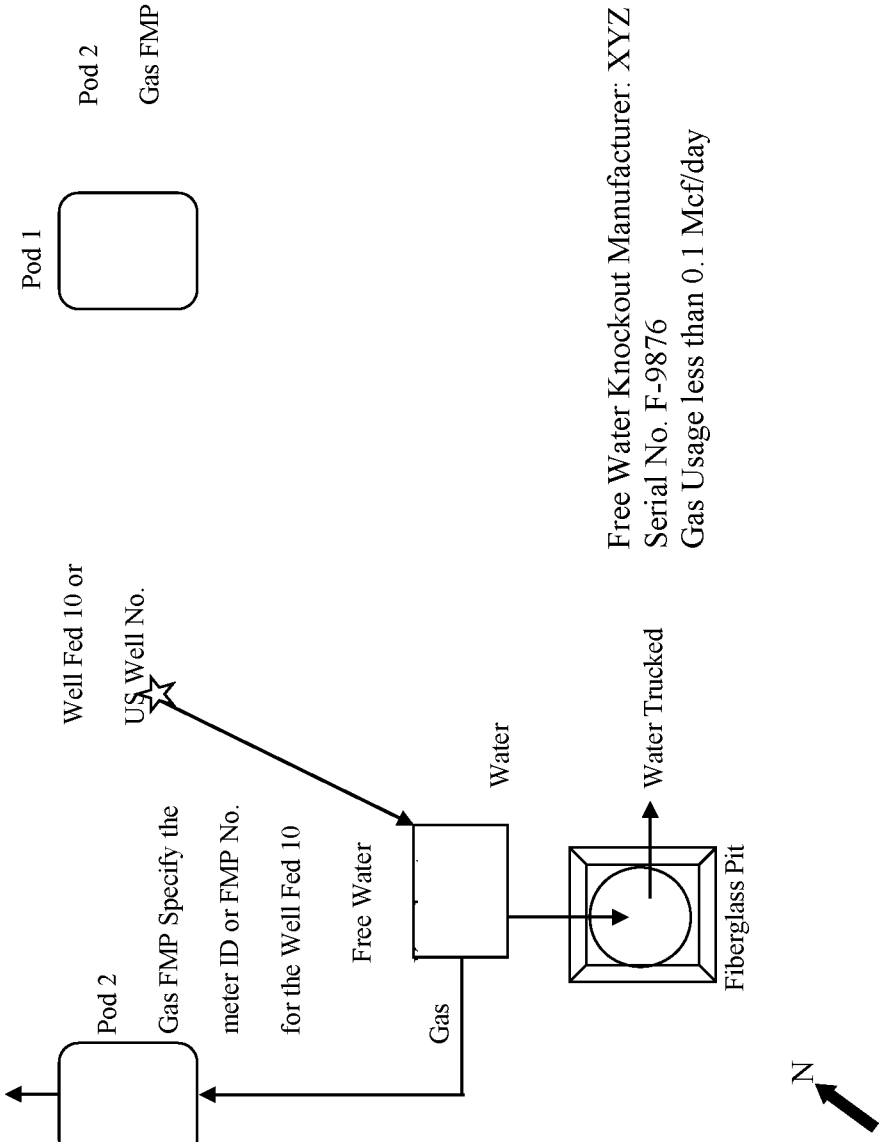

I-H

Facility Operator/Owner Name: ABC Oil and Gas
NMNM98765
Land Description: New Mexico Principal Meridian,
T. 36 N., R. 11 W., sec. 2, NW1/4NE1/4

Federal/Indian Lease, unit PA, or CA Number:

Page 2 of 3

POD Facility
2

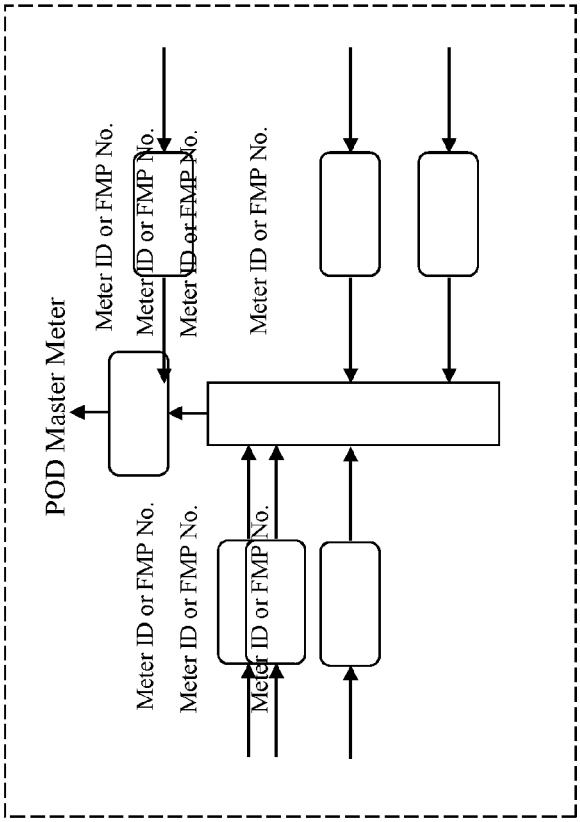

POD Facility
1

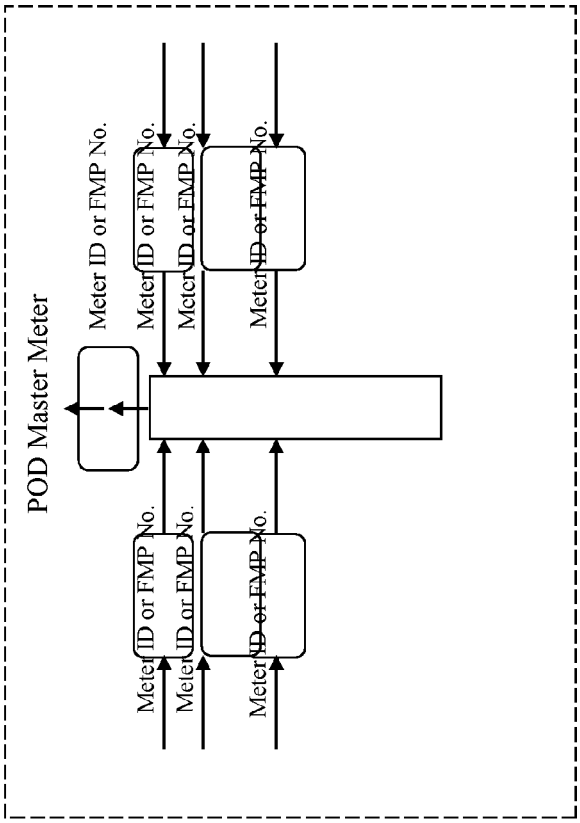

I-H

Facility Operator/Owner Name: ABC Oil and Gas Federal/Indian Lease, unit PA, or CA Number: NMNM98765

Land Description: New Mexico Principal Meridian, T. 36 N., R. 11 W., sec. 2, NW1/4NE1/4

Page 3 of 3

POD 1
Master ID or FMP No.

Meter ID or FMP No. Meter ID or FMP No.
Federal/Indian Lease, unit PA, or CA Number: NMNM98765 Federal/Indian Lease, unit PA, or CA Number: NMNM98765

Meter ID or FMP No. Meter ID or FMP No.
Federal/Indian Lease, unit PA, or CA Number: NMNM1234A Federal/Indian Lease, unit PA, or CA Number: NMNM56789D

Meter ID or FMP No. Meter ID or FMP No.
Federal/Indian Lease, unit PA, or CA Number: NMSF10254 Federal/Indian Lease, unit PA, or CA Number: NMSF10254

POD 1
Master ID or FMP No.

Meter ID or FMP No. Meter ID or FMP No.
Federal/Indian Lease, unit PA, or CA Number: NMNM56789 Federal/Indian Lease, unit PA, or CA Number: NMNM54321A

Meter ID or FMP No. Meter ID or FMP No.
Federal/Indian Lease, unit PA, or CA Number: NMNM1234C Federal/Indian Lease, unit PA, or CA Number: NMNM56789B

Meter ID or FMP No. Meter ID or FMP No.
Federal/Indian Lease, unit PA, or CA Number: NMSF10983 Federal/Indian Lease, unit PA, or CA Number: NMSF10254

I-I

Facility Operator/Owner Name: ABC Oil and Gas Federal/Indian Lease, unit PA, or CA Number: NMNM12345

Land Description: New Mexico Principal Meridian, T. 36 N., R. 11 W., sec. 2, NW1/4NE1/4 Page 1 of 3

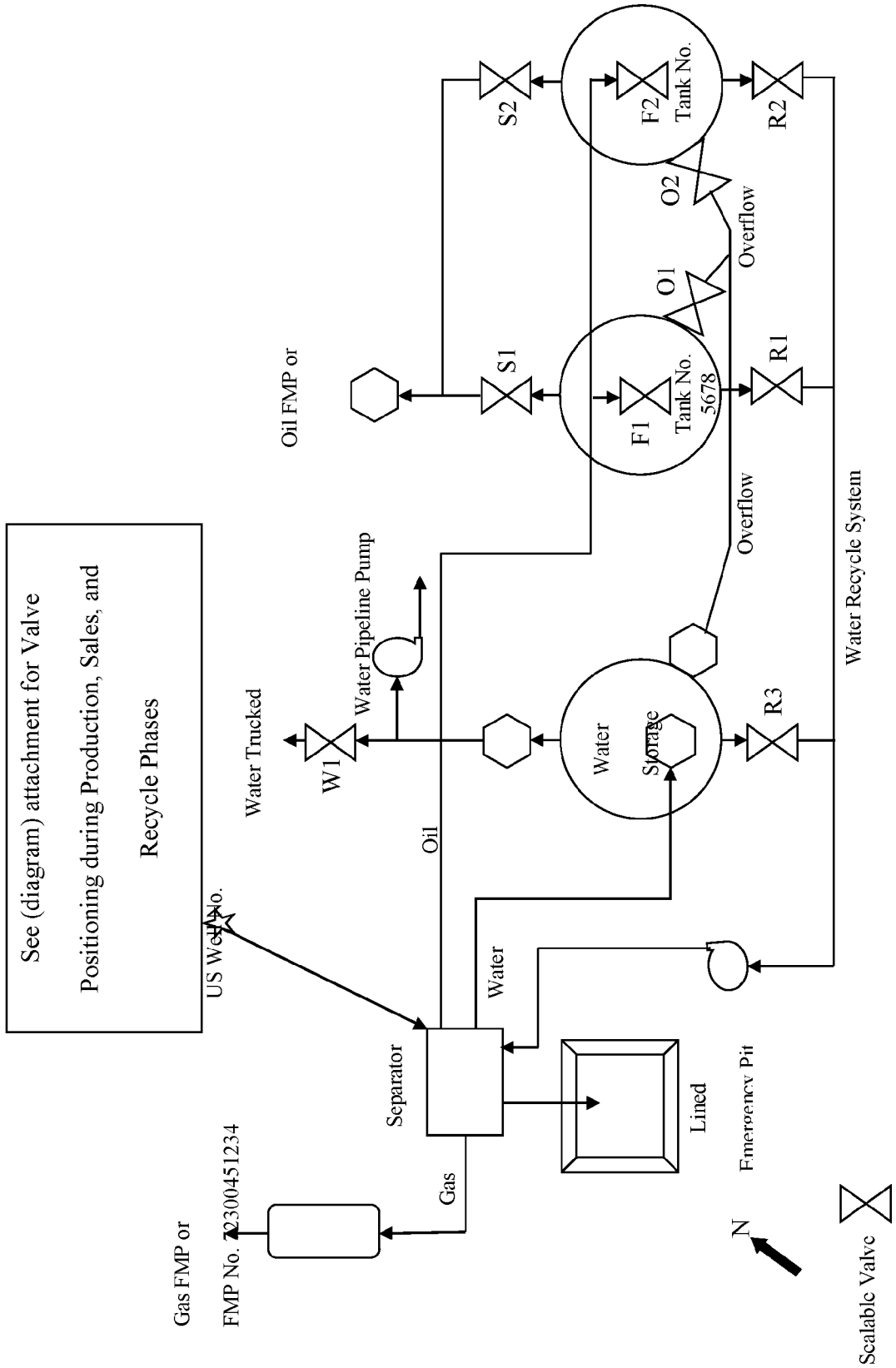

I-I
Appendix
Page 2 of 3

Facility Operator/Owner Name: ABC Oil and Gas Federal/Indian Lease, unit PA, or CA Number: NMNM12345
Land Description: New Mexico Principal Meridian, T. 36 N., R. 11 W., sec. 2, NW1/4NE1/4

Diagram #I-I:
F1 and F2 are Fill Valves
S1 and S2 are Sales Valves
R1, R2, and R3 are Recycle Valves
O1 and O2 are Overflow Valves

Valve Positioning in the Production Phase

Production into T5678	Production into T1234
S1 and D1 are Sealed Closed	S2 and D2 are Sealed Closed
O1 and O2 are Open	O1 and O2 are Open
F1 or F2 are Open	F1 or F2 are Open

Valve Positioning in the Sales Phase

Sales from T5678 through S1:	Sales from T1234 through S2:
D1, F1, and O1 are Sealed Closed	D2, F2, and O2 are Sealed Closed
S1 is Open	S2 is Open

Valve Positioning in the Recycle Phase

Recycle from T5678	Recycle from T1234
S1 is Sealed Closed	S2 is Sealed Closed
F1, O1, O2 and R1 are Open	F1, O1, O2, and R2 are Open

Water storage valve W1 is Sealed Closed except for loading water to truck. Note: Not required by BLM standards.

I-I
Appendix
Page 3 of 3

Facility Operator/Owner Name: ABC Oil and Gas Federal/Indian Lease, unit PA, or CA Number: NMNM12345

Land Description: New Mexico Principal Meridian, T. 36 N., R. 11 W., sec. 2, NW1/4NE1/4

Separator Manufacturer: XYZ Equipment
Serial No. F-9876
Fire box rated at 150,000 btu/hr operated 4 mo/yr, 20 hrs/day
150,000 btu/hr ÷ 1,157 btu/ft^3 (see current gas analysis) X 20 hrs ÷1,000 = 2.59 Mcf/day

Water Tank Manufacturer: Super Tanks
Tank Serial No. 3589412Tank Heater rated at 200,000 btu/hr operated 4 mo/yr, 10 hrs/week, 70% efficiency
200,000 btu/hr ÷ 1,157 btu/ft^3 (see current gas analysis) X 40 hrs/mo ÷ 1,000 = 6.91 Mcf/mo.

Oil Tank Manufacturer: Super Tanks
Tank No. 5678
Tank Serial No. 5863281-Tank Heater rated at 200,000 btu/hr operated 4 mo/yr, 5 hrs/week
200,000 btu/hr ÷ 1,157 btu/ft^3 (see current gas analysis) X 20 hrs/mo ÷ 1,000 = 3.46 Mcf/mo.

Oil Tank Manufacturer: Unknown
Tank No. 1234
Tank Serial No. N/A-Tank Heater rated at 200,000 btu/hr operated 4 mo/yr, 5 hrs/week
200,000 btu/hr ÷ 1,157 btu/ft^3 (see current gas analysis) X 20 hrs/mo ÷ 1,000 = 3.46 Mcf/mo.

Water pipeline pump and recycle pump powered by gasoline engines and not subject to beneficial use.

BILLING CODE 4310–84–C

■ 4. Revise subpart 3174 to read as follows:

Subpart 3174—Measurement of Oil

Sec.
3174.10 Definitions and acronyms.
3174.20 General requirements.
3174.30 Incorporation by reference (IBR).
3174.31 Specific measurement performance requirements.

3174.40 Approved measurement equipment and data requirements.
3174.41 Measurement equipment requiring BLM approval.
3174.42 Approved measurement equipment.
3174.43 Data submission and notification requirements.
3174.50 Grandfathering.
3174.60 Timeframes for compliance.
3174.70 Measurement location.
3174.80 Oil storage tank equipment.
3174.81 Oil measurement by tank gauging.
3174.82 Oil tank calibration.
3174.83 Tank gauging procedures.
3174.84 Tank oil sampling.
3174.85 Determining S&W content.
3174.86 Tank oil temperature determination.
3174.87 Observed oil gravity determination.
3174.88 Measuring tank fluid level.
3174.90 LACT systems—general requirements.
3174.100 LACT systems—components and operating requirements.
3174.101 Charging pump and motor.
3174.102 Sampling and mixing system.
3174.103 Air eliminator.
3174.104 LACT meter.
3174.105 Electronic temperature averaging device.
3174.106 Pressure-indicating device.
3174.107 Meter-proving connections.
3174.108 Back-pressure and check valves.
3174.110 Coriolis meter operating requirements.
3174.120 Electronic liquids measurement, ELM (secondary and tertiary device).
3174.121 Measurement data system (MDS).
3174.130 Coriolis measurement systems (CMS)—general requirements and components.
3174.140 Temporary measurement.
3174.150 Meter-proving requirements.
3174.151 Meter prover.
3174.152 Meter-proving runs.
3174.153 Minimum proving frequency.
3174.154 Excessive meter factor deviation.
3174.155 Verification of the temperature transducer.
3174.156 Verification of the pressure transducer (if applicable).
3174.157 Density verification (if applicable).
3174.158 Meter proving reporting requirements.
3174.160 Measurement tickets.
3174.161 Tank gauging measurement ticket.
3174.162 LACT system and CMS measurement ticket or volume statement.
3174.170 Oil measurement by other methods.
3174.180 Determination of oil volumes by methods other than measurement.
3174.190 Immediate assessments.

§ 3174.10 Definitions and acronyms.

(a) As used in this subpart, the term:

Barrel (bbl) means 42 standard United States gallons.

Base pressure means:

(i) 0.0 pounds per square inch, gauge (psig);

(ii) 14.696 pounds per square inch, absolute (psia); or

(iii) Local atmospheric pressure for static measurement.

Base temperature means 60 °F.

Certificate of calibration means a document stating the base prover volume and other physical data required for the calibration of flow meters.

Composite meter factor means a meter factor corrected from normal operating pressure to base pressure. The composite meter factor is determined by proving operations where the pressure is considered constant during the measurement period between provings.

Coriolis measurement system (CMS) means a metering system using a Coriolis meter in conjunction with an ELM, tertiary device, pressure transducer, and temperature transducer in order to derive and report gross standard oil volume. A CMS system provides real-time, on-line measurement of oil.

Coriolis meter means a device, which determines a mass flow rate by means of the interaction between a flowing fluid and oscillation of tube(s). The meter also infers the density by measuring the natural frequency of the oscillating tubes. The Coriolis meter consists of sensors and a transmitter, which convert the output from the sensors to signals representing volume and density.

Displacement prover means a prover consisting of a pipe or pipes with known capacities, a displacement device, and detector switches, which sense when the displacement device has reached the beginning and ending points of the calibrated section of pipe. Displacement provers can be portable or fixed.

Dynamic meter factor means a kinetic meter factor derived by linear interpolation or polynomial fit, used for conditions where a series of meter factors have been determined over a range of normal operating conditions.

Electronic liquids measurement (ELM) means all the hardware and software necessary to convert indicated volume, meter factor, flowing temperature, and flowing pressure to a gross standard volume or net standard volume that is used to determine Federal royalty. This includes, but is not limited to, any BLM-approved meter, temperature transducer, pressure transducer, flow computer, display, memory, and any internal or external processes used to edit and present the data or values measured.

Gross standard volume means a volume of oil corrected to base pressure and temperature, and includes meter factor as applicable.

High-volume FMP means any FMP that measures more than 1,500, but less than 15,000 bbl oil/month over the averaging period.

Indicated volume means the uncorrected volume indicated by the meter in a LACT system or the Coriolis meter in a CMS. For a positive displacement meter, the indicated volume is represented by the non-resettable totalizer on the meter head. For Coriolis meters, the indicated volume is the uncorrected (without the meter factor) mass of liquid divided by the density.

Innage gauging means the level of a liquid in a tank measured from the datum plate or tank bottom to the surface of the liquid.

Lease automatic custody transfer (LACT) system means a system of components designed to provide for the unattended custody transfer of oil produced from a lease(s), unit PA(s), or CA(s) to the transporting carrier while providing a proper and accurate means for determining the net standard volume and quality, and fail-safe and tamper-proof operations.

Low-volume FMP means any FMP that measures 1,500 bbl oil/month or less over the averaging period.

Master meter prover means a positive displacement meter or Coriolis meter that is selected, maintained, and operated to serve as the reference device for the proving of another meter. A comparison of the master meter to the Facility Measurement Point (FMP) line meter output is the basis of the master-meter method.

Measurement period means the duration between the opening date and time and closing date and time of a measurement ticket or QTR volume statement.

Meter factor means a ratio obtained by dividing the measured volume of liquid that passed through a prover or master meter during the proving by the measured volume of liquid that passed through the line meter during the proving, corrected to base pressure and temperature.

Net standard volume means the gross standard volume corrected for quantities of non-merchantable substances such as sediment and water.

Positive displacement meter means a meter that registers the volume passing through the meter using a system, which constantly and mechanically isolates the flowing liquid into segments of known volume.

Quantity transaction record (QTR) means a report generated by a flow computer on a LACT, CMS, or other system approved by the BLM that summarizes the daily and/or hourly volume calculated by the flow computer and the average or totals of the dynamic

data that is used in the calculation of gross standard volume. Volumes can be displayed as observed and/or gross standard volume, as required.

Transducer means an electronic device that converts a physical property, such as pressure, temperature, or electrical resistance, into an electrical output signal that varies proportionally with the magnitude of the physical property. Typical output signals are in the form of electrical potential (volts), current (milliamps), or digital pressure or temperature readings. The term transducer includes devices commonly referred to as transmitters.

Vapor tight means capable of holding pressure differential at the installed pressure-relieving or vapor-recovery devices' settings.

Very-high-volume FMP means any FMP that measures 15,000 bbl oil/month or more over the averaging period.

(b) As used in this subpart, the following acronyms carry the meaning prescribed:

API means American Petroleum Institute.

CA has the meaning set forth in § 3170.10 of this part.

COA has the meaning set forth in § 3170.10 of this part.

CPL means correction for the effect of pressure on a liquid.

CTL means correction for the effect of temperature on a liquid.

NIST means National Institute of Standards and Technology.

PA has the meaning set forth in § 3170.10 of this part.

PMT means Production Measurement Team.

PSIA means pounds per square inch, absolute.

S&W means sediment and water.

§ 3174.20 General requirements.

(a) Measurement of all oil at an FMP must comply with the standards prescribed in this subpart.

(b) Oil may be stored only in tanks that meet the requirements of § 3174.80.

(c) An operator must obtain a BLM-approved FMP number under §§ 3173.60 and 3173.61 of this part for each oil measurement facility where the measurement affects the calculation of the volume or quality of production on which royalty is owed (*i.e.,* oil tank used for tank gauging, LACT system, CMS, or other approved metering device), except as provided in paragraph (d) of this section.

(d) Meters used for allocation under a commingling and allocation approval under § 3173.70 are not required to meet the requirements of this subpart.

§ 3174.30 Incorporation by reference (IBR).

(a) Certain material is incorporated by reference into this part with the approval of the Director of the Federal Register under 5 U.S.C. 552(a) and 1 CFR part 51. To enforce any edition other than that specified in this section, the BLM must publish a rule in the **Federal Register**, and the material must be reasonably available to the public. All approved material is available for inspection at the Bureau of Land Management, Division of Fluid Minerals, 20 M Street SE, Washington, DC 20003, 202–912–7162; at all BLM offices with jurisdiction over oil and gas activities; and is available from the sources listed as follows. It is also available for inspection at the National Archives and Records Administration (NARA). For information on the availability of this material at NARA, email *fedreg.legal@nara.gov* or go to *www.archives.gov/federal-register/cfr/ibr-locations.html.*

(b) American Petroleum Institute (API), 1220 L Street NW, Washington, DC 20005; telephone 202–682–8000; API also offers free, read-only access to all of the material at *http://publications.api.org.*

(1) API Manual of Petroleum Measurement Standards (MPMS) Chapter 2—Tank Calibration, Section 2A, Measurement and Calibration of Upright Cylindrical Tanks by the Manual Tank Strapping Method; First Edition, February 1995; Reaffirmed, February 2012; Reaffirmed, August 2017 (''API 2.2A''), IBR approved for § 3174.82(a).

(2) API MPMS Chapter 2—Tank Calibration, Section 2B, Calibration of Upright Cylindrical Tanks Using the Optical Reference Line Method; First Edition, March 1989; Reaffirmed, January 2013 (''API 2.2B''), IBR approved for § 3174.82(a).

(3) API MPMS Chapter 2—Tank Calibration, Section 2C—Calibration of Upright Cylindrical Tanks Using the Optical-triangulation Method; First Edition, January 2002; Reaffirmed, April 2013 (''API 2.2C''), IBR approved for § 3174.82(a).

(4) API MPMS Chapter 3.1A, Standard Practice for the Manual Gauging of Petroleum and Petroleum Products; Third Edition, August 2013; Reaffirmed, December 2018 (''API 3.1A''), IBR approved for §§ 3174.80(f), 3174.88(a).

(5) API MPMS Chapter 3—Tank Gauging, Section 1B—Standard Practice for Level Measurement of Liquid Hydrocarbons in Stationary Tanks by Automatic Tank Gauging; Third Edition, April 2018 (''API 3.1B''), IBR approved for § 3174.88(b).

(6) API MPMS Chapter 3—Tank Gauging, Section 6—Measurement of Liquid Hydrocarbons by Hybrid Tank Measurement Systems; First Edition, February 2001; Errata, September 2005; Reaffirmed, January 2017 (''API 3.6''), IBR approved for § 3174.88(b).

(7) API MPMS Chapter 4—Proving Systems, Section 1—Introduction; Third Edition, February 2005; Reaffirmed June 2014 (''API 4.1''), IBR approved for § 3174.152.

(8) API MPMS Chapter 4—Proving Systems, Section 2—Displacement Provers; Third Edition, September 2003; Reaffirmed, March 2011; Addendum, February 2015 (''API 4.2''), IBR approved for §§ 3174.151(b), (d), and (e), 3174.152(b).

(9) API MPMS Chapter 4.5, Master-Meter Provers; Fourth Edition, June 2016 (''API 4.5''), IBR approved for § 3174.151(a).

(10) API MPMS Chapter 4—Proving Systems, Section 6—Pulse Interpolation; Second Edition, May 1999; Errata, April 2007; Reaffirmed, October 2013 (''API 4.6''), IBR approved for § 3174.152(b).

(11) API MPMS Chapter 4.8, Operation of Proving Systems; Second Edition, September 2013 (''API 4.8''), IBR approved for §§ 3174.151(a) and (b), 3174.152(c).

(12) API MPMS Chapter 4—Proving Systems, Section 9—Methods of Calibration for Displacement and Volumetric Tank Provers, Part 2—Determination of the Volume of Displacement and Tank Provers by the Waterdraw Method of Calibration; First Edition, December 2005; Reaffirmed, July 2015 (''API 4.9.2''), IBR approved for § 3174.151(b).

(13) API MPMS Chapter 5—Metering, Section 6—Measurement of Liquid Hydrocarbons by Coriolis Meters; First Edition, October 2002; Reaffirmed, November 2013 (''API 5.6''), IBR approved for §§ 3174.130(e), 3174.157.

(14) API MPMS Chapter 7.1, Temperature Determination—Liquid-in-Glass Thermometers; Second Edition, August 2017 (''API 7.1''), IBR approved for § 3174.86 introductory paragraph and (b).

(15) API MPMS Chapter 7—Temperature Determination, Section 2—Portable Electronic Thermometers; Third Edition, May 2018 (''API 7.2''), IBR approved for § 3174.86 introductory paragraph.

(16) API MPMS Chapter 7—Temperature Determination, Section 4—Dynamic Temperature Measurement; Second Edition, January 2018 (''API 7.4''), IBR approved for § 3174.105(c).

(17) API MPMS Chapter 8.1, Standard Practice for Manual Sampling of Petroleum and Petroleum Products;

Fourth Edition, October 2013 (''API 8.1''), IBR approved for §§ 3174.84, 3174.157.

(18) API MPMS Chapter 8.2, Standard Practice for Automatic Sampling of Petroleum and Petroleum Products; Fourth Edition, November 2016 (''API 8.2''), IBR approved for §§ 3174.102, 3174.157.

(19) API MPMS Chapter 8—Sampling, Section 3—Standard Practice for Mixing and Handling of Liquid Samples of Petroleum and Petroleum Products; First Edition, October 1995; Errata, March 1996; Reaffirmed, March 2015 (''API 8.3''), IBR approved for §§ 3174.102, 3174.157.

(20) API MPMS Chapter 9.1, Standard Test Method for Density, Relative Density, or API Gravity of Crude Petroleum and Liquid Petroleum Products by Hydrometer Method; Third Edition, December 2012; Reaffirmed, May 2017 (''API 9.1''), IBR approved for § 3174.87.

(21) API MPMS Chapter 9.2, Standard Test Method for Density or Relative Density of Light Hydrocarbons by Pressure Hydrometer; Third Edition, December 2012; Reaffirmed, May 2017 (''API 9.2''), IBR approved for § 3174.87.

(22) API MPMS Chapter 9.3, Standard Test Method for Density, Relative Density, and API Gravity of Crude Petroleum and Liquid Petroleum Products by Thermohydrometer Method; Third Edition, December 2012; Reaffirmed, May 2017 (''API 9.3''), IBR approved for § 3174.87.

(23) API MPMS Chapter 10.4, Determination of Water and/or Sediment in Crude Oil by the Centrifuge Method (Field Procedure); Fourth Edition, October 2013; Errata, March 2015 (''API 10.4''), IBR approved for § 3174.85.

(24) API MPMS Chapter 11—Physical Properties Data, Section 1—Temperature and Pressure Volume Correction Factors for Generalized Crude Oils, Refined Products and Lubricating Oils; May 2004, Addendum 1, September 2007; Reaffirmed, August 2012 (''API 11.1''), IBR approved for §§ 3174.90(g), (h), and (i), 3174.120(d), 3174.121(c), 3174.130(f) and (g), 3174.161(b), 3174.162(a).

(25) API MPMS Chapter 12.1.1, Calculation of Static Petroleum Quantities—Upright Cylindrical Tanks and Marine Vessels; Fourth Edition, February 2019 (API 12.1.1), IBR approved for § 3174.161(b).

(26) API MPMS Chapter 12—Calculation of Petroleum Quantities, Section 2—Calculation of Petroleum Quantities Using Dynamic Measurement Methods and Volumetric Correction Factors, Part 2—Measurement Tickets; Third Edition, June 2003; Reaffirmed, February 2016 (''API 12.2.2''), IBR approved for §§ 3174.90(i), 3174.121(c), 3174.130(g), 3174.162(a).

(27) API MPMS Chapter 12—Calculation of Petroleum Quantities, Section 2—Calculation of Petroleum Quantities Using Dynamic Measurement Methods and Volumetric Correction Factors, Part 3—Proving Report; First Edition, October 1998; Reaffirmed, May 2014 (''API 12.2.3''), IBR approved for §§ 3174.105(d), 3174.106(b), 3174.152(c) and (e), 3174.158 introductory paragraph and (a).

(28) API MPMS Chapter 12—Calculation of Petroleum Quantities, Section 2—Calculation of Petroleum Quantities Using Dynamic Measurement Methods and Volumetric Correction Factors, Part 4—Calculation of Base Prover Volumes by the Waterdraw Method; First Edition, December, 1997; Errata, July 2009; Reaffirmed, September 2014 (''API 12.2.4''), IBR approved for § 3174.151(c).

(29) API MPMS Chapter 13. 3, Measurement Uncertainty; Second Edition, December 2017 (''API 13.3''), IBR approved for § 3174.31(a).

(30) API MPMS Chapter 14, Section 3, Orifice Metering of Natural Gas and Other Related Hydrocarbon Fluids—Concentric, Square-edged Orifice Meters, Part 1: General Equations and Uncertainty Guidelines; Fourth Edition, September 2012; Errata, July 2013; Reaffirmed, September 2017 (''API 14.3.1''), IBR approved for § 3174.31(a).

(31) API MPMS Chapter 18—Custody Transfer, Section 1—Measurement Procedures for Crude Oil Gathered From Lease Tanks by Truck; Third Edition, May 2018 (''API 18.1''), IBR approved for §§ 3174.83(b), 3174.88(a).

(32) API MPMS Chapter 21—Flow Measurement Using Electronic Metering Systems, Section 2—Electronic Liquid Volume Measurement Using Positive Displacement and Turbine Meters; First Edition, June 1998; Reaffirmed, October 2016 (''API 21.2''), IBR approved for §§ 3174.90(h), 3174.105(e), 3174.106(c), 3174.120(e), 3174.130(f), 3174.162(b).

(33) API Recommended Practice (RP) 12R1, Setting, Maintenance, Inspection, Operation and Repair of Tanks in Production Service; Fifth Edition, August 1997; Reaffirmed, April 2008; Addendum 1, December 2017 (''API RP 12R1''), IBR approved for § 3174.80(a).

(34) API RP 2556, Correction Gauge Tables for Incrustation; Second Edition, August 1993; Reaffirmed, November 2013 (''API RP 2556''), IBR approved for § 3174.82(a).

Note 1 to paragraph (b): You may also be able to purchase these standards from the following resellers: Techstreet, 3916 Ranchero Drive, Ann Arbor, MI 48108; telephone 734–780–8000; *www.techstreet.com/api/apigate.html;* IHS Inc., 321 Inverness Drive South, Englewood, CO 80112; 303–790–0600; *www.ihs.com;* SAI Global, 610 Winters Avenue, Paramus, NJ 07652; telephone 201–986–1131; *http://infostore.saiglobal.com/store/.*

§ 3174.31 Specific measurement performance requirements.

(a) *Volume measurement uncertainty levels.* (1) The FMP must achieve the following overall uncertainty levels as calculated in accordance with statistical methodologies in API 13.3, and the quadrature sum (square root of the sum of the squares) method described in API 14.3.1, Subsection 12.3 (both incorporated by reference, see § 3174.30):

TABLE 1 TO § 3174.31(a)(1): VOLUME MEASUREMENT UNCERTAINTY LEVELS

FMP category	If the averaging period volume (see definition 43 CFR 3170.3) is:	The overall volume measurement uncertainty must be within:
Very-high-volume	1. Greater than or equal to 15,000 bbl/month	±0.50 percent
High-volume	2. Greater than 1,500 but less than 15,000 bbl/month	±1.50 percent
Low-volume	3. Less than or equal to 1,500 bbl/month	N/A

(2) A BLM State Director may grant an exception to the uncertainty levels prescribed in paragraph (a)(1) of this section, but only upon:

(i) A showing that meeting the required uncertainly level would involve extraordinary cost or

unacceptable adverse environmental impacts; and

(ii) Written concurrence of the PMT, prepared in coordination with the BLM Director or his or her delegate.

(b) *Bias.* The measuring equipment used for volume determinations must achieve measurement without statistically significant bias.

(c) *Verifiability.* All FMP equipment must be susceptible to independent verification by the BLM of the accuracy and validity of all inputs, factors, and equations that are used to determine quantity or quality. Verifiability includes the ability to independently recalculate volume and quality based on source records.

§ 3174.40 Approved measurement equipment and data requirements.

Sections 3174.41 through 3174.43 list the following:

(a) Equipment that requires BLM approval before operators may use it at an FMP;

(b) Approved equipment that operators may use at an FMP if that equipment meets the requirements of this subpart; and

(c) Information that this subpart requires operators to submit to the BLM.

§ 3174.41 Measurement equipment requiring BLM approval.

Except as provided in § 3174.50, the following equipment requires BLM approval prior to use, and must appear on the list of PMT-reviewed and BLM-approved equipment maintained at *www.blm.gov.* BLM approval will be based upon a showing that the equipment meets or exceeds the performance requirements of § 3174.31. To obtain approval, the applicant must submit an application to the PMT. Recommended testing procedures will be listed at *www.blm.gov.*

(a) Automatic tank gauge (ATG) (see § 3174.88(b)(1));

(b) LACT sampling systems (see § 3174.102);

(c) Positive displacement meters (see § 3174.104);

(d) Coriolis meters (see § 3174.104 and § 3174.110(a));

(e) Coriolis transmitters (see § 3174.104 and § 3174.110(b));

(f) Stand-alone temperature averaging devices (see § 3174.105(a));

(g) Temperature transducers (see § 3174.105(b));

(h) Pressure transducers (see § 3174.106(a));

(i) Flow computers and installed particular software versions (see § 3174.120(a));

(j) Portable electronic thermometers (see § 3174.86(c));

(k) Measurement data systems (see § 3174.121(a)); and

(l) Temporary measurement (see § 3174.140).

§ 3174.42 Approved measurement equipment.

The following equipment is approved for use if it meets the requirements specified in this subpart:

(a) Centrifuge tubes (see § 3174.85);

(b) Liquid-in-glass thermometers (see § 3174.86);

(c) Hydrometers and thermohydrometers (see § 3174.87); and

(d) Manual gauging tapes (see § 3174.88(a)).

§ 3174.43 Data submission and notification requirements.

(a) Operators must submit the following information to the BLM using a Sundry Notice:

(1) Notification to the AO of the date an FMP begins voluntary early compliance with this subpart (see § 3174.60(b)(3));

(2) FMP tank calibration charts (tank tables) (see § 3174.82(d));

(3) Notification after repair of any LACT system failures or equipment malfunctions that may have resulted in measurement error (see § 3174.90(e)(1));

(4) Justification for excessive meter factor deviation (see § 3174.154(a));

(5) Prior AO approval to sell or dispose of slop oil (see § 3174.180(c)); and

(6) Notification of the volume of slop oil sold or disposed of and the method used to compute the volume (see § 3174.180(c)).

(b) Operators must submit the following information to the BLM upon request of the AO:

(1) ATG Field verification log (see § 3174.88(b)(4));

(2) Coriolis meter zero value verification procedure (see § 3174.110(e));

(3) Log of all meter factors, zero verifications, and zero adjustments (see § 3174.110(e));

(4) ELM Audit trail data including QTR, configuration log, event log, and alarm log (see § 3174.120(d));

(5) Meter proving report (see § 3174.158(c)); and

(6) Measurement tickets (see § 3174.160).

§ 3174.50 Grandfathering.

(a) The equipment listed in § 3174.41(a) through (i) and installed or used at a high- or low-volume FMP prior to [EFFECTIVE DATE OF FINAL RULE] is exempt from the approval requirements in § 3174.41.

(b) For any high- or low-volume FMP, if any of the equipment listed in § 3174.41(a) through (i) is replaced after [EFFECTIVE DATE OF FINAL RULE], it is no longer exempt from the approval requirement in § 3174.41.

(c) Any high- or low-volume FMP that changes category and becomes a very-high-volume FMP is no longer exempt from the approval requirements in § 3174.41.

(d) Portable electronic thermometers, measurement data systems, and temporary measurement are not subject to the exemption provided for in paragraph (a) and must be approved by the BLM prior to use.

§ 3174.60 Timeframes for compliance.

(a) All equipment used to measure the volume and quality of oil for royalty purposes at an FMP installed after January 17, 2017, must comply with the requirements of this subpart starting [EFFECTIVE DATE OF FINAL RULE].

(b) All equipment and measuring procedures used to measure the volume and quality of oil for royalty purposes that were in use before January 17, 2017, must comply with the requirements of this subpart as follows:

(1) Very-high-volume FMPs must comply starting [DATE ONE YEAR AFTER EFFECTIVE DATE OF FINAL RULE];

(2) High-volume and low-volume FMPs must comply starting [DATE TWO YEARS AFTER EFFECTIVE DATE OF FINAL RULE]; or

(3) An operator may voluntarily begin full compliance with the requirements of this subpart at any FMP prior to the mandatory compliance dates specified in paragraphs (b)(1) and (2) of this section. The operator must notify the AO within 30 days by Sundry Notice of the date the FMP began early compliance.

(c) Prior to the compliance time frames identified in paragraph (b) of this section, measurement procedures and equipment used to measure oil for royalty purposes that were in use prior to January 17, 2017, must continue to comply with the requirements of Onshore Oil and Gas Order No. 4, Measurement of Oil, and any COAs, written orders, and variances applicable to that equipment.

(d) All requirements and standards related to measurement of oil established by Onshore Oil and Gas Order No. 4, Measurement of Oil, and any COAs, written orders, and variances based on Onshore Oil and Gas Order No. 4 are rescinded as of the compliance time frames identified in paragraph (b) of this section.

(e) Equipment approvals under § 3174.41 will be required after [DATE

TWO YEARS AFTER EFFECTIVE DATE OF FINAL RULE].

§ 3174.70 Measurement location.

(a) *Commingling and allocation.* Oil produced from a lease, unit PA, or CA may not be commingled with production from other leases, unit PAs, or CAs or non-Federal properties before the point of royalty measurement, unless prior approval is obtained under §§ 3173.70 and 3173.71 of this part.

(b) *Off-lease measurement.* Oil must be measured on the lease, unit PA, or CA, unless approval for off-lease measurement is obtained under §§ 3173.90 and 3173.91 of this part.

§ 3174.80 Oil storage tank equipment.

(a) Each tank used for oil storage must comply with the recommended practices listed in API RP 12R1, Subsection 4 (incorporated by reference, see § 3174.30).

(b) Each oil storage tank must be connected, maintained, and operated in compliance with §§ 3173.20, 3173.31, and 3173.32 of this part.

(c) All oil storage tanks, hatches, connections, and other access points must be vapor tight. Unless connected to a vapor recovery or flare system, all tanks must have a pressure-vacuum relief valve installed at the highest point in the vent line or connection with another tank. All hatches, connections, and other access points must be installed and maintained in accordance with manufacturers' specifications.

(d) All oil storage tanks must be clearly identified and have an operator-generated number unique to the lease, unit PA, or CA, stenciled on the tank and maintained in a legible condition.

(e) Each oil storage tank associated with an FMP that has a tank-gauging system must be set and maintained level.

(f) Each oil storage tank associated with an FMP that has a tank-gauging system must be equipped with a distinct gauging reference point consistent with the definition found in API 3.1A, Subsection 3.14 (incorporated by reference, see § 3174.30). The height of the reference point must be stamped on a fixed bench-mark plate or stenciled on the tank near the gauging hatch, and be maintained in a legible condition.

§ 3174.81 Oil measurement by tank gauging.

Oil measurement by tank gauging must accurately compute the total net standard volume of oil withdrawn from a properly calibrated FMP tank by following §§ 3174.82 through 3174.88 and 3174.31 to determine the quantity and quality of oil being removed.

§ 3174.82 Oil tank calibration.

(a) The operator must accurately calibrate each oil storage tank associated with an FMP that has a tank-gauging system using API 2.2A, API 2.2B, or API 2.2C, and API RP 2556 (all incorporated by reference, see § 3174.30).

(b) The operator must determine FMP tank capacity tables by tank calibration using actual tank measurements.

(1) The unit volume must be in barrels (bbl);

(2) The incremental height measurement must match the gauging increments specified in § 3174.87(a)(3);

(3) The tank capacity tables must be calculated for a tank shell temperature of 60 °F; and

(4) FMP tank capacity tables must be recalculated if the reference gauge point is changed.

(c) An FMP tank must be recalibrated if it is relocated or repaired, or the capacity is changed as a result of denting, damage, installation, removal of interior components, or other alterations; and

(d) FMP tank calibration charts (tank tables) must be submitted to the AO by Sundry Notice within 45 days after calibration or recalculation of charts.

§ 3174.83 Tank-gauging procedures.

(a) The procedures for oil measurement by tank gauging must comply with the requirements outlined in this section and §§ 3174.83 through 3174.88 to determine the quality and quantity of oil measured under field conditions at an FMP.

(b) The operator must follow the operation sequence identified in API 18.1, Subsection 6 (incorporated by reference, see § 3174.30).

(c) During field operations, operators must obtain and document the data required under § 3174.161(a).

(d) The operator must isolate the tank for at least 30 minutes to allow contents to settle before proceeding with tank gauging operations. The tank isolating valves must be closed and sealed as required under § 3173.20 of this part.

(e) After transfer is complete, the operator must close the tank valve and seal the valve as required under §§ 3173.20 and 3173.30 of this part.

§ 3174.84 Tank oil sampling.

Sampling operations must be conducted prior to taking the opening gauge, except where the BLM approves an automatic sampling system or alternative process. Oil sampling operations conducted on an FMP tank must yield a representative sample of the oil and its physical properties and must comply with the provisions in API 8.1 pertaining to sampling from storage tanks (incorporated by reference, see § 3174.30).

§ 3174.85 Determining S&W content.

Using the oil samples obtained under § 3174.84, the operator must determine the S&W content of the oil in the tank, according to API 10.4 (incorporated by reference, see § 3174.30).

§ 3174.86 Tank oil temperature determination.

When determining the temperature of oil contained in an FMP tank, the operator must comply with paragraphs (a) through (d) of this section, API 7.1, Subsections 6.1 through 6.2 and Subsections 7.1 through 7.1.2.2, or API 7.2, Subsections 7.1 through 7.2.2 and 7.2.5 through 7.2.9 (both incorporated by reference, see § 3174.30).

(a) For tanks less than 5,000 bbl nominal capacity, a single temperature measurement at the middle of the liquid may be used.

(b) Glass thermometers must be clean, be free of fluid separation, have a minimum graduation of 1.0 °F, and have an accuracy of ±0.5 °F. Refer to API 7.1, Subsection 6.1.1.3 (incorporated by reference, see § 3174.30) for allowable American Society for Testing and Materials (ASTM) tank thermometers meeting these requirements.

(c) Electronic thermometers must have a minimum graduation of 0.1 °F and have an accuracy of ±0.5 °F. The specific makes and models of electronic thermometers identified and described at *www.blm.gov* are approved for use. If an electronic thermometer is used, a flow-weighted average can be used in lieu of a single-point opening and closing temperature.

(d) Record the temperature to the nearest 1.0 °F for glass thermometers or 0.1 °F for electronic thermometers.

§ 3174.87 Observed oil gravity determination.

Tests for oil gravity must comply with paragraphs (a) through (c) of this section and API 9.1, API 9.2, or API 9.3 (all incorporated by reference, see § 3174.30).

(a) The hydrometer or thermohydrometer (as applicable) must be calibrated for an oil gravity range that includes the observed gravity of the oil sample being tested and must be clean, with a clearly legible oil gravity scale and with no loose shot weights.

(b) Allow the temperature to stabilize for at least 5 minutes prior to reading the thermometer.

(c) Read and record the observed API oil gravity to the nearest 0.1 degree. Read and record the temperature reading to the nearest 1.0 °F.

§ 3174.88 Measuring tank fluid level.

The operator must take and record the opening gauge only after samples have been taken. Gauging must comply with either paragraph (a) of this section for manual gauging, or paragraph (b) of this section for automatic tank gauging.

(a) For manual innage gauging, the operator must comply with the requirements of API 3.1A, Subsections 4.1 through 4.2.2.3 and 5.1 through 5.4, and API 18.1, Subsection 6.8 (both incorporated by reference, see § 3174.30) and the following:

(1) A proper innage-gauging bob must be used;

(2) A gauging tape must be used. The gauging tape must be made of steel or corrosion-resistant material with graduation clearly legible, and must not be kinked or spliced;

(3) The operator must either obtain two consecutive identical gauging measurements for any tank regardless of size, or:

(i) For tanks of 1,000 bbl or less in nominal capacity, obtain three consecutive measurements that are within 1/4 inch of each other and average these three measurements to the nearest 1/4 inch; or

(ii) For tanks greater than 1,000 bbl in nominal capacity, obtain three consecutive measurements within 1/8 inch of each other, averaging these three measurements to the nearest 1/8 inch.

(4) A suitable product-indicating paste may be used on the tape to facilitate the reading. The use of chalk or talcum powder is prohibited.

(b) For automatic tank gauging (ATG), comply with the requirements of API 3.1B, and API 3.6, Subsection 6.2, (both incorporated by reference, see § 3174.30) and the following:

(1) The specific makes and models of ATG that are identified and described at *www.blm.gov* are approved for use;

(2) The ATG must be installed per the requirements of API 3.1B, Subsections 5, 6, and 7 (incorporated by reference, see § 3174.30), the manufacturer's recommendations, and any COAs from the BLM equipment approval;

(3) The ATG must be inspected and its accuracy verified to within ±1/4 inch in for tanks of 1,000 bbl or less in nominal capacity or within ±1/8 inch for tanks greater than 1,000 bbl in nominal capacity in accordance with procedures outlined in API 3.1B, Subsection 9 (incorporated by reference, see § 3174.30) prior to FMP measurement, but no more frequently than monthly, or any time at the request of the AO. If the ATG is found to be out of the manufacturer's tolerance, the ATG must be calibrated prior to FMP measurement;

(4) A detailed log of field verifications must be maintained and available upon request. The log must be in compliance with § 3170.50(g) of this part and include the following information: The date of verification; the as-found manual gauge readings; the as-found ATG readings; and whether the ATG was field calibrated. If the ATG was field calibrated, the as-left manual gauge readings and as-left ATG readings must be recorded; and

(5) The date of last ATG field verification must be maintained at the FMP in legible condition, in compliance with § 3170.50(g) of this part, and accessible to the AO at all times.

§ 3174.90 LACT system—general requirements.

(a) A LACT system must meet the construction and operation requirements and minimum standards of this section and §§ 3174.31 and 3174.100.

(b) A LACT system must be proven as prescribed in § 3174.150.

(c) All components of a LACT system must be accessible for inspection by the AO.

(d) Automatic temperature compensators and automatic temperature and gravity compensators are prohibited and are not grandfathered equipment under § 3174.50.

(e) The operator must notify the AO by Sundry Notice within 30 days after repair of any LACT system failures or equipment malfunctions that may have resulted in measurement error. Such system failures or equipment malfunctions include, but are not limited to, electrical, meter, and other failures that affect oil measurement.

(f) Any tests conducted on oil samples extracted from LACT system samplers for determination of S&W content and observed oil gravity must meet the requirements and minimum standards in §§ 3174.85 and 3174.87.

(g) The average temperature for the measurement ticket must be calculated for the measurement period covered under the measurement ticket and must be the temperature used to calculate the CTL correction factor using API 11.1 (incorporated by reference, see § 3174.30).

(h) The pressure for the measurement ticket must be determined by:

(1) A direct reading of the installed pressure gauge; or,

(2) If the LACT is equipped with an ELM system or an automatic adjusting back-pressure control, then the system must utilize a pressure transducer. If using a pressure transducer, the average pressure must be calculated beginning when the measurement ticket was opened. The average pressure must be calculated by the volumetric averaging method using API 21.2, Subsection 9.2.13.2a (incorporated by reference, see § 3174.30) and must be used to calculate the CPL correction factor using API 11.1. (incorporated by reference, see § 3174.30).

(i) Calculate the net standard volume of each measurement ticket following API 11.1 and API 12.2.2, Subsections 9, 10, and 11 (incorporated by reference, see § 3174.30) or any other BLM-approved methods.

(j) Measurement tickets must be completed under § 3174.162.

§ 3174.100 LACT system—components and operating requirements.

Unless otherwise approved, each LACT system must include all of the equipment listed in §§ 3174.101 through 3174.108 and LACT operation must meet the requirements of §§ 3174.101 through 3174.108.

§ 3174.101 Charging pump and motor.

Where the static head is insufficient to provide a net positive suction head for desired fluid pressure and flowrates, the LACT system must include an electrically-driven charge pump that has a discharge pressure rate compatible with the meter used and is sized to assure turbulent flow in the LACT main stream piping.

§ 3174.102 Sampling and mixing system.

Sampling and mixing systems that are identified and described at *www.blm.gov* are approved for use. Sampling and mixing must be conducted in accordance with API 8.2 and API 8.3 (both incorporated by reference, see § 3174.30) and the following:

(a) The sample extractor probe must:

(1) Be inserted within the center half of the flowing stream;

(2) Be horizontally oriented; and

(3) Have external markings that show the orientation of the probe in relation to fluid flow direction.

(b) Sampling frequency must be proportioned to the flow rate through the meter and must be based on maximizing the number of grabs for the composite-sample container for the measurement period;

(c) The composite-sample container must be capable of holding the sample under pressure, must be equipped with a vapor-proof top closure, and must be operated to prevent the unnecessary escape of vapor. The composite sample container must be emptied and cleaned upon completion of sample withdrawal and when closing a run ticket; and

(d) The mixing system must completely blend the sample (inside the

composite sample container) into a homogeneous mixture before and during the withdrawal of a portion of the sample for testing.

§ 3174.103 Air eliminator.

An air eliminator must be installed to prevent air or gas from entering the meter. The air eliminator may be integrated with an optional strainer.

§ 3174.104 LACT meter.

The LACT meter must be a positive displacement meter, a Coriolis meter (see § 3174.110), or other meter approved by the BLM. The specific make, models, and sizes of positive displacement, Coriolis meter, Coriolis transmitter, or other approved meters that are identified and described at *www.blm.gov* are approved for use.

(a) The LACT meter must be equipped with a non-resettable totalizer. The non-resettable totalizer display may reside in an electronic flow computer.

(b) The LACT meter must include or allow for the attachment of a device that generates at least 8,400 pulses per barrel of registered volume.

§ 3174.105 Electronic temperature averaging device.

The electronic temperature averaging device may be a stand-alone device or a function of a flow computer and must be installed, operated, and maintained as follows:

(a) The specific makes and models of stand-alone electronic temperature averaging devices that are identified and described at *www.blm.gov* are approved for use.

(b) The specific makes and models of temperature transducers that are identified and described at *www.blm.gov* are approved for use.

(c) The temperature thermowell and transducer must be installed no further than 5 pipe diameters downstream from the meter, in compliance with API 7.4, Subsections 6.3 and 7.2 (incorporated by reference, see § 3174.30);

(d) The temperature averaging device must have a reference accuracy of ±0.5 °F or better, and have a minimum display discrimination level in accordance with API 12.2.3, Subsection 11.2, table 3 (incorporated by reference, see § 3174.30);

(e) The electronic temperature averaging device must be volume-weighted and take a temperature reading following API 21.2, Subsection 9.2.8 (incorporated by reference, see § 3174.30); and

(f) The temperature averaging device must include a display of instantaneous temperature and the average temperature calculated since the measurement ticket was opened. The display may be a function of an electronic flow computer.

§ 3174.106 Pressure-indicating device.

The pressure-indicating device may be either a pressure gauge or pressure transducer and must be installed, operated, and maintained as follows:

(a) The system must have a pressure-indicating device located downstream of the meter, but on the upstream side of the first valve of the prover connection. The pressure-indicating device must be capable of providing pressure data to calculate the CPL correction factor. The specific makes and models of pressure transducers that are identified and described at *www.blm.gov* are approved for use.

(b) The pressure-indicating device must have a minimum display discrimination level in accordance with API 12.2.3, Subsection 11.2, table 4 (incorporated by reference, see § 3174.30); and

(c) If a pressure transducer is used, it must be used in conjunction with an electronic pressure-averaging device. A pressure-averaging device may be a function of a flow computer:

(1) The electronic pressure averaging device must include a display of instantaneous pressure and the average pressure calculated since the measurement ticket was opened. The display may be a function of an electronic flow computer; and

(2) The electronic pressure averaging device must be volume-weighted and take a pressure reading in accordance with API 21.2, Subsection 9.2.8 (incorporated by reference, see § 3174.30).

§ 3174.107 Meter-proving connections.

All meter-proving connections must be installed downstream from the LACT meter and upstream of back-pressure control. The line valve(s) must be installed between the inlet and outlet of the prover loop and must be configured with a double block and bleed design feature to provide for leak testing during proving operations. All valves must be full opening valves.

§ 3174.108 Back-pressure and check valves.

The back-pressure and check valves must be installed downstream from the meter-proving connections. Back pressure must be applied by either a back-pressure valve or other controllable means of applying back pressure. Back pressure may be maintained by an automatic-adjusting back-pressure control to adjust for changing flowing conditions. Back-pressure control must maintain a pressure that is above the bubble point of the liquid to prevent the formation of vapor, ensuring single phase flow.

§ 3174.110 Coriolis meter operating requirements.

(a) The specific makes, models, and sizes of Coriolis meters that are identified and described at *www.blm.gov* are approved for use.

(b) The specific makes and models of Coriolis transmitters that are identified and described at *www.blm.gov* are approved for use.

(c) The Coriolis meter must register the volume of oil passing through the meter as determined by a system that constantly emits electronic pulse signals representing the indicated volume measured. The pulse per unit volume must be set at a minimum of 8,400 pulses per barrel.

(d) The Coriolis meter must have a non-resettable internal totalizer for indicated volume. The non-resettable totalizer display may reside in an electronic flow computer, but must be generated from the Coriolis meter. A flow-computer-generated totalizer does not comply with the requirements of this subpart.

(e) Meter zero verification must be conducted during the proving process, or any time the AO requests it. If the indicated flow rate is within the manufacturer's specifications for zero stability, no adjustments are required. If the indicated flow rate is outside the manufacturer's specification for zero stability, the meter's zero reading must be adjusted. After the meter's zero reading has been adjusted, the meter must be proven as required by § 3174.150. A copy of the zero value verification procedure must be made available to the AO upon request. A log must be maintained of all meter factors, zero verifications, and zero adjustments. For zero adjustments, the log must include the zero value before adjustment and the zero value after adjustment. The log must be made available to the AO upon request.

(f) The required on-site information may be displayed on a Coriolis meter display or may reside in an electronic flow computer. The display must provide the following information:

(1) The display must be readable without using data-collection units, laptop computers, or any special equipment, and must be on-site and accessible to the AO;

(2) For each Coriolis meter, the following values and corresponding units of measurement must be displayed on the device or the ELM display:

(i) The instantaneous density of liquid (pounds/bbl, pounds/gal, or degrees API);

(ii) The instantaneous indicated volumetric flow rate through the meter (bbl/day);

(iii) The meter factor;

(iv) The cumulative indicated volume through the meter (non-resettable totalizer) (bbl); and

(v) The previous day's indicated volume through the meter (bbl).

§ 3174.120 Electronic liquids measurement system, ELM (secondary and tertiary device).

Any FMP with an ELM installed must comply with the requirements of this section. An ELM is required on all very-high-volume FMPs, and all CMS regardless of FMP category.

(a) The specific makes and models of flow computers and software versions that are identified and described at *www.blm.gov* are approved for use.

(b) For each ELM, the following values and corresponding units of measurement must be displayed:

(1) The instantaneous density of liquid (pounds/bbl, pounds/gal, or degrees API);

(2) The instantaneous indicated volumetric flow rate through the meter (bbl/day);

(3) The meter factor;

(4) The instantaneous pressure (psi);

(5) The instantaneous temperature (°F);

(6) The average temperature calculated since the measurement ticket was opened;

(7) The cumulative indicated volume through the meter (non-resettable totalizer) (bbl); and

(8) The previous day's indicated volume through the meter (bbl).

(c) The following information must be correct, must be maintained in a legible condition, and must be accessible to the AO at the FMP without the use of data-collection equipment, laptop computers, or any special equipment:

(1) The make, model, and size of each sensor; and

(2) The make, model, range, and calibrated span of the pressure and temperature transducer used to determine gross standard volume.

(d) Calculated volumetric output of the ELM must incorporate the meter factor and correct for CTL and CPL in accordance with API 11.1 (incorporated by reference, see § 3174.30).

(e) The information specified in paragraphs (e)(1) through (4) of this section must be recorded and retained under the recordkeeping requirements of § 3170.50(g) of this part. The audit trail must comply with API 21.2, Subsection 10 (incorporated by reference, see § 3174.30). All data must be available and submitted to the BLM upon request.

(1) Quantity transaction record (QTR): Retention of QTR data must be on a daily (24-hour) basis, except in circumstances where batch delivery duration is less than 24 hours. In these situations, hourly data retention is required. The QTR must follow the requirements for a measurement ticket in § 3174.162.

(2) Configuration log: The configuration log must comply with the requirements of API 21.2, Subsection 10.2 (incorporated by reference, see § 3174.30). The configuration log must contain and identify all constant flow parameters used in generating the QTR.

(3) Event log: The event log must comply with the requirements of API 21.2, Subsection 10.6 (incorporated by reference, see § 3174.30). In addition, the event log must be of sufficient capacity to record all events such that the operator can retain the information under the recordkeeping requirements of § 3170.50(g) of this part.

(4) Alarm log: The type and duration of any of the following alarm conditions must be recorded:

(i) Deviations from acceptable density parameters for Coriolis flow meters;

(ii) Instances in which the flow rate exceeded the manufacturer's maximum recommended flow rate or was below the manufacturer's minimum recommended flow rate;

(iii) Instances in which the temperature of the fluid exceeded the calibrated span of the temperature transmitter;

(iv) Instances in which the pressure of the fluid exceeded the calibrated span of the pressure transmitter;

(v) Any power loss to the meter or instance in which the ELM no longer detects the meter output; and

(vi) Instances in which any other meter output exceeds its user-defined span of operation.

(5) The alarm log may be part of the event log and fulfill the requirements of this subpart, as long as protections are in place to ensure that excessive alarming will not affect the event log's compliance with the record-keeping requirements of this subpart.

(f) Each ELM must have installed and maintained in an operable condition a backup power supply or a nonvolatile memory capable of retaining all required raw data in the unit's memory for at least 35 days to ensure that the audit-trail information required under paragraph (e) of this section is protected.

§ 3174.121 Measurement data system (MDS).

(a) The specific MDS that are identified (by name and version) and described at *www.blm.gov* are approved for use. MDS are not grandfathered under § 3174.50.

(b) The MDS must comply with the recordkeeping requirements of § 3170.50(g) of this part.

(c) The MDS must calculate net standard volume in accordance with API 11.1 and API 12.2.2, Subsections 9, 10 and 11 (both incorporated by reference, see § 3174.30) or other methods approved by the BLM.

(d) The MDS must maintain and preserve the raw data from the primary and secondary elements of the system as well as clearly show edits and corrections made by the user.

§ 3174.130 Coriolis measurement systems (CMS)—general requirements and components.

This section applies to Coriolis measurement applications independent of LACT measurement systems.

(a) A CMS must meet the requirements and minimum standards of this section and §§ 3174.31 and 3174.110.

(b) A CMS must be equipped with an ELM system meeting the requirements of § 3174.120.

(c) A CMS system must be proven in compliance with § 3174.150.

(d) CMS measurement tickets must be completed under § 3174.162.

(e) A CMS at an FMP must be installed with the components listed in API 5.6, Subsection 6.3 (incorporated by reference, see § 3174.30). Additional requirements are as follows:

(1) The pressure transducer must meet the requirements of § 3174.106(a), (b), and (c);

(2) Temperature determinations must meet the requirements of § 3174.105(b) and (c);

(3) If nonzero S&W content is to be used in determining net oil volume, the sampling system must meet the requirements of § 3174.102 and any tests conducted on oil samples for determination of S&W content must meet the requirements of § 3174.85. If no sampling system is used, or the sampling system does not meet the requirements of § 3174.102, the S&W content must be reported as zero;

(4) Sufficient back pressure must be applied to ensure single-phase flow through the meter; and

(5) Block valves must be present at both ends of the system to allow for a zero-flow verification.

(f) The API oil gravity reported for the measurement-ticket period must be

determined by one of the following methods:

(1) Determined from a composite sample taken pursuant to § 3174.87; or,

(2) Calculated from the average density as measured by the CMS over the measurement-ticket period under API 21.2, Subsection 9.2.13.2a (incorporated by reference, see § 3174.30). Density must be corrected to base temperature and pressure using API 11.1 (incorporated by reference, see § 3174.30).

(g) Calculate the net standard volume at the close of each measurement ticket following the guidelines in API 11.1 and API 12.2.2, Subsections 9, 10 and 11 (both incorporated by reference, see § 3174.30) or any method approved by the BLM identified and described at *www.blm.gov.*

(h) If the CMS is mounted on a truck or trailer that travels between locations, referred to as a Truck-Mounted Coriolis (TMC), the unit must meet all requirements of the CMS, subject to the following special considerations:

(1) The TMC is required to meet the performance requirements of a very-high-volume FMP;

(2) The meter factor used during the truck load at an FMP must be derived from a prove that is within the defined ''normal operating conditions'' of § 3174.150 for that location;

(3) The display and on-site information requirements of the CMS only apply when the TMC is at that location;

(4) The proving frequency will be based on the total volume passing through the TMC meter, not the volume at any specific location, and will include non-Federal or non-tribal volumes that may have passed through the meter;

(5) The notification requirements of the proving must be followed, including the ability for a BLM representative to witness the prove, even if the proving is not carried out on a BLM location;

(6) The operator must make available, at the request of an AO, data for non-Federal and non-tribal transfers, in which the TMC was used so that a full audit can be conducted (such data may be de-identified);

(7) The sales line between the TMC and the sales valve at the FMP must be connected before the seal is broken on the valve;

(8) The seal on the sales valve must be replaced at the end of each truck load using a TMC (multi-truck loads without seal replacement are prohibited);

(9) The operator must show the TMC will be able to comply with the audit trail requirements of § 3173; and

(10) Any variations from these requirements are considered alternative methods of measurement and will require PMT review and BLM approval.

§ 3174.140 Temporary measurement.

Measurement equipment at any temporary measurement facility must meet the requirements of this subpart, subject to the following special considerations:

(a) Temporary measurement facilities must meet the performance requirements of very-high-volume FMPs;

(b) Any temporary measurement facility that meets the definition of LACT or CMS must be proved on the location within 72 hours of first flow through the meter. If the meter is on location for less than 72 hours, it must be proved so a meter factor can be established before it is removed from service; and

(c) Any temporary measurement facility must be identified as such and provide a unique identification number that can be tied to the location for all records.

§ 3174.150 Meter-proving requirements.

Sections 3174.151 through 3174.158 specify the minimum requirements for conducting volumetric meter proving for all FMP meters.

§ 3174.151 Meter prover.

Acceptable provers are positive-displacement master meters, Coriolis master meters, and displacement provers, or other provers approved by the BLM and identified and described at *www.blm.gov.* The operator must ensure that the meter prover used to determine the meter factor has a valid certificate of calibration on site and available for review by the AO. The certificate must show that the prover, identified by the serial number assigned to and inscribed on the prover, was calibrated as follows:

(a) Master meters must have a meter factor within 0.9900 to 1.0100 as determined by a minimum of five consecutive prover runs within 0.0005 (0.05 percent repeatability) as described in API 4.5, Subsection 6.5, Table 2 (incorporated by reference, see § 3174.30). The master meter must not be mechanically compensated for oil gravity or temperature; its readout must indicate units of volume without corrections. The meter factor must be documented on the calibration certificate and must be calibrated at least once every 12 months. New master meters must be calibrated immediately and recalibrated in 3 months. Master meters that have undergone mechanical repairs, alterations, or changes that affect the calibration must be calibrated immediately upon completion of this work and calibrated again 3 months after this date in accordance with API 4.8, Annex B.2 (incorporated by reference, see § 3174.30).

(b) Displacement provers must meet the requirements of API 4.2 (incorporated by reference, see § 3174.30) and be calibrated using the water-draw method under API 4.9.2 (incorporated by reference, see § 3174.30), at the calibration frequencies specified in API 4.8, Subsection 10.1(b) (incorporated by reference, see § 3174.30).

(c) The base prover volume of a displacement prover must be calculated in accordance with API 12.2.4 (incorporated by reference, see § 3174.30).

(d) Displacement provers must be sized to obtain a displacer velocity through the prover that is within the appropriate range during proving in accordance with API 4.2, Subsection 4.3.4.2, Minimum Displacer Velocities and Subsection 4.3.4.1, Maximum Displacer Velocities (incorporated by reference, see § 3174.30).

(e) Fluid velocity must be calculated using API 4.2, Subsection 4.3.4.3, Equation 12 (incorporated by reference, see § 3174.30).

§ 3174.152 Meter-proving runs.

Meter proving must follow the applicable section(s) of API 4.1, Proving Systems (incorporated by reference, see § 3174.30).

(a) Meter proving must be performed under normal operating conditions. The normal operating condition will be established by the flow rate, fluid pressure, fluid temperature, and fluid gravity, at the time of proving. These established normal operating conditions will be in effect until the next proving. Except for impacts from any routine activities, such as pipeline pigging operations or temporary interruptions not lasting more than 3 consecutive days or any 7 days total within the proving period cycle, the flow rate, fluid pressure, fluid temperature, and fluid gravity, must remain in the following ranges or the conditions for normal operating will no longer be met and a new proving is required:

(1) The oil flow rate through the LACT or CMS must remain within 10 percent of the flow rate established during the proving;

(2) The pressure as measured by the LACT or CMS must remain within 10 percent of the pressure established during the proving. Back pressure may be adjusted after prover connection,

prior to proving to establish the normal condition;

(3) The temperature as measured by the LACT or CMS must remain within 10 °F of the operating temperature established during the proving; and

(4) The gravity of the oil must remain within 5 degrees API of the oil gravity established during the proving.

(b) If each proving run is not of sufficient volume to generate at least 10,000 pulses, as specified by API 4.2, Subsection 4.3.2.1 (incorporated by reference, see § 3174.30), from the positive displacement meter or the Coriolis meter, then pulse interpolation must be used in accordance with API 4.6, Pulse Interpolation (incorporated by reference, see § 3174.30).

(c) Proving runs must be made until the calculated meter factor or meter generated pulses from five consecutive runs match within a tolerance of 0.0005 (0.05 percent) between the highest and the lowest value in accordance with API 12.2.3, Subsection 9 (incorporated by reference, see § 3174.30), or from any of the number of runs indicated in API 4.8 Table A.1 (incorporated by reference, see § 3174.30) that will result in the 0.027 percent uncertainty repeatability criteria.

(d) The new meter factor is the arithmetic average of the meter-generated pulses or intermediate meter factors calculated from the proving runs under paragraph (c) of this section.

(e) Meter factor computations must follow the sequence described in API 12.2.3, Subsection 12 (incorporated by reference, see § 3174.30).

(f) The meter factor must be at least 0.9900 and no more than 1.0100.

(g) The initial meter factor for a new or repaired meter must be at least 0.9950 and no more than 1.0050.

(h) If multiple meter factors are determined over a range of normal operating conditions, then:

(1) If all the meter factors determined over a range of conditions fall within 0.0020 of each other, then a single meter factor may be calculated for that range as the arithmetic average of all the meter factors within that range. The full range of normal operating conditions may be divided into segments such that all the meter factors within each segment fall within a range of 0.0020. In this case, a single meter factor for each segment may be calculated as the arithmetic average of the meter factors within that segment; or

(2) The metering system may apply a dynamic meter factor derived (*e.g.,* using linear interpolation, polynomial fit, etc.) from the series of meter factors determined over the range of normal operating conditions, so long as no two neighboring meter factors differ by more than 0.0020.

(i) Composite meter factors may only be used with a fixed-setting, back-pressure system. If a composite meter factor is calculated, the CPL value used must be calculated from the fluid flowing pressure at the conclusion of the proving operations, after the prover has been disconnected and all back-pressure adjustments are completed. After the prover has been disconnected and the fixed back-pressure setting has been adjusted, the back-pressure valve must be sealed under § 3173.21 of this part.

§ 3174.153 Minimum proving frequency.

The operator must prove any FMP meter before removal or sales of production after any of the following events:

(a) Within 15 days of the first flow after installation of the FMP;

(b) Every 3 months (quarterly) after the last proving, or each time the registered volume flowing through the meter, as measured on the non-resettable totalizer from the last proving, increases by 75,000 bbl, whichever comes first, but no more frequently than monthly;

(c) Meter zeroing (Coriolis meter);

(d) Removal and reinstallation of the meter;

(e) A change in fluid temperature that exceeds the transducer's calibrated span;

(f) A change in the flow rate, pressure, temperature, or gravity that exceeds the normal operating conditions as defined in § 3174.152(a);

(g) The mechanical or electrical components of the meter are changed, repaired, or removed;

(h) Internal calibration factors are changed or reprogrammed; and

(i) At the request of the AO.

§ 3174.154 Excessive meter factor deviation.

If the difference in meter factors between any two consecutive provings exceeds ±0.0025 then:

(a) The operator must submit by Sundry Notice for approval to the AO a statement explaining that the meter did not malfunction; or

(b) If the AO does not approve the explanation that the meter did not malfunction or the operator did not provide one, then the meter must be immediately removed from service, checked for damage or wear, adjusted or repaired, and re-proved before returning the meter to service. The proving report submitted under § 3174.158 must clearly describe all repairs and adjustments; and

(c) The arithmetic average of the two consecutive meter factors (the previous meter factor and the excessive meter factor) must be applied to the production measured through the meter between the date of the previous meter proving and the date of the excessive meter factor proving.

§ 3174.155 Verification of the temperature transducer.

As part of each required meter proving and upon replacement, the temperature transducer used in conjunction with a temperature averager for a LACT system and the temperature transducer used in conjunction with an ELM must be verified against a known standard according to the following:

(a) The temperature transducer must be compared with a test thermometer traceable to NIST and with a stated accuracy of ±0.25 °F or better;

(b) The temperature reading displayed on the temperature average display or ELM display must be compared with the reading of the test thermometer using one of the following methods:

(1) The test thermometer must be placed in a test thermometer well located not more than 12 inches from the probe of the temperature transducer; or

(2) Both the test thermometer and probe of the temperature transducer must be placed in an insulated water bath. The water bath temperature must be within 20 °F of the normal flowing temperature of the oil.

(c) The displayed reading of instantaneous temperature from the temperature average display or ELM display must be compared with the reading from the test thermometer. If they differ by more than 0.5 °F, then the difference in temperatures must be noted on the meter proving report, and:

(1) The temperature transducer must be adjusted to match the reading of the test thermometer; or

(2) The temperature transducer must be recalibrated, repaired, or replaced.

§ 3174.156 Verification of the pressure transducer (if applicable).

(a) As part of each required meter proving and upon replacement, the pressure transducer must be compared with a test pressure device (dead weight or pressure gauge) traceable to NIST and having a stated maximum uncertainty of no more than one-half of the accuracy required from the transducer being verified.

(b) The pressure reading displayed on the pressure transducer must be compared with the reading of the test pressure device.

(c) The pressure transducer must be tested at the following three points:

(1) Zero (atmospheric pressure);

(2) 100 percent of the calibrated span of the pressure transducer; and

(3) A point that represents the normal flowing pressure through the Coriolis meter.

(d) If the pressure applied by the test pressure device and the pressure displayed on the pressure transducer vary by more than the required accuracy of the pressure transducer, the pressure transducer must be adjusted to read within the stated accuracy of the test pressure device.

§ 3174.157 Density verification (if applicable).

If the API gravity of oil is determined from the average density measured by the Coriolis meter (rather than from a composite sample), then during each proving of the Coriolis meter, the instantaneous flowing density determined by the Coriolis meter must be verified by comparing it with an independent density measurement as specified under API 5.6, Subsection 9.1.2.1 (incorporated by reference, see § 3174.30). The difference between the indicated density determined from the Coriolis meter and the independently determined density must be within the specified density reference accuracy specification of the Coriolis meter. Sampling must be performed in accordance with API 8.1, API 8.2, or API 8.3 (all incorporated by reference, see § 3174.30), as appropriate.

§ 3174.158 Meter proving reporting requirements.

Meter proving reports may be in any format showing the information required in this section, provided that the calculation of meter factors maintains the proper calculation sequence and rounding. For example: The forms listed in API 12.2.3, Subsection 13 or API 5.6 Appendix C (see § 3174.30 for availability information) may be used.

(a) Each meter proving report must contain the following information recorded at the discrimination levels described in API 12.2.3, Section 11 (incorporated by reference, see § 3174.30):

(1) The information identified and required under the recordkeeping requirements of § 3170.50(g) of this part;

(2) Unique meter identification number;

(3) Meter specification data;

(4) Fluid data;

(5) Liquid properties at metering condition;

(6) Report data, including previous and current flow rates, totalizer, API gravity at 60 °F, and meter factor;

(7) For each proving run the following raw data must be documented:

(i) Run number;

(ii) Temperature of prover and meter;

(iii) Pressure of prover and meter; and

(iv) Pulses and/or intermediate meter factor, as applicable;

(8) Calculation of correction factors for both prover and meter;

(9) Calculation of meter factors;

(10) The temperature from the test thermometer and the temperature from the temperature averager or temperature transducer in accordance with § 3174.155;

(11) For pressure transducers (if applicable), the pressure applied by the pressure test device and the pressure reading from the pressure transducer at the three points required under § 3174.156(c);

(12) For density verification (if applicable), the instantaneous flowing density (as determined by the Coriolis meter), and the independent density measurement, as compared under § 3174.157; and

(13) If a composite meter factor will be used, the ''as left'' fluid flowing pressure after disconnecting the prover.

(b) In addition to the information required under paragraph (a) of this section, the operator must report to the AO all meter-proving and volume adjustments after any LACT system or CMS malfunction, including excessive meter-factor deviation.

(c) The meter-proving report must be made available to the AO upon request.

§ 3174.160 Measurement tickets.

Sections 3174.161 through 3174.162 outline the information required to be included on a uniquely numbered measurement ticket or volume statement, in either paper or electronic format, that must be completed prior to oil-volume reporting on an OGOR. Measurement tickets must be made available to the AO upon request.

§ 3174.161 Tank-gauging measurement ticket.

(a) The following information must be documented during the field tank-gauging operation by the operator, purchaser, or transporter, as appropriate:

(1) The information identified and required under the recordkeeping requirements of § 3170.50(g) of this part;

(2) Unique tank number and nominal tank capacity;

(3) Opening and closing dates and times;

(4) Opening and closing gauges and observed temperatures in °F;

(5) Observed API oil gravity and temperature in °F;

(6) S&W content percent;

(7) Unique number of each seal removed and installed; and

(8) Name of the individual performing the tank gauging.

(b) The following information is required to be calculated and documented on the measurement ticket upon the completion of the measurement ticket by the operator, purchaser, or transporter, as appropriate:

(1) Observed volume for opening and closing gauge, using tank-specific calibration charts (see § 3174.52);

(2) API oil gravity at 60 °F, following API 11.1 (incorporated by reference, see § 3174.30), utilizing the glass thermal expansion equation when using hydrometer or thermohydrometer; and

(3) Total net standard volume removed from the tank following API 11.1 and API 12.1.1, Subsections 10 and 11, (both incorporated by reference, see § 3174.30) or other methods approved by the BLM.

§ 3174.162 LACT system and CMS measurement ticket or volume statement.

At the beginning of every month, the operator, purchaser, or transporter, as appropriate, must document either a measurement ticket under paragraph (a) of this section, or a volume statement under paragraph (b) of this section. A measurement ticket under paragraph (a) of this section must also be closed when proving operations are conducted.

(a) A measurement ticket must include the following:

(1) The information identified and required under the recordkeeping requirements of § 3170.50(g) of this part;

(2) The unique meter identification number;

(3) Opening and closing dates and times;

(4) Opening and closing totalizer readings of the indicated volume;

(5) The meter factor, if meter factor is a composite meter factor, indicate as such;

(6) Total gross standard volume removed through the LACT system or CMS;

(7) API oil gravity. For API oil gravity determined from a composite sample, the observed API oil gravity and temperature must be indicated in °F and the API oil gravity must be indicated at 60 °F. For API oil gravity determined from average density (CMS only), the average uncorrected density must be determined by the CMS;

(8) The average temperature for the measurement period in °F;

(9) The average flowing pressure for the measurement period in psig;

(10) S&W content percent;

(11) Total net standard volume following API 11.1 and API 12.2.2, Subsections 9, 10 and 11 (both incorporated by reference, see § 3174.30) or other methods approved by the BLM.

(12) Unique number of each seal removed and installed; and

(13) Name of the purchaser's representative; or

(b) A volume statement must be generated by an ELM system from unaltered, unprocessed, and unedited daily or hourly (as applicable, see § 3174.120) QTRs or from measurement-data systems that have been approved by the BLM (see § 3174.121). The volume statement must contain the information identified in API 21.2, Subsection 10.3.1 (incorporated by reference, see § 3174.30). Volume statements must include the information identified and required under the recordkeeping requirements of § 3170.50(g) of this part.

(c) Any accumulators used in the determination of average pressure, average temperature, and average density for the measurement period must be reset to zero whenever a new measurement ticket is opened.

§ 3174.170 Oil measurement by other methods.

Any method of oil measurement other than the methods addressed in this rule or listed on the *www.blm.gov* website used at an FMP requires prior BLM approval (see § 3170.30 of this part).

§ 3174.180 Determination of oil volumes by methods other than measurement.

(a) Under 43 CFR 3162.7–2, when production cannot be measured due to spillage or leakage, the amount of production must be determined by using any method the AO approves or prescribes. This category of production may include, but is not limited to, oil that is classified as slop oil or waste oil.

(b) No oil may be classified or disposed of as waste oil unless the operator can demonstrate to the satisfaction of the AO that it is not economically feasible to put the oil into marketable condition.

(c) The operator may not sell or otherwise dispose of slop oil without prior written approval by Sundry Notice from the AO. Following the sale or disposal of slop oil, the operator must notify the AO by Sundry Notice of the volume sold or disposed of and the method used to compute the volume.

§ 3174.190 Immediate assessments.

Certain instances of noncompliance warrant the imposition of immediate assessments upon the BLM's discovery of the violation, as prescribed in the following table. Imposition of any of these assessments does not preclude other appropriate enforcement actions.

TABLE 1 TO § 3174.190: VIOLATIONS SUBJECT TO AN IMMEDIATE ASSESSMENT

Violation:	Assessment amount per violation:
1. Missing or nonfunctioning FMP LACT system components, as required by § 3174.100	$1,000
2. Missing or nonfunctioning FMP CMS components, as required by § 3174.130	1,000
3. Failure to meet the proving frequency requirements for an FMP, detailed in § 3174.153	1,000
4. Failure to obtain a written approval, as required by § 3174.170, before using any oil measurement method other than tank gauging, LACT system, or CMS at a FMP	1,000

■ 5. Revise subpart 3175 to read as follows:

Subpart 3175—Measurement of Gas

Sec.

3175.10 Definitions and acronyms.
3175.20 General requirements.
3175.30 Incorporation by reference.
3175.31 Specific performance requirements.
3175.40 Measurement equipment requiring BLM approval.
3175.41 Approved measurement equipment.
3175.43 Data submission and notification requirements.
3175.50 Grandfathering.
3175.60 Timeframes for compliance.
3175.70 Measurement location.
3175.80 Flange-tapped orifice plate (primary device).
3175.90 Mechanical recorder (secondary device).
3175.91 Installation and operation of mechanical recorders.
3175.92 Verification and calibration of mechanical recorders.
3175.93 Integration statements.
3175.94 Volume determination.
3175.100 Electronic gas measurement (secondary and tertiary device).
3175.101 Installation and operation of electronic gas measurement systems.
3175.102 Verification and calibration of electronic gas measurement systems.
3175.103 Flow rate, volume, and average value calculation.
3175.104 Logs and records.
3175.110 Gas sampling and analysis.
3175.111 General sampling requirements.
3175.112 Sampling probe and tubing.
3175.113 Spot samples—general requirements.
3175.114 Spot samples—allowable methods.
3175.115 Spot samples—frequency.
3175.116 Composite sampling methods.
3175.117 On-line gas chromatographs.
3175.118 Gas chromatograph requirements.
3175.119 Components to analyze.
3175.120 Gas analysis report requirements.
3175.121 Effective date of a spot or composite gas sample.
3175.125 Calculation of heating value and volume.
3175.126 Reporting of heating value and volume.
3175.130 Requirements for gas storage agreement measurement points (GSAMPs).
3175.140 Temporary measurement.
3175.150 Immediate assessments.
Appendix A to Subpart 3175—Table of Atmospheric Pressures
Appendix B to Subpart 3175— Maximum Time Between Required Actions

§ 3175.10 Definitions and acronyms.

(a) As used in this subpart, the term:

AGA Report No. (followed by a number) means a standard prescribed by the American Gas Association, with the number referring to the specific standard.

Area ratio means the smallest unrestricted area at the primary device divided by the cross-sectional area of the meter tube. For example, the area ratio (A_r) of an orifice plate is the area of the orifice bore (A_d) divided by the area of the meter tube (A_D). For an orifice plate with a bore diameter (d) of 1.000 inches in a meter tube with an inside diameter (D) of 2.000 inches the area ratio is 0.25 and is calculated as follows:

$$A_d = \frac{\pi d^2}{4} = \frac{\pi \cdot 1.000^2}{4} = 0.7854 in^2 \qquad A_D = \frac{\pi D^2}{4} = \frac{\pi \cdot 2.000^2}{4} = 3.1416 in^2$$

$$A_r = \frac{A_d}{A_D} = \frac{0.7854 in^2}{3.1416 in^2} = 0.25$$

As-found means the reading of a mechanical or electronic transducer when compared to a certified test device, prior to making any adjustments to the transducer.

As-left means the reading of a mechanical or electronic transducer when compared to a certified test device, after making adjustments to the transducer, but prior to returning the transducer to service.

Atmospheric pressure means the pressure exerted by the weight of the atmosphere at a specific location.

Beta ratio means the reference inside diameter of the orifice bore divided by the reference inside diameter of the meter tube. This is also referred to as a diameter ratio.

Bias means a systematic shift in the mean value of a set of measurements away from the true value of what is being measured.

British thermal unit (Btu) means the amount of heat needed to raise the temperature of one pound of water by 1 °F.

Component-type electronic gas measurement system means an electronic gas measurement system comprising transducers and a flow computer, each identified by a separate make and model, from which performance specifications are obtained.

Discharge coefficient means an empirically derived correction factor that is applied to the theoretical differential flow equation in order to calculate a flow rate that is within stated uncertainty limits.

Effective date of a spot or composite gas sample means the first day on which the relative density and heating value determined from the sample are used in calculating the volume and quality on which royalty is based.

Electronic gas measurement (EGM) means all of the hardware and software necessary to convert the static pressure, differential pressure, and flowing temperature developed as part of a primary device, to a quantity, rate, or quality measurement that is used to determine Federal royalty. For orifice meters, this includes the differential-pressure transducer, static-pressure transducer, flowing-temperature transducer, on-line gas chromatograph (if used), flow computer, display, memory, and any internal or external processes used to edit and present the data or values measured.

Element range means the difference between the minimum and maximum value that the element (differential-pressure bellows, static-pressure element, and temperature element) of a mechanical recorder is designed to measure.

Gas storage agreement measurement point (GSAMP) means a point where the gas injected and withdrawn from a gas-storage agreement is measured and the measurement affects the calculation of the injection and withdrawal fees paid to the Federal Government, but does not affect the calculation of royalty due on native oil or gas produced from the gas storage area. The GSAMP will not be the FMP for the measurement of volumes for royalty determinations on native oil or gas produced from the gas storage area.

GPA (followed by a number) means a standard prescribed by the Gas Processors Association, with the number referring to the specific standard.

Heating value means the gross heat energy released by the complete combustion of one standard cubic foot of gas at 14.73 pounds per square inch absolute (psia) and 60 °F.

Heating value variability means the deviation of previous heating values over a given time period from the average heating value over that same time period, calculated at a 95 percent confidence level. Unless otherwise approved by the BLM, variability is determined with the following equation:

$$V_{95\%} = 100 \times \frac{\sigma_{HV} \times 2.776}{\overline{HV}}$$

where:

$V_{95\%}$ = heating value variability, %

σ_{HV} = standard deviation of the previous five heating values

2.776 = the "student-t" function for a probability of 0.05 and 4 degrees of freedom (degree of freedom is the number of samples minus 1)

$\overline{HV}$ = the average heating value over the time period used to determine the standard deviation.

High-volume Facility Measurement Point (or high-volume FMP) means any FMP that measures more than 200 Mcf/day, but less than or equal to 1,000 Mcf/day over the averaging period.

Hydrocarbon dew point (HCDP) means the temperature at which hydrocarbon liquids begin to form within a gas mixture. For the purpose of this regulation, the hydrocarbon dew point is the flowing temperature of the gas measured at the FMP, unless otherwise approved by the AO.

Integration means a process by which the lines on a circular chart (differential pressure, static pressure, and flowing temperature) used in conjunction with a mechanical chart recorder are re-traced or interpreted in order to determine the volume that is represented by the area under the lines. An integration statement documents the values determined from the integration.

Live input variable means a datum that is automatically obtained in real time by an EGM system.

Low-volume FMP means any FMP that measures more than 35 Mcf/day, but less than or equal to 200 Mcf/day, over the averaging period.

Lower calibrated limit means the minimum engineering value for which a transducer was calibrated by certified equipment, either in the factory or in the field.

Mean means the sum of all the values in a data set divided by the number of values in the data set.

Mole percent means the number of molecules of a particular type that are present in a gas mixture divided by the total number of molecules in the gas mixture, expressed as a percentage.

Nonanes-plus (C_9+) analysis means a gas analysis that individually measures the gas components from methane (C_1) through octanes (C_8). Components with higher molecular weights than octanes (C_8) are grouped together into the nonanes-plus (C_9+) component.

Normal flowing point means the average differential pressure, static pressure, and flowing temperature at an FMP taken over a time period of not less than 1 day and not more than 31 days.

Primary device means the volume-measurement equipment installed in a pipeline that creates a measurable and predictable pressure drop in response to the flow rate of fluid through the pipeline. It includes the pressure-drop device, device holder, pressure taps, required lengths of pipe upstream and downstream of the pressure-drop device, and any flow conditioners that may be used to establish a fully developed symmetrical flow profile.

Published inside diameter means the inside diameter of a pipe published in a standard piping table as a function of nominal pipe size and schedule. For example, the published inside diameter of a 2-inch pipe is 2.067 inches.

Qualified test facility means a facility with currently certified measurement systems for mass, length, time, temperature, and pressure traceable to the NIST primary standards or applicable international standards approved by the BLM.

Quantity transaction record (QTR) means a report generated by an EGM system that summarizes the daily and hourly volumes calculated by the flow computer and the average or totals of the dynamic data that is used in the calculation of volume.

Redundancy verification means a process of verifying the accuracy of an EGM system by comparing the readings of two sets of transducers placed on the same primary device.

Reference inside diameter means the measured inside diameter corrected to a reference temperature (68 °F).

Reynolds number means the ratio of the inertial forces to the viscous forces of the fluid flow, and is defined as:

$$R_e = \frac{V \rho D}{\mu}$$

Where:

R_e = the Reynolds number
V = velocity
ρ = fluid density
D = inside meter tube diameter
μ = fluid viscosity

Secondary device means the differential-pressure, static-pressure, and temperature transducers in an EGM system, or a mechanical recorder, including the differential pressure, static pressure, and temperature elements, and the clock, pens, pen linkages, and circular chart.

Self-contained EGM system means an EGM system in which the transducers and flow computer are identified by a single make and model number from which the performance specifications for the transducers and flow computer are obtained. Any change to the make or model numbers of either a transducer or a flow computer within a self-contained EGM system changes the system to a component-type EGM system.

Senior fitting means a type of orifice plate holder that allows the orifice plate to be removed, inspected, and replaced

without isolating and depressurizing the meter tube.

Standard cubic foot (scf) means a cubic foot of gas at 14.73 psia and 60 °F.

Standard deviation means a measure of the variation in a distribution, and is equal to the square root of the arithmetic mean of the squares of the deviations of each value in the distribution from the arithmetic mean of the distribution.

Tertiary device means, for EGM systems, the flow computer and associated memory, calculation, and display functions.

Threshold of significance means the maximum difference between two data sets (a and b) that can be attributed to uncertainty effects. The threshold of significance is determined as follows:

$$T_s = \sqrt{U_a^2 + U_b^2}$$

Where:

T_s = Threshold of significance, in percent

U_a = Uncertainty (95 percent confidence) of data set a, in percent

U_b = Uncertainty (95 percent confidence) of data set b, in percent

Transducer means an electronic device that converts a physical property such as pressure, temperature, or electrical resistance into an electrical output signal that varies proportionally with the magnitude of the physical property. Typical output signals are in the form of electrical potential (volts), current (milliamps), or digital pressure or temperature readings. The term transducer includes devices commonly referred to as transmitters.

Turndown means a reduction of the measurement range of a transducer in order to improve measurement accuracy at the lower end of its scale. It is typically expressed as the ratio of the upper range limit to the upper calibrated limit.

Type test means a test on a representative number of a specific make, model, and range of a device to determine its performance over a range of operating conditions.

Uncertainty means the range of error that could occur between a measured value and the true value being measured, calculated at a 95 percent confidence level.

Upper calibrated limit means the maximum engineering value for which a transducer was calibrated by certified equipment, either in the factory or in the field. This is also referred to as span.

Upper range limit (URL) means the maximum value that a transducer is designed to measure.

Verification means the process of determining the amount of error in a differential pressure, static pressure, or temperature transducer or element by comparing the readings of the transducer or element with the readings from a certified test device with known accuracy.

Very-high-volume FMP means any FMP that measures more than 1,000 Mcf/day over the averaging period.

Very-low-volume FMP means any FMP that measures 35 Mcf/day or less over the averaging period.

(b) As used in this subpart the following additional acronyms carry the meaning prescribed:

GARVS means the BLM's Gas Analysis Reporting and Verification System.

GC means gas chromatograph.

GPA means the Gas Processors Association.

Mcf means 1,000 standard cubic feet.

psia means pounds per square inch—absolute.

psig means pounds per square inch—gauge.

§ 3175.20 General requirements.

(a) Measurement of all gas at an FMP must comply with the standards prescribed in §§ 3175.10 through 3175.126; § 3175.140, if applicable; and § 3175.150, except as otherwise approved under § 3170.40 of this part.

(b) Measurement of all gas at a GSAMP must comply with the standards prescribed in § 3175.130, except as otherwise approved under § 3170.40 of this part.

§ 3175.30 Incorporation by reference.

(a) Certain material identified is incorporated by reference into this part with the approval of the Director of the Federal Register under 5 U.S.C. 552(a) and 1 CFR part 51. To enforce any edition other than that specified in this section, the BLM must publish a rule in the **Federal Register** and the material must be reasonably available to the public. All approved material is available for inspection at the Bureau of Land Management, Division of Fluid Minerals, 20 M Street SE, Washington, DC 20003, 202–912–7162; and at all BLM offices with jurisdiction over oil and gas activities; and is available from the sources listed as follows. It is also available for inspection at the National Archives and Records Administration (NARA). For information on the availability of this material at NARA, email *fedreg.legal@nara.gov* or go to *www.archives.gov/federal-register/cfr/ibr-locations.html.*

(b) American Gas Association (AGA), 400 North Capitol Street NW, Suite 450, Washington, DC 20001; telephone 202–824–7000.

(1) AGA Report No. 3, Orifice Metering of Natural Gas and Other Related Hydrocarbon Fluids; Second Edition, September, 1985 (''AGA Report No. 3 (1985)''), IBR approved for §§ 3175.50(b) and (c), 3175.80(n), and 3175.94(a).

(2) AGA Transmission Measurement Committee Report No. 8, Compressibility Factors of Natural Gas and Other Related Hydrocarbon Gases; Second Edition, November 1992 (''AGA Report No. 8 (1992)''), IBR approved for § 3175.50(c).

(3) AGA Transmission Measurement Committee Report No. 8, Part 1, Thermodynamic Properties of Natural Gas and Related Gases, Detail and Gross Equations of State; Third Edition, April 2017 (''AGA Report No. 8 Part 1''), IBR approved for §§ 3175.103(a), 3175.120(d).

(4) AGA Transmission Measurement Committee Report No. 8, Part 2, Thermodynamic Properties of Natural Gas and Related Gases, GERG–2008 Equation of State; First Edition, April 2017 (''AGA Report No. 8 Part 2''), IBR approved for §§ 3175.103(a), 3175.120(d).

(c) American Petroleum Institute (API), 1220 L Street NW, Washington, DC 20005; telephone 202–682–8000. API also offers free, read-only access to all of the material at *http://publications.api.org.*

(1) API Manual of Petroleum Measurement Standards (MPMS) Chapter 14—Natural Gas Fluids Measurement, Section 1—Collecting and Handling of Natural Gas Samples for Custody Transfer; Seventh Edition, May 2016; Addendum, August 2017; Errata, August 2017 (''API 14.1''),'' IBR approved for §§ 3175.80(p), 3175.112(c), 3175.113(c), 3175.114(b).

(2) API MPMS, Chapter 14, Section 3, Orifice Metering of Natural Gas and Other Related Hydrocarbon Fluids—Concentric, Square-edged Orifice Meters, Part 1: General Equations and Uncertainty Guidelines; Fourth Edition, September 2012; Errata, July 2013 (''API 14.3.1''), IBR approved for §§ 3175.31(a), 3175.80(a).

(3) API MPMS Chapter 14, Section 3, Orifice Metering of Natural Gas and Other Related Hydrocarbon Fluids—Concentric, Square-edged Orifice Meters, Part 2: Specification and Installation Requirements; Fifth Edition, March 2016; Errata 1, March 2017; Errata 2, January 2019 (''API 14.3.2''), IBR approved for §§ 3175.50(b), 3175.80(b), (e) through (i), (l) through (o), Table 1 to § 3175.80.

(4) API MPMS Chapter 14, Section 3, Orifice Metering of Natural Gas and Other Related Hydrocarbon Fluids—Concentric, Square-edged Orifice Meters, Part 3: Natural Gas

Applications; Fourth Edition, November 2013 (''API 14.3.3 (2013)''),'' IBR approved for §§ 3175.50(c), 3175.94(a), and 3175.103(a).

(5) API MPMS Chapter 14, Natural Gas Fluids Measurement, Section 3, Concentric, Square-Edged Orifice Meters, Part 3, Natural Gas Applications, Third Edition, August, 1992 (''API 14.3.3 (1992)''), IBR approved for § 3175.50(c).

(6) API MPMS, Chapter 14.5, Calculation of Gross Heating Value, Relative Density, Compressibility and Theoretical Hydrocarbon Liquid Content for Natural Gas Mixtures for Custody Transfer; Third Edition, January 2009; Reaffirmed, February 2014 (''API 14.5''), IBR approved for §§ 3175.120(c), and 3175.125(a).

(7) API MPMS Chapter 21.1, Flow Measurement Using Electronic Metering Systems—Electronic Gas Measurement; Second Edition, February 2013 (''API 21.1''), IBR approved for *Table 1 to § 3175.100,* §§ 3175.101(e), 3175.102(a) and (c) through (e), 3175.103(c), and 3175.104(a) through (d).

(d) Gas Processors Association (GPA), 6526 E 60th Street, Tulsa, OK 74145; telephone 918–493–3872.

(1) GPA Midstream Standard 2166–17, Obtaining Natural Gas Samples for Analysis by Gas Chromatography; Reaffirmed 2017 (''GPA 2166–17''), IBR approved for §§ 3175.113(c), 3175.114(a), and 3175.117(a).

(2) GPA Midstream Standard 2261–19, Analysis for Natural Gas and Similar Gaseous Mixtures by Gas Chromatography; Revised 2019 (''GPA 2261–19''),'' IBR approved for § 3175.118(a) and (c).

(3) GPA Midstream Standard 2198–16, Selection, Preparation, Validation, Care and Storage of Natural Gas and Natural Gas Liquids Reference Standard Blends; Revised 2016 (''GPA 2198–16''), IBR approved for § 3175.118(c).

(e) Pipeline Research Council International (PRCI), 3141 Fairview Park Dr., Suite 525, Falls Church, VA 22042; telephone 703–205–1600.

(1) PRCI Contract-NX–19, Manual for the Determination of Supercompressibility Factors for Natural Gas; December 1962 (''PRCI NX 19''), IBR approved for § 3175.50(c).

(2) [Reserved]

Note 1 to paragraphs (b) through (e): You may also be able to purchase these standards from the following resellers: Techstreet, 3916 Ranchero Drive, Ann Arbor, MI 48108; telephone 734–780–8000; *www.techstreet.com/api/apigate.html;* IHS Inc., 321 Inverness Drive South, Englewood, CO 80112; 303–790–0600; *www.ihs.com;* SAI Global, 610 Winters Ave., Paramus, NJ 07652; telephone 201–986–1131; *http://infostore.saiglobal.com/store/.*

§ 3175.31 Specific performance requirements.

(a) *Flow rate measurement uncertainty levels.* (1) For high-volume FMPs, the measuring equipment must achieve an overall flow rate measurement uncertainty within ±3 percent.

(2) For very-high-volume FMPs, the measuring equipment must achieve an overall flow rate measurement uncertainty within ±2 percent.

(3) There is no uncertainty requirement for low- and very-low-volume FMPs.

(4) The determination of uncertainty is based on the values of flowing parameters (*e.g.,* differential pressure, static pressure, and flowing temperature for differential meters or velocity, mass flow rate, or volumetric flow rate for linear meters) determined as follows, listed in order of priority:

(i) The average flowing parameters listed on the most recent daily QTR, if available to the BLM at the time of the uncertainty determination; or

(ii) The average flowing parameters from the previous day, as required under § 3175.101(b)(4)(i) through (iii) (for differential meters).

(5) The uncertainty must be calculated under API 14.3.1, Section 12 (incorporated by reference, see § 3175.30) or other methods approved by the AO.

(b) *Heating value uncertainty levels.* (1) For high-volume FMPs, the measuring equipment must achieve an annual average heating value uncertainty within ±3 percent.

(2) For very-high-volume FMPs, the measuring equipment must achieve an annual average heating value uncertainty within ±2 percent.

(3) There is no heating value uncertainty requirement for low- and very-low-volume FMPs.

(4) Unless otherwise approved by the AO, the average annual heating value uncertainty must be determined as follows:

$$U_{\overline{HV}} = 0.951 \times V_{95\%} \sqrt{\frac{1}{N}}$$

where:

$U_{\overline{HV}}$ = average annual heating value uncertainty

$V_{95\%}$ = heating value variability

N = the number of samples taken per year (N = 1, 2, 4, 6, 12, or 26)

(c) *Bias.* For low-volume, high-volume, and very-high-volume FMPs, the measuring equipment used for either flow rate or heating value determination must achieve measurement without statistically significant bias.

(d) *Verifiability.* An operator may not use measurement equipment for which the accuracy and validity of any input, factor, or equation used by the measuring equipment to determine quantity, rate, or heating value are not independently verifiable by the BLM. Verifiability includes the ability to independently recalculate the volume, rate, and heating value based on source records and field observations.

§ 3175.40 Measurement equipment requiring BLM approval.

Except as allowed under § 3175.50(a), all makes, models, sizes, and software versions of the devices listed in this section that are used at FMPs must be

approved by the BLM and posted in the PMT section at *www.blm.gov.* BLM approval will be based upon a showing that the equipment meets or exceeds the performance requirements of § 3175.31. To obtain approval, the applicant must submit an application to the PMT. Recommended testing procedures will be listed at *www.blm.gov.*

(a) Transducers, when used at high- and very-high volume FMPs;

(b) Flow-computer software, when used at high- and very-high volume FMPs;

(c) Isolating flow conditioners;

(d) Differential pressure meters other than flange-tapped orifice plates;

(e) Coriolis meters;

(f) Ultrasonic meters;

(g) Software used to capture and process the output from a GC;

(h) Water vapor measurement equipment and methods; and

(i) Measurement data systems.

§ 3175.41 Approved measurement equipment.

The measurement equipment described in this section is approved for use at FMPs, provided it meets or exceeds the minimum standards prescribed in this subpart:

(a) Flange-tapped orifice plates, associated fittings, and meter tubes that are constructed, installed, operated, and maintained in accordance with the standards in § 3175.80;

(b) Chart recorders, when used in conjunction with low- and very-low volume FMPs, that are installed, operated, and maintained in accordance with the standards in § 3175.90;

(c) GCs that meet the standards in §§ 3175.117 and 3175.118 for determining heating value and relative density;

(d) Transducers, when used at low- and very-low volume FMPs, must meet the requirements of § 3175.102; and

(e) Flow-computer software, when used at low- and very-low volume FMPs, must meet the requirements of § 3175.101.

§ 3175.43 Data submission and notification requirements.

(a) The operator must submit the following to the AO upon request:

(1) Documentation of orifice-plate inspection for FMPs measuring gas from newly drilled or hydraulically fractured wells (see § 3175.80(e));

(2) Documentation of routine orifice-plate inspection (see § 3175.80(e));

(3) Documentation of basic meter-tube inspection (see § 3175.80(j)(6));

(4) Documentation of detailed meter-tube inspection (see § 3175.80(l));

(5) Documentation of mechanical recorder verification after repair or installation (see § 3175.92(d));

(6) Documentation of routine mechanical recorder verification (see § 3175.92(d));

(7) Documentation of EGM system verification after repair or installation (see § 3175.102(e));

(8) Documentation of routine EGM system verification (see § 3175.102(e));

(9) EGM audit trail data including QTR, configuration log, event log, and alarm log (see § 3175.104);

(10) MDS audit trail data including QTR, configuration log, event log, and alarm log (see § 3175.104(e));

(11) GC verification report (see § 3175.118(d)); and

(12) Gas analysis report (see § 3175.120).

(b) Notification requirements to the AO: The operator must notify the AO at the specified time period listed in this paragraph before conducting the following procedures:

(1) Twenty-four (24) hours prior to performing a detailed meter-tube inspection (see § 3175.80(k)(3));

(2) Seventy-two (72) hours prior to performing a basic meter-tube inspection (see § 3175.80(j)(4)); and

(3) Seventy-two (72) hours prior to taking a gas sample (see § 3175.113(b)).

§ 3175.50 Grandfathering.

(a) *Exemption.* Equipment listed in § 3175.40(a) through (f) that was installed at a very-low, low-, or high-volume FMP prior to [EFFECTIVE DATE OF FINAL RULE] is exempt from the approval requirement in § 3175.40. Any of the equipment listed in § 3175.40(a) through (i) that was installed after [EFFECTIVE DATE OF FINAL RULE] must meet the approval requirement in § 3175.40.

(b) *Meter tubes.* (1) Meter tubes installed at low- and high-volume FMPs before January 17, 2017, are exempt from the meter tube requirements of API 14.3.2, Subsection 6.2 (incorporated by reference, see § 3175.30) and § 3175.80(h) and (m). For high-volume FMPs, the BLM will add an uncertainty of ±0.25 percent to the discharge coefficient uncertainty when determining overall meter uncertainty under § 3175.31(a), unless the operator provides data to the PMT that shows a lower uncertainty is justified, and the BLM approves a lower uncertainty. If a meter tube is replaced, it must meet the requirements of API 14.3.2, Subsection 6.2 (incorporated by reference, see § 3175.30), and § 3175.80(h) and (m). Meter tubes grandfathered under this section must still meet the following requirements:

(i) Orifice plate eccentricity must comply with AGA Report No. 3 (1985), Section 4.2.4 (incorporated by reference, see § 3175.30);

(ii) Meter tube construction and condition must comply with AGA Report No. 3 (1985), Section 4.3.4 (incorporated by reference, see § 3175.30); and

(iii) Meter tube lengths.

(A) Meter tube lengths must comply with AGA Report No. 3 (1985), Section 4.4 (dimensions ''A'' and ''A'' from Figures 4–8) (incorporated by reference, see § 3175.30).

(B) If the upstream meter tube contains a 19-tube bundle flow straightener or isolating flow conditioner, the installation must comply with § 3175.80(i);

(2) For meter tubes installed at very-low-, low-, and high-volume FMPs before January 17, 2017, operators may use the measured inside diameter of the meter tube as required by AGA Report No. 3 (1985), Section 4.3.3 (incorporated by reference, see § 3175.30), in lieu of the reference inside diameter of the meter tube for the requirements of §§ 3175.91(d)(7), 3175.92(d)(2), 3175.93(d), 3175.101(c)(5), and 3175.102(e)(1)(iii), and flow-rate calculations. If a meter tube is replaced, operators must use the reference inside diameter of the meter tube to meet the requirements of §§ 3175.91(d)(7), 3175.92(d)(2), 3175.93(d), 3175.101(c)(5), and 3175.102(e)(1)(iii), and for flow-rate calculations.

(c) *EGM software.* (1) EGM software installed at very-low-volume FMPs before January 17, 2017, is exempt from the requirements in § 3175.103(a)(1). However, flow-rate calculations must still be calculated in accordance with AGA Report No. 3 (1985), Section 6, or API 14.3.3 (1992) (both incorporated by reference, see § 3175.30), and supercompressibility calculations must still be calculated in accordance with PRCI NX 19 or AGA Report No. 8 (1992) (both incorporated by reference, see § 3175.30).

(2) EGM software installed at low-volume FMPs before January 17, 2017, is exempt from:

(i) The requirements at § 3175.103(a)(1)(i), if the differential-pressure to static-pressure ratio, based on the monthly average differential pressure and static pressure, is less than the value of ''x1'' shown in API 14.3.3 (2013), Annex G, Table G.1 (incorporated by reference, see § 3175.30). However, flow-rate calculations must still be calculated in accordance with API 14.3.3 (1992) (incorporated by reference, see § 3175.30); and

(ii) The requirements at § 3175.103(a)(1)(ii). However, compressibility must still be calculated in accordance with AGA Report No. 8 (1992) (incorporated by reference, see § 3175.30).

§ 3175.60 Timeframes for compliance.

Except as provided in paragraphs (a) through (d) of this section, the measuring procedures and equipment installed at any FMP or GSAMP, per § 3175.130, must comply with all of the requirements of this subpart as of [EFFECTIVE DATE OF FINAL RULE].

(a) Measuring equipment and procedures installed at very-low-volume FMPs before January 17, 2017, must comply with all of the requirements of this subpart as of [EFFECTIVE DATE OF FINAL RULE].

(b) The gas analysis reporting requirements of § 3175.120(e) and (f) of this subpart will begin 90 days after the BLM notifies operators that GARVS is available for use.

(c) Equipment approvals required in § 3175.40 will be required after [DATE TWO YEARS AFTER EFFECTIVE DATE OF FINAL RULE].

(d) EGM systems must display the flow computer software version as required by § 3175.101(b)(4) after [DATE TWO YEARS AFTER EFFECTIVE DATE OF FINAL RULE].

§ 3175.70 Measurement location.

(a) *Commingling and allocation.* Gas produced from a lease, unit PA, or CA may not be commingled with production from other leases, unit PAs, CAs, or non-Federal properties before the point of royalty measurement, unless prior approval is obtained under 43 CFR subpart 3173.

(b) *Off-lease measurement.* Gas must be measured on the lease, unit, or CA unless approval for off-lease measurement is obtained under 43 CFR subpart 3173.

§ 3175.80 Flange-tapped orifice plate (primary device).

Except as provided in § 3175.50, all flange-tapped orifice plates must comply with the following standards and requirements. (Note: Table 1 to this section lists the standards in this subpart and the API standards that the operator must follow to install and maintain flange-tapped orifice plates. A requirement applies when a column is marked with an ''x'' or a number.).

(a) Fluid conditions must comply with API 14.3.1, Subsection 4.1 (incorporated by reference, see § 3175.30).

(b) Orifice plate eccentricity must comply with API 14.3.2, Subsection 6.2.1 (incorporated by reference, see § 3175.30), and the perpendicularity of the orifice plate holder must maintain the plane of the orifice plate at an angle of 90 degrees to the meter tube axis.

(c) The Beta ratio must be no less than 0.10 and no greater than 0.75.

(d) The orifice bore diameter must be no less than 0.45 inches.

(e) For FMPs measuring production from wells first coming into production, or from existing wells that have been re-fractured (including FMPs already measuring production from one or more other wells), the operator must inspect the orifice plate upon installation and then every 2 weeks thereafter. If the orifice plate does not comply with API 14.3.2, Section 4 (incorporated by reference, see § 3175.30), the operator must replace the orifice plate. When the orifice plate complies with API 14.3.2, Section 4, the operator thereafter must inspect the orifice plate as prescribed in paragraph (f) of this section.

(f)(1) The operator must pull and inspect the orifice plate at the frequency (in months) identified in Table 1 to § 3175.80 of this section.

(2) The time between any two orifice-plate inspections must not exceed the time frames shown in appendix B of this subpart.

(3) The operator must replace orifice plates that do not comply with API 14.3.2, Section 4 (incorporated by reference, see § 3175.30), with an orifice plate that does comply with these standards.

(g) The operator must retain documentation for every plate inspection and must include that documentation as part of the verification report (see § 3175.92(d) for mechanical recorders, or § 3175.102(e) for EGM systems). The operator must provide that documentation to the BLM upon request. The documentation must include:

(1) The information required in § 3170.50(g) of this part;

(2) Plate orientation (bevel upstream or downstream);

(3) Measured orifice bore diameter;

(4) Plate condition (documenting compliance with API 14.3.2, Section 4 (incorporated by reference, see § 3175.30));

(5) The presence of oil, grease, paraffin, scale, or other contaminants on the plate;

(6) Time and date of inspection; and

(7) Whether or not the plate was replaced.

(h) Meter tubes must meet the requirements of API 14.3.2, Subsections 5.1 through 5.4 (incorporated by reference, see § 3175.30).

(i) If flow conditioners are used, they must be either isolating-flow conditioners approved by the BLM and installed under BLM requirements (see § 3175.41) or 19-tube-bundle flow straighteners constructed in compliance with API 14.3.2, Subsections 5.5.2 through 5.5.4, and located in compliance with API 14.3.2, Subsection 6.3 (incorporated by reference, see § 3175.30).

(j) After initial installation of a meter tube at an FMP on or after [EFFECTIVE DATE OF FINAL RULE], the operator must perform an initial basic meter-tube inspection (see paragraph (k)(2) through (7) of this section) within the following timeframes:

(1) For a very-high-volume FMP, within 1 year of the installation date; and

(2) For a high-volume FMP, within 2 years of the installation date.

(k) *Routine basic meter-tube inspection.* (1) Conduct a basic inspection of meter tubes within the timeframe (in years) specified in Table 1 to this section;

(2) Conduct a basic meter-tube inspection that is able to identify obstructions, pitting, and buildup of foreign substances (*e.g.,* grease and scale);

(3) If the basic meter-tube inspection identifies obstructions, pitting, or buildup of foreign substances, the operator must take one of the following actions, as applicable, within 30 days:

(i) For low, high, and very-high volume FMPs, if the basic meter-tube inspection only indicates the presence of an obstruction (such as debris in front of the flow conditioner), the operator must remove the obstruction;

(ii) For low-volume FMPs, if the basic inspection indicates the buildup of foreign substances, the operator must clean the meter tube of the buildup (no action is required if the basic meter-tube inspection only identifies pitting);

(iii) For high and very-high volume FMPs, if the basic inspection indicates pitting or the buildup of foreign substances, the operator must repair or clean the tube and then perform a detailed meter-tube inspection under paragraph (l) of this section; or

(iv) Submit a request to the AO for an extension of the 30-day timeframe, justifying the need for the extension.

(4) Notify the AO at least 72 hours in advance of performing a basic inspection or submit a monthly or quarterly schedule of basic inspections to the AO in advance;

(5) Conduct additional inspections, as the AO may require, if warranted by conditions such as corrosive or erosive-flow (*e.g.,* high hydrogen sulfide (H_2S) or carbon dioxide (CO_2) content) or

signs of physical damage to the meter tube;

(6) Maintain documentation of the findings from the basic meter-tube inspection including:

(i) The information required in § 3170.50(g) of this part;

(ii) The time and date of inspection;

(iii) The type of equipment used to make the inspection; and

(iv) A description of findings, including location and severity of pitting, obstructions, and buildup of foreign substances; and

(7) Complete the first inspection after [EFFECTIVE DATE OF FINAL RULE] within the timeframes (in years) given in Table 1 to this section. The timeframes start:

(i) For meter tubes at high- or very-high-volume FMPs installed on or after [EFFECTIVE DATE OF FINAL RULE], when the initial basic meter-tube inspection was performed;

(ii) For meter tubes at low-volume FMPs installed on or after [EFFECTIVE DATE OF FINAL RULE], when flow first goes through the meter;

(iii) For meter tubes at FMPs installed before [EFFECTIVE DATE OF FINAL RULE], when the previous basic or detailed meter-tube inspection was performed, or [EFFECTIVE DATE OF FINAL RULE], whichever is earlier.

(l)(1) If a detailed inspection is required under paragraph (k)(3)(iii) of this section, the operator must physically measure and inspect the meter tube to determine if the meter tube complies with API 14.3.2, Subsections 5.1 through 5.4 and Subsection 6.2 (incorporated by reference, see § 3175.30), or the requirements under § 3175.50(b), if the meter tube is grandfathered under § 3175.50(b). If the meter tube does not comply with the applicable standards, the operator must repair the meter tube to bring the meter tube into compliance with these standards or replace the meter tube with one that meets these standards.

(2) For all high- and very-high volume FMPs installed after [EFFECTIVE DATE OF FINAL RULE], the operator must perform a detailed inspection under paragraph (l) of this section before operation of the meter. The operator may submit documentation showing that the meter tube complies with API 14.3.2, Subsections 5.1 through 5.4 and Subsection 6.2 (incorporated by reference, see § 3175.30) in lieu of performing a detailed inspection.

(3) The operator must notify the AO at least 24 hours before performing a detailed inspection.

(m) The operator must retain documentation of all detailed meter-tube inspections, demonstrating that the meter tube complies with API 14.3.2, Subsections 5.1 through 5.4 (incorporated by reference, see § 3175.30), and showing all required measurements. The operator must provide such documentation to the BLM upon request for every meter-tube inspection. Documentation must also include the information required in § 3170.50(g) of this part.

(n)(1) Meter-tube lengths and the location of 19-tube-bundle flow straighteners, if applicable, must comply with API 14.3.2, Subsection 6.3 (incorporated by reference, see § 3175.30).

(2) For Beta ratios of less than 0.5, the location of 19-tube bundle flow straighteners installed in compliance with AGA Report No. 3 (1985), Section 4.4 (incorporated by reference, see § 3175.30), also complies with the location of 19-tube bundle flow straighteners as required in paragraph (1) of this section.

(3) If the diameter ratio (β) falls between the values in Tables 7, 8a, or 8b of API 14.3.2, Subsection 6.3 (incorporated by reference, see § 3175.30), the length identified for the larger diameter ratio in the appropriate Table is the minimum requirement for meter-tube length and determines the location of the end of the 19-tube-bundle flow straightener closest to the orifice plate. For example, if the calculated diameter ratio is 0.41, use the table entry for a 0.50 diameter ratio.

(o)(1) Thermometer wells used for determining the flowing temperature of the gas as well as thermometer wells used for verification (test well) must be located in compliance with API 14.3.2, Subsection 6.5 (incorporated by reference, see § 3175.30).

(2) Thermometer wells must be located in such a way that they can sense the same flowing gas temperature that exists at the orifice plate. The operator may accomplish this by physically locating the thermometer well(s) in the same ambient temperature conditions as the primary device (such as in a heated meter house) or by installing insulation and/or heat tracing along the entire meter run. If the operator chooses to use insulation to comply with this requirement, the AO may prescribe the quality of the insulation based on site-specific factors such as ambient temperature, flowing temperature of the gas, composition of the gas, and location of the thermometer well in relation to the orifice plate (*i.e.,* inside or outside of a meter house).

(3) Where multiple thermometer wells have been installed in a meter tube, the flowing temperature must be measured from the thermometer well closest to the primary device.

(4) Thermometer wells used to measure or verify flowing temperature must contain a thermally conductive liquid.

(p) The sample probe must be the first obstruction, and at least five published inside pipe diameters, downstream of the primary device.

(1) For horizontal meter tubes, the sample probe must also be located in the meter tube vertically at the top of a straight run of pipe in accordance with API 14.1, Subsection 6.4.2 (incorporated by reference, see § 3175.30).

(2) For vertical meter tubes, the sample probe must be mounted perpendicular to the vertical meter tube.

TABLE 1 TO § 3175.80: STANDARDS FOR FLANGE-TAPPED ORIFICE PLATES

Subject	Reference (API standards incorporated by reference, see § 3175.30)	VL	L	H	VH
Fluid conditions	§ 3175.80(a)	n/a	x	x	x
Orifice plate construction and condition	API 14.3.2, Section 4	x	x	x	x
Orifice plate eccentricity and perpendicularity**	§ 3175.80(b)	n/a	x	x	x
Beta ratio range	§ 3175.80(c)	n/a	x	x	x
Minimum orifice size	§ 3175.80(d)	n/a	n/a	x	x
New FMP orifice-plate inspection*	§ 3175.80(e)	n/a	x	x	x
Routine orifice-plate inspection frequency, in months*	§ 3175.80(f)	12	6	3	1
Documentation of orifice-plate inspection	§ 3175.80(g)	x	x	x	x
Meter-tube construction and condition**	§ 3175.80(h)	n/a	x	x	x
Flow conditioners including 19-tube bundles	§ 3175.80(i)	n/a	x	x	x
Initial basic meter-tube inspection	§ 3175.80(j)	n/a	n/a	x	x

TABLE 1 TO § 3175.80: STANDARDS FOR FLANGE-TAPPED ORIFICE PLATES—Continued

Subject	Reference (API standards incorporated by reference, see § 3175.30)	VL	L	H	VH
Routine basic meter-tube inspection frequency, in years *	§ 3175.80(k)	n/a	10	5	5
Detailed meter-tube inspection *	§ 3175.80(l)	n/a	n/a	x	x
Documentation of detailed meter-tube inspection	§ 3175.80(m)	n/a	n/a	x	x
Meter-tube length **	§ 3175.80(n)	n/a	x	x	x
Thermometer wells	§ 3175.80(o)	n/a	x	x	x
Sample probe location	§ 3175.80(p)	x	x	x	x

VL=Very-low-volume FMP; L=Low-volume FMP; H=High-volume FMP; VH=Very-high-volume FMP.
* = Immediate assessment for non-compliance under § 3175.150.
** = Applies to all very-high-volume FMPs and meter tubes installed at low- and high-volume FMPs after [EFFECTIVE DATE OF FINAL RULE]. See § 3175.50 for requirements pertaining to meter tubes installed at low- and high-volume FMPs before [EFFECTIVE DATE OF FINAL RULE].

§ 3175.90 Mechanical recorder (secondary device).

(a) The operator may use a mechanical recorder as a secondary device only on very-low-volume and low-volume FMPs.

(b) Table 1 to this section lists the standards that the operator must follow to install, operate, and maintain mechanical recorders. A requirement applies when a column is marked with an ''x'' or a number.

TABLE 1 TO § 3175.90: STANDARDS FOR MECHANICAL RECORDERS

Subject	Reference	VL	L
Applications for use	§ 3175.90(a)	x	x
Manifolds and gauge/impulse lines	§ 3175.91(a)	n/a	x
Differential-pressure pen position	§ 3175.91(b)	n/a	x
Flowing temperature recording	§ 3175.91(c)	n/a	x
On-site data requirements	§ 3175.91(d)	x	x
Operating within the element ranges	§ 3175.91(e)	x	x
Verification after installation or following repair *	§ 3175.92(a)	x	x
Routine verification and verification frequency, in months *	§ 3175.92(b)	6	3
Routine verification procedures	§ 3175.92(c)	x	x
Documentation of verification	§ 3175.92(d)	x	x
Notification of verification	§ 3175.92(e)	x	x
Volume correction	§ 3175.92(f)	n/a	x
Test equipment recertification	§ 3175.92(g)	x	x
Integration statement requirements	§ 3175.93	x	x
Volume determination	§ 3175.94(a)	x	x
Atmospheric pressure	§ 3175.94(b)	x	x

VL=Very-low-volume FMP; L=Low-volume FMP.
* = Immediate assessment for non-compliance under § 3175.150.

§ 3175.91 Installation and operation of mechanical recorders.

(a) The connection between the pressure taps and the mechanical recorder must meet the following requirements:

(1) Gauge lines must:

(i) Have a nominal diameter of not less than ⅜-inch;

(ii) Be sloped upwards from the pressure taps at a minimum pitch of 1 inch per foot of length with no visible sag;

(iii) Have the same internal diameter along their entire length; and

(iv) Be no longer than 6 feet.

(2) Valves, including the valves in manifolds, must have a full-opening internal diameter of not less than ⅜-inch;

(3) There must not be any tees except for the static-pressure line; and

(4) There must be no connections to any other devices or more than one differential-pressure bellows and static-pressure element.

(b) The differential-pressure pen must record at a minimum reading of 10 percent of the differential-pressure-bellows range for the majority of the flowing period. This requirement does not apply to inverted charts.

(c) The flowing temperature of the gas must be continuously recorded and used in the volume calculations under § 3175.94(a)(1).

(d) The following information must be maintained at the FMP in a legible condition, in compliance with § 3170.50(g) of this part, and accessible to the AO at all times:

(1) Differential-pressure-bellows range;

(2) Static-pressure-element range;

(3) Temperature-element range;

(4) Relative density (specific gravity) of the gas;

(5) Static-pressure units of measure (psia or psig);

(6) Elevation of or atmospheric pressure at the FMP;

(7) Reference inside diameter of the meter tube;

(8) Primary device type;

(9) Orifice-bore or other primary-device dimensions necessary for device verification, Beta- or area-ratio determination, and gas-volume calculation;

(10) Make, model, and location of approved isolating flow conditioners, if used;

(11) Location of the downstream end of 19-tube-bundle flow straighteners, if used;

(12) Date of last primary-device inspection; and

(13) Date of last meter verification.

(e) The differential pressure, static pressure, and flowing temperature elements must be operated between the

lower- and upper-calibrated limits of the respective elements.

§ 3175.92 Verification and calibration of mechanical recorders.

(a) *Verification after installation or following repair.* (1) Before performing any verification of a mechanical recorder required in this part, the operator must perform a leak test. The verification must not proceed if leaks are present. The leak test must be conducted in a manner that will detect leaks in the following:

(i) All connections and fittings of the secondary device, including meter manifolds and verification equipment;

(ii) The isolation valves; and

(iii) The equalizer valves.

(2) The operator must adjust the time lag between the differential- and static-pressure pens, if necessary, to be 1/96 of the chart rotation period, measured at the chart hub. For example, the time lag is 15 minutes on a 24-hour test chart and 2 hours on an 8-day test chart.

(3) The meter's differential pen arc must be able to duplicate the test chart's time arc over the full range of the test chart, and must be adjusted, if necessary.

(4) The as-left values must be verified in the following sequence against a certified pressure device for the differential-pressure and static-pressure elements (if the static-pressure pen has been offset for atmospheric pressure, the static-pressure element range is in psia):

(i) Zero (vented to atmosphere);

(ii) 50 percent of element range;

(iii) 100 percent of element range;

(iv) 80 percent of element range;

(v) 20 percent of element range; and

(vi) Zero (vented to atmosphere).

(5) The following as-left temperatures must be verified by placing the temperature probe in a water bath with a certified test thermometer:

(i) Approximately 10 °F below the lowest expected flowing temperature;

(ii) Approximately 10 °F above the highest expected flowing temperature; and

(iii) At the expected average flowing temperature.

(6) If any of the readings required in paragraph (a)(4) or (5) of this section vary from the test device reading by more than the tolerances shown in Table 1 to paragraph (a)(6), the operator must replace and verify the element for which readings were outside the applicable tolerances before returning the meter to service.

TABLE 1 TO PARAGRAPH (a)(6): MECHANICAL RECORDER TOLERANCES

Element	Allowable error
Differential Pressure	±0.5%
Static Pressure	±1.0%
Temperature	±2 °F

(7) If the static-pressure pen is offset for atmospheric pressure:

(i) The atmospheric pressure must be calculated under Appendix A to this subpart; and

(ii) The pen must be offset prior to obtaining the as-left verification values required in paragraph (a)(4) of this section.

(b) *Routine verification frequency.* (1) The differential pressure bellows, static pressure element, and temperature element must be verified in accordance with the requirements of paragraph (c) of this section at the frequency specified (in months) in Table 1 to § 3175.90; and

(2) The time between any two verifications must not exceed the time frames shown in Appendix B of this subpart; or

(3) If an FMP is in non-flowing status at the time that a routine verification is due, a routine verification must be conducted within 15 days after flow is re-initiated. For the purpose of this section, non-flowing status means no flow goes through the FMP for at least 3 months due to seasonal outages or long-term maintenance or repair issues. Non-flowing status does not apply to meters at FMPs that flow intermittently on a daily or weekly basis.

(c) *Routine verification procedures.* (1) Before performing any verification required in this part, the operator must perform a leak test in the manner required under paragraph (a)(1) of this section.

(2) No adjustments to the pens or linkages may be made until an as-found verification is obtained. If the static pen has been offset for atmospheric pressure, the static pen must not be reset to zero until the as-found verification is obtained.

(3) The operator must obtain the as-found values of differential and static pressure against a certified pressure device at the readings listed in paragraph (a)(4) of this section, with the following additional requirements:

(i) If there is sufficient data on site to determine the point at which the differential and static pens normally operate, the operator must also obtain an as-found value at those points;

(ii) If there is not sufficient data on site to determine the points at which the differential and static pens normally operate, the operator must also obtain as-found values at 5 percent of the element range and 10 percent of the element range; and

(iii) If the static-pressure pen has been offset for atmospheric pressure, the static-pressure element range is in units of psia.

(4) The as-found value for temperature must be taken using a certified test thermometer placed in a test thermometer well if there is flow through the meter and the meter tube is equipped with a test thermometer well. If there is no flow through the meter or if the meter is not equipped with a test thermometer well, the temperature probe must be verified by placing it along with a test thermometer in an insulated water bath.

(5) The element undergoing verification must be calibrated according to manufacturer specifications if any of the as-found values determined under paragraph (c)(3) or (4) of this section are not within the tolerances shown in Table 1 to paragraph (a)(6) of this section, when compared to the values applied by the test equipment.

(6) The operator must adjust the time lag between the differential- and static-pressure pens, if necessary, to be 1/96 of the chart rotation period, measured at the chart hub. For example, the time lag is 15 minutes on a 24-hour test chart and 2 hours on an 8-day test chart.

(7) The meter's differential pen arc must be able to duplicate the test chart's time arc over the full range of the test chart, and must be adjusted, if necessary.

(8) If any adjustment to the meter was made, the operator must perform an as-left verification on each element adjusted using the procedures in paragraphs (c)(3) and (4) of this section.

(9) If, after an as-left verification, any of the readings required in paragraph (c)(3) or (4) of this section vary by more than the tolerances shown in Table 1 to paragraph (a)(6) of this section when compared with the test-device reading, any element which has readings that are outside of the applicable tolerances must be replaced and verified under this section before the operator returns the meter to service.

(10) If the static-pressure pen is offset for atmospheric pressure:

(i) The atmospheric pressure must be calculated under appendix A to this subpart; and

(ii) The pen must be offset prior to obtaining the as-left verification values required in paragraph (c)(3) of this section.

(d) *Documentation of verification.* The operator must retain documentation of each verification, as required under

§ 3170.50(g) of this part, and submit it to the BLM upon request. This documentation must include:

(1) The time and date of the verification and the prior verification date;

(2) Primary-device data (reference inside diameter of the meter tube and differential-device size and Beta or area ratio) if the orifice plate is pulled and inspected;

(3) The type and location of taps (flange or pipe, upstream or downstream static tap);

(4) Atmospheric pressure used to offset the static-pressure pen, if applicable;

(5) Mechanical recorder data (make, model, and differential pressure, static pressure, and temperature element ranges);

(6) The normal operating points for differential pressure, static pressure, and flowing temperature;

(7) Verification points (as-found and applied) for each element;

(8) Verification points (as-left and applied) for each element, if a calibration was performed;

(9) Names, contact information, and affiliations of the person performing the verification and any witness, if applicable; and

(10) Remarks, if any.

(e) *Notification of verification.* (1) For verifications performed after installation or following repair, the operator must notify the AO at least 1 business day before conducting the verifications;

(2) For routine verifications, the operator must notify the AO at least 72 hours before conducting the verification or submit a monthly or quarterly verification schedule to the AO in advance that identifies the FMPs that will be verified during that month or quarter.

(f) *Volume correction.* If, during the verification, the combined errors in as-found differential pressure, static pressure, and flowing temperature taken at the normal operating points tested result in a flow-rate error greater than 2 percent and 2 Mcf/day, the volumes reported on the OGOR and on royalty reports submitted to ONRR must be corrected beginning with the date that the inaccuracy occurred. If that date is unknown, the volumes must be corrected beginning with the production month that includes the date that is halfway between the date of the last verification and the date of the current verification. For example: Meter verification determined that the meter was reading 4 Mcf/day high at the normal operating points. The average flow rate measured by the meter is 90 Mcf/day, yielding an error of 4.4 percent. There is no indication of when the inaccuracy occurred. The date of the current verification was Dec 15, 2015. The previous verification was conducted on June 15, 2015. The royalty volumes reported on OGOR B that were based on this meter must be corrected for the 4 Mcf/day error back to September 15, 2015.

(g) *Test equipment recertification.* Test equipment used to verify or calibrate elements at an FMP must be certified at least every 2 years. Documentation of the recertification must be on-site during all verifications and must show:

(1) Test equipment serial number, make, and model;

(2) The date on which the recertification took place;

(3) The test equipment measurement range; and

(4) The uncertainty determined or verified as part of the recertification.

§ 3175.93 Integration statements.

An unedited integration statement must be retained and made available to the BLM upon request. The integration statement must contain the following information:

(a) The information required in § 3170.50(g) of this part;

(b) The name of the company performing the integration;

(c) The month and year for which the integration statement applies;

(d) Reference inside diameter of the meter tube (inches);

(e) The following primary device information, as applicable:

(1) Orifice bore diameter (inches); or

(2) Beta or area ratio, discharge coefficient, and other information necessary to calculate the flow rate;

(f) Relative density (specific gravity);

(g) CO_2 content (mole percent);

(h) Dinitrogen (N_2) content (mole percent);

(i) Heating value calculated under § 3175.125 (Btu/standard cubic feet);

(j) Atmospheric pressure or elevation at the FMP;

(k) Pressure base;

(l) Temperature base;

(m) Static-pressure tap location (upstream or downstream);

(n) Chart rotation (hours or days);

(o) Differential-pressure bellows range (inches of water);

(p) Static-pressure element range (psi); and

(q) For each chart or day integrated:

(1) The time and date on and time and date off;

(2) Average differential pressure (inches of water);

(3) Average static pressure;

(4) Static-pressure units of measure (psia or psig);

(5) Average temperature (°F);

(6) Integrator counts or extension;

(7) Hours of flow; and

(8) Volume (Mcf).

§ 3175.94 Volume determination.

(a) The volume for each chart integrated must be determined as follows:

$$V = IMV \times IV$$

where:

V = reported volume, Mcf

IMV = integral multiplier value, as calculated under this section

IV = the integral value determined by the integration process (also known as the ''extension,'' ''integrated extension,'' and ''integrator count'')

(1) If the primary device is a flange-tapped orifice plate, a single IMV must be calculated for each chart or chart interval using the following equation:

$$IMV = 7709.61 \frac{C_d Y d^2}{\sqrt{1-\beta^4}} \sqrt{\frac{Z_b}{G_r Z_f T_f}}$$

where:

C_d = discharge coefficient or flow coefficient, calculated under API 14.3.3 (2013) or AGA Report No. 3 (1985), Section 5 (both incorporated by reference, see § 3175.30)

β = Beta ratio.

Y = gas expansion factor, calculated under API 14.3.3 (2013), Subsection 5.6 or AGA Report No. 3 (1985), Section 5

d = orifice diameter, in inches

Z_b = supercompressibility at base pressure and temperature

G_r = relative density (specific gravity)

Z_f = supercompressibility at flowing pressure and temperature

T_f = average flowing temperature, in degrees Rankine

(2) For other types of primary devices, the IMV must be calculated using the equations and procedures recommended by the PMT and approved by the BLM, specific to the make, model, size, and area ratio of the primary device being used.

(3) Variables that are functions of differential pressure, static pressure, or flowing temperature (*e.g.,* C_d, Y, Z_f) must use the average values of differential pressure, static pressure, and flowing temperature as determined from the integration statement and reported on the integration statement for the chart or chart interval integrated. The flowing temperature must be the average flowing temperature reported on the integration statement for the chart or chart interval being integrated.

(b) Atmospheric pressure used to convert static pressure in psig to static pressure in psia must be determined under appendix A to this subpart.

§ 3175.100 Electronic gas measurement (secondary and tertiary device).

Except as provided in § 3175.50, the standards and requirements in this section apply to all EGM systems used at FMPs. (Note: Table 1 to this section lists the standards in this subpart and the API standards that the operator must follow to install and maintain EGM systems. A requirement applies when a column is marked with an ''x'' or a number.)

TABLE 1 TO § 3175.100—STANDARDS FOR ELECTRONIC GAS MEASUREMENT SYSTEMS

Subject	Reference (API standards incorporated by reference, see § 3175.30)	VL	L	H	VH
EGM system commissioning	API 21.1, Subsection 7.3	n/a	x	x	x
Access and data security	API 21.1, Section 9	x	x	x	x
No-flow cutoff	API 21.1, Subsection 4.4.5	x	x	x	x
Manifolds and gauge lines	§ 3175.101(a)	n/a	x	x	x
Display requirements	§ 3175.101(b)	x	x	x	x
On-site information	§ 3175.101(c)	x	x	x	x
Operating within the calibrated limits	§ 3175.101(d)	n/a	x	x	x
Flowing-temperature measurement	§ 3175.101(e)	n/a	x	x	x
Verification after installation or following repair *	§ 3175.102(a)	x	x	x	x
Routine verification frequency, in months *	§ 3175.102(b)	12	6	6	6
Routine verification procedures	§ 3175.102(c)	x	x	x	x
Redundancy verification	§ 3175.102(d)	x	x	x	x
Documentation of verification	§ 3175.102(e)	x	x	x	x
Notification of verification	§ 3175.102(f)	x	x	x	x
Volume correction	§ 3175.102(g)	n/a	x	x	x
Test-equipment requirements	§ 3175.102(h)	x	x	x	x
Flow-rate calculation **	§ 3175.103(a)	x	x	x	x
Atmospheric pressure	§ 3175.103(b)	x	x	x	x
Volume calculation	§ 3175.103(c)	x	x	x	x
QTR requirements	§ 3175.104(a)	x	x	x	x
Configuration log requirements	§ 3175.104(b)	x	x	x	x
Event log	§ 3175.104(c)	x	x	x	x
Alarm log	§ 3175.104(d)	x	x	x	x
Accounting systems	§ 3175.104(e)	x	x	x	x

VL=Very-low-volume FMP; L=Low-volume FMP; H=High-volume FMP; VH=Very-high-volume FMP.
* = Immediate assessment for non-compliance under § 3175.150.
** = Applies to all high- and very-high-volume FMPs and FMPs installed at low- and very-low-volume FMPs after [EFFECTIVE DATE OF FINAL RULE]. See § 3175.50 for requirements pertaining to FMPs installed at low- and very-low-volume FMPs before EFFECTIVE DATE OF FINAL RULE].

§ 3175.101 Installation and operation of electronic gas measurement systems.

(a) The connection between the pressure taps and the secondary device must meet the following requirements:

(1) If gauge lines are used, they must:

(i) Have a nominal diameter of not less than ⅜-inch;

(ii) Be sloped upwards from the pressure taps at a minimum pitch of 1 inch per foot of length with no visible sag;

(iii) Have the same internal diameter along their entire length; and

(iv) Be no longer than 6 feet.

(2) Valves, including the valves in manifolds, must have a full-opening internal diameter of not less than ⅜-inch;

(3) There must not be any tees, except for the static-pressure line; and

(4) There must be no connections to any other devices or more than one differential pressure and static-pressure transducer. If the operator is employing redundancy verification, two differential pressure and two static-pressure transducers may be connected.

(b) Each FMP must include a display, which must:

(1) Be readable without the need for data-collection units, laptop computers, a password, or any special equipment;

(2) Be on site and in a location that is accessible to the AO;

(3) Include the units of measure for each required variable;

(4) For high- and very-high volume FMPs, display the software version;

(5) Display the previous-day's volume, as well as the following variables consecutively:

(i) Current flowing static pressure with units (psia or psig);

(ii) Current differential pressure (inches of water);

(iii) Current flowing temperature (°F); and

(iv) Current flow rate (Mcf/day or scf/day); and

(6) Either display or, at the request of the AO, provide an hourly or daily QTR (see § 3175.104(a)) no more than 31 days old showing the following information:

(i) Previous-period (for this section, previous period means at least 1 day prior, but no longer than 1 month prior) average differential pressure (inches of water);

(ii) Previous-period average static pressure with units (psia or psig); and

(iii) Previous-period average flowing temperature (°F);

(c) The following information must be maintained at the FMP in a legible condition, in compliance with § 3170.50(g) of this part, and accessible to the AO at all times:

(1) The unique meter identification number;

(2) Relative density (specific gravity);

(3) Elevation of or the atmospheric pressure at the FMP;

(4) Primary device information, such as orifice bore diameter (inches) or Beta or area ratio and discharge coefficient, as applicable;

(5) Reference inside diameter of the meter tube;

(6) Make, model, and location of approved isolating flow conditioners, if used;

(7) Location of the downstream end of 19-tube-bundle flow straighteners, if used;

(8) For self-contained EGM systems, make and model number of the system;

(9) For component-type EGM systems, make and model number of each transducer and the flow computer;

(10) URL and upper calibrated limit for each transducer;

(11) Location of the static-pressure tap (upstream or downstream);

(12) Last orifice plate or other BLM-approved primary-device inspection date;

(13) Last meter-tube inspection date; and

(14) Last secondary device verification date.

(d) The differential pressure, static pressure, and flowing temperature transducers must be operated between the lower and upper calibrated limits of the transducer. The BLM may approve the differential pressure to exceed the upper calibrated limit of the differential-pressure transducer for brief periods in plunger lift operations; however, the differential pressure may not exceed the URL.

(e) The flowing temperature of the gas must be continuously measured and used in the flow-rate calculations under API 21.1, Section 4 (incorporated by reference, see § 3175.30).

§ 3175.102 Verification and calibration of electronic gas measurement systems.

(a) *Transducer verification and calibration after installation or repair.* (1) Before performing any verification required in this section, the operator must perform a leak test in the manner prescribed in § 3175.92(a)(1).

(2) The operator must verify the points listed in API 21.1, Subsection 7.3.3 (incorporated by reference, see § 3175.30), by comparing the values from the certified test device with the values used by the flow computer to calculate flow rate. If any of these as-left readings vary from the test equipment reading by more than the tolerance determined by API 21.1, Subsection 8.2.2.2, Equation 24, then that transducer must be replaced and the new transducer must be tested under this paragraph.

(3) For absolute static-pressure transducers, the value of atmospheric pressure used when the transducer is vented to atmosphere must be calculated under Appendix A to this subpart, measured by a NIST-certified barometer with a stated accuracy of ±0.06 psi (±4 millibars) or better, or obtained from an absolute-pressure calibration device.

(4) Before putting a meter into service, the differential-pressure transducer must be tested at zero with full working pressure applied to both sides of the transducer. If the absolute value of the transducer reading is greater than the reference accuracy of the transducer, expressed in inches of water column, the transducer must be re-zeroed.

(b) *Routine verification frequency.* (1) If redundancy verification under paragraph (d) of this section is not used:

(i) The differential pressure, static pressure, and temperature transducers must be verified under the requirements of paragraph (c) of this section at the frequency specified in Table 1 to § 3175.100, in months; and

(ii) The time between any two verifications must not exceed the time frames shown in appendix B of this subpart; or

(iii) If an FMP is in non-flowing status at the time that a routine verification is due, a routine verification must be conducted within 15 days after flow is re-initiated. For the purpose of this section, non-flowing status means no flow goes through the FMP for at least 6 months due to seasonal outages or long-term maintenance or repair issues. Non-flowing status does not apply to meters at FMPs that flow intermittently on a daily or weekly basis.

(2) If redundancy verification under paragraph (d) of this section is used, the differential pressure, static pressure, and temperature transducers must be verified under the requirements of paragraph (d) of this section. In addition, the transducers must be verified under the requirements of paragraph (c) of this section at least annually.

(c) *Routine verification procedures.* Verifications must be performed according to API 21.1, Subsection 8.2 (incorporated by reference, see § 3175.30), with the following exceptions, additions, and clarifications:

(1) Before performing any verification required under this section, the operator must perform a leak test consistent with § 3175.92(a)(1).

(2) An as-found verification for differential pressure, static pressure and temperature must be conducted at the normal operating point of each transducer.

(i) The normal operating point is the mean value taken over a previous time period not less than 1 day or greater than 1 month. Acceptable mean values include means weighted based on flow time and flow rate.

(ii) For differential and static-pressure transducers, the pressure applied to the transducer for this verification must be within five percentage points of the normal operating point. For example, if the normal operating point for differential pressure is 17 percent of the upper calibrated limit, the normal point verification pressure must be between 12 percent and 22 percent of the upper calibrated limit.

(iii) For the temperature transducer, the water bath or test thermometer well must be within 20 °F of the normal operating point for temperature.

(3) If a transducer is calibrated, the as-left verification must include the normal operating point of that transducer, as defined in paragraph (c)(2) of this section.

(4) The as-found values for differential pressure obtained with the low side vented to atmospheric pressure must be corrected to working-pressure values using API 21.1, Annex H, Equation H.1 (incorporated by reference, see § 3175.30).

(5) The verification tolerance for differential and static pressure is defined by API 21.1, Subsection 8.2.2.2, Equation 24 (incorporated by reference, see § 3175.30). The verification tolerance for temperature is equivalent to the uncertainty of the temperature transmitter or 0.5 °F, whichever is greater.

(6) All required verification points must be within the verification tolerance before returning the meter to service.

(7) Before putting a meter into service, the differential-pressure transducer must be tested at zero with full working pressure applied to both sides of the transducer. If the absolute value of the transducer reading is greater than the reference accuracy of the transducer, expressed in inches of water column, the transducer must be re-zeroed.

(d) *Redundancy verification procedures.* Redundancy verifications must be performed as required under API 21.1, Subsection 8.2 (incorporated by reference, see § 3175.30), with the following exceptions, additions, and clarifications:

(1) The operator must identify which set of transducers is used for reporting on the OGOR (the primary transducers) and which set of transducers is used as a check (the check set of transducers);

(2) For every calendar month, the operator must compare the flow-time linear averages of differential pressure, static pressure, and temperature readings from the primary transducers with those from the check transducers;

(3) If for any transducer the difference between the averages exceeds the tolerance defined by the following equation:

$$Tolerance = \sqrt{A_p^2 + A_c^2}$$

Where:

A_p is the reference accuracy of the primary transducer and

A_c is the reference accuracy of the check transducer.

(4) The operator must verify both the primary and check transducer under paragraph (c) of this section within the first 5 days of the month following the month in which the redundancy verification was performed. For example, if the redundancy verification for March reveals that the difference in the flow-time linear averages of differential pressure exceeded the verification tolerance, both the primary and check differential-pressure transducers must be verified under paragraph (c) of this section by April 5th.

(e) *Documentation requirements.* The operator must retain documentation of each verification for the period required under § 3170.50 of this part, including calibration data for transducers that were replaced, and submit it to the BLM upon request.

(1) For routine verifications, this documentation must include:

(i) The information required in § 3170.50(g) of this part;

(ii) The time and date of the verification and the last verification date;

(iii) Primary device data (reference inside diameter of the meter tube and orifice plate or differential-device size, Beta or area ratio);

(iv) The type and location of taps (flange or pipe, upstream or downstream static tap);

(v) The flow computer make and model;

(vi) The make and model number for each transducer, for component-type EGM systems;

(vii) Transducer data (make, model, differential, static, temperature URL, and upper calibrated limit);

(viii) The normal operating points for differential pressure, static pressure, and flowing temperature;

(ix) Atmospheric pressure;

(x) Verification points (as-found and applied) for each transducer;

(xi) Verification points (as-left and applied) for each transducer, if calibration was performed;

(xii) The differential-device inspection date and condition (*e.g.,* clean, sharp edge, or surface condition);

(xiii) Verification equipment make, model, range, accuracy, and last certification date;

(xiv) The name, contact information, and affiliation of the person performing the verification and any witness, if applicable; and

(xv) Remarks, if any.

(2) For redundancy verification checks, this documentation must include;

(i) The information required in § 3170.50(g) of this part;

(ii) The month and year for which the redundancy check applies;

(iii) The makes, models, upper range limits, and upper calibrated limits of the primary set of transducers;

(iv) The makes, models, upper range limits, and upper calibrated limits of the check set of transducers;

(v) The information required in API 21.1, Annex I (incorporated by reference, see § 3175.30);

(vii) The tolerance for differential pressure, static pressure, and temperature as calculated under paragraph (d)(2) of this section; and

(viii) Whether or not each transducer required verification under paragraph (c) of this section.

(f) *Notification of verification.* (1) For verifications performed after installation or following repair, the operator must notify the AO at least 1 business day before conducting the verifications;

(2) For routine verifications, the operator must notify the AO at least 72 hours before conducting the verification or submit a monthly or quarterly verification schedule to the AO in advance that identifies the FMPs that will be verified during that month or quarter.

(g) *Amended reports.* If, during the verification, the combined errors in as-found differential pressure, static pressure, and flowing temperature taken at the normal operating points tested result in a flow-rate error greater than 2 percent and 2 Mcf/day, the volumes reported on the OGOR and on royalty reports submitted to ONRR must be corrected beginning with the date that the inaccuracy occurred. If that date is unknown, the volumes must be corrected beginning with the production month that includes the date that is half-way between the date of the last verification and the date of the present verification. See the example in § 3175.92(f).

(h) *Test equipment requirements.* (1) Test equipment used to verify or calibrate transducers at an FMP must be certified at least every 2 years. Documentation of the certification must be on site and made available to the AO during all verifications and must show:

(i) The test equipment serial number, make, and model;

(ii) The date on which the recertification took place;

(iii) The range of the test equipment; and

(iv) The uncertainty determined or verified as part of the recertification.

(2) Test equipment used to verify or calibrate transducers at an FMP must meet the following accuracy standards:

(i) The accuracy of the test equipment, stated in actual units of measure, must be no greater than 0.5 times the reference accuracy of the transducer being verified, also stated in actual units of measure; or

(ii) The equipment must have a stated accuracy of at least 0.10 percent of the upper calibrated limit of the transducer being verified.

§ 3175.103 Flow rate, volume, and average value calculation.

(a) The flow rate must be calculated as follows:

(1) For flange-tapped orifice plates, the flow rate must be calculated under:

(i) API 14.3.3 (2013), Section 4 and Section 5 (incorporated by reference, see § 3175.30); and

(ii) AGA Report No. 8 Part 1 or Part 2 (both incorporated by reference, see § 3175.30), for supercompressibility.

(2) For primary devices other than flange-tapped orifice plates, for which there are no industry standards, the flow rate must be calculated under the equations and procedures recommended by the PMT and approved by the BLM, specific to the make, model, size, and area ratio of the primary device used.

(b) Atmospheric pressure used to convert static pressure in psig to static pressure in psia must be determined using appendix A of this subpart.

(c) Hourly and daily gas volumes, average values of the live input variables, flow time, and integral value or average extension as required under § 3175.104 must be determined under API 21.1, Section 4 and Annex B (incorporated by reference, see § 3175.30).

§ 3175.104 Logs and records.

(a) The operator must retain, and submit to the BLM upon request, the original, unaltered, unprocessed, and unedited daily and hourly QTRs, which must contain the information identified in API 21.1, Subsection 5.2 (incorporated by reference, see § 3175.30), with the following additions and clarifications:

(1) The information required in § 3170.50(g) of this part;

(2) The volume, flow time, and integral value or average extension must be reported to at least 5 significant digits. The average differential pressure, static pressure, and temperature as calculated in § 3175.103(c), must be reported to at least 3 significant digits; and

(3) A statement of whether the operator has submitted the integral value or average extension.

(b) The operator must retain, and submit to the BLM upon request, the

original, unaltered, unprocessed, and unedited configuration log, which must contain the information specified in API 21.1, Subsection 5.4 (including the flow-computer snapshot report in Subsection 5.4.2), and Annex G (incorporated by reference, see § 3175.30), with the following additions and clarifications:

(1) The information required in § 3170.50(g) of this part;

(2) Software/firmware identifiers under API 21.1, Subsection 5.3 (incorporated by reference, see § 3175.30);

(3) For very-low-volume FMPs only, the fixed temperature, if not continuously measured (°F); and

(4) The static-pressure tap location (upstream or downstream);

(c) The operator must retain, and submit to the BLM upon request, the original, unaltered, unprocessed, and unedited event log. The event log must comply with API 21.1, Subsection 5.5 (incorporated by reference, see § 3175.30), with the following additions and clarifications: The event log must have sufficient capacity and must be retrieved and stored at intervals frequent enough to maintain a continuous record of events as required under § 3170.50 of this part, or the life of the FMP, whichever is shorter.

(d) The operator must retain an alarm log and provide it to the BLM upon request. The alarm log must comply with API 21.1, Subsection 5.6 (incorporated by reference, see § 3175.30).

(e) Records may only be submitted from measurement data system names and versions and flow computer makes and models that have been approved by the BLM (see § 3175.41).

§ 3175.110 Gas sampling and analysis.

The standards and requirements in this section apply to all gas sampling and analyses. (Note: Table 1 to this section lists the standards in this subpart and the API standards that the operator must follow to take a gas sample, analyze the gas sample, and report the findings of the gas analysis. A requirement applies when a column is marked with an ''x'' or a number.)

TABLE 1 TO § 3175.110: GAS SAMPLING AND ANALYSIS

Subject	Reference	VL	L	H	VH
Methods of sampling	§ 3175.111(a)	x	x	x	x
Heating requirements	§ 3175.111(b)	x	x	x	x
Samples taken from probes	§ 3175.112(a)	n/a	x	x	x
Location of sample probe	§ 3175.112(b)	n/a	x	x	x
Sample probe design and type	§ 3175.112(c)	n/a	x	x	x
Sample tubing	§ 3175.112(d)	n/a	x	x	x
Spot sample while flowing	§ 3175.113(a)	x	x	x	x
Notification of spot samples	§ 3175.113(b)	x	x	x	x
Sample cylinder requirements	§ 3175.113(c)	x	x	x	x
Spot sampling using portable GCs	§ 3175.113(d)	x	x	x	x
Allowable methods of spot sampling	§ 3175.114(a)	x	x	x	x
Low pressure sampling	§ 3175.114(b)	x	x	x	x
Spot sampling frequency, low- and very-low-volume FMPs (in months) *.	§ 3175.115(a)	12	6	n/a	n/a
Initial spot sampling frequency, high- and very-high-volume FMPs (in months) *.	§ 3175.115(a)	n/a	n/a	3	1
Adjustment of spot sampling frequencies, high- and very-high-volume FMPs.	§ 3175.115(b)	n/a	n/a	x	x
Maximum time between samples	§ 3175.115(c)	x	x	x	x
Installation of composite sampler or on-line GC	§ 3175.115(d)	x	x	x	x
Removal of composite sampler or on-line GC	§ 3175.115(e)	x	x	x	x
Composite sampling methods	§ 3175.116	x	x	x	x
On-line gas chromatographs	§ 3175.117	x	x	x	x
Gas chromatograph requirements	§ 3175.118	x	x	x	x
Minimum components to analyze	§ 3175.119(a)	x	x	x	x
C_{9+} analysis	§ 3175.119(b) and (c)	n/a	n/a	x	x
Gas analysis report requirements	§ 3175.120	x	x	x	x
Effective date of spot and composite samples	§ 3175.121	x	x	x	x

VL=Very-low-volume FMP; L=Low-volume FMP; H=High-volume FMP.
VH=Very-high-volume FMP.
* = Immediate assessment for non-compliance under § 3175.150.

§ 3175.111 General sampling requirements.

(a) Samples must be taken by one of the following methods:

(1) Spot sampling under §§ 3175.113 to 3175.115;

(2) Flow-proportional composite sampling under § 3175.116; or

(3) On-line gas chromatograph under § 3175.117.

(b) At all times during the sampling process, the minimum temperature of all gas sampling components must be the lesser of:

(1) The flowing temperature of the gas measured at the time of sampling; or

(2) 30 °F above the calculated hydrocarbon dew point of the gas.

§ 3175.112 Sampling probe and tubing.

(a) *Samples taken from probes.* All gas samples must be taken from a sample probe that complies with the requirements of paragraphs (b) and (c) of this section.

(b) *Location of sample probe.* (1) The sampling probe must be located as specified in § 3175.80(p).

(2) The sample probe must be exposed to the same ambient temperature as the primary device. The operator may accomplish this by physically locating the sample probe in the same ambient temperature conditions as the primary device (such as in a heated meter house) or by installing insulation and/or heat tracing along the entire meter run. If the operator chooses to use insulation to comply with this requirement, the AO may prescribe the quality of the insulation based on site-specific factors such as ambient temperature, flowing

temperature of the gas, composition of the gas, and location of the sample probe in relation to the orifice plate (*i.e.,* inside or outside of a meter house).

(c) *Sample probe design and type.* (1) Sample probes must be constructed from stainless steel.

(2) If a regulating type of sample probe is used, the pressure-regulating mechanism must be inside the pipe or maintained at a temperature of at least 30 °F above the hydrocarbon dew point of the gas.

(3) The sample probe length must be the shorter of:

(i) The length necessary to place the collection end of the probe in the center one-third of the pipe cross-section; or

(ii) The recommended length of the probe in Table 1 in API 14.1, Subsection 6.4 (incorporated by reference, see § 3175.30).

(4) The use of membranes, screens, or filters at any point in the sample probe is prohibited.

(d) *Sample tubing.* All components of the sampling system through or into which gas flows during the sampling process must be constructed of stainless steel or nylon 11. This includes, but is not limited to, the sample probe, the sample line including valves and nipples, and the sample cylinder.

§ 3175.113 Spot samples—general requirements.

(a) *Sampling while flowing.* (1) The FMP must be flowing when a sample is taken.

(2) If an FMP is in a non-flowing status at the time that a sample is due, a sample must be taken within 15 days after flow is re-initiated. Documentation of the non-flowing status of the FMP must be entered into GARVS as required under § 3175.120(f). For the purpose of this section, non-flowing status means no flow goes through the FMP for at least one month due to seasonal outages or long-term maintenance or repair issues. Non-flowing status does not apply to meters at FMPs that flow intermittently on a daily or weekly basis.

(b) *Notification of spot samples.* The operator must submit a monthly or quarterly schedule of spot samples to the AO in advance of taking samples that identifies the FMPs to be sampled during the month or quarter.

(c) *Sample cylinder requirements.* Sample cylinders must:

(1) Comply with API 14.1, Subsection 9.1 (incorporated by reference, see § 3175.30);

(2) Have a minimum capacity of 300 cubic centimeters; and

(3) Be cleaned before sampling in accordance with GPA 2166–17, Appendix A (incorporated by reference, see § 3175.30), or an equivalent method. The operator must maintain documentation of cleaning (see § 3170.50 of this part), have the documentation available on site during sampling, and provide it to the BLM upon request. Equivalent method(s) of cleaning must be approved by the BLM through the PMT.

(d) *Spot sampling using portable gas chromatographs.* (1) The use of sampling separators is prohibited.

(2) The sample port and inlet to the sample line must be purged using the gas being sampled before completing the connection between them.

(3) The portable GC must be operated, verified, and calibrated under § 3175.118.

(4) The documentation of verification or calibration required in § 3175.118(d) must be available for inspection by the BLM at the time of sampling.

(5) Regulator assembly must be heated and/or insulated in a manner to ensure they are maintained at least 30 °F above the hydrocarbon dew point during sampling.

(6) The regulator must be set to deliver the sample gas to the portable GC at the same pressure at which it was validated or calibrated.

(7) The first run at each location must not be used to determine the heating value.

(8) Vent the sample line through the sample valve at the chromatograph for a minimum of 2 minutes before sampling at each location. If the prior sample contained high H_2S, the sample system must be purged with ultra-high purity helium instead of sample gas before sampling.

§ 3175.114 Spot samples—allowable methods.

(a) Spot samples must be obtained using one of the following methods:

(1) *Purging—fill and empty method.* Samples taken using this method must comply with GPA 2166–17, Section 9.1 (incorporated by reference, see § 3175.30);

(2) *Helium ''pop'' method.* Samples taken using this method must comply with GPA 2166–17, Section 9.5 (incorporated by reference, see § 3175.30). The operator must maintain documentation demonstrating that the cylinder was evacuated and pre-charged before sampling and make the documentation available to the AO upon request;

(3) *Floating piston cylinder method.* Samples taken using this method must comply with GPA 2166–17, Sections 9.7.1 to 9.7.3 (incorporated by reference, see § 3175.30). The operator must maintain documentation of the seal material and type of lubricant used and make the documentation available to the AO upon request;

(4) *Portable gas chromatograph.* Samples taken using this method must comply with § 3175.118; or

(5) *Alternative methods.* Other methods approved by the BLM (through the PMT) and posted at *www.blm.gov.*

(b) If the operator uses either a purging—fill and empty method or a helium ''pop'' method, and if the flowing pressure at the sample port is less than or equal to 15 psig, the operator may also employ a vacuum-gathering system. Samples taken using a vacuum-gathering system must comply with API 14.1, Subsection 11.10 (incorporated by reference, see § 3175.30), and the samples must be obtained from the discharge of the vacuum pump.

§ 3175.115 Spot samples—frequency.

(a) Unless otherwise required under paragraph (b) of this section, spot samples for all FMPs must be taken and analyzed at the frequency (once during every period, stated in months) prescribed in Table 1 to § 3175.110.

(b) After the time frames listed in paragraph (b)(1) of this section, the BLM may change the required sampling frequency for high-volume and very-high-volume FMPs if the BLM determines that the sampling frequency required in Table 1 in § 3175.110 is not sufficient to achieve the heating value uncertainty levels required in § 3175.31(b).

(1) *Timeframes for implementation.* (i) For high-volume FMPs, the BLM may change the sampling frequency no sooner than 2 years after the FMP begins measuring gas or [DATE FOUR YEARS AFTER EFFECTIVE DATE OF FINAL RULE], whichever is later; and

(ii) For very-high-volume FMPs, the BLM may change the sampling frequency or require compliance with paragraph (b)(5) of this section no sooner than 1 year after the FMP begins measuring gas or [DATE THREE YEARS AFTER EFFECTIVE DATE OF FINAL RULE], whichever is later.

(2) *Calculations on sampling frequencies.* The BLM will calculate the new sampling frequency needed to achieve the heating value uncertainty levels required in § 3175.31(b). The BLM will base the sampling frequency calculation on the heating value variability. The BLM will notify the operator of the new sampling frequency.

(3) *Duration of adjusted sampling frequencies.* The new sampling frequency will remain in effect until the

heating value variability justifies a different frequency.

(4) *Adjusted spot-sampling frequency limitation.* The new sampling frequency will not be more frequent than once every 2 weeks nor less frequent than once every 6 months.

(c) The time between any two samples must not exceed the time frames shown in appendix B of this subpart.

(d) If a composite sampling system or an on-line GC is installed under § 3175.116 or § 3175.117, it must be installed and operational no more than 90 days after the due date of the next sample.

(e) The required sampling frequency for an FMP at which a composite sampling system or an on-line gas chromatograph is removed from service is prescribed in paragraph (a) of this section.

§ 3175.116 Composite sampling methods.

(a) Composite samplers must be flow-proportional.

(b) Samples must be collected using a positive-displacement pump.

(c) Sample cylinders must comply with § 3175.113(c) and must be sized to ensure the cylinder capacity is not exceeded within the normal collection frequency.

(d) All components of the sampling system must be heated to at least 30 °F above the HCDP at all times.

§ 3175.117 On-line gas chromatographs.

(a) On-line GCs must be installed, operated, and maintained in accordance with GPA 2166–17, Appendix D (incorporated by reference, see § 3175.30), and the manufacturer's specifications, instructions, and recommendations.

(b) The GC must comply with the verification and calibration requirements of § 3175.118. The results of all verifications must be submitted to the AO upon request.

(c) Upon request, the operator must submit to the AO the manufacturer's specifications and installation and operational recommendations.

§ 3175.118 Gas chromatograph requirements.

(a) All GCs must be installed, operated, and calibrated under GPA 2261–19 (incorporated by reference, see § 3175.30).

(b) Samples must be analyzed until the un-normalized sum of the mole percent of all gases analyzed is between 97 and 103 percent.

(c) A GC may not be used to analyze any sample from an FMP until the verification meets the standards of this paragraph (c).

(1) GCs must be verified under GPA 2261–19, Section 6 (incorporated by reference, see § 3175.30), not less than once every 7 days.

(2) All gases used for verification and calibration must meet the standards of GPA 2198–16, Sections 3 and 4 (incorporated by reference, see § 3175.30).

(3) All new gases used for verification and calibration must be authenticated prior to verification or calibration under the standards of GPA 2198–16, Section 6 (incorporated by reference, see § 3175.30).

(4) The gas used to calibrate a GC must be maintained under GPA 2198–16, Section 5 (incorporated by reference, see § 3175.30).

(5) If the composition of the gas used for verification as determined by the GC varies from the certified composition of the gas used for verification by more than the reproducibility values listed in GPA 2261–19, Section 10 (incorporated by reference, see § 3175.30), the GC must be calibrated under GPA 2261–19, Section 6 (incorporated by reference, see § 3175.30).

(6) If the GC is calibrated, it must be re-verified under paragraph (c)(5) of this section.

(d) The operator must retain documentation of the verifications for the period required under § 3170.50 of this part, and make it available to the BLM upon request. The documentation must include:

(1) The components analyzed;

(2) The response factor for each component;

(3) The peak area for each component;

(4) The mole percent of each component as determined by the GC;

(5) The mole percent of each component in the gas used for verification;

(6) The difference between the mole percents determined in paragraphs (d)(4) and (5) of this section, expressed in relative percent;

(7) Evidence that the gas used for verification and calibration:

(i) Meets the requirements of paragraph (c)(2) of this section, including a unique identification number of the calibration gas used, the name of the supplier of the calibration gas, and the certified list of the mole percent of each component in the calibration gas;

(ii) Was authenticated under paragraph (c)(3) of this section prior to verification or calibration, including the fidelity plots; and

(iii) Was maintained under paragraph (c)(4) of this section, including the fidelity plot made as part of the calibration run;

(8) The chromatograms generated during the verification process;

(9) The time and date the verification was performed; and

(10) The name and affiliation of the person performing the verification.

§ 3175.119 Components to analyze.

(a) The gas must be analyzed for the following components:

(1) Methane;

(2) Ethane;

(3) Propane;

(4) Iso Butane;

(5) Normal Butane;

(6) Pentanes;

(7)(i) Hexanes-plus (C_6+); or

(ii) Nonanes-plus (C_9+), hexanes, heptanes, and octanes;

(8) Carbon dioxide; and

(9) Nitrogen.

(b) When the concentration of C_6+ exceeds 1 mole percent, a C_9+ analysis must be conducted.

(c) In lieu of testing each sample for the components required under paragraph (b) of this section, the operator may periodically test for C_9+ and adjust the assumed C_6+ heating value to match the heating value of hexanes, heptanes, octanes, and C_9+ from the C_9+ analysis (see § 3175.126(a)(3)(ii)). The adjusted C_6+ heating value must be applied to the mole percent of C_6+ analyses until the next C_9+ analysis is done under paragraph (b) of this section. The minimum analysis frequency for the components listed in paragraph (b) of this section is as follows:

(1) For high-volume FMPs, once per year; and

(2) For very-high-volume FMPs, once every 6 months.

§ 3175.120 Gas analysis report requirements.

(a) The gas analysis report must contain the following information:

(1) The information required in § 3170.50(g) of this part;

(2) The date and time that the sample for spot samples was taken or, for composite samples, the date the cylinder was installed and the date the cylinder was removed;

(3) The date and time of the analysis;

(4) For spot samples, the effective date, if other than the date of sampling;

(5) For composite samples, the effective start and end date;

(6) The name of the laboratory where the analysis was performed, if applicable;

(7) The device used for analysis (*i.e.,* GC, calorimeter, or mass spectrometer);

(8) The make and model of analyzer;

(9) The date of last calibration or verification of the analyzer;

(10) The flowing temperature at the time of sampling;

(11) The flowing pressure at the time of sampling, including units of measure (psia or psig);

(12) The flow rate at the time of sampling;

(13) The ambient air temperature at the time of sampling;

(14) Whether or not heat trace or any other method of heating was used;

(15) The type of sample (*i.e.,* spot-cylinder, spot-portable GC, composite);

(16) The sampling method if spot-cylinder (*e.g.,* fill and empty, helium pop);

(17) A list of the components of the gas tested;

(18) The total un-normalized mole percent of the components tested;

(19) The normalized mole percent of each component tested, including a summation of those mole percents;

(20) The ideal heating value (Btu/scf);

(21) The real heating value (Btu/scf), dry basis;

(22) The hexanes-plus heating value (Btu/scf), if applicable;

(23) The pressure base and temperature base;

(24) The relative density; and

(25) The name of the company obtaining the gas sample.

(b) Components that are listed on the analysis report, but not tested, must be annotated as such.

(c) The heating value and relative density must be calculated under API 14.5 (incorporated by reference, see § 3175.30).

(d) The base supercompressibility must be calculated under AGA Report No. 8, Part 1 or Part 2 (incorporated by reference, see § 3175.30).

(e) The operator must submit all gas analysis reports to the BLM within 15 days of the due date for the sample as specified in § 3175.115.

(f) The operator must submit all gas analysis reports and other required information electronically through the GARVS. The BLM will consider granting a variance to the electronic-submission requirement only in cases where the operator demonstrates that it is a small business, as defined by the U.S. Small Business Administration, and does not have access to the internet.

§ 3175.121 Effective date of a spot or composite gas sample.

(a) Unless otherwise specified on the gas analysis report, the effective date of a spot sample is the date on which the sample was taken.

(b) The effective date of a spot gas sample may be no later than the first day of the production month following the operator's receipt of the laboratory analysis of the sample.

(c) Unless otherwise specified on the gas analysis report, the effective date of a composite sample is the first of the month in which the sample was removed.

(d) The provisions of this section apply only to OGORs, QTRs, and gas sample reports generated after [EFFECTIVE DATE OF FINAL RULE].

§ 3175.125 Calculation of heating value and volume.

(a) *Methodology.* The heating value of the gas sampled must be calculated as follows:

(1) Gross heating value is defined by API 14.5, Subsection 3.7 (incorporated by reference, see § 3175.30) and must be calculated under API 14.5, Subsection 7.1 (incorporated by reference, see § 3175.30); and

(2) Real heating value must be calculated by dividing the gross heating value of the gas calculated under paragraph (a)(1) of this section by the compressibility factor of the gas at 14.73 psia and 60 °F.

(b) *Average heating value determination.* (1) If a lease, unit PA, or CA has more than one FMP without an FMP number, the average heating value for the lease, unit PA, or CA for FMPs without an FMP number for a reporting month must be the volume-weighted average of heating values, calculated as follows:

$$\overline{HV} = \frac{\sum_{i=1}^{i=n}\left(HV_i \times V_i\right)}{\sum_{i=1}^{i=n} V_i}$$

where:

$\overline{HV}$ = the average heating value for the lease, unit PA, or CA, for the reporting month, in Btu/scf

HV_i = the heating value for FMP_i, during the reporting month (see § 3175.120(b)(2) if an FMP has multiple heating values during the reporting month), in Btu/scf

V_i = the volume measured by FMPi, during the reporting month, in Btu/scf

Subscript i represents each FMP for the lease, unit PA, or CA

n = the number of FMPs for the lease, unit PA, or CA

(2) If the effective date of a heating value for an FMP is other than the first day of the reporting month, the average heating value of the FMP must be the volume-weighted average of heating values, determined as follows:

$$HV_i = \frac{\sum_{j=1}^{j=m}\left(HV_{i,j} \times V_{i,j}\right)}{\sum_{j=1}^{j=m} V_{i,j}}$$

where:

HV_i = the heating value for FMP_i, in Btu/scf

$HV_{i,j}$ = the heating value for FMP_i, for partial month j, in Btu/scf

$V_{i,j}$ = the volume measured by FMP_i, for partial month j, in Btu/scf

Subscript i represents each FMP for the lease, unit PA, or CA

Subscript j represents a partial month for which heating value $HV_{i,j}$ is effective

m = the number of different heating values in a reporting month for an FMP

(c) *Volume calculation methodology.* The volume must be determined under §§ 3175.94 (mechanical recorders) or 3175.103(c) (EGM systems).

§ 3175.126 Reporting of heating value and volume.

(a) The gross heating value and real heating value, or average gross heating value and average real heating value, as applicable, derived from all samples and analyses must be reported on the OGOR in units of Btu/scf under the following conditions:

(1) Containing no water vapor (''dry''), unless the water vapor content has been determined through actual on-site measurement, included in heating value calculations, and reported on the gas analysis report. The heating value may not be reported on the basis of an assumed water-vapor content. Acceptable methods of measuring water vapor are:

(i) Makes and models of chilled mirrors approved by the BLM and placed on the list of approved equipment and methods maintained at *www.blm.gov;*

(ii) Automated chilled mirrors approved by the BLM and placed on the list of approved equipment and methods maintained at *www.blm.gov;* and

(iii) Other equipment and methods approved by the BLM and placed on the list of approved equipment and methods maintained at *www.blm.gov;*

(2) Adjusted to a pressure of 14.73 psia and a temperature of 60 °F;

(3) For samples analyzed under § 3175.119(a), and notwithstanding any provision of a contract between the operator and a purchaser or transporter, the composition of hexanes-plus must have a heating value not less than:

(i) 5129 Btu/scf (equivalent heating value of 60 percent hexanes, 30 percent heptanes, and 10 percent octanes.); or

(ii) The heating value of the C_9+ composition determined under § 3175.119(c); and

(4) For samples analyzed under § 3175.119(b), and notwithstanding any provision of a contract between the operator and purchaser or transporter, the composition of C_9+ must have a heating value not less than 6,996 Btu/scf.

(b) The volume for royalty purposes must be reported on the OGOR in units of Mcf as follows:

(1) The volume must not be adjusted for water-vapor content or any other factors that are not included in the calculations required in § 3175.94 or § 3175.103; and

(2) The volume must match the monthly volume(s) shown in the unedited QTR(s) or integration statement(s) unless edits to the data are documented under paragraph (c) of this section.

(c) *Edits and adjustments to reported volume or heating value.* (1) If for any reason there are measurement errors stemming from an equipment malfunction that results in discrepancies to the calculated volume or heating value of the gas, the volume or heating value reported during the period in which the volume or heating value error persisted must be estimated.

(2) All edits made to the data before the submission of the OGOR must be documented and include verifiable justifications for the edits made. This documentation must be maintained under § 3170.50 of this part and must be submitted to the BLM upon request.

(3) All values on daily and hourly QTRs that have been changed or edited must be clearly identified and must be cross referenced to the justification required in paragraph (c)(2) of this section.

(4) The volumes reported on the OGOR must be corrected beginning with the date that the inaccuracy occurred. If that date is unknown, the volumes must be corrected beginning with the production month that includes the date that is half way between the date of the previous verification and the most recent verification date.

§ 3175.130 Requirements for gas storage agreement measurement points (GSAMPs).

Gas storage agreement measurement points must meet the requirements of this subpart subject to the following specifications and exemptions:

(a) A meter at a GSAMP is:

(1) Very-low volume if it measures 800 Mcf/day or less over the averaging period;

(2) Low volume if it measures more than 800Mcf/day and 4,700 Mcf/day or less over the averaging period; or

(3) High volume if it measures more than 4,700 Mcf/day over the averaging period.

(b) A GSAMP is exempt from the following sections of this subpart:

(1) Section 3175.110;

(2) Section 3175.80(p);

(3) Section 3175.120;

(4) Section 3175.121;

(5) Section 3175.125(a) and (b); and

(6) Section 3175.126.

§ 3175.140 Temporary measurement.

Measurement equipment at any temporary measurement facility must meet the requirements of this subpart with the following exceptions:

(a) Routine mechanical recorder verifications under § 3175.92(b) are not required;

(b) Routine EGM system verification under § 3175.102(b) are not required;

(c) Basic meter-tube inspections under § 3175.80(j) are not required; and

(d) Detailed meter-tube inspections under § 3175.80(k)(1) are not required.

§ 3175.150 Immediate assessments.

(a) Certain instances of noncompliance warrant the imposition of immediate assessments upon discovery. Imposition of any of these assessments does not preclude other appropriate enforcement actions.

(b) The BLM will issue the assessments for the violations listed as follows:

TABLE 1 TO § 3175.150—VIOLATIONS SUBJECT TO AN IMMEDIATE ASSESSMENT

Violation:	Assessment amount per violation:
1. New FMP orifice-plate inspections were not conducted as required by § 3175.80(e)	$1,000
2. Routine FMP orifice-plate inspections were not conducted as required by § 3175.80(f)	1,000
3. Basic meter-tube inspections were not conducted as required by § 3175.80(j)	1,000
4. Detailed meter-tube inspections were not conducted as required by § 3175.80(k)	1,000
5. An initial EGM-system verification was not conducted as required by § 3175.102(a)	1,000
6. Routine EGM-system verifications were not conducted as required by § 3175.102(b)	1,000
7. Spot samples for low-volume and very-low-volume FMPs were not taken as required by § 3175.115(a)	1,000
8. Spot samples for high- and very-high-volume FMPs were not taken as required by § 3175.115(a) and (b)	1,000

BILLING CODE 4310–84–P

Appendix A to Subpart 3175 – Table of Atmospheric Pressures

Elevation (ft msl)	Atmos. Pressure (psi)	Elevation (ft msl)	Atmos. Pressure (psi)	Elevation (ft msl)	Atmos. Pressure (psi)
0	14.70	**4,000**	12.70	**8,000**	10.92
100	14.64	4,100	12.65	8,100	10.88
200	14.59	4,200	12.60	8,200	10.84
300	14.54	4,300	12.56	8,300	10.80
400	14.49	4,400	12.51	8,400	10.76
500	14.43	4,500	12.46	8,500	10.72
600	14.38	4,600	12.42	8,600	10.68
700	14.33	4,700	12.37	8,700	10.63
800	14.28	4,800	12.32	8,800	10.59
900	14.23	4,900	12.28	8,900	10.55
1,000	14.17	**5,000**	12.23	**9,000**	10.51
1,100	14.12	5,100	12.19	9,100	10.47
1,200	14.07	5,200	12.14	9,200	10.43
1,300	14.02	5,300	12.10	9,300	10.39
1,400	13.97	5,400	12.05	9,400	10.35
1,500	13.92	5,500	12.01	9,500	10.31
1,600	13.87	5,600	11.96	9,600	10.27
1,700	13.82	5,700	11.92	9,700	10.23
1,800	13.77	5,800	11.87	9,800	10.19
1,900	13.72	5,900	11.83	9,900	10.15
2,000	13.67	**6,000**	11.78	**10,000**	10.12

2,100	13.62	6,100	11.74	10,100	10.08
2,200	13.57	6,200	11.69	10,200	10.04
2,300	13.52	6,300	11.65	10,300	10.00
2,400	13.47	6,400	11.61	10,400	9.96
2,500	13.42	6,500	11.56	10,500	9.92
2,600	13.37	6,600	11.52	10,600	9.88
2,700	13.32	6,700	11.48	10,700	9.84
2,800	13.27	6,800	11.43	10,800	9.81
2,900	13.22	6,900	11.39	10,900	9.77
3,000	13.17	**7,000**	11.35	**11,000**	9.73
3,100	13.13	7,100	11.30	11,100	9.69
3,200	13.08	7,200	11.26	11,200	9.65
3,300	13.03	7,300	11.22	11,300	9.62
3,400	12.98	7,400	11.18	11,400	9.58
3,500	12.93	7,500	11.13	11,500	9.54
3,600	12.89	7,600	11.09	11,600	9.50
3,700	12.84	7,700	11.05	11,700	9.47
3,800	12.79	7,800	11.01	11,800	9.43
3,900	12.74	7,900	10.97	11,900	9.39

ft msl = feet above mean sea level

Calculated as:

$$P_{atm} = 14.696 \text{ x } (1\text{-}0.00000686\,E)^{5.25577}$$

Where:

P_{atm} is atmospheric pressure, psi

E is meter elevation, feet above mean sea level

From: U.S. Standard Atmosphere, 1976, U.S.

Government Printing Office, Washington, D.C., 1976.

APPENDIX B TO SUBPART 3175—MAXIMUM TIME BETWEEN REQUIRED ACTIONS

If the required frequency is once every:	Then the maximum time between required actions (in days) is:
2 weeks	18
Month	45
2 months	75
3 months	105
6 months	195
12 months	395

[FR Doc. 2020–16393 Filed 9–2–20; 4:15 pm]

BILLING CODE 4310–84–C

FEDERAL REGISTER

Vol. 85 Thursday,

No. 176 September 10, 2020

Part III

Environmental Protection Agency

40 CFR Part 63

National Emission Standards for Hazardous Air Pollutants: Iron and Steel Foundries Major Source Residual Risk and Technology Review and Area Source Technology Review; Final Rule

ENVIRONMENTAL PROTECTION AGENCY

40 CFR Part 63

[EPA–HQ–OAR–2019–0373; FRL–10010–46–OAR]

RIN 2060–AT30

National Emission Standards for Hazardous Air Pollutants: Iron and Steel Foundries Major Source Residual Risk and Technology Review and Area Source Technology Review

AGENCY: Environmental Protection Agency (EPA).

ACTION: Final rule.

SUMMARY: This action finalizes the residual risk and technology review (RTR) conducted for the major source Iron and Steel Foundries source category and the technology review for the area source Iron and Steel Foundries source category regulated under national emission standards for hazardous air pollutants (NESHAP). In addition, we are taking final action to remove exemptions for periods of startup, shutdown, and malfunction (SSM) and to specify that emissions standards apply at all times. These final amendments also require electronic reporting of performance test results and compliance reports and make minor corrections and clarifications to a few other rule provisions for major sources and area sources.

DATES: This final rule is effective on September 10, 2020. The incorporation by reference of certain publications listed in the rule is approved by the Director of the Federal Register as of January 2, 2008.

ADDRESSES: The U.S. Environmental Protection Agency (EPA) has established a docket for this action under Docket ID No. EPA–HQ–OAR–2019–0373. All documents in the docket are listed on the *https://www.regulations.gov/* website. Although listed, some information is not publicly available, *e.g.,* Confidential Business Information or other information whose disclosure is restricted by statute. Certain other material, such as copyrighted material, is not placed on the internet and will be publicly available only in hard copy form. Publicly available docket materials are available electronically through *https://www.regulations.gov/.* Out of an abundance of caution for members of the public and our staff, the EPA Docket Center and Reading Room was closed to public visitors on March 31, 2020, to reduce the risk of transmitting COVID–19. Our Docket Center staff will continue to provide remote customer service via email, phone, and webform. There is a temporary suspension of mail delivery to the EPA, and no hand deliveries are currently accepted. For further information and updates on EPA Docket Center services and the current status, please visit us online at *https://www.epa.gov/dockets.*

FOR FURTHER INFORMATION CONTACT: For questions about this final action, contact Phil Mulrine, Sector Policies and Programs Division (D243–02), Office of Air Quality Planning and Standards, U.S. Environmental Protection Agency, Research Triangle Park, North Carolina 27711; telephone number: (919) 541–5289; fax number: (919) 541–4991; and email address: *mulrine.phil@epa.gov.* For specific information regarding the risk modeling methodology, contact Ted Palma, Health and Environmental Impacts Division (C539–02), Office of Air Quality Planning and Standards, U.S. Environmental Protection Agency, Research Triangle Park, North Carolina 27711; telephone number: (919) 541–5470; fax number: (919) 541–0840; and email address: *palma.ted@epa.gov.* For information about the applicability of the NESHAP to a particular entity, contact Maria Malave, Office of Enforcement and Compliance Assurance, U.S. Environmental Protection Agency, WJC South Building (Mail Code 2227A), 1200 Pennsylvania Ave. NW, Washington, DC 20460; telephone number: (202) 564–7027; and email address: *malave.maria@epa.gov.*

SUPPLEMENTARY INFORMATION:

Preamble acronyms and abbreviations. We use multiple acronyms and terms in this preamble. While this list may not be exhaustive, to ease the reading of this preamble and for reference purposes, the EPA defines the following terms and acronyms here:

ATSDR Agency for Toxic Substances and Disease Registry
CAA Clean Air Act
CalEPA California EPA
CDX Central Data Exchange
CEDRI Compliance and Emissions Data Reporting Interface
CFR Code of Federal Regulations
CRA Congressional Review Act
e.g. exempli gratia (for example)
EPA Environmental Protection Agency
FQPA Food Quality Protection Act
GACT generally available control technology
HAP hazardous air pollutant(s)
HQ hazard quotient
i.e. id est (that is)
IRIS Integrated Risk Information System
km kilometer
MACT maximum achievable control technology
MIR maximum individual risk
MOA mode of action
NAICS North American Industry Classification System
NESHAP national emission standards for hazardous air pollutants
NTTAA National Technology Transfer and Advancement Act
O&M operation and maintenance
OEHHA (California EPA) Office of Environmental Health Hazard Assessment
OMB Office of Management and Budget
PM particulate matter
ppmv parts per million by volume
REL reference exposure level
RFA Regulatory Flexibility Act
RfC reference concentration
RfD reference dose
RTR residual risk and technology review
SSM startup, shutdown, and malfunction
TOSHI target organ-specific hazard index
tpy tons per year
UF uncertainty factor
UMRA Unfunded Mandates Reform Act
VOHAP volatile organic hazardous air pollutant(s)

Background information. On October 9, 2019 (84 FR 54394), the EPA proposed decisions related to the major source Iron and Steel Foundries NESHAP based on our RTR and the area source Iron and Steel Foundries NESHAP based on our technology review. In this action, we are finalizing those decisions and other revisions to the rules. We summarize some of the more significant comments we timely received regarding the proposed rules and provide our responses in this preamble. A summary of all other public comments on the proposal and the EPA's responses to those comments is available in the *National Emission Standards for Hazardous Air Pollutants: Iron and Steel Foundries Major Source Residual Risk and Technology Review and Area Source Technology Review—Final Rule—Summary of Public Comments and Responses,* which is available in the docket (Docket ID No. EPA–HQ–OAR–2019–0373). A ''track changes'' version of the regulatory language that incorporates the changes in this action is available in the docket.

Organization of this document. The information in this preamble is organized as follows:

I. General Information
A. Does this action apply to me?
B. Where can I get a copy of this document and other related information?
C. Judicial Review and Administrative Reconsideration
II. Background
A. What is the statutory authority for this action?
B. What are the Iron and Steel Foundries source categories and how do the NESHAP regulate HAP emissions from the source categories?
C. What changes did we propose for the Iron and Steel Foundries source categories in our October 9, 2019, proposal?

III. What is included in these final rules?
A. What are the final rule amendments based on the risk review for the major source Iron and Steel Foundries source category?
B. What are the final rule amendments based on the technology review for the Iron and Steel Foundries source categories?
C. What are the final rule amendments addressing emissions during periods of SSM?
D. What other changes have been made to the NESHAP?
E. What are the effective and compliance dates of the standards?
IV. What is the rationale for our final decisions and amendments for the Iron and Steel Foundries source categories?
A. Residual Risk Review for the Major Source Iron and Steel Foundries Source Category
B. Technology Review for the Iron and Steel Foundries Source Categories
C. Removal of the SSM Exemptions
D. Electronic Reporting
E. Technical and Editorial Corrections
V. Summary of Cost, Environmental, and Economic Impacts and Additional Analyses Conducted
A. What are the affected sources?
B. What are the air quality impacts?
C. What are the cost impacts?
D. What are the economic impacts?
E. What are the benefits?
F. What analysis of environmental justice did we conduct?
G. What analysis of children's environmental health did we conduct?
VI. Statutory and Executive Order Reviews
A. Executive Orders 12866: Regulatory Planning and Review and Executive Order 13563: Improving Regulation and Regulatory Review
B. Executive Order 13771: Reducing Regulations and Controlling Regulatory Costs
C. Paperwork Reduction Act (PRA)
D. Regulatory Flexibility Act (RFA)
E. Unfunded Mandates Reform Act (UMRA)
F. Executive Order 13132: Federalism
G. Executive Order 13175: Consultation and Coordination With Indian Tribal Governments
H. Executive Order 13045: Protection of Children From Environmental Health Risks and Safety Risks
I. Executive Order 13211: Actions Concerning Regulations That Significantly Affect Energy Supply, Distribution, or Use
J. National Technology Transfer and Advancement Act (NTTAA)
K. Executive Order 12898: Federal Actions To Address Environmental Justice in Minority Populations and Low-Income Populations
L. Congressional Review Act (CRA)

I. General Information

A. Does this action apply to me?

Regulated entities. Categories and entities potentially regulated by this action are shown in Table 1 of this preamble.

TABLE 1—NESHAP AND INDUSTRIAL SOURCE CATEGORIES AFFECTED BY THIS FINAL ACTION

Source category	NESHAP	NAICS [1] code
Iron and Steel Foundries	40 CFR part 63, subpart EEEEE	331511
	40 CFR part 63, subpart ZZZZZ	331512
		331513

[1] North American Industry Classification System.

Table 1 of this preamble is not intended to be exhaustive, but rather to provide a guide for readers regarding entities likely to be affected by the final action for the source category listed. To determine whether your facility is affected, you should examine the applicability criteria in the appropriate NESHAP. If you have any questions regarding the applicability of any aspect of this NESHAP, please contact the appropriate person listed in the preceding **FOR FURTHER INFORMATION CONTACT** section of this preamble.

B. Where can I get a copy of this document and other related information?

In addition to being available in the docket, an electronic copy of this final action will also be available on the internet. Following signature by the EPA Administrator, the EPA will post a copy of this final action at: *https://www.epa.gov/stationary-sources-air-pollution/iron-and-steel-foundries-national-emissions-standards-hazardous-air* and *https://www.epa.gov/stationary-sources-air-pollution/iron-and-steel-foundries-national-emission-standards-hazardous-air.* Following publication in the **Federal Register**, the EPA will post the **Federal Register** version and key technical documents at this same website.

Additional information is available on the RTR website at *https://www.epa.gov/stationary-sources-air-pollution/risk-and-technology-review-national-emissions-standards-hazardous.* This information includes an overview of the RTR program and links to project websites for the RTR source categories.

C. Judicial Review and Administrative Reconsideration

Under Clean Air Act (CAA) section 307(b)(1), judicial review of this final action is available only by filing a petition for review in the United States Court of Appeals for the District of Columbia Circuit (the Court) by November 9, 2020. Under CAA section 307(b)(2), the requirements established by this final rule may not be challenged separately in any civil or criminal proceedings brought by the EPA to enforce the requirements.

Section 307(d)(7)(B) of the CAA further provides that only an objection to a rule or procedure which was raised with reasonable specificity during the period for public comment (including any public hearing) may be raised during judicial review. This section also provides a mechanism for the EPA to reconsider the rule if the person raising an objection can demonstrate to the Administrator that it was impracticable to raise such objection within the period for public comment or if the grounds for such objection arose after the period for public comment (but within the time specified for judicial review) and if such objection is of central relevance to the outcome of the rule. Any person seeking to make such a demonstration should submit a Petition for Reconsideration to the Office of the Administrator, U.S. EPA, Room 3000, WJC South Building, 1200 Pennsylvania Ave. NW, Washington, DC 20460, with a copy to both the person(s) listed in the preceding **FOR FURTHER INFORMATION CONTACT** section, and the Associate General Counsel for the Air and Radiation Law Office, Office of General Counsel (Mail Code 2344A), U.S. EPA, 1200 Pennsylvania Ave. NW, Washington, DC 20460.

II. Background

A. What is the statutory authority for this action?

Section 112 of the CAA establishes a two-stage regulatory process to address emissions of hazardous air pollutants (HAP) from stationary sources. In the first stage, we must identify categories of sources emitting one or more of the HAP listed in CAA section 112(b) and then promulgate technology-based NESHAP for those sources. ''Major

sources'' are those that emit, or have the potential to emit, any single HAP at a rate of 10 tons per year (tpy) or more, or 25 tpy or more of any combination of HAP. All other sources are ''area sources.'' For major sources, these standards are commonly referred to as maximum achievable control technology (MACT) standards and must reflect the maximum degree of emission reductions of HAP achievable (after considering cost, energy requirements, and non-air quality health and environmental impacts). In developing MACT standards, CAA section 112(d)(2) directs the EPA to consider the application of measures, processes, methods, systems, or techniques, including, but not limited to, those that reduce the volume of or eliminate HAP emissions through process changes, substitution of materials, or other modifications; enclose systems or processes to eliminate emissions; collect, capture, or treat HAP when released from a process, stack, storage, or fugitive emissions point; are design, equipment, work practice, or operational standards; or any combination of the above.

For these MACT standards, the statute specifies certain minimum stringency requirements, which are referred to as MACT floor requirements, and which may not be based on cost considerations. See CAA section 112(d)(3). For new sources, the MACT floor cannot be less stringent than the emission control achieved in practice by the best-controlled similar source. The MACT standards for existing sources can be less stringent than floors for new sources, but they cannot be less stringent than the average emission limitation achieved by the best-performing 12 percent of existing sources in the category or subcategory (or the best-performing five sources for categories or subcategories with fewer than 30 sources). In developing MACT standards, we must also consider control options that are more stringent than the floor under CAA section 112(d)(2). We may establish standards more stringent than the floor, based on the consideration of the cost of achieving the emissions reductions, any non-air quality health and environmental impacts, and energy requirements. For area sources, CAA section 112(d)(5) gives the EPA discretion to set standards based on generally available control technologies or management practices (GACT standards) in lieu of MACT standards.

In the second stage of the NESHAP regulatory process, the CAA requires the EPA to undertake two different analyses, which we refer to as the technology review and the residual risk review. Under the technology review, which is applicable to both MACT and GACT standards, we must review the technology-based standards and revise them ''as necessary (taking into account developments in practices, processes, and control technologies)'' no less frequently than every 8 years, pursuant to CAA section 112(d)(6). Under the residual risk review, which is limited to the MACT standards, we must evaluate the risk to public health remaining after application of the technology-based standards and revise the standards, if necessary, to provide an ample margin of safety to protect public health or to prevent, taking into consideration costs, energy, safety, and other relevant factors, an adverse environmental effect. The residual risk review is required within 8 years after promulgation of the technology-based MACT standards, pursuant to CAA section 112(f). In conducting the residual risk review, if the EPA determines that the current standards provide an ample margin of safety to protect public health, it is not necessary to revise the MACT standards pursuant to CAA section 112(f).[1] For more information on the statutory authority for this rule, see 84 FR 54394.

B. What are the Iron and Steel Foundries source categories and how do the NESHAP regulate HAP emissions from these source categories?

The EPA promulgated the MACT standards for major source iron and steel foundries on April 22, 2004 (69 FR 21906). The standards are codified at 40 CFR part 63, subpart EEEEE. The EPA promulgated GACT standards for area source iron and steel foundries on January 2, 2008, under 40 CFR part 63, subpart ZZZZZ (73 FR 252). Iron and steel foundries manufacture metal castings by melting iron and/or steel in a furnace, pouring the molten iron or steel into a mold of a desired shape, allowing the casting to cool (solidify) in the mold, removing the casting from the mold, and finishing (grinding and cleaning) the final cast product. There are approximately 45 major source iron and steel foundries in the United States and approximately 390 area source foundries.

The MACT standards for major source iron and steel foundries established the following: Particulate matter (PM) emission limits (as a surrogate for metal HAP) and alternative metal HAP emission limits for metal melting furnaces; triethylamine emission limits from phenolic urethane cold box mold and core making operations; and organic HAP emission limits for new and existing cupola melting furnaces and scrap preheaters and for new automated cooling and shakeout lines. The MACT standards also included work practice standards prohibiting methanol to be used as a specific component of furan (also known as furfuryl alcohol) warm box mold and core making lines and instituting scrap selection and inspection requirements to limit the amount of mercury, lead, chlorinated plastics, and free liquids present in the scrap fed to metal melting furnaces. For other ancillary sources at the foundry, such as casting finishing, the MACT standards include a building opacity limit.

The GACT standards for area source iron and steel foundries established PM emission limits (as a surrogate for metal HAP) and alternative metal HAP emission limits for metal melting furnaces at ''large'' foundries.[2] The GACT standards for metal melting furnaces at area source foundries are less stringent than the MACT standards for major source foundries and include an allowance to use emissions averaging. Small and large area source iron and steel foundries are required to operate according to scrap selection and inspection requirements to limit the amount of mercury, lead, chlorinated plastics, and free liquids present in the scrap fed to metal melting furnaces and to operate furan warm box mold and core making lines without the use of methanol as a component of the catalyst formulation.

C. What changes did we propose for the Iron and Steel Foundries source categories in our October 9, 2019, proposal?

On October 9, 2019, the EPA published a proposed rule in the **Federal Register** (84 FR 54394) for the Iron and Steel Foundries NESHAP for both major and area sources, 40 CFR part 63, subparts EEEEE and ZZZZZ, that took into consideration the RTR analyses for major sources and the technology review for area sources. In the proposed rule, we proposed that the health risks due to HAP emissions from major source iron and steel foundries

[1] The Court has affirmed this approach of implementing CAA section 112(f)(2)(A): *NRDC* v. *EPA,* 529 F.3d 1077, 1083 (D.C. Cir. 2008) (''If EPA determines that the existing technology-based standards provide an 'ample margin of safety,' then the Agency is free to readopt those standards during the residual risk rulemaking.'').

[2] Existing area source foundries with annual metal melt production exceeding 20,000 tons and new area source foundries with annual metal melt capacity exceeding 10,000 tons are defined as ''large'' foundries; area source foundries at or below these metal melt rates are defined as ''small'' foundries.

are acceptable and that the Iron and Steel Foundries major source NESHAP (40 CFR part 63, subpart EEEEE) provides an ample margin of safety to protect public health and that additional standards are not necessary to prevent an adverse environmental effect. We also proposed that no revisions to the Iron and Steel Foundries major source or area source NESHAP are necessary based on our technology review. We proposed revisions to the SSM provisions of both NESHAP in order to ensure that they are consistent with the Court decision in *Sierra Club* v. *EPA,* 551 F. 3d 1019 (D.C. Cir. 2008). We proposed revisions to the recordkeeping and reporting requirements of both NESHAP to require the use of electronic reporting of performance test reports and semiannual reports. We also proposed to correct a section reference error in the major source NESHAP (40 CFR part 63, subpart EEEEE) and to correct several section reference errors and make other minor editorial revisions to the area source NESHAP (40 CFR part 63, subpart ZZZZZ). For additional information regarding the proposed rule, see the October 9, 2019, proposal (84 FR 54394).

III. What is included in these final rules?

This action finalizes the EPA's determinations pursuant to the RTR provisions of CAA section 112 for the Iron and Steel Foundries major source category and the CAA technology review provisions for the Iron and Steel Foundries area source category. This action also finalizes other changes to the NESHAP, including proposed revisions to SSM requirements, electronic reporting requirements, and editorial corrections. This action also reflects several changes to the October 2019 proposal in consideration of comments received during the public comment period described in section IV of this preamble.

A. What are the final rule amendments based on the risk review for the major source Iron and Steel Foundries source category?

The EPA proposed no changes to Iron and Steel Foundries major source NESHAP based on the risk review conducted pursuant to CAA section 112(f). In this action, we are finalizing our proposed determination that risks from the Iron and Steel Foundries source category are acceptable, the standards provide an ample margin of safety to protect public health, and more stringent standards are not necessary to prevent an adverse environmental effect. The EPA received no new data or other information during the public comment period that causes us to change that proposed determination. Therefore, we are not making any revisions to the existing standards under CAA section 112(f), and we are readopting the existing standards. Further information regarding these decisions are provided in section IV of this preamble.

B. What are the final rule amendments based on the technology review for the Iron and Steel Foundries source categories?

We determined that there are no developments in practices, processes, and control technologies that necessitate revisions to the MACT or GACT standards for these source categories. Therefore, we are not finalizing revisions to the MACT or GACT standards under CAA section 112(d)(6). The analyses and rationale for these decisions are described in section IV of this preamble.

C. What are the final rule amendments addressing emissions during periods of SSM?

We are finalizing amendments to the major source and area source Iron and Steel Foundries NESHAP to remove and revise provisions related to SSM consistent with what we proposed (84 FR 54415) except for the volatile organic HAP (VOHAP) standards during startup and shutdown for cupola melting furnaces at major source iron and steel foundries.[3] With regard to cupola furnaces VOHAP standards, we are removing the SSM exemptions consistent with what we proposed, however, with regard to the VOHAP emissions standards, we are finalizing work practice standards for VOHAP emissions for periods of startup and shutdown based on consideration of public comments instead of applying numeric emissions limits during these periods, as described in more detail below.

In its 2008 decision in *Sierra Club* v. *EPA,* 551 F.3d 1019 (D.C. Cir. 2008), the Court vacated portions of two provisions in the EPA's CAA section 112 regulations governing the emissions of HAP during periods of SSM. Specifically, the Court vacated the SSM exemption contained in 40 CFR 63.6(f)(1) and (h)(1), holding that under section 302(k) of the CAA, emissions standards or limitations must be continuous in nature and that the SSM exemption violates the CAA's requirement that some CAA section 112 standards apply continuously. As explained in section IV.D.1 of the October 2019 proposal preamble (84 FR 54415, October 9, 2019), the EPA proposed that the Iron and Steel Foundries NESHAP would require that the standards apply at all times, consistent with the Court decision in *Sierra Club* v. *EPA,* 551 F. 3d 1019 (D.C. Cir. 2008). Except for cupola melting furnace VOHAP emission limits, the EPA is finalizing the SSM provisions as proposed without setting a separate standard for startup and shutdown as discussed in the October 2019 proposal (84 FR 54415).

For VOHAP emissions from cupola melting furnaces, the EPA is finalizing separate standards during periods of cupola startup and shutdown to address public comments received on the proposed rule. Specifically, the EPA is finalizing amendments to the 20 ppmv VOHAP emission limit to apply only during normal production operations (*e.g.,* when furnace is actively producing molten metal), or more specifically, what the major source NESHAP refers to as ''on blast'' conditions as defined in the rule. With regard to cupola furnace startup and shutdown periods, which are considered part of the ''off blast'' conditions in the major source NESHAP, the EPA is finalizing work practice standards that require compliance with the building opacity limit during initial cupola startup procedures (*e.g.,* refractory curing, cupola bed preparation, and beginning stage of cupola coke bed preparation) and final shutdown procedures (*e.g.,* cooling and cupola banking or bottom drop). For other startup, shutdown, and idling periods, the EPA is finalizing work practice standards requiring that owners/operators (1) begin operating the cupola afterburner or other thermal combustion device as soon as practicable after beginning the coke bed preparatory step but no later than 30 minutes after the blast air is started to begin the coke bed burn-in and (2) operate the afterburner or other thermal combustion device with a flame present at all times during other off blast periods. Furthermore, we are requiring facilities to operate according to procedures to minimize emissions and ensure safety during all of these periods as specified in the operation and maintenance (O&M) plan. We are finalizing new definitions of ''cupola startup'' and ''cupola shutdown'' to

[3] The 20 parts per million by volume (ppmv) VOHAP emission limit for cupola melting furnaces applies only to major source iron and steel foundries (40 CFR part 63, subpart EEEEE). The area source NESHAP only regulates metal HAP emissions from melting furnaces so the SSM revisions for 40 CFR part 63, subpart ZZZZZ, are being finalized as proposed without exception.

clarify when these work practice standards apply and adding recordkeeping requirements for facilities to demonstrate compliance with the new work practice standards. We also added monitoring and recordkeeping requirements for foundry owners or operators to demonstrate compliance with the new work practice standards. More detail regarding these revisions from the proposal are provided in section IV.C of this preamble.

Further, the EPA is not finalizing separate standards for malfunctions. We are finalizing provisions in the final rule consistent with our proposal with regard to malfunctions (see 84 FR 54415). As discussed in the October 2019 proposal preamble, the EPA interprets CAA section 112 as not requiring emissions that occur during periods of malfunction to be factored into development of CAA section 112 standards, although the EPA has the discretion to set standards for malfunctions where feasible. For this action, it is unlikely that a malfunction would result in a violation of the standards, and no comments were submitted that would suggest otherwise. Refer to section IV.D.1 of the proposal preamble for further discussion of the EPA's rationale for the decision not to set separate standards for malfunctions, as well as a discussion of the actions a source could take in the unlikely event that a source fails to comply with the applicable CAA section 112(d) standards as a result of a malfunction event, given that administrative and judicial procedures for addressing exceedances of the standards fully recognize that violations may occur despite good faith efforts to comply and can accommodate those situations.

As is explained in more detail below, we are finalizing revisions to the General Provisions table to 40 CFR part 63, subparts EEEEE and ZZZZZ, to eliminate requirements that include rule language providing exemptions for periods of SSM. Additionally, we are finalizing our proposal to eliminate language related to SSM that treats periods of startup and shutdown the same as periods of malfunction, as explained further below. Finally, we are finalizing our proposal to revise the Deviation Notification Report and related records as they relate to malfunctions, as described below. As discussed in the October 2019 proposal preamble, these revisions are consistent with the requirement that the standards apply at all times. Refer to sections III.D.1 through 5 of the October 2019 proposal preamble for a detailed discussion of these amendments (see 84 FR 54415).

D. What other changes have been made to the NESHAP?

The EPA is requiring owners or operators of iron and steel foundries to submit electronic copies of certain required performance test reports, performance evaluation reports, and semiannual reports through the EPA's Central Data Exchange using the Compliance and Emissions Data Reporting Interface (CEDRI). The final rule requires that performance test results and performance evaluation results be submitted using the Electronic Reporting Tool. For semiannual reports, the final rule requires that owners or operators use the appropriate spreadsheet template to submit information to CEDRI. The final version of the templates for these reports are located on the CEDRI website.[4]

The electronic submittal of the reports addressed in this rulemaking will increase the usefulness of the data contained in those reports, is in keeping with current trends in data availability and transparency, will further assist in the protection of public health and the environment, will improve compliance by facilitating the ability of regulated facilities to demonstrate compliance with requirements and by facilitating the ability of delegated state, local, tribal, and territorial air agencies and the EPA to assess and determine compliance, and will ultimately reduce burden on regulated facilities, delegated air agencies, and the EPA. Electronic reporting also eliminates paper-based, manual processes, thereby saving time and resources, simplifying data entry, eliminating redundancies, minimizing data reporting errors, and providing data quickly and accurately to the affected facilities, air agencies, the EPA and the public. For a more thorough discussion of electronic reporting, see the memorandum, *Electronic Reporting Requirements for New Source Performance Standards (NSPS) and National Emission Standards for Hazardous Air Pollutants (NESHAP) Rules,* available in Docket ID No. EPA–HQ–OAR–2019–0373.

E. What are the effective and compliance dates of the standards?

We proposed that all of the SSM revisions would become effective upon promulgation. The SSM revisions to the area source NESHAP being promulgated in this action are effective on September 10, 2020, as proposed. The SSM revisions to the General Provisions table in major source NESHAP (Table 1 to subpart EEEEE of part 63) being promulgated in this action are also effective on September 10, 2020, as proposed. However, as previously noted in section III.C of this preamble, we are finalizing new work practice standards specific to cupola startup and shutdown. Therefore, we are providing 180 days for facilities to transition to these new requirements and retaining specific provisions within the major source NESHAP at 40 CFR 63.7720 regarding SSM for this 180-day transition period. As proposed, we are also providing 180 days for facilities to transition to the electronic reporting requirements. As such, revisions for selected SSM provisions and for the electronic reporting requirements being promulgated in this action are effective on March 9, 2021.

IV. What is the rationale for our final decisions and amendments for the Iron and Steel Foundries source categories?

For each issue, this section provides a description of what we proposed and what we are finalizing for the issue, the EPA's rationale for the final decisions and amendments, and a summary of key comments and responses. For all comments not discussed in this preamble, comment summaries and the EPA's responses can be found in the comment summary and response document titled *National Emission Standards for Hazardous Air Pollutants: Iron and Steel Foundries Major Source Residual Risk and Technology Review and Area Source Technology Review—Final Rule—Summary of Public Comments and Responses,* which is available in the docket (Docket ID No. EPA–HQ–OAR–2019–0373).

A. Residual Risk Review for the Major Source Iron and Steel Foundries Source Category

1. What did we propose pursuant to CAA section 112(f) for the major source Iron and Steel Foundries source category?

We proposed that the health risks due to emissions of HAP from the major source Iron and Steel Foundries source category are acceptable and that the NESHAP provides an ample margin of safety to protect public health and that no additional standards are necessary to prevent an adverse environmental effect.

Table 2 of this preamble provides a summary of the results of the inhalation risk assessment for the source category. More detailed information on the risk assessment can be found in the *Residual Risk Assessment for the Iron and Steel Foundries Major Source Category in*

[4] *https://www.epa.gov/electronic-reporting-air-emissions/cedri.*

Support of the 2020 Risk and Technology Review Final Rule document, available in the docket for this action.

TABLE 2—IRON AND STEEL FOUNDRIES SOURCE CATEGORY INHALATION RISK ASSESSMENT RESULTS

Number of facilities [1]	Maximum individual cancer risk (in 1 million) [2]		Population at increased risk of cancer ≥ 1-in-1 million		Annual cancer incidence (cases per year)		Maximum chronic noncancer TOSHI [3]		Maximum screening acute noncancer HQ [4]
	Based on . . .		Based on . . .		Based on . . .		Based on . . .		
	Actual emissions level	Allowable emissions level	Actual emissions level	Allowable emissions level	Actual emissions level	Allowable emissions level	Actual emissions level	Allowable emissions level	Based on actual emissions level
46	50	50	144,000	144,000	0.02	0.02	0.5 (spleen)	0.5 (spleen)	HQ_{REL} = 1 (arsenic).

[1] Number of facilities evaluated in the risk analysis.
[2] Maximum individual excess lifetime cancer risk due to HAP emissions from the source category.
[3] Maximum target organ-specific hazard index (TOSHI). The target organ system with the highest TOSHI for the source category is respiratory. The respiratory TOSHI was calculated using the California EPA (CalEPA) chronic reference exposure level (REL) for acrolein.
[4] The maximum estimated acute exposure concentration was divided by available short-term dose-response values to develop an array of hazard quotient (HQ) values. HQ values shown use the lowest available acute dose-response value, which in most cases is the REL. When an HQ exceeds 1, we also show the HQ using the next lowest available acute dose-response value.

As shown in Table 2, for the major source Iron and Steel Foundries source category, the maximum cancer risk to the individual most exposed is 50-in-1 million due to actual emissions or allowable emissions. This risk is less than 100-in-1 million, which is the presumptive upper limit of acceptable risk. The estimated incidence of cancer due to inhalation exposures for the source category is 0.02 excess cancer cases per year, or one excess case every 50 years. We estimated that approximately 144,000 people face an increased cancer risk greater than or equal to 1-in-1 million due to inhalation exposure to HAP emissions from this source category. The Agency estimated that the maximum chronic noncancer TOSHI from inhalation exposure, 0.5 (spleen), is less than 1. The screening assessment of worst-case acute inhalation impacts estimated a maximum acute HQ of 1 (due to arsenic) based on the REL.

With regard to multipathway human health risks, we estimated the maximum cancer risk for the highest exposed individual is 20-in-1 million (due to polycyclic organic matter (POM)) and the maximum noncancer chronic HQs are less than 1 for all the HAP known to be persistent and bio-accumulative in the environment (PB–HAP).

A screening-level evaluation of the potential adverse environmental risk associated with emissions of arsenic, cadmium, dioxins, hydrogen chloride, hydrogen flouride, lead, mercury, and POM indicated that no ecological benchmarks were exceeded. Considering all the health risk information and factors discussed above, the EPA proposed that the risks are acceptable and that no additional standards are necessary to prevent an adverse environmental effect.

Under the ample margin of safety analysis, we evaluated the cost and feasibility of available control technologies and other measures that could be applied to further reduce the risks (or potential risks) due to emissions of HAP from the source category. The main control we evaluated to reduce organic HAP emissions was carbon adsorption as a possible add-on control to further reduce VOHAP and associated risks from mold- and core-making and pouring, cooling and shakeout lines at existing sources. The main control we evaluated to reduce metal HAP emissions was improved capture of fugitive PM emissions from scrap handling and melting furnaces and routing them to fabric filter control devices.

We estimated the cost of the additional controls to reduce organic HAP emissions would be $12,700 per ton of organic HAP reduced or greater and would require a capital investment exceeding $27 million. With regard to risk reductions, we estimated the maximum individual risk (MIR) would be reduced from 50-in-1 million to 30-in-1 million, and the number of people with risks ≥ 1-in-1 million would also be reduced.

We estimated the cost of the improved capture and control to reduce metal HAP emissions would be almost $800,000 per ton metal HAP reduced and would require a capital investment of $23 million. With regard to risk reductions, we estimated the HAP metals contribution to the MIR would be reduced from 30-in-1 million to 3-in-1 million, and the number of people with risks ≥ 1-in-1 million would also be reduced.

Based on consideration of the costs and cost effectiveness of both the organic HAP and metal HAP emission control systems, consideration of potential impacts to small businesses, the moderate risk reductions that would be achieved, and the uncertainties in the emissions estimates, we proposed that the Iron and Steel Foundries major source NESHAP provides an ample margin of safety to protect public health, and we did not propose any changes to the NESHAP based on the risk review. For more details regarding the risk review, including the ample margin of safety analysis, see the proposal preamble (84 FR 54398).

2. How did the risk review change for the major source Iron and Steel Foundries source category?

The EPA has not made any changes to either the risk assessments or our determinations regarding risk acceptability, ample margin of safety, or adverse environmental effects for the major source Iron and Steel Foundries source category since the proposal was published on October 9, 2019. We are finalizing the risk review as proposed with no changes (84 FR 54394, October 9, 2019).

3. What key comments did we receive on the risk review, and what are our responses?

Comment: Several commenters agreed with the EPA's conclusion that risks from iron and steel foundry emissions are acceptable and that the current standards provide an ample margin of safety, but they suggested that the emissions data used by the EPA are outdated and flawed and that actual emissions are lower, which would result in even lower risk projections. They also stated that the costs of additional controls were significantly understated. According to the commenters, the higher cost coupled with lower emissions, which would also lower the estimated emission reductions, demonstrates that additional controls are not cost effective. On the other hand, one commenter opposed the risk conclusions stating that the EPA did not fully consider fugitive emissions.

Response: Regarding comments on the accuracy and completeness of the emissions and cost estimates, we used the best available emissions data in our risk assessment. We consider the emissions and release characteristics

used in the risk assessment to be reasonable and appropriate for the analysis conducted. It is clear that fugitive emission sources were included as several of these sources were driving the risk estimates for most facilities. We intentionally conducted a screening assessment of control measures using best-case (lowest cost) assumptions to determine whether, under ideal conditions, these controls might be cost effective. Based on the results of our screening analysis, we concluded that the controls were not warranted based on costs and that more detailed analyses of these control systems were not necessary (for more details see the preamble of the proposed rule, 84 FR 54412, October 9, 2019).

Comment: One commenter opposed the risk acceptability conclusion stating that the EPA significantly underestimated the risk because the EPA's Residual Risk Assessment failed to follow the best available science, including:

(1) Underestimating health threats to children and from early-life exposure by ignoring increased risk in childhood and from prenatal exposure;

(2) underestimating health threats to communities exposed to multiple sources by refusing to add factors to account for the increased risks caused by such exposure;

(3) underestimating health threats by refusing to assess health risks at all for pollutants such as lead and refusing to assess multipathway risks for additional emitted persistent bioaccumulative pollutants such as toxic metals like chromium (VI), nickel, beryllium, antimony, and manganese; and

(4) underestimating the cancer, chronic noncancer, and acute health risks by using modeling assumptions that ignore real-world exposures, underestimating risk from chemicals such as benzene, 1,3-butadiene, nickel, manganese, and lead due to the EPA's refusal to follow the best available science and ignoring the more protective health values created by CalEPA's Office of Environmental Health Hazard Assessment (OEHHA).

Response: The EPA disagrees with the commenter's claim that the risk assessment for this source category does not consider the groups that may be most at risk (*e.g.,* children and developing fetuses). When the EPA derives dose-response values for HAP, it considers the most sensitive populations identified in the available literature, and these are the values used in the Agency's risk assessments.[5] The EPA has an approach for selecting appropriate health benchmark values and, in general, this approach places greater weight on the EPA-derived health benchmarks than those from other agencies for the reasons explained in the document titled *Residual Risk Assessment for the Iron and Steel Foundries Major Source Category in Support of the 2020 Risk and Technology Review Final Rule,* available in the docket (Docket ID No. EPA–HQ–OAR–2019–0373). Additionally, the approach of favoring the EPA benchmarks (when they exist) has been endorsed by the Science Advisory Board (SAB) and ensures the use of values most consistent with well-established and scientifically-based EPA science policy. The EPA continually evaluates other benchmarks, including CalEPA OEHHA child-specific reference doses (RfDs) and more recent inhalation RELs[6] in the context of assessing risk from exposure to HAP.

With respect to cancer, the EPA uses an age-dependent adjustment factor approach referred to by the commenter but limits the application of age-dependent adjustment factors to carcinogenic pollutants that are known to act via mutagenic mode of action (MOA); in contrast, the CalEPA OEHHA approach is to apply adjustment factors across the board for all carcinogens, regardless of MOA. In lieu of chemical-specific data on which age or life-stage specific risk estimates or potencies can be determined, default age-dependent adjustment factors can be applied when assessing cancer risk for early-life exposures to chemicals that cause cancer through a mutagenic MOA. With regard to other carcinogenic pollutants (*e.g.,* non-mutagenic) for which early-life susceptibility data are lacking, it is the Agency's long-standing science policy position that use of the linear low-dose extrapolation approach (without further adjustment) provides adequate public health conservatism in the absence of chemical-specific data indicating differential early-life susceptibility or when the MOA is not mutagenicity.[7] The basis for this methodology is provided in the EPA's 2005 *Supplemental Guidance for Assessing Susceptibility from Early-Life Exposure to Carcinogens.*[8]

The EPA also disagrees with the commenter that a children's default safety factor of 10 or more should be added to the EPA's reference values in response to the 10X factor enacted by Congress in the Food Quality Protection Act (FQPA) in 1996.[9] [10] In response to the EPA noncancer reference value derivation, the Agency evaluated the methods for considering children's risk in the development of reference values. As part of the response, the EPA (*i.e.,* the Science Policy Council and Risk Assessment Forum) established the RfD/reference concentration (RfC) Technical Panel to develop a strategy for implementing the FQPA and examine the issues relative to protecting children's health and application of the 10X safety factor. One of the outcomes of the Technical Panel's efforts was an in-depth review of a number of issues related to the RfD/RfC process.[11] The most critical aspect in the derivation of a reference value pertaining to the FQPA has to do with variation between individual humans and is accounted for by a default UF when no chemical-specific data are available. The EPA reviewed the default UF for inter-human variability and found the EPA's default value of 10 adequate for all susceptible populations, including children and infants. The EPA also recommended the use of chemical-specific data in preference to default UFs when available[12] and has developed Agency guidance to facilitate consistency in the development and use of data-derived extrapolation factors for RfCs and RfDs.[13] Additionally, the EPA also

[5] U.S. EPA (2002). *A Review of the Reference Dose and Reference Concentration Processes.* U.S. Environmental Protection Agency, Risk Assessment Forum, Washington, DC. EPA/630/P–02/002F. Available online at *https://www.epa.gov/osa/review-reference-dose-and-reference-concentration-processes.*

[6] More recently published OEHHA RELs use a more protective set of inter-individual uncertainty factors (UFs), with a default of 30 as opposed to the EPA default of 10 with the intent of protecting for more susceptible individuals, most notably children.

[7] U.S. EPA (2002). *A Review of the Reference Dose and Reference Concentration Processes.* U.S. Environmental Protection Agency, Risk Assessment Forum, Washington, DC, EPA/630/P–02/002F. Available online at *https://www.epa.gov/osa/review-reference-dose-and-reference-concentration-processes.*

[8] U.S. EPA (2005). *Supplemental Guidance for Assessing Susceptibility from Early-Life Exposure to Carcinogens.* EPA/630/R–03/003F. Washington, DC. Available online at: *https://www3.epa.gov/airtoxics/childrens_supplement_final.pdf.*

[9] U.S. EPA, *Pesticide: Regulating Pesticides. The Food Quality Protection Act (FQPA).*

[10] Available at *https://www.epa.gov/laws-regulations/summary-food-quality-protection-act.*

[11] U.S. EPA (2002). *A Review of the Reference Dose and Reference Concentration Processes.* U.S. Environmental Protection Agency, Risk Assessment Forum, Washington, DC, EPA/630/P–02/002F. Available online at *https://www.epa.gov/osa/review-reference-dose-and-reference-concentration-processes.*

[12] U.S. EPA (1994). *Methods for derivation of inhalation reference concentrations and application of inhalation dosimetry.* (EPA/600/8–90/066F). Research Triangle Park, NC. *http://cfpub.epa.gov/ncea/cfm/recordisplay.cfm?deid=71993.*

[13] U.S. EPA (2014). *Guidance for Applying Quantitative Data to Develop Data-Derived Extrapolation Factors for Interspecies and*

applies a database UF, which is intended to account for the potential for deriving an under protective RfD/RfC as a result of an incomplete characterization of the chemical's toxicity. In addition to the identification of toxicity information that is lacking, review of existing data may also suggest that a lower reference value might result if additional data were available.

In conclusion, the estimated risks must also be considered in the context of the full set of assumptions used for this risk assessment. The EPA's dose-response values for HAP are considered plausible upper-bound estimates with an appropriate age-dependent adjustment factor. The EPA's chronic noncancer reference values have been derived considering the potential susceptibility of different subgroups, with specific consideration of children. An extra 10-fold UF is not needed in the RfC/RfD methodology because the currently applied factors are considered sufficient to account for uncertainties in the database from which the reference values are derived.

Regarding the commenter's assertion that the EPA has underestimated health threats to communities exposed to multiple sources, the EPA typically examines facility-wide risks to provide additional context to the source category risks. The development of facility-wide risk estimates provides additional information about the potential cumulative risks in the vicinity of the RTR sources, as one means of informing potential risk-based decisions about the RTR source category in question. Because these risk estimates were derived from facility-wide emissions estimates that have not generally been subjected to the same level of engineering review as the source category emission estimates, they may be less certain than the risk estimates for the source category in question, but they remain important for providing context as long as their uncertainty is taken into consideration in the process.

The EPA notes that section 112(f)(2) of the CAA expressly preserves the EPA's use of the two-step process for developing standards to address residual risk and interpret ''acceptable risk'' and ''ample margin of safety'' as developed in the Benzene NESHAP. In the Benzene NESHAP, the EPA rejected approaches that would have mandated consideration of background levels of pollution in assessing the acceptability of risk, concluding that ''With respect to considering other sources of risk from benzene exposure and determining the acceptable risk level for all exposures to benzene, the EPA considered this inappropriate because only the risk associated with the emissions under consideration are relevant to the regulation being established and, consequently, the decisions being made.'' (54 FR 38044, September 14, 1989). The EPA's authority to use the two-step process laid out in the Benzene NESHAP, and to consider a variety of measures of risk to public health, is discussed more thoroughly in the preamble to the proposed rule. Nothing in the CAA or the Benzene NESHAP in any way forecloses the EPA from considering facility-wide risks in making a determination under CAA section 112(f)(2), as such information can constitute relevant health information. Although not considered in the determination of acceptable risk, the EPA notes that background risks or contributions to risk from sources outside the source category under review could be one of the relevant factors considered in the ample margin of safety determination, along with cost and economic factors, technological feasibility, and other factors.

The EPA acknowledges it does not have screening values for some of the PB–HAP but the EPA disagrees that the multipathway assessment is inadequate. In the Air Toxics Assessment Library (available at: *https://www.epa.gov/fera/risk-assessment-and-modeling-air-toxics-risk-assessment-reference-library*), the EPA developed the current PB–HAP list considering all of the available information on persistence and bioaccumulation. This list reviewed HAP identified as PB–HAP by other EPA program offices (*e.g.,* the Great Waters Program). This list was peer-reviewed by the SAB and found to be acceptable and, therefore, the EPA considers it to be reasonable for use in the RTR program. Based on these sources and the limited available information on the persistence and bioaccumulation of other HAP, the EPA does not think that the potential for multipathway risk from other HAP rises to the level of the PB–HAP currently on the list.

The EPA disagrees that it has failed to assess potential risks from lead. As for other pollutants included in the assessment of noncancer hazard from inhalation, RTR assessments include lead in the calculation of TOSHIs. For lead, neurological and developmental TOSHIs are calculated. In these indices, modeled concentrations of lead are compared to the 2008 lead National Ambient Air Quality Standards (NAAQS) (which was reviewed and retained in 2016),[14] and other pollutant concentrations are compared to their respective noncancer reference values, then the individual pollutant HQs are summed to calculate the TOSHIs. To assess the potential for hazard from multipathway exposures, modeled air concentrations are compared to the lead NAAQS. The EPA notes that in developing the NAAQS for lead, air-related multipathway effects were already taken into account. That is, as noted at 73 FR 66971, ''As was true in the setting of the current standard, multimedia distribution of and multipathway exposure to Pb that has been emitted into the ambient air play a key role in the Agency's consideration of the Pb NAAQS.''

While recognizing that lead has been demonstrated to exert ''a broad array of deleterious effects on multiple organ systems,'' the lead NAAQS targets the effects associated with relatively lower exposures and associated blood lead levels, specifically nervous system effects in children including cognitive and neurobehavioral effects (73 FR 66976). The 2008 decision on the lead NAAQS was informed by an evidence-based framework for neurocognitive effects in young children. In applying the evidence-based framework, the EPA focused on a subpopulation of U.S. children, those living near air sources and more likely to be exposed at the level of the standard; to the same effect see 73 FR 67000/3—''The framework in effect focuses on the sensitive subpopulation that is the group of children living near sources and more likely to be exposed at the level of the standard. The evidence-based framework estimates a mean air-related IQ loss for this subpopulation of children; it does not estimate a mean for all U.S. children''; 73 FR 67005/1—''the air-related IQ loss framework provides estimates for the mean air-related IQ loss of a subset of the population of U.S. children, and there are uncertainties associated with those estimates. It provides estimates for that subset of children likely to be exposed to the level of the standard, which is generally expected to be the subpopulation of children living near sources who are likely to be most highly exposed.'' In addition, in reviewing and sustaining the lead primary NAAQS, the EPA notes that the Court specifically noted that the rule was targeted to protect children living near lead sources: ''EPA explained that the scientific evidence

Intraspecies Extrapolation. EPA/100/R–14/002F. *https://www.epa.gov/risk/guidance-applying-quantitative-data-develop-data-derived-extrapolation-factors-interspecies-and.*

[14] *https://www.epa.gov/lead-air-pollution/national-ambient-air-quality-standards-naaqs-lead-pb.*

showing the impact of lead exposure in young children in the United States led it 'to give greater prominence to children as the sensitive subpopulation in this review' and to focus its revision of the lead NAAQS on the 'sensitive subpopulation that is the group of children living near [lead emission] sources and more likely to be exposed at the level of the standard.' Given the scientific evidence on which it relied, the EPA's decision to base the revised lead NAAQS on protecting the subset of children likely to be exposed to airborne lead at the level of the standard was not arbitrary or capricious.'' *Coalition of Battery Recyclers,* 604 F. 3d at 618.

Regarding the comment that the EPA underestimates the cancer, chronic noncancer, and acute health risks by using modeling assumptions that ignore real-world exposures, underestimating risk from other chemicals such as benzene, 1,3-butadiene, nickel and manganese, due to the EPA's refusal to follow the best available science and ignoring the more protective health values created by CalEPA's OEHHA, the EPA uses dose-response information that has been obtained from various sources. As noted above, the dose-response information is prioritized according to (1) conceptual consistency with the EPA's risk assessment guidelines and (2) level of public and peer review received. The prioritization process is aimed at incorporating into RTR assessments the best available science with respect to dose-response information. Application of this approach generally results in the following priority order: (1) U.S. EPA IRIS, (2) Agency for Toxic Substances and Disease Registry (ATSDR), (3) CalEPA, and (4) other sources. Deviations from this prioritization only occur if there are concerns that the top priority values have become outdated or newer evidence suggests they are not protective; such was not the case for the values used in this RTR assessment. Based on this approach, the EPA determined that the best available science was used in the risk assessment, that the risks are acceptable, that the existing standards provide an ample margin of safety to protect public health, and that no changes are needed from the proposal based on this comment.

4. What is the rationale for our final approach and final decisions for the risk review?

As noted in our proposal, the EPA sets standards under CAA section 112(f)(2) using ''a two-step standard-setting approach, with an analytical first step to determine an 'acceptable risk' that considers all health information, including risk estimation uncertainty, and includes a presumptive limit on MIR of approximately 1-in-10 thousand'' (see 54 FR 38045, September 14, 1989). We weigh all health risk factors in our risk acceptability determination, including the cancer MIR, cancer incidence, the maximum chronic noncancer TOSHI, the maximum acute noncancer HQ, the extent of noncancer risks, the distribution of cancer and noncancer risks in the exposed population, and the risk estimation uncertainties.

In the second step of the approach, the EPA considers whether the emissions standards provide an ample margin of safety to protect public health ''in consideration of all health information, including the number of persons at risk levels higher than approximately 1-in-1 million, as well as other relevant factors, including costs and economic impacts, technological feasibility, and other factors relevant to each particular decision.'' *Id.* We evaluated additional control measures to reduce the number of persons exposed at risk levels higher than approximately 1-in-1 million and determined that these additional control measures were not reasonable considering the costs and economic impacts. Therefore, we concluded that the major source Iron and Steel Foundries NESHAP provides an ample margin of safety to protect public health without any revisions. After conducting the ample margin of safety analysis, we consider whether a more stringent standard is necessary to prevent, taking into consideration costs, energy, safety, and other relevant factors, an adverse environmental effect.

We evaluated all of the comments on the risk review and determined that no changes to the review are needed. For the reasons explained in the proposal, we determined that the risks from the major source Iron and Steel Foundries source category are acceptable, the current standards provide an ample margin of safety to protect public health, and more stringent standards are not necessary to prevent an adverse environmental effect. Therefore, pursuant to CAA section 112(f)(2), we are finalizing our residual risk review as proposed and readopting the standards for the major source Iron and Steel Foundries source category.

B. Technology Review for the Iron and Steel Foundries Source Categories

1. What did we propose pursuant to CAA section 112(d)(6) for the Iron and Steel Foundries source categories?

Pursuant to CAA section 112(d)(6), we proposed to conclude that no revisions to the current major source or area source NESHAP for Iron and Steel Foundries are necessary. Based on our technology review described in the October 9, 2019, proposal (84 FR 54414), we determined that there are no developments in practices, processes, or control technologies that necessitate revisions to the NESHAP for major source Iron and Steel Foundries (40 CFR part 63, subpart EEEEE) or the NESHAP for area source Iron and Steel Foundries (40 CFR part 63, subpart ZZZZZ).

2. How did the technology review change for the Iron and Steel Foundries source categories?

The EPA has not made any changes to the technology review since the proposal was published on October 9, 2019. We are finalizing the technology review as proposed with no changes.

3. What key comments did we receive on the technology reviews, and what are our responses?

Comment: Several commenters agreed with the EPA's proposed technology review conclusions. Other commenters suggested that the EPA needed to revise the standards because the EPA specifically considered the National Vehicle Mercury Switch Recovery Program (NVMSRP) to be a ''development'' with respect to the major source MACT standards. These commenters also suggested that the EPA should consider fugitive control measures required by Bay Area Air Quality Management District (''BAAQMD'') and South Coast Air Quality Management District (''SCAQMD'') standards and work practices considered in the EPA's proposed Integrated Iron and Steel Manufacturing RTR proposed rule (84 FR 42704, August 16, 2019) to be ''developments'' for major and area source foundries and take these into account in this rulemaking.

Response: As an initial matter, CAA section 112(d)(6) does not require the EPA to revise the standards if a ''development'' is identified, but to consider whether it is necessary to revise the standards in light of the developments. While we acknowledge that the NVMSRP was initiated after the major source rule (40 CFR part 63, subpart EEEEE) was promulgated, we note that the major source rule includes

requirements to remove mercury switches from automotive scrap consistent with the NVMSRP and that it acted as a catalyst for the development of the NVMSRP. Because the major source rule already requires mercury switch removal consistent with this ''development,'' no additional revisions to the major source rule were deemed ''necessary.'' With respect to additional fugitive emissions requirements, we specifically assessed adding improved capture and control requirements to reduce emissions of fugitive metal HAP emissions similar to those suggested by the commenter (see *Control Cost Estimates for Metal HAP Emissions from Iron and Steel Foundries,* which is available in the docket as Docket Item No. EPA–HQ–OAR–2019–0373–0015). We concluded that these control measures were not cost effective and that it was not necessary to revise the rule to reduce fugitive metal HAP emissions. Thus, we maintain our conclusion that it is not necessary to revise the standards based on the developments cited by the commenter.

4. What is the rationale for our final approach for the technology reviews?

We evaluated all of the comments on the technology reviews and determined that no changes to the reviews are needed. Therefore, pursuant to CAA section 112(d)(6), we are finalizing our technology reviews as proposed.

C. Removal of the SSM Exemptions

1. What did we propose?

The EPA proposed amendments to the major and area source Iron and Steel Foundries NESHAP to remove the provisions related to SSM in order to ensure that they are consistent with the Court decision in *Sierra Club* v. *EPA,* 551 F. 3d 1019 (D.C. Cir. 2008) that standards apply at all times. As detailed in the October 2019 proposal, we proposed the following amendments.

- Revising the General Provisions applicability tables (Table 1 to subpart EEEEE of part 63 and Table 3 to subpart ZZZZZ of part 63) to change the following entries from a ''yes'' in column 3 (indicating the provision applies) to a ''no'':
  - 40 CFR 63.6(e)
  - 40 CFR 63.6(f)(1)
  - 40 CFR 63.6(h)(1)
  - 40 CFR 63.7(e)(1)
  - 40 CFR 63.8(c)(1)(i) and (iii)
  - 40 CFR 63.8(d)(3)
  - 40 CFR 63.10(b)(2)(i), (ii), (iv), and (v)
  - 40 CFR 63.10(c)(7) [for subpart EEEEE]; 40 CFR 63.10(c) [for subpart ZZZZZ]
  - 40 CFR 63.10(d)(5)
  - 40 CFR 63.10(e)(3) [for subpart ZZZZZ; subpart EEEEE already indicates ''no'']
- Revising the following paragraphs in 40 CFR part 63, subpart EEEEE, to remove the language in the rule that exempted affected sources from compliance with the standards during periods of SSM, as well as references to General Provision sections or requirements that no longer apply.
  - 40 CFR 63.7710(a) to remove reference to 40 CFR 63.6(e)(1)(i)
  - 40 CFR 63.7720(a) to delete the phrase ''. . ., except during periods of startup, shutdown, or malfunction''
  - 40 CFR 63.7720(c) to delete and reserve the paragraph
  - 40 CFR 63.7746(b) to delete and reserve the paragraph
  - 40 CFR 63.7751(b)(4) and (c) to delete and reserve the paragraphs
  - 40 CFR 63.7752(a)(2) to remove reference to 40 CFR 63.6(e)(3) and require records require by 40 CFR 63.10(b)(2)(iii)
  - 40 CFR 63.7752(b)(4) to remove the records needed to indicate whether deviation of a continuous emission monitoring system occurred during periods of SSM
- Revising the following paragraphs in 40 CFR part 63, subpart ZZZZZ, to remove references to General Provision sections or requirements that no longer apply.
  - 40 CFR 63.10890(i) [re-designated to 40 CFR 63.10890(j)] to remove reference to 40 CFR 63.6(e)
  - 40 CFR 63.10897(g) to remove reference to minimizing periods of SSM
  - 40 CFR 63.10899(b) to revise the general reference to records required by 40 CFR 63.10 to specify that only records required by 40 CFR 63.10(b)(2)(iii), (vi) through (xiv), and (b)(3) are necessary
- Adding 40 CFR 63.7752(d) of subpart EEEEE and 40 CFR 63.10899(b)(15) of subpart ZZZZZ to specify recordkeeping requirements during a malfunction.
- Revising 40 CFR 63.7751(b)(7) and (8) of subpart EEEEE and 40 CFR 63.10899(c) of subpart ZZZZZ to specify reporting requirements for specific deviations.

We proposed that the effective date of these revisions be the date of promulgation of the final rule. More information concerning the elimination of SSM provisions is in the preamble to the proposed rule (84 FR 54415–44419, October 9, 2019).

2. What changed since proposal?

For the area source rule (40 CFR part 63, subpart ZZZZZ), we are finalizing the revisions to the SSM provisions as proposed with no changes. For the major source rule (40 CFR part 63, subpart EEEEE), we are finalizing most revisions regarding SSM provisions as proposed such that the emission limits apply at all times without the need for different standards during periods of startup and shutdown. However, for new and existing major source cupola melting furnaces, we are finalizing specific work practice standards for VOHAP emissions that apply during startup and shutdown. For cupola melting furnaces, we are finalizing that the 20 ppmv VOHAP emission limit in 40 CFR 63.7690(a)(8) applies only while the cupola is ''on blast'' (normal operations) and we are adding work practice standards at 40 CFR 63.7700(g) to limit VOHAP emissions during periods of off blast, which includes startup, shutdown, or idling. We are adding reference to these new work practice standards in 40 CFR 63.7710(b) so that the O&M plan specifically covers the capture and control systems used to comply with the new work practice standards. We are adding reference to these new work practice standards at 40 CFR 63.7740(e) and 63.7741(d) to require temperature monitoring to demonstrate that the afterburner or other thermal combustion device flame is present as required in 40 CFR 63.7700(g)(2)(i). We are also adding additional recordkeeping requirements at 40 CFR 63.7744(e) for facilities to demonstrate continuous compliance with the new work practice standards. These records include: Combustion zone temperature for the cupola's thermal combustion control device, the time blast air is started to begin the coke bed burn-in, the time the cupola afterburner or other thermal combustion device is lit, the time metal production starts during cupola startup, the time when metal production ends, the time slag removal was completed, the time the afterburner or other thermal combustion device is turned off during cupola shutdown, and the times idling starts and stops.

With regard to compliance dates, we are providing 180 days to comply with these new work practice standards for major source iron and steel foundries and also for the SSM related provisions in 40 CFR 63.7720 including provisions that state the emission limits apply at all times. We are retaining the rule-specific SSM provisions from the original NESHAP (including the requirement to have an SSM plan) for the first 180 days until the compliance date for the new work practice standards becomes effective. For other proposed SSM

revisions in the major source rule and for all of the proposed SSM revisions in that area source rule, which are predominately revisions to General Provisions applicability tables, we are finalizing requirements that foundry owners or operators will need to comply with these revisions on the date this final rule is published in the **Federal Register**.

3. What are the key comments and what are our responses?

Comments: Several commenters supported the proposed removal of the SSM exemptions. One commenter indicated that meeting the parametric monitoring requirement of 1,300 degrees Fahrenheit for afterburners that are used to control VOHAP emissions from cupola furnaces is likely to be an issue during cupola startup and shutdown and recommended new definitions of ''cupola startup'' and ''cupola shutdown,'' and revisions to the definition of ''off blast'' as follows:

Cupola Startup means the time beginning when molten metal is first tapped from a cupola that had previously been shut down.

Cupola Shutdown means the time ending once the last charge is added to the cupola preceding either cupola banking or cupola bottom drop.

Off Blast means those periods of cupola operation when the cupola is not actively being used to produce molten metal. Off blast conditions also include idling conditions when the blast air is turned off or down to the point that the cupola does not produce additional molten metal.

The same commenter recommended that the compliance date related to SSM-related rule changes be revised to 180 days after the date of the final rule for both subparts EEEEE and ZZZZZ of 40 CFR part 63 to allow facilities sufficient time to extract O&M plans that may be integrated with SSM plans as well as to develop other facility-specific procedures to address amended rule requirements related to SSM events.

Response: As discussed in the preamble to the October 2019 proposal (84 FR 54415, October 9, 2019), we acknowledged that the cupola afterburners would not be able to meet the 1,300 degrees Fahrenheit parametric monitoring temperature limit during off blast conditions, but we expected that the emissions would still be compliant with the 20 ppmv VOHAP emission limit. Therefore, initially, we did not understand why the new definitions would be helpful or necessary. So, we contacted the commenter to seek clarification of their comments. On February 12, 2020, we had a teleconference meeting with the commenter to try to better understand the issue. The notes of the meeting are in the docket for this rulemaking (Docket ID No. EPA–HQ–OAR–2019–0373). On March 9, 2020, the commenter provided a document providing further detail of the cupola startup and shutdown procedures and suggested work practices as an alternative to the suggested definitions (see email from Jeff Hannapel to Phil Mulrine dated March 9, 2020, included in Docket ID No. EPA–HQ–OAR–2019–0373). On April 2, 2020, we had an additional teleconference meeting with the commenter to discuss the information provided in the March 9, 2020, email. The notes of this meeting are also in the docket for this rulemaking (Docket ID No. EPA–HQ–OAR–2019–0373).

During the meetings, the commenter clarified that their main concern was the VOHAP emissions limit, not the temperature limit. They explained that there is uncertainty as to whether the cupola furnaces would meet the VOHAP limit during these periods and that no one has ever tested emissions during these periods. We also learned that the definitions suggested by the commenter were intended to remove preparatory steps from what was considered startup because of the uncertainty regarding whether they would be able to meet the VOHAP emissions limit during those periods. However, as some of these preparatory steps have the potential to emit VOHAP, we concluded that the suggested definitions were not consistent with the 2008 Court decision in *Sierra Club* v. *EPA,* 551 F. 3d 1019 (D.C. Cir. 2008).

Based on our improved understanding of the startup and shutdown procedures for the cupola furnace and related issues, we have determined that work practice standards are appropriate for these periods. As noted in CAA section 112(h)(1), ''if it is not feasible in the judgment of the Administrator to prescribe or enforce an emission standard for control of a hazardous air pollutant or pollutants, the Administrator may, in lieu thereof, promulgate a design, equipment, work practice, or operational standard, or combination thereof, which in the Administrator's judgment is consistent with the provisions of subsection (d) or (f).'' CAA section 112(h)(2) defines the phrase ''not feasible to prescribe or enforce an emission standard'' as any situation in which the Administrator determines that either ''a hazardous air pollutant or pollutants cannot be emitted through a conveyance designed and constructed to emit or capture such pollutant, or that any requirement for, or use of, such a conveyance would be inconsistent with any Federal, State or local law'' or ''the application of measurement methodology to a particular class of sources is not practicable due to technological and economic limitations.''

We have concluded that, during periods of cupola off blast, which includes startup, shutdown, and idling, it is not feasible to prescribe or enforce the numeric limits of the emission standard for VOHAP and that standards may be appropriately established under CAA section 112(h). The cupola furnace is essentially an open column during the initial cupola startup steps and during the final cupola shutdown steps, and the emissions are not emitted through a conveyance. Further, the initial procedures to prepare the cupola bed or remove the cupola from service cannot be safely completed with the cupola VOHAP control system operating. After further evaluation, we have determined the appropriate requirements for these steps (specifically refractory curing, cupola bed preparation, and the initial phases of cupola coke bed preparation during cupola startup and the final cooling stages and cupola banking or bottom drop during cupola shutdown) are the general duty requirements in 40 CFR 63.7710(a) to operate according to procedures to minimize emissions as contained in the O&M plan and to comply with the opacity limit at 40 CFR 63.7690(a)(7). We are adding definitions of ''cupola startup'' and ''cupola shutdown'' to describe the various steps for cupola startup and cupola shutdown to clarify when the work practice standards apply. For other startup and shutdown procedures, the cupola tuyere covers are closed, and the capture and control system can be operated. We modified the definition of ''off blast'' to clearly specify that off blast includes shutdown procedures as well as startup procedures. Even though the capture system can be operated during portions of off blast periods, we determined that the application of reliable emissions measurement methodologies to this source during these off blast periods is not practicable due to technological limitations. First, the flow rates during periods of off blast are typically low and highly variable. Additionally, the off blast periods are short duration (*e.g.,* less than 3 hours), and the required duration of a performance test to evaluate compliance with the VOHAP emission limit is 3 hours. As such, we determined that work practice standards

are appropriate for VOHAP during off blast periods. We are requiring that owners/operators (1) begin operating the cupola afterburner or other thermal combustion device as soon as practicable after beginning the coke bed preparatory step but no later than 30 minutes after the blast air is started to begin the coke bed burn-in and (2) operate the afterburner or other thermal combustion device with a flame present at all times during other off blast periods. Maintaining the operation of the afterburner during off blast periods will ensure VOHAP emissions that come from the process are combusted. Based on our understanding of the current operations of these furnaces and practices applied in the industry, we believe these requirements reflect the procedures of the best performing sources.

With respect to the compliance dates related to SSM changes, we proposed that the proposed revisions would become effective immediately because we expected that facilities could comply immediately with the standards at all times and that no or limited revisions in procedures would be needed. Because we are finalizing specific work-practice standards that apply to VOHAP emissions during cupola startup and shutdown for major source iron and steel foundries, we expect that some facilities will need to revise their startup procedures and revise their O&M plans to comply with the new work practice standards. Consequently, as suggested by the commenter, we are providing 180 days for major source facilities to transition from their existing SSM plans to compliance with the emission limitations, including the new work practice standards, at all times. We consider 180 days to be the minimum time needed to complete the management of these changes, which includes evaluating the changes, forming a team to accomplish the changes, conducting safety assessments, updating associated plans and procedures, and providing training to implement the changes. We consider a period of 180 days to be the most expeditious compliance period practicable, and, thus, we are finalizing the requirement that existing affected sources be in compliance with all of the revised requirements in the major source NESHAP within 180 days of the effective date of this final rule. We are revising 40 CFR 63.7720(a) and (c), which require preparation and operation according to an SSM plan, to provide a 180-day compliance period with these specific SSM provisions in the major source NESHAP as foundry owners or operators transition to the new work practice standards for cupola VOHAP emissions. Additional time is not required for the areas source NESHAP SSM revisions that were proposed or other major source NESHAP SSM revisions (not referenced above) that were proposed because operational changes are not needed to implement these other revisions, which are primarily revisions to the General Provisions applicability tables. As such, we are finalizing that those requirements become effective upon the date of promulgation as proposed.

4. What is the rationale for our final approach for the SSM provisions?

We evaluated all comments on the EPA's proposed amendments to remove the SSM provisions. For the reasons explained in the proposed rule, we determined that the proposed removal of the SSM exemptions is required to be consistent with the 2008 Court decision that standards apply at all times. For the area source NESHAP, we are finalizing our approach for removing the SSM exemptions as proposed. For the major source NESHAP, we are finalizing our approach for removing the SSM exemptions as proposed, except for provisions related to cupola furnace VOHAP emission limits. More information concerning the non-cupola amendments that we are finalizing for SSM is in the preamble to the proposed rule (84 FR 54415–54419, October 9, 2019). For cupola furnaces at major source iron and steel foundries, as described above in section IV.C.3 of this preamble, we determined that work practice standards during startup and shutdown are appropriate for the VOHAP standards under the provision of CAA section 112(h). We added monitoring and recordkeeping requirements for foundry owners or operators to demonstrate compliance with the new work practice standards. The temperature monitoring requirement is the same as needed to demonstrate compliance during normal ''on blast'' conditions, so we expect the monitoring requirement will not increase burden appreciably. The recordkeeping requirements are new and specific to documenting relevant times of off blast so facilities can demonstrate compliance with the new work practice standards. Semiannual reporting of deviations is required in the major source NESAHP, so reporting of deviations from the new work practice standards is also required. We determined that these additional requirements were the minimum necessary to demonstrate compliance with the new work practice standards for VOHAP from cupola furnaces during periods of off blast.

For the reasons detailed in section IV.C.3 of this preamble, we are finalizing these new work practice standards in the major source NESHAP during cupola startup and shutdown and providing 180 days to comply with these new requirements. During this 180-day transition period, major source foundry owners or operators must operate according to their SSM plan and we are retaining these specific SSM provisions in the major source NESHAP at 40 CFR 63.7720(a) and (c) for the 180-day transition period. We determined 180 days to be the most expeditious compliance period practicable to implement operational changes. For affected sources that commence construction or reconstruction after the effective date of these amendments, they must be in compliance with all emission limitations, including the new work practice standards, upon startup because additional time is not needed for these sources.

D. Electronic Reporting

1. What did we propose?

We proposed amendments to the major and area source Iron and Steel Foundries NESHAP to require foundry owners or operators to submit electronic copies of initial notifications, notifications of compliance status, performance test reports, performance evaluation reports, and semiannual reports through the EPA's Central Data Exchange (CDX) using CEDRI. Additionally, we proposed two broad circumstances in which electronic reporting extensions may be provided at the discretion of the Administrator. The EPA proposed these extensions to protect owners or operators from noncompliance in cases where they are unable to successfully submit a report by the reporting deadline for reasons outside of their control, including CDX and CEDRI outages and *force majeure* events, such as acts of nature, war, or terrorism.

2. What changed since proposal?

We determined that no changes were necessary to the proposed requirements for foundry owners or operators to submit initial notifications, notifications of compliance status, performance test reports, performance evaluation reports, and semiannual reports electronically using CEDRI. Therefore, we are finalizing the electronic reporting provisions as proposed (84 FR 54419, October 9, 2019).

3. What are the key comments and what are our responses?

Comment: The EPA received one comment generally supporting the proposed amendment to require electronic reporting but asserting that the *force majeure* language should be removed. The commenter expressed concern that the *force majeure* provisions violate the requirement for standards to be continuous and that they would allow unreported exceedances to go unchecked indefinitely.

Response: Regarding the *force majeure* provisions, we disagree that the ability to request a reporting extension would create a mechanism that owners or operators could use to evade binding emissions standards or provide a mechanism where those emission standards do not apply at all times. Also, we note that there is no exception or exemption to reporting, only a method for requesting an extension of the reporting deadline. There is no predetermined timeframe for the length of extension that can be granted, as this is something best determined by the Administrator when reviewing the circumstances surrounding the request. Different circumstances may require a different length of extension for electronic reporting. For example, a tropical storm may delay electronic reporting for a day, but a category 5 hurricane event may delay electronic reporting much longer, especially if the facility has no power, and, as such, the owner or operator has no ability to access electronically stored data or to submit reports electronically. The Administrator will be the most knowledgeable on the events leading to the request for extension and will assess whether an extension is appropriate and, if so, determine a reasonable length. The Administrator may even request that the report be sent in hard copy until electronic reporting can be resumed. While no new fixed duration deadline is set, the regulation does require that the report be submitted electronically as soon as possible after the CEDRI outage is resolved or after the *force majeure* event occurs.

Comment: One commenter stated that electronic reporting through CEDRI should not be required for states delegated to administer/enforce the NESHAP, unless electronic reporting is specifically required by the state.

Response: Regarding having delegated states determine whether electronic reporting is required, we note that the delegation of authority to states does not relieve facilities of their obligation to report to the EPA per 40 CFR 63.13(a), which requires all requests, reports, applications, submittals, and other communications shall be submitted to the appropriate Regional office of the EPA. In the case of the electronic reporting, those obligations are met through the submission to CEDRI. We are retaining the requirement to report through CEDRI for all reporters, as proposed. To clarify that electronic submission when required by regulation meets the requirement of 40 CFR 63.13(a), Table 1 of subpart EEEEE and Table 3 of ZZZZZ have been amended to specify in the explanation column that ''Except: reports and notifications required to be submitted to CEDRI meet this obligation through electronic reporting.''

4. What is the rationale for our final approach to electronic reporting?

We are finalizing as proposed a requirement in both the area source NESHAP and major source NESHAP that owners or operators of iron and steel foundries submit electronic copies of notifications, performance evaluation reports, and semiannual compliance reports using CEDRI. We also are finalizing, as proposed, provisions that allow facility owners or operators a process to request extensions for submitting electronic reports for circumstances beyond the control of the facility (*i.e.,* for a possible outage in the CDX or CEDRI or for a *force majeure* event). Based on public comments received, we are finalizing an additional revision to the General Provision tables (Table 1 to subpart EEEEE and Table 3 to subpart ZZZZZ) to add a specific entry for 40 CFR 63.13(a), and clarifying in the explanation column that electronic submissions to CEDRI meet the reporting requirement at 40 CFR 63.13(a). These amendments will increase the ease and efficiency of data submittal for owners and operators of iron and steel foundries and will make the data more accessible to regulators and the public.

E. Technical and Editorial Corrections

1. What did we propose?

We proposed one editorial correction for 40 CFR part 63, subpart EEEEE, to revise 40 CFR 63.7732(e)(1) to correct the reference to ''paragraphs (b)(1)(i) through (v)'' to be ''paragraphs (e)(1)(i) through (v).''

We proposed several technical and editorial corrections for 40 CFR part 63, subpart ZZZZZ as follows.

- To match requirements in 40 CFR part 63, subpart EEEEE, revise 40 CFR 63.10885(a)(1) to add the sentence: ''Any post-consumer engine blocks, post-consumer oil filters, or oily turnings that are processed and/or cleaned to the extent practicable such that the materials do not include lead components, mercury switches, chlorinated plastics, or free organic liquids can be included in this certification.''
- Revise 40 CFR 63.10890(c) to correct the reference to ''§ 63.9(h)(1)(i)'' to be ''§ 63.9(h)(2)(i).''
- Revise 40 CFR 63.10890(f) to correct the reference to ''§ 63.10(e)'' to be ''§ 63.13.''
- Revise 40 CFR 63.10897(d)(3) and (g) to replace all instances of ''correction action'' with ''corrective action'' to correct typographical errors.
- Revise 40 CFR 63.10899(c) to correct the reference to ''§ 63.10(e)'' to be ''§ 63.13.''
- To match requirements in 40 CFR part 63, subpart EEEEE, revise the entry for 40 CFR 63.9 in Table 3 to subpart ZZZZZ to add an explanation in column 4 to read ''Except for opacity performance tests.''

2. What changed since proposal?

We determined that no changes were necessary to the proposed technical and editorial corrections outlined above. Therefore, we are finalizing these technical and editorial corrections with no changes (84 FR 54420, October 9, 2019). We did receive notification of a typographical error in 40 CFR 63.10897(d)(1)(i) of subpart ZZZZZ, which specifies detection limits for bag leak detectors. The detectors must be capable of detecting emissions of PM at concentrations of 10 milligrams per actual cubic meter. This requirement includes a parenthetical providing the limit in units of grains per actual cubic feet. Unfortunately, in the area source rule, the limit in units of grains per actual cubic feet included a typographical error, listing it as 0.00044 rather than 0.0044 grains per actual cubic feet. The correct unit conversion for 10 milligrams per actual cubic meter is 0.0044 grains per actual cubic feet. The correct value is included in the major source rule at 40 CFR 63.7741(b)(1). Based on the identification of this additional typographical error, we are finalizing revision of 40 CFR 63.10897(d)(1)(i) to revise the parenthetical from ''(0.00044 grains per actual cubic foot)'' to ''(0.0044 grains per actual cubic foot).''

3. What are the key comments and what are our responses?

The EPA did not receive any comments on the proposed technical and editorial corrections.

4. What is the rationale for our final approach to technical and editorial corrections?

We identified necessary technical and editorial corrections and received no comments except for the identification of a typographical error (discussed above) at 40 CFR 63.10897(d)(1)(i) in subpart ZZZZZ. Therefore, we are finalizing the revisions, including correction of the typographical error in order to correct and clarify the requirements in the rules.

V. Summary of Cost, Environmental, and Economic Impacts and Additional Analyses Conducted

A. What are the affected sources?

There are approximately 45 major source iron and steel foundries subject to 40 CFR part 63, subpart EEEEE, and approximately 390 area source iron and steel foundries subject to 40 CFR part 63, subpart ZZZZZ.

B. What are the air quality impacts?

Because we are not revising the emission limitations for iron and steel foundries other than the new work practice standards for VOHAP for major sources during startup and shutdown for cupola melting furnaces, we do not anticipate any quantifiable air quality impacts as a result of the final amendments. However, since the final amendments include the removal of the SSM exemptions for both major and area sources and the addition of new work practice standards for cupola startup and shutdown for major sources, this final rule may reduce emissions by an unquantified amount by ensuring proper operation of control devices and other measures during SSM periods.

C. What are the cost impacts?

We expect that the final amendments will have minimal cost impacts for iron and steel foundries. The final editorial corrections will have no cost impacts. The final revisions to use electronic reporting effectively replace existing requirements to mail in copies of the required reports and notifications. We expect that the electronic system will save some time and expense compared to printing and mailing the required reports and notifications; however, it will take some time for foundry owners or operators to review the new electronic notification and reporting form, review their recordkeeping processes, and potentially revise their processes to more efficiently complete their semiannual reports. There may also be initial costs associated with electronic reporting of performance tests. We are also finalizing revisions to SSM provisions. Again, these revisions are expected to have minimal impact on affected iron and steel foundries. For major source iron and steel foundries, we are eliminating the need to develop a SSM plan or submit an immediate SSM report when the SSM plan is not followed and there is an exceedance of an applicable emission limitation. While this may reduce some burden, iron and steel foundry owners or operators will still need to assess their operations and make plans to achieve the emission limitations at all times, including periods of startup, shutdown, or malfunction. Additionally, we are adding new recordkeeping requirements for major source foundries related to cupola off blast periods, which includes cupola startup, shutdown, and idling periods to demonstrate compliance with the new work practice standards.

For the 45 major source iron and steel foundries subject to 40 CFR part 63, subpart EEEEE, we estimate the first-year costs associated with the final electronic reporting and SSM revisions will be $107,000 or approximately $2,380 per major source foundry. This includes one-time costs to learn the electronic reporting templates and set up recordkeeping systems to work with the electronic reporting, one-time costs for facilities that conducted a source test to learn the electronic reporting system for submitting performance tests, and costs associated with the new recordkeeping requirements for the work practice standards to reduce cupola VOHAP emissions while off blast. As performance tests are required every 5 years, we expect facilities will continue to incur additional costs for reporting performance test results, since facilities reporting performance test results in Year 2, 3, 4, or 5 would be using that system for the first time. For Years 2 and on, owners or operators of major source foundries will incur annual costs associated with recordkeeping requirements for the work practice standards to reduce cupola VOHAP emissions while off blast, but they will also realize some cost savings for semiannual reporting due to efficiencies achieved once they adapt to the new electronic reporting system. We estimate the nationwide annual costs for Years 2 through 5 would be approximately $32,500 per year or $720 per year per major source foundry.

For the 390 area source foundries subject to 40 CFR part 63, subpart ZZZZZ, we estimate the total first year costs associated with the final electronic reporting and SSM revisions will be $352,000 or approximately $900 per area source foundry. This includes one-time costs to learn the electronic reporting templates and set up recordkeeping systems to work with the electronic reporting and, for large area source foundries only, one-time costs to learn the electronic reporting system for submitting performance tests for those facilities that conducted a performance test. Because performance tests are required every 5 years, we expect a portion of the large area source foundries will continue to incur additional costs for reporting performance test results, since facilities reporting performance test results in Year 2, 3, 4, or 5 would be using that system for the first time. For Years 2 and on, all area source foundries will also realize some cost savings for semiannual reporting due to efficiencies achieved once facilities adapt to the new electronic reporting system. We estimate that all area source will realize a net cost savings for Years 2 and on and that the cumulative saving across all area source foundries would be $67,400 per year or a savings of $170 per year per area source foundry.

D. What are the economic impacts?

Economic impact analyses focus on changes in market prices and output levels. If changes in market prices and output levels in the primary markets are significant enough, impacts on other markets may also be examined. Both the magnitude of costs needed to comply with a final rule and the distribution of these costs among affected facilities can have a role in determining how the market will change in response to a final rule. Because the costs associated with the final revisions are minimal, no significant economic impacts are anticipated as a result of the final amendments.

E. What are the benefits?

The final amendments will result in improvements to the rule. Specifically, the final amendments revise the standards to reflect that they apply at all times. Additionally, the final amendments requiring electronic submittal of initial notifications, performance test results, and semiannual reports will increase the usefulness of the data, are in keeping with current trends of data availability, will further assist in the protection of public health and the environment, and will ultimately result in less burden on the regulated community. The final technical and editorial corrections improve the clarity of the rule.

F. What analysis of environmental justice did we conduct?

Executive Order 12898 (59 FR 7629, February 16, 1994) establishes Federal executive policy on environmental justice. Its main provision directs Federal agencies, to the greatest extent practicable and permitted by law, to make environmental justice part of their mission by identifying and addressing, as appropriate, disproportionately high and adverse human health or environmental effects of their programs, policies, and activities on minority populations and low-income populations in the United States.

To examine the potential for any environmental justice issues that might be associated with the source category, we performed a demographic analysis, which is an assessment of risks to individual demographic groups of the populations living within 5 kilometers (km) and within 50 km of the facilities. In the analysis, we evaluated the distribution of HAP-related cancer and noncancer risks from the major source Iron and Steel Foundries source category across different demographic groups within the populations living near facilities.[15]

The results of the major source Iron and Steel Foundries source category demographic analysis indicate that emissions from the source category expose approximately 144,000 people to a cancer risk at or above 1-in-1 million and zero people to a chronic noncancer hazard index greater than or equal to 1. The African American population exposed to a cancer risk at or above 1-in-1 million due to iron and steel foundries emissions is 4 percent above the national average. Likewise, populations living ''Below Poverty Level'' and ''Over 25 and without High School Diploma'' are exposed to cancer risk above 1-in-1 million, 6 and 4 percent above the national average, respectively. The percentages of the at-risk population in other demographic groups are similar to or lower than their respective nationwide percentages. The methodology and the results of the demographic analysis are presented in a technical report, *Risk and Technology Review—Analysis of Demographic Factors for Populations Living Near Iron and Steel Foundries,* available as Docket Item No. EPA–HQ–OAR–2019–0373–0020.

[15] Demographic groups included in the analysis are: White, African American, Native American, other races and multiracial, Hispanic or Latino, children 17 years of age and under, adults 18 to 64 years of age, adults 65 years of age and over, adults without a high school diploma, people living below the poverty level, people living 2 times the poverty level, and linguistically isolated people.

G. What analysis of children's environmental health did we conduct?

The EPA does not believe the environmental health or safety risks addressed by this action present a disproportionate risk to children. The health risk assessments for this action are contained the document titled *Residual Risk Assessment for the Iron and Steel Foundries Major Source Category in Support of the 2020 Risk and Technology Review Final Rule,* available in the docket (Docket ID No. EPA–HQ–OAR–2019–0373).

VI. Statutory and Executive Order Reviews

Additional information about these statutes and Executive Orders can be found at *https://www.epa.gov/laws-regulations/laws-and-executive-orders.*

A. Executive Orders 12866: Regulatory Planning and Review and Executive Order 13563: Improving Regulation and Regulatory Review

This action is not a significant regulatory action and was, therefore, not submitted to the Office of Management and Budget (OMB) for review.

B. Executive Order 13771: Reducing Regulations and Controlling Regulatory Costs

This action is not an Executive Order 13771 regulatory action because this action is not significant under Executive Order 12866.

C. Paperwork Reduction Act (PRA)

The information collection activities in this final rule have been submitted for approval to OMB under the PRA.

1. Iron and Steel Foundries Major Sources

The information collection request (ICR) document that the EPA prepared has been assigned EPA ICR number 2096.09. You can find a copy of the ICR in the docket for this rule, and it is briefly summarized here. The information collection requirements are not enforceable until OMB approves them.

We are finalizing amendments that require electronic reporting, remove the malfunction exemption, and impose other revisions that affect reporting and recordkeeping for iron and steel foundries major source facilities. This information will be collected to assure compliance with 40 CFR part 63, subpart EEEEE.

Respondents/affected entities: Owners or operators of iron and steel foundries major source facilities.

Respondent's obligation to respond: Mandatory (40 CFR part 63, subpart EEEEE).

Estimated number of respondents: 45 (total).

Frequency of response: Initial, semiannual, and annual.

Total estimated burden: The annual recordkeeping and reporting burden for facilities to comply with all of the requirements in the NESHAP is estimated to be 15,400 hours (per year). Burden is defined at 5 CFR 1320.3(b).

Total estimated cost: The annual recordkeeping and reporting burden for facilities to comply with all of the requirements in the NESHAP is estimated to be $1,440,000 (per year), which includes $206,000 annualized capital or O&M costs.

2. Iron and Steel Foundries Area Sources

The ICR document that the EPA prepared has been assigned EPA ICR number 2267.07. You can find a copy of the ICR in the docket for this rule, and it is briefly summarized here. The information collection requirements are not enforceable until OMB approves them.

We are finalizing amendments that require electronic reporting, remove the malfunction exemption, and impose other revisions that affect reporting and recordkeeping for iron and steel foundries area source facilities. This information will be collected to assure compliance with 40 CFR part 63, subpart ZZZZZ.

Respondents/affected entities: Owners or operators of iron and steel foundries area source facilities.

Respondent's obligation to respond: Mandatory (40 CFR part 63, subpart ZZZZZ).

Estimated number of respondents: 390 (total), 75 of these are classified as large iron and steel foundries and 315 are classified as small iron and steel foundries.

Frequency of response: Initial, semiannual, and annual.

Total estimated burden: The annual recordkeeping and reporting burden for facilities to comply with all of the requirements in the NESHAP is estimated to be 14,400 hours (per year). Burden is defined at 5 CFR 1320.3(b).

Total estimated cost: The annual recordkeeping and reporting burden for facilities to comply with all of the requirements in the NESHAP is estimated to be $1,150,000 (per year); there are no annualized capital or O&M costs.

An agency may not conduct or sponsor, and a person is not required to respond to, a collection of information

unless it displays a currently valid OMB control number. The OMB control numbers for the EPA's regulations in 40 CFR are listed in 40 CFR part 9. When OMB approves this ICR, the Agency will announce that approval in the **Federal Register** and publish a technical amendment to 40 CFR part 9 to display the OMB control number for the approved information collection activities contained in this final rule.

D. Regulatory Flexibility Act (RFA)

I certify that this action will not have a significant economic impact on a substantial number of small entities under the RFA. In making this determination, the impact of concern is any significant adverse economic impact on small entities. An agency may certify that a rule will not have a significant economic impact on a substantial number of small entities if the rule relieves regulatory burden, has no net burden or otherwise has a positive economic effect on the small entities subject to the rule. The final amendments have a very limited one-time burden as affected facilities implement electronic reporting for the first time, but affected facilities will see a net cost savings in subsequent years that will off-set the initial one-time costs within the first 3 years after implementation. We have, therefore, concluded that this action will have no net regulatory burden for all directly regulated small entities.

E. Unfunded Mandates Reform Act (UMRA)

This action does not contain an unfunded mandate of $100 million or more as described in UMRA, 2 U.S.C. 1531–1538, and does not significantly or uniquely affect small governments. While this action creates an enforceable duty on the private sector, the cost does not exceed $100 million or more.

F. Executive Order 13132: Federalism

This action does not have federalism implications. It will not have substantial direct effects on the states, on the relationship between the National Government and the states, or on the distribution of power and responsibilities among the various levels of government.

G. Executive Order 13175: Consultation and Coordination With Indian Tribal Governments

This action does not have tribal implications as specified in Executive Order 13175. It will not have substantial direct effects on tribal governments, on the relationship between the Federal Government and Indian Tribes, or on the distribution of power and responsibilities between the Federal Government and Indian Tribes. No tribal governments own facilities subject to the NESHAP. Thus, Executive Order 13175 does not apply to this action.

H. Executive Order 13045: Protection of Children From Environmental Health Risks and Safety Risks

This action is not subject to Executive Order 13045 because it is not economically significant as defined in Executive Order 12866, and because the EPA does not believe the environmental health or safety risks addressed by this action present a disproportionate risk to children. This action's health and risk assessments are contained in sections III.A and IV.A of this preamble. Further documentation is provided in the following risk report titled *Residual Risk Assessment for the Iron and Steel Foundries Major Source Category in Support of the 2020 Risk and Technology Review Final Rule,* which can be found in the docket for this action.

I. Executive Order 13211: Actions Concerning Regulations That Significantly Affect Energy Supply, Distribution, or Use

This action is not subject to Executive Order 13211 because it is not a significant regulatory action under Executive Order 12866.

J. National Technology Transfer and Advancement Act (NTTAA)

This rulemaking does not involve technical standards.

K. Executive Order 12898: Federal Actions To Address Environmental Justice in Minority Populations and Low-Income Populations

The EPA believes that this action does not have disproportionately high and adverse human health or environmental effects on minority populations, low income populations, and/or indigenous peoples, as specified in Executive Order 12898 (59 FR 7629, February 16, 1994). The documentation for this decision is contained in the technical report titled *Risk and Technology Review—Analysis of Demographic Factors for Populations Living Near Iron and Steel Foundries,* available as Docket Item No. EPA–HQ–OAR–2019–0373–0020.

L. Congressional Review Act (CRA)

This action is subject to the CRA, and the EPA will submit a rule report to each House of the Congress and to the Comptroller General of the United States. This action is not a ''major rule'' as defined by 5 U.S.C. 804(2).

List of Subjects in 40 CFR Part 63

Environmental protection, Administrative practice and procedures, Air pollution control, Hazardous substances, Incorporation by reference, Intergovernmental relations, Reporting and recordkeeping requirements.

Andrew Wheeler,

Administrator.

For the reasons set forth in the preamble, the EPA is amending 40 CFR part 63 as follows:

PART 63—NATIONAL EMISSION STANDARDS FOR HAZARDOUS AIR POLLUTANTS FOR SOURCE CATEGORIES

■ 1. The authority citation for part 63 continues to read as follows:

Authority: 42 U.S.C. 7401 *et seq.*

Subpart EEEEE—National Emission Standards for Hazardous Air Pollutants for Iron and Steel Foundries

■ 2. Section 63.7690 is amended by revising paragraph (a)(8) to read as follows:

§ 63.7690 What emissions limitations must I meet?

(a) * * *

(8) For each cupola metal melting furnace at a new or existing iron and steel foundry, you must not discharge emissions of volatile organic hazardous air pollutants (VOHAP) through a conveyance to the atmosphere that exceed 20 parts per million by volume (ppmv) corrected to 10-percent oxygen while on blast.

* * * * *

■ 3. Section 63.7700 is amended by adding paragraph (g) to read as follows:

§ 63.7700 What work practice standards must I meet?

* * * * *

(g) For each cupola at a new or existing iron and steel foundry, you must reduce VOHAP emissions to the extent practicable during periods of off blast, as defined in § 63.7765, by meeting the applicable requirements in paragraph (g)(1) or (2) of this section.

(1) On and before March 9, 2021, you must comply with the requirements in § 63.7710 and the requirements specified in the startup, shutdown, and malfunction plan required at § 63.7720(c).

(2) After March 9, 2021, you must comply with the applicable requirements in paragraphs (g)(2)(i) through (iii) of this section.

(i) Except as provided in paragraphs (g)(2)(ii) and (iii) of this section, you

must operate an afterburner or other thermal combustion control device with a flame present at all times while the cupola is off blast. This includes the latter portion of coke bed preparation step and the initial metallics charging step during cupola startup, the slag and residual metal removal step during cupola shutdown, and idling conditions when the blast air is turned off or down to the point that the cupola does not produce additional molten metal.

(ii) During cupola startup steps of refractory curing and cupola bed preparation and during the cupola shutdown steps of cupola cooling and banking or bottom drop, you must comply with the requirements in § 63.7710 and the opacity limit in § 63.7690(a)(7).

(iii) You must light the cupola afterburner or other thermal combustion control device as soon as practicable during the cupola startup step of coke bed preparation following the procedures included in the operation and maintenance plan required at § 63.7710(b), but no later than 30 minutes after the blast air is started to begin the coke bed burn-in.

■ 4. Section 63.7710 is amended by revising paragraphs (a) and (b) introductory text to read as follows:

§ 63.7710 What are my operation and maintenance requirements?

(a) You must always operate and maintain your iron and steel foundry, including air pollution control and monitoring equipment, in a manner consistent with good air pollution control practices for minimizing emissions at least to the levels required by this subpart.

(b) You must prepare and operate at all times according to a written operation and maintenance plan for each capture and collection system and control device for an emissions source subject to a PM, metal HAP, TEA, or VOHAP emissions limit in § 63.7690(a) or the work practice standards in § 63.7700(g). Your operation and maintenance plan also must include procedures for igniting gases from mold vents in pouring areas and pouring stations that use a sand mold system. This operation and maintenance plan is subject to approval by the Administrator. Each plan must contain the elements described in paragraphs (b)(1) through (6) of this section.

* * * * *

■ 5. Section 63.7720 is amended by revising paragraphs (a) and (c) to read as follows:

§ 63.7720 What are my general requirements for complying with this subpart?

(a) On and before March 9, 2021, for affected sources that commenced construction or reconstruction on or before September 10, 2020, you must be in compliance with the emissions limitations, work practice standards, and operation and maintenance requirements in this subpart at all times, except during periods of startup and shutdown. After March 9, 2021, for affected sources that commenced construction or reconstruction on or before September 10, 2020, and upon startup for affected sources that commenced construction or reconstruction after September 10, 2020, you must be in compliance with the emissions limitations, work practice standards, and operation and maintenance requirements in this subpart at all times.

* * * * *

(c) On and before March 9, 2021, for affected sources that commenced construction or reconstruction on or before March 9, 2021, you must develop a written startup, shutdown, and malfunction plan according to the provisions in § 63.6(e)(3). The startup, shutdown, and malfunction plan also must specify what constitutes a shutdown of a cupola and how to determine that operating conditions are normal following startup of a cupola. After March 9, 2021, for affected sources that commenced construction or reconstruction on or before September 10, 2020, and upon startup for affected sources that commenced construction or reconstruction after September 10, 2020, the startup, shutdown, and malfunction plan requirements no longer apply.

■ 6. Section 63.7732 is amended by revising paragraphs (a) and (e)(1) introductory text to read as follows:

§ 63.7732 What test methods and other procedures must I use to demonstrate initial compliance with the emissions limitations?

(a) You must conduct each performance test that applies to your iron and steel foundry based on your selected compliance alternative, if applicable, according to the requirements in paragraphs (b) through (i) of this section. Each performance test must be conducted under conditions representative of normal operations. Normal operating conditions exclude periods of startup and shutdown. You may not conduct performance tests during periods of malfunction. You must record the process information that is necessary to document operating conditions during the test and include in such record an explanation to support that such conditions represent normal operation. Upon request, you shall make available to the Administrator such records as may be necessary to determine the conditions of performance tests.

* * * * *

(e) * * *

(1) Determine the VOHAP concentration for each test run according to the test methods in 40 CFR part 60, appendix A, that are specified in paragraphs (e)(1)(i) through (v) of this section.

* * * * *

■ 7. Section 63.7740 is amended by revising paragraph (e) to read as follows:

§ 63.7740 What are my monitoring requirements?

* * * * *

(e) For each combustion device subject to the operating limit in § 63.7690(b)(3) or the work practice standard in § 63.7700(g)(2)(i), you must at all times monitor the 15-minute average combustion zone temperature using a CPMS according to the requirements of § 63.7741(d).

* * * * *

■ 8. Section 63.7741 is amended by revising paragraph (d) introductory text to read as follows:

§ 63.7741 What are the installation, operation, and maintenance requirements for my monitors?

* * * * *

(d) For each combustion device subject to the operating limit in § 63.7690(b)(3) or (4) or the work practice standard in § 63.7700(g)(2)(i), you must install and maintain a CPMS to measure and record the combustion zone temperature according to the requirements in paragraphs (d)(1) through (8) of this section.

* * * * *

■ 9. Section 63.7744 is amended by adding paragraph (e) to read as follows:

§ 63.7744 How do I demonstrate continuous compliance with the work practice standards that apply to me?

* * * * *

(e) For each cupola furnace at a new or existing iron and steel foundry in off blast, you must keep daily records to document the relevant times of off blast, in conjunction with the requirements to monitor and record the combustion zone temperature for the cupola's thermal combustion control device as required in §§ 63.7740(e) and 63.7741(d), to demonstrate continuous compliance with the requirements in § 63.7700(g). The relevant times of off

blast include: The time blast air is started to begin the coke bed burn-in, the time the cupola afterburner or other thermal combustion device is lit, and the time metal production starts during cupola startup; the time when metal production ends, the time slag removal is completed, and the time the afterburner or other thermal combustion device is turned off during cupola shutdown; and the times idling starts and stops.

§ 63.7746 [Amended]

■ 10. Section 63.7746 is amended by removing and reserving paragraph (b).

■ 11. Section 63.7751 is amended by:

■ a. In paragraph (a) introductory text, removing ''Compliance report due dates'' and adding ''*Compliance report due dates*'' in its place;

■ b. In paragraph (b) introductory text, removing ''Compliance report contents'' and adding ''*Compliance report contents*'' in its place;

■ c. Removing and reserving paragraph (b)(4);

■ d. Revising paragraphs (b)(6) through (8);

■ e. Removing and reserving paragraph (c);

■ f. In paragraph (d), removing ''Part 70 monitoring report'' and adding ''*Part 70 monitoring report*'' in its place; and

■ g. Adding paragraphs (e) through (i).

The revisions and additions read as follows:

§ 63.7751 What reports must I submit and when?

* * * * *

(b) * * *

(6) If there were no periods during which a continuous monitoring system (including a CPMS or CEMS) was inoperable or out-of-control as specified by § 63.8(c)(7), a statement that there were no periods during which the CPMS was inoperable or out-of-control during the reporting period.

(7) For each affected source or equipment for which there was a deviation from an emissions limitation (including an operating limit, work practice standard, or operation and maintenance requirement) that occurs at an iron and steel foundry during the reporting period, the compliance report must contain the information specified in paragraphs (b)(7)(i) through (iii) of this section. The requirement in this paragraph (b)(7) includes periods of startup, shutdown, and malfunction.

(i) A list of the affected source or equipment and the total operating time of each emissions source during the reporting period.

(ii) For each deviation from an emissions limitation (including an operating limit, work practice standard, or operation and maintenance requirement) that occurs at an iron and steel foundry during the reporting period, report:

(A) The date, start time, duration (in hours), and cause of each deviation (characterized as either startup, shutdown, control equipment problem, process problem, other known cause, or unknown cause, as applicable) and the corrective action taken; and

(B) An estimate of the quantity of each regulated pollutant emitted over any emission limit and a description of the method used to estimate the emissions.

(iii) A summary of the total duration (in hours) of the deviations that occurred during the reporting period by cause (characterized as startup, shutdown, control equipment problems, process problems, other known causes, and unknown causes) and the cumulative duration of deviations during the reporting period across all causes both in hours and as a percent of the total source operating time during the reporting period.

(8) For each continuous monitoring system (including a CPMS or CEMS) used to comply with the emissions limitation or work practice standard in this subpart that was inoperable or out-of-control during any portion of the reporting period, you must include the information specified in paragraphs (b)(8)(i) through (vi) of this section. The requirement in this paragraph (b)(8) includes periods of startup, shutdown, and malfunction.

(i) A brief description of the continuous monitoring system, including manufacturer and model number.

(ii) The date of the latest continuous monitoring system certification or audit.

(iii) A brief description and the total operating time of the affected source or equipment that is monitored by the continuous monitoring system during the reporting period.

(iv) A description of any changes in continuous monitoring systems, processes, or controls since the last reporting period.

(v) For each period for which the continuous monitoring system was inoperable or out-of-control during the reporting period, report:

(A) The date, start time, and duration (in hours) of the deviation;

(B) The type of deviation (inoperable or out-of-control); and

(C) The cause of deviation (characterized as monitoring system malfunctions, non-monitoring equipment malfunctions, quality assurance/quality control calibrations, other known causes, and unknown causes, as applicable) and the corrective action taken.

(vi) A summary of the total duration (in hours) of the deviations that occurred during the reporting period by cause (characterized as monitoring system malfunctions, non-monitoring equipment malfunctions, quality assurance/quality control calibrations, other known causes, and unknown causes) and the cumulative duration of deviations during the reporting period across all causes both in hours and as a percent of the total source operating time during the reporting period.

* * * * *

(e) *Compliance report submission requirements.* Prior to March 9, 2021, you must submit semiannual compliance reports to the Administrator as specified in § 63.13. Beginning on March 9, 2021, you must submit all subsequent semiannual compliance reports to the EPA via the Compliance and Emissions Data Reporting Interface (CEDRI), which can be accessed through the EPA's Central Data Exchange (CDX) (*https://cdx.epa.gov/*). The EPA will make all the information submitted through CEDRI available to the public without further notice to you. Do not use CEDRI to submit information you claim as confidential business information (CBI). Anything submitted using CEDRI cannot later be claimed to be CBI. You must use the appropriate electronic report template on the CEDRI website (*https://www.epa.gov/electronic-reporting-air-emissions/cedri*) for this subpart. The date report templates become available will be listed on the CEDRI website. The report must be submitted by the deadline specified in this subpart, regardless of the method in which the report is submitted. If you claim some of the information required to be submitted via CEDRI is CBI, submit a complete report, including information claimed to be CBI, to the EPA. The report must be generated using the appropriate form on the CEDRI website or an alternate electronic file consistent with the extensible markup language (XML) schema listed on the CEDRI website. Although we do not expect persons to assert a claim of CBI, if persons wish to assert a CBI, submit the file on a compact disc, flash drive, or other commonly used electronic storage medium and clearly mark the medium as CBI. Mail the electronic medium to U.S. EPA/OAQPS/CORE CBI Office, Attention: Group Leader, Measurement Policy Group, MD C404–02, 4930 Old Page Rd., Durham, NC 27703. The same file with the CBI omitted must be submitted to the EPA via the EPA's CDX

as described earlier in this paragraph (e). All CBI claims must be asserted at the time of submission. Furthermore, under CAA section 114(c) emissions data is not entitled to confidential treatment and requires EPA to make emissions data available to the public. Thus, emissions data will not be protected as CBI and will be made publicly available.

(f) *Performance test results submission requirements.* Within 60 days after the date of completing each performance test required by this subpart, you must submit the results of the performance test following the procedures specified in paragraphs (f)(1) through (3) of this section.

(1) *Data collected using test methods supported by the EPA's Electronic Reporting Tool (ERT) as listed on the EPA's ERT website (https://www.epa.gov/electronic-reporting-air-emissions/electronic-reporting-tool-ert) at the time of the test.* Submit the results of the performance test to the EPA via the CEDRI, which can be accessed through the EPA's CDX (*https://cdx.epa.gov/*). The data must be submitted in a file format generated through the use of the EPA's ERT. Alternatively, you may submit an electronic file consistent with the XML schema listed on the EPA's ERT website.

(2) *Data collected using test methods that are not supported by the EPA's ERT as listed on the EPA's ERT website at the time of the test.* The results of the performance test must be included as an attachment in the ERT or an alternate electronic file consistent with the XML schema listed on the EPA's ERT website. Submit the ERT generated package or alternative file to the EPA via CEDRI.

(3) *Confidential business information.* The EPA will make all the information submitted through CEDRI available to the public without further notice to you. Do not use CEDRI to submit information you claim as CBI. Anything submitted using CEDRI cannot later be claimed to be CBI. Although we do not expect persons to assert a claim of CBI, if you claim some of the information submitted under paragraph (f)(1) or (2) of this section is CBI, you must submit a complete file, including information claimed to be CBI, to the EPA. The file must be generated through the use of the EPA's ERT or an alternate electronic file consistent with the XML schema listed on the EPA's ERT website. Submit the file on a compact disc, flash drive, or other commonly used electronic storage medium and clearly mark the medium as CBI. Mail the electronic medium to U.S. EPA/OAQPS/CORE CBI Office, Attention: Group Leader, Measurement Policy Group, MD C404–02, 4930 Old Page Rd., Durham, NC 27703. The same file with the CBI omitted must be submitted to the EPA via the EPA's CDX as described in paragraph (f)(1) of this section. All CBI claims must be asserted at the time of submission. Furthermore, under CAA section 114(c) emissions data is not entitled to confidential treatment and requires EPA to make emissions data available to the public. Thus, emissions data will not be protected as CBI and will be made publicly available.

(g) *Performance evaluation results submission requirements.* Within 60 days after the date of completing each continuous monitoring system (CMS) performance evaluation (as defined in § 63.2), you must submit the results of the performance evaluation following the procedures specified in paragraphs (g)(1) through (3) of this section.

(1) *Performance evaluations of CMS measuring relative accuracy test audit (RATA) pollutants that are supported by the EPA's ERT as listed on the EPA's ERT website at the time of the evaluation.* Submit the results of the performance evaluation to the EPA via CEDRI, which can be accessed through the EPA's CDX. The data must be submitted in a file format generated through the use of the EPA's ERT. Alternatively, you may submit an electronic file consistent with the XML schema listed on the EPA's ERT website.

(2) *Performance evaluations of CMS measuring RATA pollutants that are not supported by the EPA's ERT as listed on the EPA's ERT website at the time of the evaluation.* The results of the performance evaluation must be included as an attachment in the ERT or an alternate electronic file consistent with the XML schema listed on the EPA's ERT website. Submit the ERT generated package or alternative file to the EPA via CEDRI.

(3) *Confidential business information.* The EPA will make all the information submitted through CEDRI available to the public without further notice to you. Do not use CEDRI to submit information you claim as CBI. Anything submitted using CEDRI cannot later be claimed to be CBI. Although we do not expect persons to assert a claim of CBI, if you claim some of the information submitted under paragraph (g)(1) or (2) of this section is CBI, you must submit a complete file, including information claimed to be CBI, to the EPA. The file must be generated through the use of the EPA's ERT or an alternate electronic file consistent with the XML schema listed on the EPA's ERT website. Submit the file on a compact disc, flash drive, or other commonly used electronic storage medium and clearly mark the medium as CBI. Mail the electronic medium to U.S. EPA/OAQPS/CORE CBI Office, Attention: Group Leader, Measurement Policy Group, MD C404–02, 4930 Old Page Rd., Durham, NC 27703. The same file with the CBI omitted must be submitted to the EPA via the EPA's CDX as described in paragraph (g)(1) of this section. All CBI claims must be asserted at the time of submission. Furthermore, under CAA section 114(c) emissions data is not entitled to confidential treatment and requires EPA to make emissions data available to the public. Thus, emissions data will not be protected as CBI and will be made publicly available.

(h) *Claims of EPA system outage.* If you are required to electronically submit a report through CEDRI in the EPA's CDX, you may assert a claim of EPA system outage for failure to timely comply with the reporting requirement. To assert a claim of EPA system outage, you must meet the requirements outlined in paragraphs (h)(1) through (7) of this section.

(1) You must have been or will be precluded from accessing CEDRI and submitting a required report within the time prescribed due to an outage of either the EPA's CEDRI or CDX systems.

(2) The outage must have occurred within the period of time beginning five business days prior to the date that the submission is due.

(3) The outage may be planned or unplanned.

(4) You must submit notification to the Administrator in writing as soon as possible following the date you first knew, or through due diligence should have known, that the event may cause or has caused a delay in reporting.

(5) You must provide to the Administrator a written description identifying:

(i) The date(s) and time(s) when CDX or CEDRI was accessed and the system was unavailable;

(ii) A rationale for attributing the delay in reporting beyond the regulatory deadline to EPA system outage;

(iii) Measures taken or to be taken to minimize the delay in reporting; and

(iv) The date by which you propose to report, or if you have already met the reporting requirement at the time of the notification, the date you reported.

(6) The decision to accept the claim of EPA system outage and allow an extension to the reporting deadline is solely within the discretion of the Administrator.

(7) In any circumstance, the report must be submitted electronically as

soon as possible after the outage is resolved.

(i) *Claims of force majeure.* If you are required to electronically submit a report through CEDRI in the EPA's CDX, you may assert a claim of force majeure for failure to timely comply with the reporting requirement. To assert a claim of force majeure, you must meet the requirements outlined in paragraphs (i)(1) through (5) of this section.

(1) You may submit a claim if a force majeure event is about to occur, occurs, or has occurred or there are lingering effects from such an event within the period of time beginning five business days prior to the date the submission is due. For the purposes of this section, a force majeure event is defined as an event that will be or has been caused by circumstances beyond the control of the affected facility, its contractors, or any entity controlled by the affected facility that prevents you from complying with the requirement to submit a report electronically within the time period prescribed. Examples of such events are acts of nature (*e.g.,* hurricanes, earthquakes, or floods), acts of war or terrorism, or equipment failure or safety hazard beyond the control of the affected facility (*e.g.,* large scale power outage).

(2) You must submit notification to the Administrator in writing as soon as possible following the date you first knew, or through due diligence should have known, that the event may cause or has caused a delay in reporting.

(3) You must provide to the Administrator:

(i) A written description of the force majeure event;

(ii) A rationale for attributing the delay in reporting beyond the regulatory deadline to the force majeure event;

(iii) Measures taken or to be taken to minimize the delay in reporting; and

(iv) The date by which you propose to report, or if you have already met the reporting requirement at the time of the notification, the date you reported.

(4) The decision to accept the claim of force majeure and allow an extension to the reporting deadline is solely within the discretion of the Administrator.

(5) In any circumstance, the reporting must occur as soon as possible after the force majeure event occurs.

■ 12. Section 63.7752 is amended by:

■ a. Revising paragraph (a)(2);

■ b. Revising paragraphs (b)(2) and (4); and

■ c. Adding paragraphs (d) and (e).

The revisions and additions read as follows:

§ 63.7752 What records must I keep?

(a) * * *

(2) Records of required maintenance performed on the air pollution control and monitoring equipment as required by § 63.10(b)(2)(iii).

* * * * *

(b) * * *

(2) Records of the site-specific performance evaluation test plan required under § 63.8(d)(2) for the life of the affected source or until the affected source is no longer subject to the provisions of this part, to be made available for inspection, upon request, by the Administrator. If the performance evaluation plan is revised, you shall keep previous (*i.e.,* superseded) versions of the performance evaluation plan on record to be made available for inspection, upon request, by the Administrator, for a period of 5 years after each revision to the plan. The program of corrective action should be included in the plan as required under § 63.8(d)(2)(vi).

* * * * *

(4) Records of the date and time that each deviation started and stopped.

* * * * *

(d) You must keep the following records for each failure to meet an emissions limitation (including operating limit), work practice standard, or operation and maintenance requirement in this subpart.

(1) Date, start time, and duration of each failure.

(2) List of the affected sources or equipment for each failure, an estimate of the quantity of each regulated pollutant emitted over any emission limit and a description of the method used to estimate the emissions.

(3) Actions taken to minimize emissions in accordance with § 63.7710(a), and any corrective actions taken to return the affected unit to its normal or usual manner of operation.

(e) Any records required to be maintained by this part that are submitted electronically via the EPA's CEDRI may be maintained in electronic format. This ability to maintain electronic copies does not affect the requirement for facilities to make records, data, and reports available upon request to a delegated air agency or the EPA as part of an on-site compliance evaluation.

■ 13. Section 63.7761 is amended by revising paragraph (c) introductory text and adding paragraph (c)(5) to read as follows:

§ 63.7761 Who implements and enforces this subpart?

* * * * *

(c) The authorities that cannot be delegated to state, local, or tribal agencies are specified in paragraphs (c)(1) through (5) of this section.

* * * * *

(5) Approval of an alternative to any electronic reporting to the EPA required by this subpart.

■ 14. Section 63.7765 is amended by adding in alphabetical order the definitions for ''Cupola shutdown'' and ''Cupola startup'' and revising the definitions for ''Deviation'' (including the undesignated paragraph following the definition) and ''Off blast'' to read as follows:

§ 63.7765 What definitions apply to this subpart?

* * * * *

Cupola shutdown means the period beginning when the last of the molten metal is tapped from the cupola's primary tap hole and ending when the cupola is cooled and the cupola is either banked or the bottom contents are removed (''bottom drop''). *Cupola shutdown* includes the following steps: slag and residual metal removal from secondary tap; cupola cooling; and cupola banking or bottom drop.

Cupola startup means the commencement of activities needed to take a banked cupola or a cupola that has had the bottom dropped back into melt production. *Cupola startup* includes the following steps: refractory curing, if needed; cupola bed preparation (during which the sand bed is preheated), if needed; coke bed preparation (during which coke is added to the cupola and lit); and initial metallics charging.

Deviation means any instance in which an affected source or an owner or operator of such an affected source:

(1) Fails to meet any requirement or obligation established by this subpart including, but not limited to, any emissions limitation (including operating limits), work practice standard, or operation and maintenance requirement; or

(2) Fails to meet any term or condition that is adopted to implement an applicable requirement in this subpart and that is included in the operating permit for any iron and steel foundry required to obtain such a permit.

(3) A deviation is not always a violation. The determination of whether a deviation constitutes a violation of the standard is up to the discretion of the entity responsible for enforcement of the standards.

* * * * *

Off blast means those periods of cupola operation when the cupola is not actively being used to produce molten metal. *Off blast* conditions include

cupola startup and cupola shutdown. *Off blast* conditions also include idling conditions when the blast air is turned off or down to the point that the cupola does not produce additional molten metal.

* * * * *

■ 15. Table 1 to subpart EEEEE of part 63 is revised to read as follows:

TABLE 1 TO SUBPART EEEEE OF PART 63—APPLICABILITY OF GENERAL PROVISIONS TO THIS SUBPART

[As stated in § 63.7760, you must meet each requirement in the following table that applies to you]

Citation	Subject	Applies to this subpart?	Explanation
63.1	Applicability	Yes	
63.2	Definitions	Yes	
63.3	Units and abbreviations	Yes	
63.4	Prohibited activities	Yes	
63.5	Construction/reconstruction	Yes	
63.6(a) through (d)	Compliance applicability and dates	Yes	
63.6(e)	Operating and maintenance requirements.	No	This subpart specifies operating and maintenance requirements.
63.6(f)(1)	Applicability of non-opacity emission standards.	No	This subpart specifies applicability of non-opacity emission standards.
63.6(f)(2) through (3)	Methods and finding of compliance with non-opacity emission standards.	Yes	
63.6(g)	Use of an alternative nonopacity emission standard.	Yes	
63.6(h)(1)	Applicability of opacity and visible emissions standards.	No	This subpart specifies applicability of opacity and visible emission standards.
63.6(h)(2) through (9)	Methods and other requirements for opacity and visible emissions standards.	Yes	
63.6(i) through (j)	Compliance extension and Presidential compliance exemption.	Yes	
63.7(a)(1) through (2)	Applicability and performance test dates	No	This subpart specifies applicability and performance test dates.
63.7(a)(3) through (4)	Administrators rights to require a performance test and force majeure provisions.	Yes	
63.7(b) through (d)	Notification of performance test, quality assurance program, and testing facilities.	Yes	
63.7(e)(1)	Performance test conditions	No	This subpart specifies performance test conditions.
63.7(e)(2) through (4), (f) through (h)	Other performance testing requirements	Yes	
63.8(a)(1) through (3), (b), (c)(1)(ii), (c)(2) through (3), (c)(6) through (8), (d)(1) through (2).	Monitoring requirements	Yes	
63.8(a)(4)	Additional monitoring requirements for control devices in § 63.11.	No	This subpart does not require flares.
63.8(c)(1)(i), (c)(1)(iii)	Operation and maintenance of continuous monitoring systems.	No	Not necessary in light of other requirements of § 63.8 that apply.
63.8(c)(4)	CMS requirements	No	This subpart specifies requirements for operation of CMS and CEMS.
63.8(c)(5)	Continuous opacity monitoring system (COMS) Minimum Procedures.	No	This subpart does not require COMS.
63.8(d)(3)	Quality control program	No	This subpart specifies records that must be kept associated with site-specific performance evaluation test plan.
63.8(e), (f)(1) through (6), (g)(1) through (4).	Performance evaluations and alternative monitoring.	Yes	This subpart specifies requirements for alternative monitoring systems.
63.8(g)(5)	Data reduction	No	This subpart specifies data reduction requirements.
63.9	Notification requirements	Yes	Except: for opacity performance tests, this subpart allows the notification of compliance status to be submitted with the semiannual compliance report or the semiannual part 70 of this chapter monitoring report.
63.10(a),(b)(1), (b)(2)(iii) and (vi) through (xiv), (b)(3), (c)(1) through (6), (c)(9) through (14), (d)(1) through (4), (e)(1) through (2), (f).	Recordkeeping and reporting requirements.	Yes	Additional records for CMS in § 63.10(c)(1)-(6), (9)-(15) apply only to CEMS.
63.10(b)(2)(i), (ii), (iv) and (v)	Recordkeeping for startup, shutdown, and malfunction events.	No	

TABLE 1 TO SUBPART EEEEE OF PART 63—APPLICABILITY OF GENERAL PROVISIONS TO THIS SUBPART—Continued

[As stated in § 63.7760, you must meet each requirement in the following table that applies to you]

Citation	Subject	Applies to this subpart?	Explanation
63.10(c)(7), (8) and (15)	Records of excess emissions and parameter monitoring exceedances for CMS.	No	This subpart specifies records requirements.
63.10(d)(5)	Periodic startup, shutdown, and malfunction reports.	No	
63.10(e)(3)	Excess emissions reports	No	This subpart specifies reporting requirements.
63.10(e)(4)	Reporting COMS data	No	This subpart data does not require COMS.
63.11	Control device requirements	No	This subpart does not require flares.
63.12	State authority and delegations	Yes	
63.13(a)	Reporting to EPA regional offices	Yes	Except: reports and notifications required to be submitted to CEDRI meet this obligation through electronic reporting.
63.13(b) through 63.15	Addresses of state air pollution control agencies. Incorporation by reference. Availability of information and confidentiality.	Yes	

Subpart ZZZZZ—National Emission Standards for Hazardous Air Pollutants for Iron and Steel Foundries Area Sources

■ 16. Section 63.10885 is amended by revising paragraph (a)(1) to read as follows:

§ 63.10885 What are my management practices for metallic scrap and mercury switches?

(a) * * *

(1) *Restricted metallic scrap.* You must prepare and operate at all times according to written material specifications for the purchase and use of only metal ingots, pig iron, slitter, or other materials that do not include post-consumer automotive body scrap, post-consumer engine blocks, post-consumer oil filters, oily turnings, lead components, chlorinated plastics, or free liquids. For the purpose of this subpart, ''free liquids'' is defined as material that fails the paint filter test by EPA Method 9095B, ''Paint Filter Liquids Test'' (revision 2), November 2004 (incorporated by reference—see § 63.14). The requirements for no free liquids do not apply if the owner or operator can demonstrate that the free liquid is water that resulted from scrap exposure to rain. Any post-consumer engine blocks, post-consumer oil filters, or oily turnings that are processed and/or cleaned to the extent practicable such that the materials do not include lead components, mercury switches, chlorinated plastics, or free organic liquids can be included in this certification.

* * * * *

■ 17. Section 63.10890 is amended by revising paragraphs (c) introductory text, (d), (e)(3), (f), and (i) and adding paragraph (j) to read as follows:

§ 63.10890 What are my management practices and compliance requirements?

* * * * *

(c) You must submit a notification of compliance status according to § 63.9(h)(2)(i). You must send the notification of compliance status before the close of business on the 30th day after the applicable compliance date specified in § 63.10881. The notification must include the following compliance certifications, as applicable:

* * * * *

(d) As required by § 63.10(b)(1), you must maintain files of all information (including all reports and notifications) for at least 5 years following the date of each occurrence, measurement, maintenance, corrective action, report, or record. At a minimum, the most recent 2 years of data shall be retained on site. The remaining 3 years of data may be retained off site. Such files may be maintained on microfilm, on a computer, on computer floppy disks, on magnetic tape disks, or on microfiche. Any records required to be maintained by this part that are submitted electronically via the EPA's Compliance and Emissions Data Reporting Interface (CEDRI) may be maintained in electronic format. This ability to maintain electronic copies does not affect the requirement for facilities to make records, data, and reports available upon request to a delegated air agency or the EPA as part of an on-site compliance evaluation.

(e) * * *

(3) If you are subject to the requirements for a site-specific plan for mercury switch removal under § 63.10885(b)(1), you must maintain records of the number of mercury switches removed or the weight of mercury recovered from the switches and properly managed, the estimated number of vehicles processed, and an estimate of the percent of mercury switches recovered.

* * * * *

(f) You must submit semiannual compliance reports to the Administrator according to the requirements in § 63.10899(c), (f), and (g), except that § 63.10899(c)(5) and (7) do not apply.

* * * * *

(i) At all times, you must operate and maintain any affected source, including associated air pollution control equipment and monitoring equipment, in a manner consistent with safety and good air pollution control practices for minimizing emissions.

(j) You must comply with the following requirements of the general provisions in subpart A of this part: §§ 63.1 through 63.5; § 63.6(a), (b), and (c); § 63.9; § 63.10(a), (b)(1), (b)(2)(xiv), (b)(3), (d)(1) and (4), and (f); and §§ 63.13 through 63.16. Requirements of the general provisions not cited in the preceding sentence do not apply to the owner or operator of a new or existing affected source that is classified as a small foundry.

■ 18. Section 63.10896 is amended by adding paragraph (c) to read as follows:

§ 63.10896 What are my operation and maintenance requirements?

* * * * *

(c) At all times, you must operate and maintain any affected source, including associated air pollution control equipment and monitoring equipment, in a manner consistent with safety and good air pollution control practices for minimizing emissions.

■ 19. Section 63.10897 is amended by revising paragraphs (d)(1)(i), (d)(3) introductory text, and (g) to read as follows:

§ 63.10897 What are my monitoring requirements?

* * * * *

(d) * * *

(1) * * *

(i) The system must be certified by the manufacturer to be capable of detecting emissions of particulate matter at concentrations of 10 milligrams per actual cubic meter (0.0044 grains per actual cubic foot) or less.

* * * * *

(3) In the event that a bag leak detection system alarm is triggered, you must initiate corrective action to determine the cause of the alarm within 1 hour of the alarm, initiate corrective action to correct the cause of the problem within 24 hours of the alarm, and complete corrective action as soon as practicable, but no later than 10 calendar days from the date of the alarm. You must record the date and time of each valid alarm, the time you initiated corrective action, the corrective action taken, and the date on which corrective action was completed. Corrective actions may include, but are not limited to:

* * * * *

(g) In the event of an exceedance of an established emissions limitation (including an operating limit), you must restore operation of the emissions source (including the control device and associated capture system) to its normal or usual manner or operation as expeditiously as practicable in accordance with good air pollution control practices for minimizing emissions. The response shall include taking any necessary corrective actions to restore normal operation and prevent the likely recurrence of the exceedance. You must record the date and time corrective action was initiated, the corrective action taken, and the date corrective action was completed.

* * * * *

■ 20. Section 63.10898 is amended by revising paragraph (c) to read as follows:

§ 63.10898 What are my performance test requirements?

* * * * *

(c) You must conduct each performance test under conditions representative of normal operations according to the requirements in Table 1 to this subpart and paragraphs (d) through (g) of this section. Normal operating conditions exclude periods of startup and shutdown. You may not conduct performance tests during periods of malfunction. You must record the process information that is necessary to document operating conditions during the test and include in such record an explanation to support that such conditions represent normal operation. Upon request, you shall make available to the Administrator such records as may be necessary to determine the conditions of performance tests.

* * * * *

■ 21. Section 63.10899 is amended is amended by:

■ a. Revising paragraphs (a), (b) introductory text, and (b)(2);

■ b. Adding paragraphs (b)(14) and (15);

■ c. Revising paragraph (c); and

■ d. Adding paragraphs (e) through (g).

The revisions and additions read as follows:

§ 63.10899 What are my recordkeeping and reporting requirements?

(a) As required by § 63.10(b)(1), you must maintain files of all information (including all reports and notifications) for at least 5 years following the date of each occurrence, measurement, maintenance, corrective action, report, or record. At a minimum, the most recent 2 years of data shall be retained on site. The remaining 3 years of data may be retained off site. Such files may be maintained on microfilm, on a computer, on computer floppy disks or flash drives, on magnetic tape disks, or on microfiche. Any records required to be maintained by this part that are submitted electronically via the EPA's CEDRI may be maintained in electronic format. This ability to maintain electronic copies does not affect the requirement for facilities to make records, data, and reports available upon request to a delegated air agency or the EPA as part of an on-site compliance evaluation.

(b) In addition to the records required by § 63.10(b)(2)(iii) and (vi) through (xiv) and (b)(3), you must keep records of the information specified in paragraphs (b)(1) through (15) of this section.

* * * * *

(2) If you are subject to the requirements for a site-specific plan for mercury under § 63.10885(b)(1), you must maintain records of the number of mercury switches removed or the weight of mercury recovered from the switches and properly managed, the estimated number of vehicles processed, and an estimate of the percent of mercury switches recovered.

* * * * *

(14) You must keep records of the site-specific performance evaluation test plan required under § 63.8(d)(2) for the life of the affected source or until the affected source is no longer subject to the provisions of this part, to be made available for inspection, upon request, by the Administrator. If the performance evaluation plan is revised, you shall keep previous (*i.e.,* superseded) versions of the performance evaluation plan on record to be made available for inspection, upon request, by the Administrator, for a period of 5 years after each revision to the plan. The program of corrective action should be included in the plan as required under § 63.8(d)(2)(vi).

(15) You must keep the following records for each failure to meet an emissions limitation (including operating limit), work practice standard, or operation and maintenance requirement in this subpart.

(i) Date, start time, and duration of each failure.

(ii) List of the affected sources or equipment for each failure, an estimate of the quantity of each regulated pollutant emitted over any emission limit and a description of the method used to estimate the emissions.

(iii) Actions taken to minimize emissions in accordance with § 63.10896(c), and any corrective actions taken to return the affected unit to its normal or usual manner of operation.

(c) Prior to March 9, 2021, you must submit semiannual compliance reports to the Administrator according to the requirements in § 63.13. Beginning on March 9, 2021, you must submit all subsequent semiannual compliance reports to the EPA via the CEDRI, which can be accessed through the EPA's Central Data Exchange (CDX) (*https://cdx.epa.gov/*). The EPA will make all the information submitted through CEDRI available to the public without further notice to you. Do not use CEDRI to submit information you claim as confidential business information (CBI). Anything submitted using CEDRI cannot later be claimed to be CBI. You must use the appropriate electronic report template on the CEDRI website (*https://www.epa.gov/electronic-reporting-air-emissions/cedri*) for this subpart. The date report templates become available

will be listed on the CEDRI website. The report must be submitted by the deadline specified in this subpart, regardless of the method in which the report is submitted. Although we do not expect persons to assert a claim of CBI, if persons wish to assert a CBI if you claim some of the information required to be submitted via CEDRI is CBI, submit a complete report, including information claimed to be CBI, to the EPA. The report must be generated using the appropriate form on the CEDRI website or an alternate electronic file consistent with the extensible markup language (XML) schema listed on the CEDRI website. Submit the file on a compact disc, flash drive, or other commonly used electronic storage medium and clearly mark the medium as CBI. Mail the electronic medium to U.S. EPA/OAQPS/CORE CBI Office, Attention: Group Leader, Measurement Policy Group, MD C404–02, 4930 Old Page Rd., Durham, NC 27703. The same file with the CBI omitted must be submitted to the EPA via the EPA's CDX as described earlier in this paragraph (c). All CBI claims must be asserted at the time of submission. Furthermore, under CAA section 114(c) emissions data is not entitled to confidential treatment and requires EPA to make emissions data available to the public. Thus, emissions data will not be protected as CBI and will be made publicly available. The reports must include the information specified in paragraphs (c)(1) through (3) of this section and, as applicable, paragraphs (c)(4) through (9) of this section.

(1) Company name and address.

(2) Statement by a responsible official, with that official's name, title, and signature, certifying the truth, accuracy, and completeness of the content of the report.

(3) Date of report and beginning and ending dates of the reporting period.

(4) If there were no deviations from any emissions limitations (including operating limits, pollution prevention management practices, or operation and maintenance requirements), a statement that there were no deviations from the emissions limitations, pollution prevention management practices, or operation and maintenance requirements during the reporting period.

(5) If there were no periods during which a continuous monitoring system (including a CPMS or continuous emissions monitoring system (CEMS) was inoperable or out-of-control as specified by § 63.8(c)(7), a statement that there were no periods during which the CPMS was inoperable or out-of-control during the reporting period.

(6) For each affected source or equipment for which there was a deviation from an emissions limitation (including an operating limit, pollution prevention management practice, or operation and maintenance requirement) that occurs at an iron and steel foundry during the reporting period, the compliance report must contain the information specified in paragraphs (c)(6)(i) through (iii) of this section. The requirement in this paragraph (c)(6) includes periods of startup, shutdown, and malfunction.

(i) A list of the affected source or equipment and the total operating time of each emissions source during the reporting period.

(ii) For each deviation from an emissions limitation (including an operating limit, pollution prevention management practice, or operation and maintenance requirement) that occurs at an iron and steel foundry during the reporting period, report:

(A) The date, start time, duration (in hours), and cause of each deviation (characterized as either startup, shutdown, control equipment problem, process problem, other known cause, or unknown cause, as applicable) and the corrective action taken; and

(B) An estimate of the quantity of each regulated pollutant emitted over any emission limit and a description of the method used to estimate the emissions.

(iii) A summary of the total duration (in hours) of the deviations that occurred during the reporting period by cause (characterized as startup, shutdown, control equipment problems, process problems, other known causes, and unknown causes) and the cumulative duration of deviations during the reporting period across all causes both in hours and as a percent of the total source operating time during the reporting period.

(7) For each continuous monitoring system (including a CPMS or CEMS) used to comply with the emissions limitation or work practice standard in this subpart that was inoperable or out-of-control during any portion of the reporting period, you must include the information specified in paragraphs (c)(7)(i) through (vi) of this section. The requirement in this paragraph (c)(7) includes periods of startup, shutdown, and malfunction.

(i) A brief description of the continuous monitoring system, including manufacturer and model number.

(ii) The date of the latest continuous monitoring system certification or audit.

(iii) A brief description and the total operating time of the affected source or equipment that is monitored by the continuous monitoring system during the reporting period.

(iv) A description of any changes in continuous monitoring systems, processes, or controls since the last reporting period.

(v) For each period for which the continuous monitoring system was inoperable or out-of-control during the reporting period, report:

(A) The date, start time, and duration (in hours) of the deviation;

(B) The type of deviation (inoperable or out-of-control); and

(C) The cause of deviation (characterized as monitoring system malfunctions, non-monitoring equipment malfunctions, quality assurance/quality control calibrations, other known causes, and unknown causes, as applicable) and the corrective action taken.

(vi) A summary of the total duration (in hours) of the deviations that occurred during the reporting period by cause (characterized as monitoring system malfunctions, non-monitoring equipment malfunctions, quality assurance/quality control calibrations, other known causes, and unknown causes) and the cumulative duration of deviations during the reporting period across all causes both in hours and as a percent of the total source operating time during the reporting period.

(8) Identification of which option in § 63.10885(b) applies to you. If you comply with the mercury requirements in § 63.10885(b) by using one scrap provider, contract, or shipment subject to one compliance provision and others subject to another compliance provision different, provide an identification of which option in § 63.10885(b) applies to each scrap provider, contract, or shipment.

(9) If you are subject to the requirements for a site-specific plan for mercury under § 63.10885(b)(1), include:

(i) The number of mercury switches removed or the weight of mercury recovered from the switches and properly managed, the estimated number of vehicles processed, an estimate of the percent of mercury switches recovered;

(ii) A certification that the recovered mercury switches were recycled at RCRA-permitted facilities; and

(iii) A certification that you have conducted periodic inspections or taken other means of corroboration as required under § 63.10885(b)(1)(ii)(C).

* * * * *

(e) Within 60 days after the date of completing each performance test required by this subpart, you must

submit the results of the performance test following the procedures specified in paragraphs (e)(1) through (3) of this section.

(1) *Data collected using test methods supported by the EPA's Electronic Reporting Tool (ERT) as listed on the EPA's ERT website (https://www.epa.gov/electronic-reporting-air-emissions/electronic-reporting-tool-ert) at the time of the test.* Submit the results of the performance test to the EPA via the CEDRI, which can be accessed through the EPA's CDX (*https://cdx.epa.gov/*). The data must be submitted in a file format generated through the use of the EPA's ERT. Alternatively, you may submit an electronic file consistent with the XML schema listed on the EPA's ERT website.

(2) *Data collected using test methods that are not supported by the EPA's ERT as listed on the EPA's ERT website at the time of the test.* The results of the performance test must be included as an attachment in the ERT or an alternate electronic file consistent with the XML schema listed on the EPA's ERT website. Submit the ERT generated package or alternative file to the EPA via CEDRI.

(3) *Confidential business information.* The EPA will make all the information submitted through CEDRI available to the public without further notice to you. Do not use CEDRI to submit information you claim as CBI. Anything submitted using CEDRI cannot later be claimed to be CBI. Although we do not expect persons to assert a claim of CBI if you claim some of the information submitted under paragraph (e)(1) or (2) of this section is CBI, you must submit a complete file, including information claimed to be CBI, to the EPA. The file must be generated through the use of the EPA's ERT or an alternate electronic file consistent with the XML schema listed on the EPA's ERT website. Submit the file on a compact disc, flash drive, or other commonly used electronic storage medium and clearly mark the medium as CBI. Mail the electronic medium to U.S. EPA/OAQPS/CORE CBI Office, Attention: Group Leader, Measurement Policy Group, MD C404–02, 4930 Old Page Rd., Durham, NC 27703. The same file with the CBI omitted must be submitted to the EPA via the EPA's CDX as described in paragraph (e)(1) of this section. All CBI claims must be asserted at the time of submission. Furthermore, under CAA section 114(c) emissions data is not entitled to confidential treatment and requires EPA to make emissions data available to the public. Thus, emissions data will not be protected as CBI and will be made publicly available.

(f) If you are required to electronically submit a report through CEDRI in the EPA's CDX, you may assert a claim of EPA system outage for failure to timely comply with the reporting requirement. To assert a claim of EPA system outage, you must meet the requirements outlined in paragraphs (f)(1) through (7) of this section.

(1) You must have been or will be precluded from accessing CEDRI and submitting a required report within the time prescribed due to an outage of either the EPA's CEDRI or CDX systems.

(2) The outage must have occurred within the period of time beginning 5 business days prior to the date that the submission is due.

(3) The outage may be planned or unplanned.

(4) You must submit notification to the Administrator in writing as soon as possible following the date you first knew, or through due diligence should have known, that the event may cause or has caused a delay in reporting.

(5) You must provide to the Administrator a written description identifying:

(i) The date(s) and time(s) when CDX or CEDRI was accessed and the system was unavailable;

(ii) A rationale for attributing the delay in reporting beyond the regulatory deadline to EPA system outage;

(iii) Measures taken or to be taken to minimize the delay in reporting; and

(iv) The date by which you propose to report, or if you have already met the reporting requirement at the time of the notification, the date you reported.

(6) The decision to accept the claim of EPA system outage and allow an extension to the reporting deadline is solely within the discretion of the Administrator.

(7) In any circumstance, the report must be submitted electronically as soon as possible after the outage is resolved.

(g) If you are required to electronically submit a report through CEDRI in the EPA's CDX, you may assert a claim of force majeure for failure to timely comply with the reporting requirement. To assert a claim of force majeure, you must meet the requirements outlined in paragraphs (g)(1) through (5) of this section.

(1) You may submit a claim if a force majeure event is about to occur, occurs, or has occurred or there are lingering effects from such an event within the period of time beginning five business days prior to the date the submission is due. For the purposes of this section, a force majeure event is defined as an event that will be or has been caused by circumstances beyond the control of the affected facility, its contractors, or any entity controlled by the affected facility that prevents you from complying with the requirement to submit a report electronically within the time period prescribed. Examples of such events are acts of nature (*e.g.,* hurricanes, earthquakes, or floods), acts of war or terrorism, or equipment failure or safety hazard beyond the control of the affected facility (*e.g.,* large scale power outage).

(2) You must submit notification to the Administrator in writing as soon as possible following the date you first knew, or through due diligence should have known, that the event may cause or has caused a delay in reporting.

(3) You must provide to the Administrator:

(i) A written description of the force majeure event;

(ii) A rationale for attributing the delay in reporting beyond the regulatory deadline to the force majeure event;

(iii) Measures taken or to be taken to minimize the delay in reporting; and

(iv) The date by which you propose to report, or if you have already met the reporting requirement at the time of the notification, the date you reported.

■ 22. Section 63.10905 is amended by revising paragraph (c) introductory text and adding paragraph (c)(7) to read as follows:

§ 63.10905 Who implements and enforces this subpart?

* * * * *

(c) The authorities that cannot be delegated to state, local, or tribal agencies are specified in paragraphs (c)(1) through (7) of this section.

* * * * *

(7) Approval of an alternative to any electronic reporting to the EPA required by this subpart.

■ 23. Section 63.10906 is amended by revising the definition for ''Deviation'' to read as follows:

§ 63.10906 What definitions apply to this subpart?

* * * * *

Deviation means any instance in which an affected source or an owner or operator of such an affected source:

(1) Fails to meet any requirement or obligation established by this subpart including, but not limited to, any emissions limitation (including operating limits), management practice, or operation and maintenance requirement; or

(2) Fails to meet any term or condition that is adopted to implement an applicable requirement in this subpart

and that is included in the operating permit for any iron and steel foundry required to obtain such a permit.

* * * * *

■ 24. Table 3 to subpart ZZZZZ of part 63 is revised to read as follows:

TABLE 3 TO SUBPART ZZZZZ OF PART 63—APPLICABILITY OF GENERAL PROVISIONS TO NEW AND EXISTING AFFECTED SOURCES CLASSIFIED AS LARGE FOUNDRIES

[As required in § 63.10900(a), you must meet each requirement in the following table that applies to you]

Citation	Subject	Applies to large foundry?	Explanation
63.1	Applicability	Yes.	
63.2	Definitions	Yes.	
63.3	Units and abbreviations	Yes.	
63.4	Prohibited activities	Yes.	
63.5	Construction/reconstruction	Yes.	
63.6(a) through (d)	Compliance applicability and dates	Yes.	
63.6(e)	Operating and maintenance requirements.	No	This subpart specifies operating and maintenance requirements.
63.6(f)(1)	Applicability of non-opacity emission standards.	No	This subpart specifies applicability of non-opacity emission standards.
63.6(f)(2) through (3)	Methods and finding of compliance with non-opacity emission standards.	Yes.	
63.6(g)	Use of an alternative nonopacity emission standard.	Yes.	
63.6(h)(1)	Applicability of opacity and visible emissions standards.	No	This subpart specifies applicability of opacity and visible emission standards.
63.6(h)(2) through (9)	Methods and other requirements for opacity and visible emissions standards.	Yes.	
63.6(i) through (j)	Compliance extension and Presidential compliance exemption.	Yes.	
63.7(a)(1) through (2)	Applicability and performance test dates.	No	This subpart specifies applicability and performance test dates.
63.7(a)(3) through (4)	Administrators rights to require a performance test and force majeure provisions.	Yes.	
63.7(b) through (d)	Notification of performance test, quality assurance program, and testing facilities.	Yes.	
63.7(e)(1)	Performance test conditions	No	This subpart specifies performance test conditions.
63.7(e)(2) through (4), (f) through (h)	Other performance testing requirements.	Yes.	
63.8(a)(1) through (3), (b), (c)(1)(ii), (c)(2) through (3), (c)(6) through (8), (d)(1) through (2).	Monitoring requirements	Yes.	
63.8(a)(4)	Additional monitoring requirements for control devices in § 63.11.	No.	
63.8(c)(1)(i), (c)(1)(iii)	Operation and maintenance of continuous monitoring systems.	No	Not necessary in light of other requirements of § 63.8 that apply.
63.8(c)(4)	Continuous monitoring system (CMS) requirements.	No.	
63.8(c)(5)	Continuous opacity monitoring system (COMS) minimum procedures.	No.	
63.8(d)(3)	Quality control program	No	This subpart specifies records that must be kept associated with site-specific performance evaluation test plan.
63.8(e), (f)(1) through (6), (g)(1) through (4).	Performance evaluations and alternative monitoring.	Yes.	
63.8(g)(5)	Data reduction	No.	
63.9	Notification requirements	Yes.	Except for opacity performance tests.
63.10(a), (b)(1), (b)(2)(xii) through (xiv), (b)(3), (d)(1) through (4), (e)(1) through (2), (f).	Recordkeeping and reporting requirements.	Yes.	
63.10(b)(2)(i) through (xi)	Malfunction and CMS records	No.	
63.10(c)	Additional records for CMS	No	This subpart specifies records requirements.
63.10(d)(5)	Periodic startup, shutdown, and malfunction reports.	No.	
63.10(e)(3)	Excess emissions reports	No	This subpart specifies reporting requirements.
63.10(e)(4)	Reporting COMS data	No.	

TABLE 3 TO SUBPART ZZZZZ OF PART 63—APPLICABILITY OF GENERAL PROVISIONS TO NEW AND EXISTING AFFECTED SOURCES CLASSIFIED AS LARGE FOUNDRIES—Continued

[As required in § 63.10900(a), you must meet each requirement in the following table that applies to you]

Citation	Subject	Applies to large foundry?	Explanation
63.11	Control device requirements	No.	
63.12	State authority and delegations	Yes.	
63.13(a)	Reporting to EPA regional offices	Yes	Except: reports and notifications required to be submitted to CEDRI meet this obligation through electronic reporting.
63.13(b) through 63.16	Addresses of state air pollution control agencies. Incorporation by reference. Availability of information and confidentiality. Performance track provisions.	Yes.	

[FR Doc. 2020–14143 Filed 9–9–20; 8:45 am]

BILLING CODE 6560–50–P

FEDERAL REGISTER

Vol. 85 Thursday,

No. 176 September 10, 2020

Part IV

Department of Health and Human Services

42 CFR Chapter I

Mandatory Guidelines for Federal Workplace Drug Testing Programs; Proposed Rule

DEPARTMENT OF HEALTH AND HUMAN SERVICES

42 CFR Chapter I

Mandatory Guidelines for Federal Workplace Drug Testing Programs

AGENCY: Substance Abuse and Mental Health Services Administration (SAMHSA), HHS.

ACTION: Notification of mandatory guidelines.

SUMMARY: The Department of Health and Human Services (''HHS'' or ''Department'') is proposing to establish scientific and technical guidelines for the inclusion of hair specimens in the Mandatory Guidelines for Federal Workplace Drug Testing Programs (Guidelines).

DATES: Submit comments on or before November 9, 2020.

ADDRESSES: In commenting, please refer to file code [SAMHSA–2020–0001]. Because of staff and resource limitations, SAMHSA cannot accept comments by facsimile (fax) transmission.

You may submit comments in one of four ways (please choose only one of the ways listed):

•*Electronically.* You may submit electronic comments on this regulation to *http://www.regulations.gov.* Follow ''Submit a comment'' instructions.

•*By regular mail.* You may mail written comments to the following address: SAMHSA, Center for Substance Abuse Prevention (CSAP), Division of Workplace Programs (DWP), 5600 Fishers Lane, Room 16N02, Rockville, MD 20857. Please allow sufficient time for mailed comments to be received before the close of the comment period.

•*By express or overnight mail.* You may send written comments to the following address: SAMHSA, CSAP, DWP, 5600 Fishers Lane, Room 16N02, Rockville, MD 20857.

•*By hand or courier.* You may deliver your written comments by hand or courier to the following address prior to the close of the comment period: SAMHSA, CSAP, DWP, 5600 Fishers Lane, Room 16N02, Rockville, MD 20857. If you intend to deliver your comments to the Rockville address, please call (240) 276–2600 in advance to schedule your arrival with one of our staff members. Because access to the SAMHSA building is secure, persons without federal government identification are encouraged to schedule their delivery or to leave comments with the security guard at the front desk located in the main lobby of the building.

All comments received before the close of the comment period will be available for viewing by the public. Please note that all comments are posted in their entirety, including personal or confidential business information that is included in the comment. SAMHSA will post all comments before the close of the comment period on the following website: *http://www.regulations.gov.* Use the website's search function to view the associated comments.

Comments received before the close of the comment period will also be available for public inspection as they are received, generally beginning approximately three weeks after publication of a document, at SAMHSA, CSAP, DWP, 5600 Fishers Lane, Rockville, MD 20857, Monday through Friday of each week, excluding federal holidays, from 8:30 a.m. to 4:00 p.m. To schedule an appointment to view public comments, please call (240) 276–2600.

FOR FURTHER INFORMATION CONTACT: Eugene D. Hayes, Ph.D., MBA, SAMHSA, CSAP, DWP; 5600 Fishers Lane, Room 16N02, Rockville, MD 20857, by telephone (240) 276–1459 or by email: *Eugene.Hayes@samhsa.hhs.gov.*

SUPPLEMENTARY INFORMATION:

Executive Summary

This notice of proposed Mandatory Guidelines for Federal Workplace Drug Testing Programs using Hair (HMG) will allow federal executive branch agencies to collect and test a hair specimen as part of their drug testing programs with the limitation that hair specimens be used for pre-employment (*i.e.,* for applicants applying for federal testing designated positions) and random testing. A federal agency choosing to test hair specimens must authorize collection and testing of at least one other specimen type (*e.g.,* urine or oral fluid) that is authorized under the Mandatory Guidelines for Federal Workplace Drug Testing Programs, and provide procedures whereby the alternate specimen is used in the event that a donor is unable to provide a sufficient amount of hair for faith-based or medical reasons, or due to an insufficient amount or length of hair. The proposed HMG require collection of an alternate authorized drug testing specimen in addition to the hair specimen, either simultaneously (*i.e.,* at the same collection event) or when directed by the Medical Review Officer (MRO) after review and verification of laboratory-reported results for the hair specimen. This alternate specimen would be tested and reported in place of a donor's positive hair specimen only in certain circumstances, as described below.

These proposed HMG establish standards and technical requirements for hair collection and collection materials, initial hair drug test analytes and methods, confirmatory hair drug test analytes and methods, processes for review by an MRO, standards for certification of laboratories engaged in hair drug testing for federal agencies' drug-free workplace programs, and requirements for federal agency actions that are covered by these Guidelines. The HMG provide flexibility for federal agency workplace drug testing programs to address testing needs by allowing hair as an alternative specimen type.

The Department of Health and Human Services, pursuant to the Department's authority under Section 503 of Public Law 100–71, 5 U.S.C. Section 7301, and Executive Order No. 12564, establishes the scientific and technical guidelines for federal workplace drug testing programs and establishes standards for certification of laboratories engaged in drug testing for federal agencies.

Summary of the Major Provisions of the Proposed HMG

The promulgation of the HMG allows federal agencies to collect and test hair specimens in their workplace drug testing programs. The collection process provides that the specimen will be collected by a trained collector under direct observation. The HMG collection procedure requires that a single hair specimen be obtained from the donor's head and divided into two specimens (A and B). The collector places the A and B specimens into separate specimen collection containers. Unlike the Mandatory Guidelines for Federal Workplace Drug Testing Programs using Urine (UrMG), the HMG do not allow Instrumented Initial Test Facilities (IITFs), primarily because of the limited amount of hair collected from the donor.

The Department is proposing that an alternate authorized drug testing specimen be collected (*i.e.,* simultaneously collected or collected and tested at the direction of the MRO after verification of a positive hair test result). As described in greater detail below, this two-test approach is intended to protect federal workers from issues that have been identified as limitations of hair testing, and related legal deficiencies identified in *Jones* v. *City of Boston,* 845 F.3d 28 (1st Cir. 2016) and *Thompson* v. *Civil Service Com'n,* 90 Mass.App.Ct. 462 (Oct. 7, 2016). Both cases indicate that an employment action taken on the basis of a positive hair test alone, without other corroborating evidence, may be

vulnerable to legal challenge. The Department is specifically requesting comments, including support from recent peer-reviewed scientific literature, on advances in the science of hair testing that adequately address these limitations and elucidate the extent to which hair color, external contamination and other factors (*e.g.,* hair treatments, hygiene) will affect hair tests and the interpretation of hair drug test results. The Department will continue to monitor the science of hair testing and will carefully review peer-reviewed literature and other valid scientific information submitted by federal agencies and the public for scientific support of hair testing. Based on this evaluation, the Department will decide whether performance standards can be established to mitigate identified limitations and obviate the requirement to collect an alternate authorized specimen. The Department is also soliciting public comment on the potential added burden to federal agencies and specimen donors should an alternate specimen be necessary. As noted under *Executive Orders 13563 and 12866* in the Regulatory Impact and Notices section of this Notice, the Department does not find these proposed mandatory guidelines to be a significant burden for federal agencies or incur a significant cost. In addition, a federal agency is not required to adopt hair testing in their Drug-free Workplace Programs. However, comments provided by the public on the subject of potential added burden could be useful to federal agencies deciding whether to test hair in addition to other specimen types in their federal workplace drug testing programs.

In addition, the Department is specifically requesting comments, including support from the recent scientific literature, on whether hair tests that are positive for the marijuana analyte, delta-9-tetrahydrocannabinol-9-carboxylic acid (THCA), should be excluded from the requirement to test an alternate authorized specimen (*i.e.,* MROs would report verified positive THCA hair results to the federal agency).

Costs and Benefits

Using data obtained from the Federal Workplace Drug Testing Programs and HHS-certified laboratories, the Department estimates that 275,000 urine specimens are tested annually by federal agencies. HHS projects that approximately 1% (or 2,750) of the 275,000 specimens tested per year will be hair specimens and 89% (or 244,750) will be urine specimens, with the remaining approximately 10% being oral fluid specimens (27,500). The approximate annual numbers of regulated specimens for the Department of Transportation (DOT) and the Nuclear Regulatory Commission (NRC) are 6.1 million and 150,000, respectively. It should be noted that the NRC-related information in this notice only pertains to individuals subject to drug testing conducted pursuant to 10 CFR part 26, ''Fitness for Duty Programs'' (*i.e.,* employees of certain NRC-regulated entities). Should DOT and NRC allow hair testing in their regulated workplace programs, the estimated annual numbers of specimens for DOT would be 50% (3,050,000) hair specimens for pre-employment testing, 7% (427,000) oral fluid specimens, and 43% (2,623,000) urine specimens; and numbers of specimens for NRC would be 10% (15,000) hair, 7% (10,500) oral fluid, and 83% (124,500) urine. These projected numbers are based on existing annual pre-employment testing in the regulated industries and hair testing currently conducted in the private sector for commercial drivers.

An HHS-certified laboratory may group analytes for initial testing as shown in the table in Section 3.4 (*i.e.,* use a single test for two or more analytes that are in the same drug class and have the same initial test cutoff), or may use multiple tests. In Section 3.4, the Department is proposing criteria for calibrating initial tests for grouped analytes and is specifying the minimum cross-reactivity of the immunoassay to the non-target analytes(s) within the group (*i.e.,* those not used for calibration). An immunoassay manufacturer may incur costs if they choose to alter their existing product and resubmit the immunoassay for Food and Drug Administration (FDA) clearance.

Costs associated with hair testing are greater than for urine or oral fluid testing based on information from commercial laboratories currently testing hair specimens. Costs of initial testing will not pose a significant increase for laboratories currently testing hair if the laboratory can use currently available immunoassay testing kits cleared by the FDA for hair testing. All confirmatory testing can be achieved using commercially available instrumentation. Prior to testing regulated hair specimens, laboratories must be specifically certified for hair testing by the Department through the National Laboratory Certification Program (NLCP). Laboratories choosing to apply for HHS certification may incur additional costs associated with adding the matrix and/or validating and implementing assays using different cutoffs and analytes. The estimated laboratory cost to complete and submit a certification application is $3,000 and the estimated cost for the Department to process the application is $10,200. The initial HHS hair testing certification includes the requirement for the laboratory to demonstrate that their performance meets Guidelines analytical requirements by testing three (3) sets of performance testing (PT) hair samples. The Department will provide the three groups of PT samples through the NLCP at no cost to laboratories participating in the NLCP Pilot Proficiency Testing Program for hair. This pilot PT program is described in the History and Proposed Changes to the HHS Mandatory Guidelines for Federal Workplace Drug Testing Programs section below. Based on estimated fees charged for hair specimen testing, laboratory costs to conduct the PT testing would range from $3,000 to $3,375 for each applicant laboratory.

Based on information from current commercial hair testing laboratories, once hair testing is implemented, the average cost per specimen will range from $40.00 to $45.00. Information from current HHS-certified laboratories indicates that the average cost of testing a urine specimen ranges from approximately $6.50 to $11.00 per specimen. Once hair testing is implemented, the estimated cost per specimen for each initial test will range from $2.50 to $6.00 including costs for initial test reagents and sample preparation (*e.g.,* washing, digestion). Estimated additional costs for each confirmatory test will range from $20.00 to $35.00, primarily due to the costs of sample preparation (including decontamination procedures as defined in Section 1.5) and analysis. Therefore, the estimated cost of a commercial hair testing laboratory using both initial testing with confirmation will range from $40.00 to $80.00 per specimen. These costs for the laboratories or federal agencies choosing to use hair in their drug testing programs will be incorporated into the overall testing cost for the federal agency submitting the specimen to the laboratory.

As described earlier, a federal agency choosing to use hair for pre-employment and/or random testing may collect an alternate specimen type at the same collection event or later, at the direction of the MRO. Agencies choosing not to collect an alternate specimen at the same time as hair would save upfront collection and handling costs, and would pay for alternate specimen collection and testing only when directed by the MRO (*i.e.,* when the donor has no legitimate medical

explanation for a positive hair test, when the hair specimen was reported by the laboratory as invalid or rejected, or when the donor requests testing of the split specimen and the split specimen cannot be tested). A federal agency that chooses to collect an alternate specimen type at the same time as hair for a pre-employment or random test would incur additional upfront costs for collection and handling of the alternate specimen, but would only pay for testing of those alternate specimens when directed by the MRO, and would save time on recollection in those instances. Agencies choosing to use hair in their drug testing programs may also incur some costs for training of federal employees such as drug program coordinators.

As explained in more detail below, hair testing potentially offers several benefits when compared to urine, including directly observed collections, ease of transport and storage, increased specimen stability, and a longer window of drug detection. The Department believes these benefits justify pursuing hair testing in federal workplace programs.

Background

The Department of Health and Human Services, pursuant to the Department's authority under Section 503 of Public Law 100–71, 5 U.S.C. Section 7301, and Executive Order No. 12564, establishes the scientific and technical guidelines for federal workplace drug testing programs and establishes standards for certification of laboratories engaged in drug testing for federal agencies. As required, HHS originally published the Mandatory Guidelines for Federal Workplace Drug Testing Programs (Guidelines) in the **Federal Register** [FR] on April 11, 1988 [53 FR 11979]. The Substance Abuse and Mental Health Services Administration (SAMHSA) subsequently revised the Guidelines on June 9, 1994 [59 FR 29908], September 30, 1997 [62 FR 51118], November 13, 1998 [63 FR 63483], April 13, 2004 [69 FR 19644], and November 25, 2008 [73 FR 71858]. SAMHSA published the revised Mandatory Guidelines for Federal Workplace Drug Testing Programs using Urine (UrMG) on January 23, 2017 [82 FR 7920] and published the proposed Mandatory Guidelines for Federal Workplace Drug Testing Programs using Oral Fluid (OFMG) on May 15, 2015 [80 FR 28054].

On December 4, 2015, the President signed the Fixing America's Surface Transportation (FAST) Act, which required HHS to ''issue scientific and technical guidance for hair testing as a method of detecting the use of a controlled substance for purposes of section 31306 of title 49, United States Code.'' Public Law 114–94, section 5402(b).

History and Proposed Changes to the HHS Mandatory Guidelines for Federal Workplace Drug Testing Programs

A focus of the HHS mission is to maintain the integrity and ensure the quality of federal drug-free workplace programs by a commitment to identify and mandate the use of the most accurate, reliable drug tests and testing methods available. To accomplish these goals, the Department implements ongoing scientific reviews and program collaboration with federal regulators, researchers, drug testing laboratories, and public and private sector employers. As the use of alternative specimens (other than urine) and new analytical test technologies increased over the previous years, the Department, through SAMHSA's Center for Substance Abuse and Prevention (CSAP) Drug Testing Advisory Board (DTAB), responded by reviewing new technologies and assessing drug testing using other specimen types, such as oral fluid (saliva), hair, and sweat for possible use in federal agency workplace testing programs.

The proposed HMG are the result of a directed Departmental assessment that began in 1997 with a 3-day scientific meeting of the DTAB. During that public meeting, DTAB members discussed drug testing using alternative specimens and the use of new and developing drug testing technologies with potential applicability to workplace drug testing programs. Following the initial meeting, members of the DTAB continued to review and analyze all available information on alternative specimens and testing technologies. These efforts identified specific scientific, administrative, and procedural requirements necessary for a comprehensive federal workplace drug testing program that included alternative specimens and technologies.

The first working draft of new Guidelines that included the testing of alternative specimens including hair was presented at the June 2000 DTAB meeting. These ''work-in-progress'' draft Guidelines were placed on the SAMHSA website and the public was invited to submit information and comments to improve the draft document and further SAMHSA's knowledge of the analysis of alternative specimens. Twenty-eight separate comments were received. Those comments were summarized, incorporated into the draft Guidelines and the updated document was presented at the DTAB meeting in September 2000. Again, comments were requested from all interested parties. At the December 2000 DTAB meeting, a third working draft of the Guidelines was presented that included public comments resulting from the September meeting. SAMHSA, in consultation with subject matter experts including researchers and drug testing industry professionals, continued to assess the scientific supportability of testing alternative specimens in the Drug-Free Workplace Program (DFWP). Areas of specimen collection, specimen validity, initial testing, confirmation, medical review, and performance testing were examined to evaluate the integrity, reliability, and defensibility of drug testing using alternate matrices.

To assess laboratory performance and utility of alternative specimen testing in federal drug-free workplace programs, the Department initiated a voluntary pilot proficiency testing (PT) program for hair. The Hair Pilot PT program ran from 2000 to 2007 and resumed in 2014 based on DTAB's recommendation. The program was developed, and the samples were prepared using government funding. This pilot PT program was established to determine if it was possible to prepare stable and accurate hair PT samples, and to develop criteria for the PT program. Participating laboratories used their established procedures to test the PT samples and shared their results with SAMHSA. Based on data obtained from the pilot PT program, it appeared that valid and stable hair PT samples could be prepared. The results of the pilot PT program showed that the technology used by participant laboratories for confirmatory testing could meet requirements for sensitivity and specificity. Also, inter-laboratory precision improved during the pilot PT program for most drug analytes.

Based on the pilot PT results from 2000 to 2003 and input from subject matter experts for all alternate matrices, the Department issued a **Federal Register** notice [69 FR 19673] on April 13, 2004 proposing inclusion of oral fluid, hair, and sweat specimens in federal workplace drug testing programs. Following publication of the proposed Guidelines, the public and federal agencies identified significant scientific, legal, and public policy concerns about the use of the alternative specimens. As a result of the review, the Department issued a Final Notice of Revisions to the Mandatory Guidelines for Federal Workplace Drug Testing Programs on November 25, 2008 [73 FR 71858] that concluded the scientific, technical, and legal information for the

testing of alternative specimens (oral fluid, hair, and sweat) was insufficient to include these specimens in the federal programs at that time. As noted above, the purposes of the Hair Pilot PT Program were to determine if it was possible to prepare stable and accurate hair PT samples, and to develop criteria for the PT program. Many of the issues raised by commenters (*e.g.,* concerns over external contamination) were not addressed in the pilot PT program. The Department committed to monitoring developments in alternative specimen testing and has continued to do so since 2008.

The complexity of responses to the 2004 notice made it clear that if the Department were to subsequently authorize alternative specimens for the Mandatory Guidelines for Federal Workplace Drug Testing Programs, each specimen matrix would need a separate set of Guidelines. Additionally, the Department proposed to stagger the timeline for the review and potential incorporation of alternative specimens, and to begin with oral fluid. The decision to begin with oral fluid was supported by fewer legal and policy concerns, and current peer-reviewed literature that existed with oral fluid. The Department published the proposed OFMG on May 15, 2015 [80 FR 28054].

Since 2004, methodology developed for non-regulated private sector workplace alternate matrix testing has evolved, leading to enhanced analytical sensitivity and specificity for hair testing. The scientific literature for hair testing and interpretation of results has grown. Many non-regulated private sector organizations have incorporated hair testing into their workplace drug testing programs.

At the open session of the January 2012 DTAB meeting, SAMHSA shared updated information on hair testing with DTAB and the public. During the meeting, experts made scientific presentations concerning hair specimens for workplace drug testing, including physiological composition of hair, tested drugs and cutoffs, wash procedures, decontamination procedures, hair testing results and best practices in laboratory methodologies (initial and confirmatory testing). Wash procedures consisted of a rinse with organic solvents to remove oils and residue on the hair prior to initial testing. Decontamination procedures were more extensive methods (*e.g.,* multiple organic and aqueous washes) designed to remove drug present due to environmental contamination prior to confirmatory testing.

In May 2015, SAMHSA solicited comments regarding the science and practice of hair testing via a Request for Information (RFI) [80 FR 30689], and subsequently extended the due date for comments [80 FR 34921]. The notice requested comments from the public and industry stakeholders regarding a variety of hair testing issues (*e.g.,* specimens, collection, specimen preparation, analytes/cutoffs, specimen validity, and testing methods). The RFI gave the public and industry stakeholders an opportunity to provide information and comments for consideration during the development of the proposed Guidelines for hair testing. The Department received 37 comments from drug testing laboratories, MROs, manufacturers, drug testing industry associations, and the public. All submitted comments were reviewed and were presented to the DTAB members for consideration during SAMHSA's continuing assessment of hair as an alternative specimen.

Following the August 2015 meeting of the DTAB, the Board submitted the following recommendation to SAMHSA: ''Based on the review of the science, DTAB recommends that SAMHSA pursue hair as an alternative specimen in the Mandatory Guidelines for Federal Workplace Drug Testing Programs, including performance standards that sufficiently address external contamination and hair color impact.''

Thereafter, SAMHSA continued to critically review the state-of-the-science and technology for forensic drug testing of hair and the utility of hair as a specimen in federal workplace drug testing programs. SAMHSA also consulted subject matter experts with expertise in biochemistry, toxicology, laboratory operations, MRO practices and workplace policy. The input of these experts was considered along with Department officials at quarterly DTAB meetings.

Rationale for Pursuing Hair Testing in the Mandatory Guidelines for Federal Workplace Drug Testing Programs

Hair has been used in non-regulated testing programs including the transportation and casino industries (*i.e.,* for pre-employment and random testing), and other situations when longer detection periods may be needed. Corresponding developments have led to analytical technologies that provide the needed sensitivity and accuracy for testing hair specimens at the levels required to determine a positive test result, as demonstrated in the Hair Pilot PT Program.

Hair and urine pre-employment test results have been shown to be somewhat dissimilar because each matrix has a different time window of drug detection. Typically, positivity rates are higher in hair due to hair's longer window of detection.[1] Hair is easily collected, transported and stored, and is also more difficult to substitute and/or adulterate than urine since collections are performed under direct observation. Separation, detection, and identification techniques have improved such that scientists are now able to detect and quantify drugs and/or metabolites in hair at picogram per milligram (pg/mg) concentrations. A forensic workplace testing program for hair can be modeled after the existing federal program: Specimens are first tested using an initial test (*e.g.,* immunoassay or an alternate technology), and specimens with positive initial test results are confirmed using mass spectrometric identification.

What is hair?

Unlike urine and oral fluid, hair is a solid, heterogenous matrix that is exposed to the environment. Hair color and structure differ by individual and within the same individual. Hair consists of a hair follicle and hair shaft. At the base of the follicle (bulb) are highly vascularized matrix cells. As matrix cells in the dermis of the skin move outward during growth, they form layers of a hair shaft that include the outer protectant cuticle, central cortex and inner medulla. Hair grows in three stages: About 85 percent of hair follicles in the posterior vertex region of the head are in active growth phase (anagen), while the others are in a transition phase (catagen) before the resting phase (telogen). At the vertex region of the scalp, the average growth rate of hair is about 0.4 millimeters per day or approximately 1 centimeter per month.[2–5] The Department is proposing to permit agencies as part of their federal drug-free workplace programs to test head hair specimens between 0.5 and 1.0 inches (approximately 2.5 cm) long, representing a detection time period of approximately 30–60 days, for pre-employment and random testing.

What is the mechanism of drug disposition in hair?

Drugs and drug metabolites may be incorporated into hair by several pathways.[6–10] As drugs and their metabolites travel through the body in blood, they diffuse from the bloodstream into the base of the hair follicle. The amount of drug in the hair is related to the drug concentration in the blood when the hair was formed and depends on the chemical structure of the drug or metabolite. Drugs and/or metabolites may also be incorporated

into hair via secretions of the sweat glands and sebaceous glands, which are in close contact with hair as it develops and emerges from the skin. Sweat and sebum can deposit drugs and/or metabolites on the hair shaft that are absorbed into the hair during and after its formation. As hair grows and emerges from the skin, the location of drug and metabolite in the hair shaft can be used to generally assess the timeframe of drug use. However, sweat can contribute to drug and/or metabolite incorporation across the entire length of the hair. Therefore, segmental analysis (*i.e.,* analysis of multiple short longitudinal segments to determine a time profile of use) must be done with caution and is not recommended for workplace drug testing. [6–10]

What are some of the known issues with drug testing using hair?

Numerous factors influence the amount of drug incorporated into hair (*e.g.,* drug dose, length of exposure, physical and chemical properties of hair, and factors associated with the chemical structure of the drug). Of concern are environmental contamination, the impact of natural hair color on drug incorporation, and the effects of hygiene and cosmetic hair treatments. These issues may confound the results and interpretation of hair tests as explained in more detail below.

Environmental Contamination and Decontamination

Concerns have been raised over environmental contamination of hair.[2 4 11–15] There can be opportunities for hair to be contaminated from drugs in the environment.[14] For example, a donor may claim they tested positive for a drug because they were in the presence of others using the drug, or were in an environment in which drug particulates were in the air or on contaminated surfaces.

Effective decontamination procedures are a key issue in hair testing, because the inability to rule out external contamination presents legal challenges. In one relevant case, a state court upheld a state commission's finding that hair testing did not adequately rule out the possibility of a false positive drug test resulting from external contamination such that an employer could rely on hair testing as the sole basis for an employee's termination. *See Thompson* v. *Civil Service Com'n,* 90 Mass.App.Ct. 462 (Oct. 7, 2016). Notably, the court in *Thompson* v. *Civil Service Com'n* stated the following regarding the reliability of hair testing:

> A threshold issue before the commission was the scientific reliability of the hair testing, and its ability to distinguish between voluntary ingestion and environmental exposure. The ten officers and the department held competing views as to whether the testing alone was reliable enough to establish just cause supporting the officers' terminations . . . . Ultimately, the commission found that the hair testing methodology was not sufficiently reliable to be the sole basis for an officer's termination, concluding that ''[a] reported positive test result . . . is not necessarily conclusive of ingestion and, depending on the preponderance of evidence in a particular case, may or may not justify termination or other appropriate discipline of a tenured [department] officer.'' Nonetheless, the commission found that hair testing is an appropriate tool to enforce the department's substance abuse policy and that hair test results could be used as *some* evidence of drug use.

Id. at 465—466 (internal citations omitted) (emphasis added). The Thompson court also stated that:

> Here, after an exhaustive inquiry on the scientific reliability of the . . . hair testing methodology, the commission reached the conclusion that a positive test was not conclusive on the question of voluntary ingestion, as the positive test may also represent sample contamination by environmental exposure. In other words, the commission found that the risk of a false positive test was great enough to require additional evidence to terminate an officer for just cause. That conclusion is well supported by the record, which includes evidence of shifting cutoff levels through the years since the testing had been implemented, a lack of general acceptance in the scientific and law enforcement communities, and a lack of universally recognized industry standards.

Id. at 467—468. The *Thompson* court went on to hold that, ''the evidence amply supported the commission decision.'' *Id.* at 470.

Many laboratories use wash procedures to remove oils and residue on the hair prior to initial testing. Approximately 90% of specimens are negative upon initial testing, and are subsequently reported negative.[16] Depending upon the analyte, external contamination is of the most concern for the remaining 10% of hair specimens submitted for confirmation testing. Therefore, some laboratories use decontamination procedures designed to remove drug present due to environmental contamination prior to performing confirmatory testing.

Decontamination procedures that adequately remove externally deposited drug and drug metabolites prior to confirmation testing are the subject of much scientific inquiry. It is likely that hair from individuals who use drugs is also externally contaminated.[6 17] In other words, drugs and some drug metabolites (*e.g.,* benzoylecgonine) detected during testing of a drug user's hair can be from drug ingestion and/or external contamination. This is mainly because of drug users' exposure to drugs in their environment as well as drugs and/or metabolites in the individual's own sweat and sebum coming into contact with their hair.

A variety of decontamination procedures have been reported in the literature with varying effectiveness.[11–13] Decontamination procedures employing multiple washes with analysis of the final wash solution may be a useful tool to identify external contamination.[11 12 15] However, it has been shown that some externally deposited drug may remain, even after extensive washing.[11] To address this issue, some laboratories have developed procedures employing a wash ''factor'' for some drugs (*e.g.,* cocaine), whereby the concentration of the final wash solution is multiplied by a factor to simulate the effect of additional washes and the product is subtracted from the concentration of the drug measured in the hair.[12] The factor used in these calculations varies and is dependent upon the drug and the laboratory. For some drugs (*e.g.,* cocaine), the factor alone was not found to be effective at discriminating external contamination from drug use, so laboratories have employed additional criteria (*e.g.,* presence of multiple metabolites, metabolite to parent drug ratios).[12] One study proposed using a wash-to-hair concentration ratio to designate results as either indicative of drug use, indicative of drug use in combination with external contamination or indicative that the source of the drug was external contamination and inconclusive as to drug use.[15] In that study, 11% of all test results had ratios indicative of external contamination and inconclusive for drug use. While the use of wash factors or ratios has shown promise in mitigating the effect of external contamination on hair drug testing, the Department is not proposing that such procedures be used in federal agency testing programs, in part because of the difficulty in development of performance testing samples to assess their effectiveness in the certified laboratories.

Laboratories that have researched the validity and efficacy of decontamination procedures recommend utilizing aqueous and organic solvents in these decontamination procedures.[11] Both the Society of Hair Testing and United Nations Office of Drugs and Crime recommend a hair decontamination procedure that includes both an organic and aqueous washing step, whereas the European Workplace Drug Testing

Society recommends an organic and/or aqueous wash. The proposed inclusion of both organic and aqueous solvent wash steps is in accordance with current peer reviewed literature. As opposed to requiring a single method for decontamination to be used by all testing laboratories, SAMHSA proposes that minimum performance standards be established for the efficacy of decontamination procedures that are followed in all HHS-certified hair drug testing laboratories.

However, although there is scientific evidence that suggests that wash and decontamination procedures may be effective in ensuring that the outer protectant cuticle and inner medulla portions of the hair shaft are decontaminated, there are no published studies that prove that external contamination cannot reach the central cortex of the hair. Further, one published study concludes that drug-contaminated hair when washed with water and methanol is indistinguishable from drug user hair because the drug migrates into the cortex and medulla due to swelling effects of these solvents.[13] If this issue is not addressed, a donor may claim that, even if hair is washed and decontaminated in accordance with the most vigorous washing methodologies utilized by laboratories, a hair test result could remain influenced by contamination and potentially result in a false positive test. Therefore, more time and research are needed for the development of performance standards that address this and other issues. The Department is currently in the process of developing performance standards for decontamination of hair and is seeking public comment on what such standards should be and how performance test samples could be developed to assess these standards. When the decontamination performance standards are fully developed, it is the Department's intention to add them to the HMG through the notice and comment process rather than delay publishing of the proposed HMG until such standards are developed. Compliance with these mandatory minimum standards, when fully developed and included in these Guidelines, will be evaluated through the NLCP Performance Testing (PT) program.

After relevant performance testing standards are developed, the HMG require laboratories to perform a valid and effective decontamination procedure prior to confirmatory drug testing in order to address the external contamination issue. The Department is requesting comments and information about decontamination procedures that remove drug present as a result of external contamination. All decontamination and test methods must meet the validation, quality control, and review requirements specified by the HMG. Furthermore, the NLCP Performance Testing (PT) program would challenge those methods using drug user hair, hair contaminated with drug analytes, hair subjected to cosmetic treatments, and blind quality controls. The laboratories will also be required to prepare decontamination controls that challenge their decontamination procedures and are analyzed with each confirmatory drug analysis. The Department is specifically requesting comments on the types of samples to be included in the hair PT program and procedures used to prepare decontamination controls.

Identification of Unique Metabolites

Identification of a unique drug metabolite would distinguish drug use from environmental contamination as long as strict criteria for defining a unique metabolite are established.[11] The proposed HMG define a unique metabolite as ''a drug metabolite present in a hair specimen only as a result of biotransformation following drug use'' and which ''does not occur as a contaminant in licit and illicit drug products and is not produced from the drug as an artifact.''

To date, only one unique metabolite (*i.e.,* THCA) meets the above definition and has been included for the proposed drugs. However, while the use of a unique metabolite addresses the external contamination issue, the Department is not aware of any controlled dosing studies that demonstrate the lack of a hair color impact on THCA results. See additional discussion on the impact of hair color on hair test results below. Accordingly, the Department is requesting comments including support from the scientific literature on whether THCA positive hair tests can be excluded from the requirement to test an alternate authorized specimen (*i.e.,* MROs would report verified positive THCA hair results to the federal agency).

The Department is also requesting information including, at a minimum, support from the scientific literature about unique metabolites that can be analyzed on a stand-alone basis for the other proposed drugs listed in Section 3.4. For example, one recent study analyzing opioids in hair indicates that unique glucuronide metabolites of opioid drugs may be reliably detected in hair.[18] In addition, although hydroxylated metabolites of cocaine and benzoylecgonine do not meet the Guidelines definition of a unique metabolite for hair, these analytes have been touted in the literature as being diagnostic of cocaine use when ratio criteria are applied to the quantitative results.[12 19–22] Hydroxy-metabolites of cocaine were originally thought to be unique metabolites as defined in the HMG, until these compounds were identified in street cocaine samples and found to be produced during hair treatment experiments.[21 22] More recently, hydroxy-metabolites of benzoylecgonine were identified in hair and thought to represent a new opportunity to reliably identify cocaine use.[19–21] However, these analytes also have been detected in a limited study of street cocaine samples, and were found to form and increase in concentration over a period of eight weeks after contamination of seven subjects' hair with cocaine.[20] To compensate for these issues, researchers have proposed the use of ratios and criteria schemes (*i.e.,* detection of multiple metabolites at or above proposed cutoff concentrations and within certain ratios to each other).[20 21] These schemes require the analysis of cocaine and multiple hydroxylated metabolites to be effective, thereby increasing the costs of testing and the NLCP performance testing used to monitor the accuracy and reliability of laboratory results.

Impact of Hair Color on Hair Test Results

The natural color of human hair ranges from shades of black, brown, red, yellow, gray and white. Hair color is controlled, in part, by the biochemistry of two major groups of melanin pigments. The eumelanins are black to brown and the pheomelanins are reddish in color.[23] The presence of eumelanin appears to be the major determinant of drug binding and incorporation of drug into the hair shaft. One of the postulated mechanisms for drug uptake in hair is ionic binding of drugs containing basic nitrogen moieties in their molecular structure (*e.g.,* amphetamines, cocaine, opioids, and phencyclidine) with melanins.[24] Neutral and acidic drugs appear to bind to hair by other poorly understood means. Direct evidence of binding of various drugs with melanin and with human hair has been demonstrated.[25–27] In one *in vitro* study, cocaine binding experiments with black, brown, and blonde human hair demonstrated up to 34-fold differences in cocaine binding with dark hair as compared to blonde hair.[26] These findings have raised concerns that selective drug binding with the wide variation of color

pigments distributed amongst the population may introduce bias in drug test results.

A number of laboratory animal studies indicate that some drugs are differentially incorporated into hair based on color. Following administration of the same dose, higher drug concentrations were demonstrated in dark hair versus light hair in animals administered amphetamine,[28] methamphetamine,[29] methadone,[30] and phencyclidine.[31] Several controlled dosing studies in humans are consistent with the findings in animals.

In one human study, administration of the same dose of isotopically labeled cocaine to Caucasians (hair color primarily brown) and non-Caucasians (hair color primarily black) resulted in approximately 2.7 times more cocaine being incorporated into non-Caucasian hair than Caucasian hair.[32] In another study, codeine was administered to male and female participants with black (Caucasians, non-Caucasian, American Indian, Hispanic, Asian), brown (Caucasians), blond (Caucasians) and red hair (Caucasians).[33] Codeine concentrations in black hair were seven-fold higher than those in brown hair and 14–15-fold higher than those in blond hair. Using the proposed confirmatory cutoff of 200 pg/mg, 100% of subjects with black hair and 50% subjects with brown hair in this study would have been reported as positive. In contrast, subjects with blond or red hair would have tested negative. The authors suggested a direct relationship between codeine concentration and melanin concentration in hair. In another study of codeine administration to participants with different hair colors, a strong correlation was observed between codeine concentrations in hair and melanin concentrations.[34]

Some of these investigators conducting controlled drug dosing studies measured melanin pigments as well as the amount of drug incorporation in hair and suggested that normalization of drug concentration to pigment content would effectively reduce potential bias in test results.[33 34]

However, it remains unclear how the effect of pigmentation differences on drug amount in hair translates to a broader population as a whole, given the many other sources of variability (*e.g.,* individual differences in amount and frequency of drug use and rates of drug metabolism and disposition). Epidemiology studies have suggested no significant hair color impact exists for THCA,[35] heroin, cocaine, and amphetamines.[36] The THCA result is consistent with studies of other acidic and neutral drugs and metabolites in hair. However, the Department is unaware of any controlled dosing studies that evaluated THCA in hair and therefore without this objective data the question of whether THCA exhibits a hair color impact remains. As noted earlier, the Department is requesting comments including support from the recent scientific literature on whether THCA positive hair tests should be excluded from the requirement to test an alternate authorized specimen (*i.e.,* MROs would report verified positive THCA hair results to the federal agency). It is unknown for the other drugs whether the absence of an objective and scientific measure of hair color and differences in how hair color was categorized between these epidemiological and controlled human dosing studies played a role in the lack of concordance in results. Another study found that black arrestees tested positive for cocaine more often than white arrestees in both urine and hair.[37] The authors suggested that, given the consistency between self-reported cocaine use and test outcome, there was no bias in the hair or urine tests based on racial group. A recent prepublication article by researchers from the University of Arkansas was provided to the Department for review. Similar to the Mieczkowski studies referenced above, the article attempts to consider hair pigmentation difference by dividing donors into ethnic groups and comparing urine and hair specimen testing results. The authors suggest that ethnic groups are significantly different irrespective of testing procedure. As noted, the Department wishes to solicit feedback on scientific studies comparing drug results and hair color and results comparing urine to hair.

In addition, *in vitro* binding studies, animal studies, and controlled human dosing studies for certain drug classes (*i.e.,* amphetamines, cocaine, opioids, and phencyclidine) provide scientific evidence that melanin pigments may influence the amount of drug incorporated into hair. However, it is unclear whether this influence would lead to significant bias in different populations of workers undergoing drug tests, given variabilities described herein, that could be introduced into test results from other sources and within the time frame of 30–60 days based on a 0.5 to 1.0 inch hair test. The Department is requesting information, including support from the recent scientific literature to address the impact of hair color on drug test results.

The hair color impact/bias issue also presents legal challenges. It should be highlighted in this regard that the United States Court of Appeals for the First Circuit found that certain African-American police officers who were terminated from their positions on the basis of hair testing results were able to prove a ''prima facie case of disparate impact under Title VII.'' *See Jones* v. *City of Boston,* 752 F.3d 38, 60 (1st Cir. 2014).) The First Circuit reiterated this finding in a subsequent 2016 proceeding and remanded the matter to the district court for further proceedings on the remaining prongs of the disparate impact analysis. *See Jones* v. *City of Boston,* 845 F.3d 28 (1st Cir. 2016). The First Circuit held that:

> [t]he record contains sufficient evidence from which a reasonable factfinder could conclude that hair testing plus a follow-up series of random urinalysis tests for those few officers who tested positive on the hair test would have been as accurate as the hair test alone at detecting the non-presence of cocaine metabolites while simultaneously yielding a smaller share of false positives in a manner that would have reduced the disparate impact of the hair test. We also think that, on the present record, a reasonable factfinder could conclude that the [Boston Police] Department in 2003 refused to adopt this alternative.

Jones v. *City of Boston,* 845 F.3d 28, 38 (1st Cir. 2016).

Thus, the First Circuit characterized ''a follow-up series of random urinalysis tests'' for officers who tested positive using hair as being just ''as accurate as the hair test alone at detecting the non-presence of cocaine metabolites while simultaneously yielding a smaller share of false positives in a manner that would have reduced the disparate impact of the hair test.'' *Id.* Accordingly, the Department is proposing to include testing using an alternate specimen when directed by the MRO for individuals who test positive on a hair test, unless the donor has a legitimate medical explanation for the positive test or the MRO has corroborating evidence to support the positive hair test (*i.e.,* donor admission of illicit drug use). In addition, testing of an alternative matrix could also prove to be an effective measure to mitigate the external contamination issue because it would supply additional evidence to support an adverse action when premised on a positive drug test, which the *Thompson* court found to be needed when hair specimens are used for drug testing. As noted earlier, the Department is specifically requesting comments, including support from recent peer-reviewed scientific literature, on advances in the science of hair testing that may mitigate the requirement for an alternate authorized specimen in place of a donor's positive hair specimen in certain circumstances. The Department

is also seeking comments from the public on the potential for added burden should the alternate specimen requirement be necessary. Specifically, the Department is soliciting comments on potential burden that this approach could place on the federal agency employers and specimen donors. Information from the public could be useful to federal agencies evaluating hair testing as compared to using urine or oral fluid testing in their workplace drug testing programs.

Effects of Cosmetic Hair Treatments

Hair treatments such as bleaching, straightening, relaxing, frequent washing, and vigorous brushing may; (1) decrease the hair concentrations of incorporated drug, (2) have effects that are drug, metabolite, target marker and profile dependent, and (3) because of the physical and chemical damage caused by these processes, they may increase the susceptibility of the hair to environmental contamination.[38–42] The Department is proposing that each laboratory have a scientifically validated method to identify hair that has been damaged to the extent a drug test may be affected. One method for identification of damaged or porous hair has been published in the scientific literature but further information on this topic is needed.[43] Therefore, the Department is requesting information including, at a minimum, support from the scientific literature to address these issues. Examples of requested information might include published scientific studies, internal laboratory study procedures or protocols, or reviews conducted by outside stakeholders to identify damaged hair. The Department is also requesting comments on whether this testing should be performed routinely on all specimens, or only on certain specimens (*e.g.,* based on initial test results). The Department is also seeking comment on the extent to which (based upon scientific studies) hair specimens can be impacted by hair treatments and whether such specimens should be reported as invalid and an alternate specimen be collected and tested.

Rationale for Hair for Pre-Employment and Random Testing

The Department is proposing the use of hair for pre-employment and random drug testing. Because drugs/metabolites are not detected in hair for 5 to 7 days after ingestion, it is not an appropriate specimen to detect recent use. Thus, hair is not an appropriate specimen for post-accident and reasonable suspicion testing. The Department is requesting comments on whether hair may be used for follow-up or return to duty testing.

How were analytes and cutoffs selected?

The selection of analytes for testing was based on known drug disposition patterns in hair. Analytes for the regulated drugs tested in hair are marijuana metabolite (delta-9-tetrahydrocannabinol-9-carboxylic acid, THCA), cocaine (parent drug and metabolite, benzoylecgonine), phencyclidine (PCP), opioids (codeine, morphine, hydrocodone, hydromorphone, oxycodone, oxymorphone), heroin metabolite (6-acetylmorphine, 6–AM), and amphetamines (amphetamine, methamphetamine, methylenedioxymethamphetamine [MDMA], and methylenedioxyamphetamine [MDA]).

Cutoffs were based on those proposed by the Department in 2004 (69 FR 19673). The Department has added the same prescription opioids (*i.e.,* hydrocodone, hydromorphone, oxycodone, and oxymorphone) specified in the UrMG and OFMG, with the same hair cutoffs as proposed for codeine and morphine. The codeine and morphine cutoffs are consistent with those recommended by the European Workplace Drug Testing Society and the Society of Hair Testing.[44 45]

Will there be specimen validity tests for hair?

The Department is not aware of any objective methods in use to assess hair specimen validity (*e.g.,* to distinguish synthetic from human hair or to identify hair that has been damaged to the extent a drug test result may be affected). As noted earlier, the Department is proposing that each laboratory use a validated method to identify damaged hair; therefore, the Department is seeking information on such methods and comments on whether all or only certain hair specimens should be subjected to such testing. The Department is also seeking comments on whether other validity testing is necessary for hair and, if so, what tests could be used.

National Laboratory Certification Program (NLCP)

The functions of the National Laboratory Certification Program include maintaining laboratory inspection and PT programs as described in these Guidelines. Activities within these functions also include, but are not limited to, reviewing inspection reports and PT results, preparing summary reports of inspection and PT results, and making decisions regarding laboratory certification, suspension or revocation.

Organization of Proposed Guidelines

This preamble describes the differences between the UrMG and the proposed HMG. In addition, it provides the rationale for the differences between the two Guidelines. The preamble also presents a number of issues raised during the development of the HMG. These issues are presented first in summary form as they appear in the proposed HMG and second as issues for which the Department is seeking specific public comment.

References to Instrumented Initial Test Facilities (IITFs) have been removed in multiple sections, because IITFs are not practical for hair testing and will not be allowed to test hair specimens (see discussion under Subpart L, section 12.1 below).

Subpart A—Applicability

Section 1.1 contains the same policies as described in the UrMG regarding who is covered by the Guidelines, except that instrumented initial test facilities will not be allowed to test hair specimens.

Sections 1.2, 1.3, and 1.4 contain the same policies as described in the UrMG regarding who is responsible for the development and implementation of the Guidelines, how a federal agency requests a change from these Guidelines, and how these Guidelines are revised.

In Section 1.5, where terms are defined, the Department proposes to add terms that apply specifically to hair (*e.g.,* artificial hair, false hair, wash procedures, decontamination, unique metabolite).

Section 1.6 contains the same policies as described in the UrMG regarding what an agency is required to do to protect federal applicant and employee records.

Section 1.7 contains the conditions that constitute a refusal to take a federally regulated drug test. The Department has removed UrMG items that are not applicable to hair (*e.g.,* situations involving observed or monitored urine collections) and is proposing conditions specific to hair. For example, in the event a donor is unable to provide a sufficient amount of hair for faith-based or medical reasons, or due to an insufficient amount or length of hair, the federal agency would be required to collect another authorized specimen type (*e.g.,* urine, oral fluid). In addition, the Department is proposing in Section 8.4 that the collector ask the donor whether the donor is wearing false hair (*i.e.,* artificial or natural hair that is not the donor's

own such as a wig, weave, or extensions). If the donor states that they are wearing false hair, or the collector otherwise identifies its presence, this does not constitute a refusal to test. If the collector can collect a sufficient amount of the donor's own hair, the collector will proceed with the hair test. If the donor is unable to provide a sufficient amount of hair because of the false hair or for faith-based or medical reasons, or due to an insufficient amount or length of hair, the collector will collect an alternate authorized specimen.

Section 1.8 contains the same policies as described in the UrMG with regard to the consequences of a refusal to take a federally regulated drug test.

Subpart B—Hair Specimen

In section 2.1, the Department proposes to expand the drug testing program for federal agencies to permit the use of hair specimens. There is no requirement for federal agencies to use hair as part of their program. A federal agency may choose to use urine, oral fluid, hair, or any combination of authorized specimen types in their drug testing program. However, any agency choosing to use hair is required to follow the HMG. For example, for pre-employment or random drug tests, an agency program can randomly assign individuals for urine, oral fluid, or hair collection. The Department is proposing to allow federal agencies the option to collect an alternate authorized specimen (*e.g.,* urine, oral fluid) either: (1) At the same time as the hair specimen or (2) at the direction of the MRO, following verification of a hair test as positive or invalid, or when the laboratory rejected the hair specimen. Under both options, the MRO would direct testing of the alternate specimen after completing the review and verification of the hair test results. Under these procedures, MROs would only be authorized to report a positive result for a hair test when the donor admits illicit use of the drug(s) that caused the positive test. To be clear, the results of a positive hair test cannot be reported to a federal agency without this corroborating evidence to support the positive test result. This hair testing approach best addresses the current disparate impact and external contamination legal issues discussed in the *Jones* v. *City of Boston* and *Thompson* v. *Civil Service Com'n.* cases. As noted earlier, the Department is specifically requesting comments including support from the scientific literature on advances in the science of hair testing that address these issues and obviate the need for the alternate specimen collection, as well as whether THCA should be excluded from this requirement (*i.e.,* MROs would report verified positive THCA hair results to the federal agency). In the event a donor was unable to provide a sufficient amount of head hair for faith-based or medical reasons, or due to an insufficient amount or length of hair, the federal agency would be required to collect an alternate authorized specimen.

Section 2.2 describes the circumstances under which a hair specimen may be collected. The Department proposes that hair tests be used in the pre-employment and random drug testing contexts only. Because drug analytes do not appear in hair for 5–7 days after use, hair is not an appropriate specimen to detect recent use. The Department is proposing to allow hair testing for pre-employment and random testing, and is requesting comments on whether hair may be used for follow-up or return to duty testing. In addition, due to different growth rates and drug detection windows based on the location of hair on the body, as well as privacy concerns, the Department is proposing to limit collection to head hair only and require federal agencies to authorize another specimen type for collection when head hair cannot be collected.

Section 2.3 describes how each hair specimen is collected for testing. This section is consistent with the established requirement for all specimens to be collected as a split specimen. The Department proposes that the collector subdivide the collected hair specimen into the primary (A) and split (B) specimens.

Section 2.4 establishes the amount of hair that must be collected for each specimen.

Section 2.5 describes how a hair specimen is split.

Section 2.6 includes the same requirement as the UrMG, that all entities and individuals identified in Section 1.1 of these Guidelines are prohibited from releasing specimens collected under the federal workplace drug testing program to any individual or entity unless expressly authorized by these Guidelines or in accordance with applicable federal law.

While the HMG do not authorize the release of specimens, or portions thereof, to donors, the Guidelines afford donors a variety of protections that ensure the identity, security and integrity of their specimens from the time of collection through final disposition of the specimen. There are also procedures that allow donors to request the retesting of their specimen (for drugs or adulteration) at a different certified laboratory. Furthermore, the Guidelines grant donors access to a wide variety of information and records related to the testing of their specimens, including a documentation package that includes, among other items, a copy of the Federal Custody and Control Form (CCF) with any attachments, internal chain of custody records for the specimen, and any memoranda generated by the laboratory regarding the donor's drug test.

Therefore, the procedures in these Guidelines offer federal employees and federal agencies transparent and definitive evidence of a specimen's identity, security, control and chain of custody. However, the Guidelines do not entitle employees to access the specimen itself or a portion thereof. The reason for this prohibition is that specimens collected under the Guidelines are for the purpose of drug testing only. They are not intended or designed to be used for other purposes such as deoxyribonucleic acid (DNA) testing. Furthermore, conducting additional testing outside the parameters of the Guidelines would not guarantee incorporation of the safeguards, quality control protocols, and the exacting scientific standards developed under the Guidelines to ensure the security, reliability and accuracy of the drug testing process.

Subpart C—Hair Specimen Tests

Section 3.1 describes the tests to be performed on each hair specimen. This is the same policy that is in the UrMG regarding which drug tests must be performed on a specimen. A federal agency is required to test all specimens for marijuana and cocaine and is authorized to also test specimens for opioids, amphetamines, and phencyclidine. The Department realizes that most federal agencies typically test for all five drug classes authorized by the existing Guidelines, but has not made this a mandatory requirement, and will continue to rely on the individual agencies and departments to determine their testing needs above the required minimum. The Department is not aware of any currently used hair tests for a biomarker or specific adulterant. However, the HMG authorize specimen validity testing (*e.g.,* for a biomarker, for a specific adulterant) upon request of the MRO as is allowed in the URMG. All tests must be properly validated and include appropriate quality control samples in accordance with these Guidelines. Specimen validity testing methods must be reviewed and approved by SAMHSA prior to use with federally regulated specimens. The Department is seeking comments on

whether validity testing is necessary for hair and, if so, what tests could be used.

The policy in Section 3.2 does not differ from that for urine testing in that an agency may test a donor's hair specimen for additional drugs on a case-by-case basis. For reasons outlined above, hair may be used for pre-employment and random testing purposes but cannot be used for other reasons (*e.g.,* reasonable suspicion and post-accident testing). A federal agency must consider collecting another authorized specimen type (*e.g.,* urine or oral fluid) in such cases.

The Department has included the same policy as the UrMG for a federal agency that wishes to routinely test its specimens for any drug not included in the Guidelines, in that the agency must obtain approval from the Department before expanding its program. The HHS-certified laboratory performing such additional testing must validate the test methods and meet the quality control requirements as described in the Guidelines for the other drug analyses.

Section 3.3 states that specimens must only be tested for drugs and to determine their validity in accordance with Subpart C of these Guidelines. Additional explanation is provided above, in the description of Section 2.6.

The table in Section 3.4 lists the proposed analytes and cutoff concentrations for hair. Most of the analytes and cutoffs are the same as those proposed in 2004. The Department has added the same prescription opioids (*i.e.,* hydrocodone, hydromorphone, oxycodone, and oxymorphone) as the UrMG, with the same hair cutoffs as codeine and morphine. The codeine and morphine cutoffs are consistent with those recommended by the European Workplace Drug Testing Society and the Society of Hair Testing.[44 45] The Department is specifically requesting comments on the appropriateness of these analytes and cutoffs.

Due to issues of possible external contamination and possible concerns of hair color impact, SAMHSA is continuing to evaluate standards regarding these issues. The Department is soliciting comments, with supporting scientific information, on unique metabolites as defined in these Guidelines that show use, or ingestion, of a drug, thereby eliminating external contamination as a concern.

Other footnotes in the Section 3.4 table include the same calibration and immunoassay cross-reactivity requirements as the UrMG for the initial tests. This includes the requirement for a laboratory to use the confirmatory test cutoff as the cutoff for an alternate technology initial test that is specific for THCA. Immunoassays for cannabinoids react with multiple compounds that may be incorporated into hair as a result of marijuana use. Therefore, it is necessary to use an immunoassay cutoff higher than that of the confirmatory test in order to detect the target analyte (THCA) at or above the confirmatory test cutoff. An initial test using an alternate technology with specificity comparable to the confirmatory test requires use of the confirmatory test cutoff.

Section 3.5 has the same policy as the UrMG regarding additional tests to provide information that the MRO would use to report a verified drug test result. HHS-certified laboratories are authorized to perform additional tests upon MRO request on a case-by-case basis, but are not authorized to routinely perform such tests without prior authorization from the Secretary or designated HHS representative, with the exception of the determination of D, L stereoisomers of amphetamine and methamphetamine. The Department is requesting comments including supporting data from the scientific literature on specimen validity tests and tests for additional analytes (*e.g.,* metabolites) that may be performed on a case-by-case basis or routinely upon MRO request.

Section 3.6 includes criteria for reporting a hair specimen as adulterated. While there are no known hair adulterants at this time, the Department is proposing to establish criteria similar to that for urine specimens, to ensure procedures that are forensically acceptable and scientifically sound, while allowing laboratories the flexibility necessary to develop specific testing requirements for an adulterant.

Section 3.7 includes criteria applicable for reporting a hair specimen as substituted (*i.e.,* the laboratory has identified physical or chemical characteristics inconsistent with human hair).

Section 3.8 incorporates criteria from the UrMG that are applicable for reporting an invalid result for a hair specimen and includes additional criteria specific for hair specimens. As noted previously, the Department is proposing that laboratories subject each confirmatory drug test specimen to a validated and effective decontamination procedure prior to testing for the confirmatory test analyte(s) listed in Section 3.4. If a laboratory has used its validated decontamination procedure for a specimen with a positive confirmatory drug test and was unable to distinguish external contamination from drug ingestion based on its test results, the laboratory would report the specimen as invalid. Additionally, a hair specimen may be damaged to the extent that the drug test is invalid (*i.e.,* the damaged hair is susceptible to incorporation of drug from external contamination or to loss of incorporated drug). Therefore, the Department is also proposing that each laboratory use a validated specimen validity test to identify damaged specimens and report specimens as invalid when the damage may affect the drug test result. The Department is requesting comments on whether testing for hair damage should be routinely performed on all specimens or only on certain specimens (*e.g.,* based on initial test results).

Subpart D—Collectors

Sections 4.1 through 4.5 contain the same policies as described in the UrMG regarding who may or may not collect a specimen, the requirements to be a collector, the requirements to be a trainer for collectors, and what a federal agency must do before a collector is permitted to collect a specimen.

Subpart E—Collection Sites

Sections 5.1 through 5.6 address requirements for collection sites, collection site records, how a collector ensures the security and integrity of a specimen at the collection site, and the privacy requirements when collecting a specimen. These are the same requirements as in the UrMG.

Subpart F—Federal Drug Testing Custody and Control Form

Sections 6.1 and 6.2 are the same as in the UrMG, requiring the OMB-approved Federal CCF be used to document custody and control of each specimen at the collection site, and specifying what should occur if the correct OMB-approved CCF is not used.

Subpart G—Hair Specimen Collection Materials

Section 7.1 describes the collection materials that must be used to collect a hair specimen. The Department is proposing that either single-use or reusable scissors may be used to cut the hair. If reusable scissors are used, the collector must use an individually packaged isopropyl alcohol wipe to clean the scissors in the presence of the donor. Materials also must include two specimen guides, as defined in Section 1.5, and two sealable collection containers for the A and B specimens.

Section 7.2 describes specific requirements for the hair collection materials, to maintain the integrity of the specimen. All collection materials that come into contact with the hair

must not substantially affect the composition of drug and/or drug metabolites in the specimen. The specimen guides and containers must be sufficiently transparent to enable an objective assessment of specimen appearance and identification of abnormal physical characteristics without opening the container. This is the same requirement as in the UrMG for urine collection bottles.

Section 7.3 details the minimum performance requirements for hair collection materials. Specimen guides must be capable of holding the hair specimen as positioned by the collector, and have an indication of the orientation (*i.e.,* root or distal end) of the hair specimen collected. The specimen guides or the containers must have graduated markings or guides for collectors to verify the minimum width (*i.e.,* 0.5 inches wide) and length (*i.e.,* 1.0 inch, approximately 2.5 cm, long) of hair that would equate to 100 mg of hair or 50 mg of hair in each container labeled A and B.

Subpart H—Hair Specimen Collection Procedure

This subpart addresses the same topics, in the same order, as the UrMG procedures for urine specimen collection, but excludes UrMG requirements that are specific for observed or monitored urine collection.

Section 8.1 includes the procedures required to provide privacy for the hair donor during the collection procedure.

Sections 8.2 through 8.5 describe the responsibilities and procedures the collector must follow before, during, and after a hair collection. Sections 8.3 and 8.5 specify how hair is to be selected, collected, and packaged. Section 8.3 requires the collector to stop the collection if lice or a similar infestation is present in the donor's hair and Section 8.4 requires the collector to stop the collection if the donor has false hair and the collector cannot collect a sufficient amount of the donor's own hair. In these cases, the collector proceeds with collection of another specimen type authorized by the federal agency. Section 8.5 specifies that only head hair should be collected.

Section 8.6 describes the procedures the collector must follow when a donor is unable to provide a hair specimen (*i.e.,* as described in Sections 2.1, 8.3, and 8.4). In these cases, the collector proceeds with collection of another specimen type authorized by the federal agency.

Section 8.7 requires collection of an alternate specimen when a donor is unable to provide a sufficient amount of hair for faith-based or medical reasons, or due to an insufficient amount or length of hair. As noted earlier, if a federal agency authorizes the collection of hair specimens in its workplace drug testing program, it must also authorize the collection of one or more alternate specimen types in the event that hair cannot be collected, in accordance with the Mandatory Guidelines for the alternate specimen type. Enabling collection of another specimen without delay should facilitate the pre-employment process and may help reduce attempts to subvert the drug test.

Section 8.8 describes how the collector prepares the hair specimens, including the description of the hair split specimen collection.

Section 8.9 specifies how a collector is to report a refusal to test. The procedures are the same as in the UrMG.

Section 8.10 is the same as that in the UrMG in regard to federal agency responsibilities for ensuring that each collection site complies with all provisions of the Mandatory Guidelines. An example of appropriate action that may be taken in response to a reported collection site deficiency is self-assessment using the Collection Site Checklist for the Collection of Hair Specimens for Federal Agency Workplace Drug Testing Programs. This document will be available on the SAMHSA website *http://www.samhsa.gov/workplace/drug-testing.*

Subpart I—HHS-Certification of Laboratories

This subpart addresses the same topics for HHS certification of laboratories to test hair specimens, as are included in the UrMG for HHS certification of laboratories to test urine specimens.

Sections 9.1 through 9.4 contain the same policies as in the UrMG for laboratories to become HHS-certified and to maintain HHS certification to conduct hair testing for a federal agency, as well as what a laboratory must do when certification is not maintained.

Section 9.5 contains specifications for NLCP PT samples, Section 9.6 contains PT requirements for an applicant laboratory, and Section 9.7 contains PT requirements for an HHS-certified laboratory. These sections incorporate the applicable requirements from the current UrMG, but exclude UrMG requirements that are specific for urine testing. In Sections 9.6 and 9.7, the Department also added a requirement for laboratories to correctly identify a sample that has been contaminated with one or more drugs.

As noted earlier, the Department plans to use multiple types of head hair (*e.g.,* drug user hair, hair contaminated with drug analytes, hair subjected to cosmetic treatments, bleached hair) in the NLCP PT Program. These samples will be used to challenge the laboratories' abilities to identify and quantify drug analytes, to remove external contamination, and to identify damaged hair. The Department will use additional PT materials (*e.g.,* spiked reference materials) as part of a multi-pronged approach to assess accuracy and precision of HHS certified hair testing laboratories. The Department is specifically requesting comments on the types of samples and multi-pronged approach to be included in the hair PT program.

The remaining Sections 9.8 through 9.17 contain the same policies as the UrMG. These sections address inspection requirements for applicant and HHS-certified laboratories, inspectors, consequences of an applicant or HHS-certified laboratory failing to meet PT or inspection performance requirements, factors considered by the Secretary in determining the revocation or suspension of HHS-certification, the procedure for notifying a laboratory that adverse action (*e.g.,* suspension or revocation) is being taken by HHS, and the process for re-application once a laboratory's certification has been revoked by the Department.

Section 9.17 states that a list of laboratories certified by HHS to conduct forensic drug testing for federal agencies will be published monthly in the **Federal Register**. The list will indicate the type of specimens (*e.g.,* hair, oral fluid, and/or urine) that each laboratory is certified to test.

Subpart J—Blind Samples Submitted by an Agency

This subpart (Sections 10.1 through 10.4) describes the same policies for federal agency blind samples as the UrMG, with two exceptions. Hair blind samples that challenge specimen validity tests are not required, and the concentration of drug positive blind samples must be at least 1.5 times the initial drug test cutoff concentration (*i.e.,* no upper limit as in the UrMG).

Subpart K—Laboratory

This subpart addresses the same topics, in the same order, as the UrMG procedures for laboratories testing urine specimens. As appropriate, the section includes requirements that are specific for hair testing.

Sections 11.1 through 11.8 include the same requirements that are contained in the UrMG for the laboratory standard operating procedure

(SOP) manual; responsibilities and scientific qualifications of the responsible person (RP); procedures in the event of the RP's extended absence from the laboratory; qualifications of the certifying scientists, certifying technicians, and other HHS-certified laboratory staff; security; and chain of custody requirements for specimens and aliquots.

A new Section 11.9 has been added to describe how an HHS-certified laboratory processes the alternate authorized specimen that was collected at the same time as a hair specimen in accordance with Section 8.5(e).

A new Section 11.10 has been added to describe the amount of hair tested. This section specifies that 1.0 inch of the hair specimen from the root end is tested, when the collector has identified the root end.

Sections 11.11 through 11.16 include the same requirements as in the UrMG in regard to initial and confirmatory drug test requirements, validation, and batch quality control as described in each section below.

Section 11.11 describes the requirements for the initial drug test which permit the use of an immunoassay or alternate technology (*e.g.,* spectrometry or spectroscopy).

Sections 11.12 and 11.13 cover validation and quality control requirements for the initial tests.

Section 11.14 describes the same requirements for a confirmatory drug test as the UrMG with one exception. This section requires laboratories to perform a decontamination procedure prior to confirmatory drug testing.

Sections 11.15 and 11.16 cover validation and quality control requirements for the confirmatory tests. Section 11.15 includes the requirement to demonstrate and document the effectiveness of decontamination procedures and Section 11.16 requires at least one control in each batch to monitor the effectiveness of the decontamination procedure.

Sections 11.17 and 11.18 address specimen validity tests that a laboratory performs for hair specimens. The Department is proposing that each laboratory have a validated specimen validity test that identifies hair that has been damaged to the extent that a drug test may be affected. The HMG allow, but do not require, other specimen validity testing for hair. The HMG collection procedures greatly minimize the risks of donor attempts to tamper with the specimen. To avoid prohibiting use of scientifically supportable hair biomarker or adulterant tests that may become available, the Department is authorizing specimen validity testing upon request of the Medical Review Officer as described in Sections 3.1 and 3.5. All tests must be properly validated and include appropriate quality control samples in accordance with these Guidelines. Specimen validity testing methods must be approved by SAMHSA prior to use with federally regulated specimens. As noted earlier, the Department is requesting information on procedures to identify damaged hair and other specimen validity tests for hair. The Department is also requesting comments on whether testing for hair damage should be routinely performed on all specimens or only on certain specimens (*e.g.,* based on initial test results).

Section 11.19 describes in detail, requirements for how a certified laboratory reports test results to the MRO for hair specimens. This section has requirements specific to hair.

Sections 11.20 and 11.21 contain the same requirements as the UrMG for length of time of specimen and record retention and specifies that hair specimens must be stored at room temperature and out of direct light. As noted in Section 11.9, the collector forwards the alternate authorized specimen collected at the same time as the hair specimen to a laboratory that is certified by HHS for that specimen type. Section 11.20 also requires that alternate authorized specimens (*e.g.,* urine, oral fluid) be retained under appropriate storage conditions as specified by the Mandatory Guidelines for that specimen type, for the same period of time that the associated hair specimen is retained.

Section 11.22 describes the statistical summary report that a laboratory must provide to a federal agency for hair testing. This section is comparable to the same section in the UrMG, differing only in that the statistical report elements are specific for hair testing.

Section 11.23 addresses the laboratory information to be made available to a federal agency and describes the contents of a standard laboratory documentation package. This is the same policy as in the UrMG.

Section 11.24 addresses the laboratory information to be made available to an applicant or employee upon written request through the MRO, and clarifies that specimens are not a part of the information package that donors can receive from HHS-certified laboratories. This is the same policy as in the UrMG.

The remaining section, Section 11.25, describes the relationships that are prohibited between an HHS-certified laboratory and an MRO. These are the same as in the UrMG.

Subpart L—Instrumented Initial Test Facility (IITF)

This subpart emphasizes that federal agencies may choose to use IITFs for urine testing but not for hair testing. Section 12.1 clearly states that only HHS-certified laboratories are authorized to test hair specimens for federal agency workplace drug testing programs. Instrumented Initial Test Facilities will not be allowed, primarily because of the limited amount of hair collected from the donor.

Subpart M—Medical Review Officer (MRO)

MROs play a key role in the federal safety program and maintain the balance between the safety and privacy objectives of the program. This subpart addresses the same topics, in the same order, as the UrMG procedures for MROs.

The proposed requirements in Section 13.1 through 13.3 are the same as in the UrMG, including training requirements in Section 13.3 for a physician to receive training on the Mandatory Guidelines for Federal Workplace Drug Testing Programs for all authorized specimen types prior to serving as an MRO, and for a certified MRO to complete training on any revisions to the Guidelines prior to their effective date, to continue serving as an MRO for federal agency specimens. Section 13.4 includes the same requirements as the UrMG except the HMG do not permit an MRO to conduct a medical evaluation or review the examining physician's findings to determine clinical evidence of opioid abuse when codeine or morphine is positive below a specified concentration in hair. Because of the longer detection time for hair, the medical evaluation would not be useful after limited drug use (*e.g.,* injection site healing). Furthermore, this requirement would have significant effects on the costs of the program and the turnaround time of the result. The Department would like to clarify that the Mandatory Guidelines, including the HMG, authorize testing that detects illicit drug use, not drug ''abuse.'' Therefore, an MRO's inquiry in this context is limited to whether a legitimate medical explanation exists for the positive result, not whether the donor has ''abused'' opioids.

Section 13.5 describes an MRO's actions when reviewing a hair specimen's test results. This section includes procedures that are specific to hair specimen results. The review and verification procedures for negative, adulterated, and substituted results are the same as those for urine. The review

and verification procedures for invalid results and rejected specimens are the same as those for urine, except that the HMG specifically requires testing of an alternate specimen type in these cases. MRO actions required for a positive hair test are described below.

When an HHS-certified laboratory reports a positive result for the primary (A) hair specimen, the MRO must contact the donor to determine if there is an explanation for the positive test. If the donor provides a legitimate medical explanation (*e.g.,* a valid prescription), the MRO reports the hair test result as negative to the federal agency. If the donor admits illicit use of the drug(s) that caused the positive test, the MRO reports the hair test result as positive to the federal agency. If the donor is unable to provide a legitimate medical explanation and does not admit illicit drug use, the MRO cancels the test and directs testing of an alternate authorized specimen from the donor.

If an alternate authorized specimen was collected at the same time as the hair specimen, the MRO directs (in writing) the laboratory who has custody of the specimen to proceed with testing. If an alternate specimen was not collected, the MRO directs the agency to collect an alternate authorized specimen from the donor. The collector, laboratory, and MRO must follow the applicable Mandatory Guidelines for Federal Workplace Drug Testing Programs for that specimen type.

The MRO would also direct testing of the alternate authorized specimen for invalid and rejected for testing hair results.

The Department had considered specifying a morphine or codeine confirmatory concentration that could be used as a decision point to rule out consumption of food products as a legitimate explanation for the donor having morphine or codeine at or above the specified concentration in his or her hair. There is limited information in the scientific literature on the codeine and/or morphine concentrations seen in hair after consumption of poppy seed food products. One study found morphine concentrations ranging from 0.05 –0.48 ng/10 mg (5.0–48.0 pg/mg) in the hair of 10 poppy seed consumers.[46] The Department had chosen a conservative concentration of 2000 pg/mg (*i.e.,* 10 times the confirmatory test cutoff) as the decision point. Because the HMG require testing of an alternate specimen when a hair test is positive (*i.e.,* unless the donor has a legitimate medical explanation or admits illicit drug use), the additional decision point for codeine and morphine results is not needed. However, in the event that this is needed in the final HMG, the Department specifically requests public comment on the appropriateness of this concentration.

Section 13.6 describes what an MRO must do when the collector reports that a donor did not provide a sufficient amount of hair for a drug test. In the event a donor was unable to provide a sufficient amount of hair, the collector should direct the donor to submit another authorized specimen type consistent with the respective federal agency's policies and procedures.

Sections 13.7 and 13.8 are similar to the UrMG, addressing who may request a test of the split (B) specimen and how an MRO reports a primary (A) specimen result. However, because the MRO does not report positive hair test results to the federal agency without corroborating evidence (*i.e.,* donor admission of illicit drug use); the split specimen is not tested to reconfirm a positive hair test result. Split hair specimens are only retested to reconfirm adulterated or substituted results at the donor's request.

Section 13.9 is the same as in the UrMG, addressing the types of relationships that are prohibited between an MRO and an HHS- certified laboratory.

Subpart N—Split Specimen Tests

Section 14.1 includes the same policies as the UrMG in regard to when a split (B) specimen may be tested. As noted previously in this preamble, because the MRO does not report positive hair test results to the federal agency without corroborating evidence (*i.e.,* donor admission of illicit drug use), split specimens are not tested to reconfirm positive hair test results. A split hair specimen may be tested only to reconfirm an adulterated or substituted result reported for the primary hair specimen.

Section 14.2 specifies how the split testing laboratory tests a split (B) hair specimen when the primary (A) specimen was reported as adulterated. As noted previously in this Preamble, the Department is not aware of any adulterants being used for hair specimens, but has included policies in these Guidelines to allow for the testing and reporting of adulterants in hair.

Section 14.3 specifies how the split testing laboratory tests a split (B) hair specimen when the primary (A) specimen was reported as substituted. As noted previously in this Preamble, the Department is requesting information from the public on specimen validity tests for hair, and has included policies in these Guidelines to allow for the testing and reporting of hair as substituted.

Section 14.4 includes the same policy as the UrMG, requiring the laboratory to report the split (B) specimen result to the MRO.

In Section 14.5, the Department is proposing the actions an MRO must take after receiving the split (B) specimen result. This section is analogous to the corresponding section in the UrMG with differences, where applicable, for hair specimen reports.

Section 14.6 is the same as the UrMG in regard to how an MRO reports a split (B) specimen result to an agency.

Section 14.7 is the same as the UrMG, requiring the HHS-certified laboratory to retain a split hair specimen for the same length of time that the primary specimen is retained.

Subpart O—Criteria for Rejecting a Specimen for Testing

Section 15.1 specifies the same fatal flaws as the UrMG that require the laboratory to reject the specimen, with one addition specific to hair specimens. Section 15.1, item (i) requires the laboratory to reject the specimen when the physical characteristics of the primary (A) and split (B) specimen are clearly different (*i.e.,* could not be from the same individual). An example of a hair specimen that would be rejected is a short straight hair sample labeled as A and a long curly hair labeled as B. However, this requirement does not apply to A and B specimens that only have different hair color, because an individual may have different colored hair. Sections 3.8(c) and 11.19(e) address reporting as invalid when A and B specimens have clearly different colors, and the A specimen has been tested.

Section 15.3 lists those discrepancies that would not affect either testing or reporting of a hair specimen result. These are similar to the corresponding section in the UrMG, with differences where applicable for hair specimens.

The other sections in this Subpart (*i.e.,* Sections 15.2 and 15.4) contain the same policies as the UrMG concerning correctable discrepancies and fatal flaws that may require the MRO to cancel the test.

Subpart P—Laboratory Suspension/Revocation Procedures

In this subpart, the Department proposes the same procedures that are described in the UrMG to revoke or suspend the HHS certification of laboratories.

Impact of These Guidelines on Government Regulated Industries

The Department is aware that these proposed new Guidelines may impact the Department of Transportation (DOT) and Nuclear Regulatory Commission (NRC) regulated industries depending on these agencies' decisions to incorporate the final HMG into each of their programs under their own authority.

Topics of Special Interest

The Department requests public comment on all aspects of this notice. However, the Department is providing the following list of areas for which specific comments are requested.

The continuing questions and concerns on the impact of hair color on drug test results are discussed in this preamble. The Department is requesting information including, at a minimum, support from the scientific literature to address the impact of hair color on hair drug test results.

To address the potential issues of both disparate impact and external contamination, Section 2.1 includes the requirement to collect a second biological specimen (*i.e.,* urine or other authorized specimen type) at the same time as the hair specimen or as directed by the MRO after verification of a hair specimen as positive, invalid, or when the laboratory rejected the hair specimen. Under these procedures, MROs would only be authorized to report the results of a positive hair test to an agency when the donor admits to the MRO the illicit use of the drug(s) that caused the positive test. The Department is specifically requesting comments including support from the recent scientific literature on advances in the science of hair testing that adequately address these issues and elucidate the extent to which hair color, external contamination as well as other factors (*e.g.,* hair treatments, hygiene) will affect hair tests and the interpretation of hair drug test results. The Department is also requesting comment with scientific support on whether THCA positive hair tests should be excluded from the requirement to test an alternate authorized specimen (*i.e.,* MROs would report verified positive THCA hair results to the federal agency) and information on other unique metabolites that can be analyzed on a stand-alone basis for the other proposed drugs listed in Section 3.4.

Section 2.2 describes the circumstances under which a hair specimen may be collected. The Department proposes to limit the reasons for testing to pre-employment and random. Because drug analytes do not appear in hair for 5–7 days after use, hair is not an appropriate specimen to detect recent use. However, the longer window of detection makes hair an appropriate choice for pre-employment and random. The Department is requesting comments on whether hair may be used for other reasons (*e.g.,* return to duty, follow-up,).

In Sections 3.1 and 3.5, the Department allows laboratories to perform specimen validity testing for hair specimens. The Department is seeking comments on whether validity testing is necessary for hair and, if so, what tests could be used.

Section 3.4 lists the proposed test analytes and cutoff concentrations. The Department is specifically requesting comments on the appropriateness of these analytes and cutoffs.

Section 3.5 allows laboratories to perform additional tests to provide information that the MRO would use to report a verified drug test result. The Department is specifically requesting comments including supporting data from the scientific literature on additional analytes (*e.g.,* metabolites) that may be tested on a case-by-case basis or routinely upon MRO request.

Section 9.5 contains the specifications for PT samples. The Department is specifically requesting comments on the types of samples and the multi-pronged approach that should be included in a hair PT program.

In Section 11.14, the Department is proposing that laboratories implement procedures to distinguish external contamination from drug use using a validated and effective decontamination procedure prior to confirmatory testing. The Department is requesting comment on (1) decontamination procedures that remove drug present as a result of external contamination, (2) procedures used to prepare decontamination controls, and (3) drug metabolites that are uniquely found in hair after drug use.

In Section 11.17, the Department is proposing that laboratories implement procedures to identify damaged hair specimens. The Department is requesting information including, at a minimum, support from the scientific literature, on procedures to identify damaged hair. The Department is also requesting comments on whether testing for hair damage should be routinely performed on all specimens or only on certain specimens (*e.g.,* based on initial test results).

In Section 13.5, the Department had considered a concentration equal to or greater than 2000 pg/mg morphine or codeine be used by the MRO to report a positive hair test result for these drugs in the absence of a legitimate medical explanation (*i.e.,* prescription), to rule out the possibility of a positive result due to consumption of food products. The proposal for testing an alternate specimen type for all positive hair tests negates the need for this procedure. However, the Department is requesting specific comments on this proposed concentration if it is included in the final HMG.

Regulatory Impact and Notices

The Department welcomes public comment on all figures and assumptions described in this section.

Executive Orders 13563 and 12866

Executive Order 13563 of January 18, 2011 (Improving Regulation and Regulatory Review) states ''Our regulatory system must protect public health, welfare, safety, and our environment while promoting economic growth, innovation, competitiveness, and job creation.'' Consistent with this mandate, Executive Order 13563 requires agencies to tailor ''regulations to impose the least burden on society, consistent with obtaining regulatory objectives.'' Executive Order 13563 also requires agencies to ''identify and consider regulatory approaches that reduce burdens and maintain flexibility and freedom of choice'' while selecting ''those approaches that maximize net benefits.'' This notice proposes a regulatory approach that will reduce burdens to providers and to consumers while continuing to provide adequate protections for public health and welfare.

The Secretary has examined the impact of the proposed Guidelines under Executive Order 12866, which directs federal agencies to assess all costs and benefits of available regulatory alternatives and, when regulation is necessary, to select regulatory approaches that maximize net benefits (including potential economic, environmental, public health and safety, and other advantages; distributive impacts; and equity).

According to Executive Order 12866, a regulatory action is ''significant'' if it meets any one of a number of specified conditions, including having an annual effect on the economy of $100 million; adversely affecting in a material way a sector of the economy, competition, or jobs; or if it raises novel legal or policy issues. The proposed Guidelines do establish additional regulatory requirements and allow an activity that was otherwise prohibited. While this is a significant regulatory action as defined

by Executive Order 12866, the Secretary finds that it does not confer significant costs to regulated entities warranting a regulatory flexibility analysis. Therefore, the Department does not find these proposed mandatory guidelines to be a significant burden for federal agencies or incur a significant cost. In addition, a federal agency is not required to adopt hair testing in their Drug-free Workplace Programs.

Regulatory Flexibility Analysis

For the reasons outlined above, the Secretary has determined that the proposed Guidelines will not have a significant impact upon a substantial number of small entities within the meaning of the Regulatory Flexibility Act [5 U.S.C. 605(b)]. The flexibility added by the HMG will not require additional expenditures. Therefore, an initial regulatory flexibility analysis is not required for this notice.

Need for Regulation

Enhances Flexibility

The proposed Mandatory Guidelines for Federal Workplace Drug Testing Programs using Hair (HMG) will provide flexibility to address workplace drug testing needs of federal agencies and federally regulated entities while continuing to promulgate established standards to ensure the full reliability and accuracy of drug test results.

Enhances Versatility

Medical conditions exist that may prevent a federal employee or applicant from providing sufficient urine or oral fluid for a drug test. When the HMG are implemented, in the event that an individual is unable to provide a urine or oral fluid specimen, the federal agency may authorize the collection of a hair specimen. In the event a federal agency adopts hair testing and the donor is unable to provide a hair specimen for faith-based or medical reasons, or due to an insufficient amount or length of hair, the federal agency would be required to collect an alternate specimen. Thus, the inclusion of hair in federal workplace drug testing programs will reduce both the need to reschedule collections and the need for the Medical Review Officer (MRO) to arrange a medical evaluation of a donor's inability to provide a urine or oral fluid specimen.

Urine collection requires use of a specialized collection facility, secured restrooms, observers of the same gender as the donor for observed collections, and other special requirements. Hair may be collected in various settings and may not necessarily require a specialized collection facility, but if a second authorized specimen is collected at the same time then the collection facility must meet the requirements for a collection facility for the alternate specimen. An acceptable hair collection site must allow the collector to observe the donor, maintain control of the collection materials during the process, maintain record storage, and protect donor privacy.

Decreases Invalid Tests

Hair collections will occur under direct observation, which should substantially lessen the risks of invalid results due to specimen substitution and adulteration. The Department is also proposing that each laboratory have a method to identify damaged hair as invalid specimens, which would further decrease the risk of invalid results.

Saves Time

The requirement to collect a urine or oral fluid specimen in the event that the donor cannot provide a hair specimen (and vice versa) will reduce both the need to reschedule a collection and the need for the MRO to arrange a medical evaluation of a donor's inability to provide a urine or oral fluid specimen.

Versatility in Detection

The time course of drugs and metabolites differs between hair, urine, and oral fluid, resulting in some differences in analytes and detection times. A federal agency may wish to pursue hair testing if they want to use a longer detection window and retain the ability to use other specimen types for circumstances necessitating more recent use, such as post-accident situations.

Current Testing in the Drug-Free Workplace Program

Urine was the original specimen of choice for forensic workplace drug testing, and urine testing is expected to remain an established and reliable component of federal workplace drug testing programs. Urine testing provides scientifically accurate and legally defensible results and has proven to be an effective deterrent to drug use in the workplace. However, urine testing is not observed in all cases. Hair testing, like oral fluid testing, is observed, and therefore, less susceptible to substitution or adulteration.

Time Horizon of this Analysis

The transition to the testing of hair will be gradual over the course of four years, when it should plateau. By that time, it is expected that hair tests will account for 25–30% of all regulated drug testing. This estimate is based on the current percentage of regulated pre-employment and random tests using urine and the non-regulated sector's time course of the testing of hair, oral fluid, and urine in the past four years.

Cost and Benefit

Using data obtained from the Federal Workplace Drug Testing Programs and HHS certified laboratories, the Department estimates that 275,000 specimens are will be tested annually by federal agencies. HHS projects that approximately 1% (or 2,750) of the 275,000 specimens tested per year will be hair specimens and 92% (or 253,000) will be urine specimens, with the remainder being oral fluid specimens (19,250). The approximate annual number of regulated specimens for the Department of Transportation (DOT) and Nuclear Regulatory Commission (NRC) is 6.1 million and 150,000, respectively. Should DOT and NRC allow hair testing in their regulated workplace programs, the estimated annual numbers of specimens for DOT would be 25% (1.53 million) hair specimens for pre-employment, 7% (427,000) oral fluid specimens and 68% (4.15 million) urine, and numbers of specimens for NRC would be 10% (15,000) hair, 7% (10,500) oral fluid and 83% (124,500) urine. These projected numbers are based on existing annual pre-employment testing that currently occurs in the regulated industries and current hair testing being conducted.

In Section 3.4, the Department is proposing criteria for calibrating initial tests for grouped analytes such as opiates and amphetamines, and specifying the cross-reactivity of the immunoassay to the other analytes(s) within the group. These proposed Guidelines allow the use of methods other than immunoassay for initial testing. An immunoassay manufacturer may incur costs if they choose to alter their existing product and resubmit the immunoassay for FDA clearance.

Costs associated with the addition of hair testing and testing for oxycodone, oxymorphone, hydrocodone and hydromorphone will be minimal based on information from some HHS-certified laboratories currently testing non-regulated hair specimens. Likewise, there will be minimal costs associated with changing initial testing to include MDA and MDMA since current immunoassays can be adapted to test for these analytes. Prior to being allowed to test regulated hair specimens, laboratories must be certified by the Department through the NLCP. Estimated laboratory costs to complete and submit the application are $3,000, and estimated costs for the Department to process the application are $10,200.

These estimates are based on the NLCP fee schedule and historical costs. The initial certification process includes the requirement to demonstrate that their performance meets Guidelines requirements by testing three (3) groups of PT samples. The Department will provide the three groups of PT samples through the NLCP at no cost to laboratories participating in the NLCP Hair Pilot PT Program. Based on costs charged for urine specimen testing, laboratory costs to conduct the PT testing would range from $900 to $1,800 for each applicant laboratory.

Agencies choosing to use hair in their drug testing programs may also incur some costs for training of federal employees such as drug program coordinators. Based on current training modules offered to drug program coordinators, and other associated costs including travel for 90% of drug program coordinators, the estimated total training cost for a one-day training session would be between $108,000 and $138,000 (*i.e.,* assuming 8 hours of time multiplied by a GS 12/13 wage including benefits and overhead adjustments). This training cost is included in the costs of the proposed HMG. The Department will offer the choice of online or in-person training. This will eliminate travel costs for those federal agencies who choose to use online training.

Summary of One-Time Costs

	Lower bound	Upper bound	Primary
Cost of Application *			$12,000.00
Application Processing *			40,800.00
Performance Testing *	$3,600.00	$7,200.00	
Training *	54,000.00	69,000.00	
Total	110,400.00	129,000.00	

* Estimated using costs presented above multiplied by the number of laboratories (4).

Costs and Benefits

Thus, the Department estimates one-time, upfront costs of between $110,400 and $129,000 for hair testing laboratories. While the Department has only monetized a small portion of the benefits to a small subset of the workplace drug testing programs that could be affected by the HMG (*i.e.,* federal employee testing programs and not drug testing programs conducted under NRC and DOT regulations), the Department is confident that the benefits would outweigh the one-time upfront costs. Even if NRC and DOT do not implement hair testing, the benefits to federal workplace testing programs could be a cost savings, which would recur on annual basis.

Regulatory Flexibility Analysis

For the reasons outlined above, the Secretary has determined that the proposed Guidelines will not have a significant impact upon a substantial number of small entities within the meaning of the Regulatory Flexibility Act [5 U.S.C. 605(b)]. The flexibility added by the HMG will not require addition expenditures. Therefore, an initial regulatory flexibility analysis is not required for this notice.

As mentioned in the section on Executive Orders 13563 and 12866, the Secretary anticipates that there will be no reduction in costs if drug testing is expanded under the HMG. The costs to implement this change to regulations are negligible. The added flexibility will permit federal agencies to select the specimen type best suited for their needs and to authorize collection of an alternate specimen type when an applicant or employee is unable to provide the originally authorized specimen type. The added flexibility will also benefit federal applicants and employees, who should be able to provide one of the specimen types, thereby facilitating the drug test required for their employment.

Unfunded Mandates

The Secretary has examined the impact of the proposed Guidelines under the Unfunded Mandates Reform Act (UMRA) of 1995 (Pub. L. 104–4). This notice does not trigger the requirement for a written statement under section 202(a) of the UMRA because the proposed Guidelines do not impose a mandate that results in an expenditure of $100 million (adjusted annually for inflation) or more by either state, local, and tribal governments in the aggregate or by the private sector in any one year.

Environmental Impact

The Secretary has considered the environmental effects of the HMG. No information or comments have been received that would affect the agency's determination there would be a significant impact on the human environment and that neither an environmental assessment nor an environmental impact statement is required.

Executive Order 13132: Federalism

The Secretary has analyzed the proposed Guidelines in accordance with Executive Order 13132: Federalism. Executive Order 13132 requires federal agencies to carefully examine actions to determine if they contain policies that have federalism implications or that preempt state law. As defined in the Order, ''policies that have federalism implications'' refer to regulations, legislative comments or proposed legislation, and other policy statements or actions that have substantial direct effects on the states, on the relationship between the national government and the states, or on the distribution of power and responsibilities among the various levels of government.

Because the Mandatory Guidelines govern standards applicable to the management of federal agency personnel, there should be little, if any, direct effect on the states, on the relationship between the national government and the states, or on the distribution of power and responsibilities among the various levels of government. Accordingly, the Secretary has determined that the Guidelines do not contain policies that have federalism implications.

Paperwork Reduction Act of 1995

The proposed Guidelines contain information collection requirements which are subject to review by the Office of Management and Budget (OMB) under the Paperwork Reduction Act of 1995 [the PRA 44 U.S.C. 3507(d)]. Information collection and recordkeeping requirements which would be imposed on laboratories engaged in drug testing for federal agencies concern quality assurance and quality control documentation, reports, performance testing, and inspections as

set out in subparts H, I, K, L, M and N. To facilitate ease of use and uniform reporting, a Federal CCF for each type of specimen collected will be developed as referenced in Section 6.1. The Department has submitted the information collection and recordkeeping requirements contained in the proposed Guidelines to OMB for review and approval.

Privacy Act

The Secretary has determined that the Guidelines do not contain information collection requirements constituting a system of records under the Privacy Act. The **Federal Register** notice announcing the proposed Mandatory Guidelines for Federal Workplace Drug Testing Programs using Hair is not a system of records as noted in the information collection/recordkeeping requirements below.

Note the collection of information on the Federal Chain of Custody Form as required by the Mandatory Guidelines are discussed below under information collection and record keeping and are a separate submission and approval by the Office of Management and Budget.

Executive Order 13175: Consultation and Coordination With Indian Tribal Governments

Executive Order 13175 (65 FR 67249, November 6, 2000) requires SAMHSA to develop an accountable process to ensure ''meaningful and timely input by tribal officials in the development of regulatory policies that have tribal implications.'' ''Policies that have tribal implications'' as defined in the Executive Order, include regulations that have ''substantial direct effects on one or more Indian tribes, on the relationship between the federal government and the Indian tribes, or on the distribution of power and responsibilities between the federal government and Indian tribes.'' The proposed Guidelines do not have tribal implications. The Guidelines will not have substantial direct effects on tribal governments, on the relationship between the federal government and Indian tribes, or on the distribution of power and responsibilities between the federal government and Indian tribes, as specified in Executive Order 13175.

Information Collection/Record Keeping Requirements

The information collection requirements (*i.e.,* reporting and recordkeeping) in the current Guidelines (82 FR 7920 for urine, 84 FR 57554 for oral fluid), which establish the scientific and technical guidelines for federal workplace drug testing programs and establish standards for certification of laboratories engaged in urine and oral fluid drug testing for federal agencies under authority of 5 U.S.C. 7301 and Executive Order 12564, are approved by the Office of Management and Budget (OMB) under control number 0930–0158. The Federal Drug Testing Custody and Control Form used to document the collection and chain of custody of urine and oral fluid specimens at the collection site, for laboratories to report results, and for Medical Review Officers to make a determination; the National Laboratory Certification Program (NLCP) application; the NLCP Laboratory Information Checklist; and recordkeeping requirements in the current Guidelines, as approved under control number 0930–0158, will be revised for the use of hair specimens when the final Guidelines using hair are issued.

The title, description and respondent description of the information collections are shown in the following paragraphs with an estimate of the annual reporting, disclosure and recordkeeping burden. Included in the estimate is the time for reviewing instructions, searching existing data sources, gathering and maintaining the data needed, and completing and reviewing the collection of information.

Title: The Mandatory Guidelines for Federal Workplace Drug Testing Programs using Hair.

Description: The Guidelines establish the scientific and technical guidelines for federal drug testing programs and establish standards for certification of laboratories engaged in drug testing for federal agencies under authority of Public Law 100–71, 5 U.S.C. 7301 note, and Executive Order No. 12564. Federal drug testing programs test applicants to sensitive positions, individuals involved in accidents, individuals for cause, and random testing of persons in sensitive positions. The program has depended on urine specimen testing since 1988; the reporting, recordkeeping and disclosure requirements associated with urine specimen testing are approved under OMB control number 0930–0158. Since 1988, several products have appeared on the market making it easier for individuals to adulterate or substitute the urine specimen. Scientific advances in the use of hair in detecting drugs have made it possible for this alternative specimen to be pursued in federal programs. The proposed Guidelines establish when hair specimens may be collected, the procedures that must be used in collecting a hair specimen, and the certification process for approving a laboratory to test hair specimens.

Description of Respondents: Individuals or households; businesses; or other-for-profit; not-for-profit institutions.

The burden estimates in the tables below are based on the following number of respondents: 38,000 donors who apply for employment in testing designated positions, 100 collectors, 10 hair specimen testing laboratories, and 100 MROs.

ESTIMATE OF ANNUAL REPORTING BURDEN

Section	Purpose	Number of respondents	Responses/ respondent	Hours/ response	Total hours
9.2(a)(1)	Laboratory required to submit application for certification	10	1	3	30
9.10(a)(3)	Materials to submit to become an HHS inspector	10	1	2	20
11.3	Laboratory submits qualifications of RP to HHS	10	1	2	20
11.4(c)	Laboratory submits information to HHS on new RP or alternate RP.	10	1	2	20
11.21	Specifications for laboratory semi-annual statistical report of test results to each federal agency.	10	5	0.5	25
14.7	Specifies that MRO must report all verified split specimen test results to the federal agency.	100	5	0.05 (3 min)	25
16.1(b) & 16.5(a).	Specifies content of request for informal review of suspension/proposed revocation of certification.	1	1	3	3
16.4	Specifies information appellant provides in first written submission when laboratory suspension/revocation is proposed.	1	1	0.5	0.5

ESTIMATE OF ANNUAL REPORTING BURDEN—Continued

Section	Purpose	Number of respondents	Responses/ respondent	Hours/ response	Total hours
16.6	Requires appellant to notify reviewing official of resolution status at end of abeyance period.	1	1	0.5	0.5
16.7(a)	Specifies contents of appellant submission for review	1	1	50	50
16.9(a)	Specifies content of appellant request for expedited review of suspension or proposed revocation.	1	1	3	3
16.9(c)	Specifies contents of review file and briefs	1	1	50	50
Total		156			247

The following reporting requirements are also in the proposed Guidelines, but have not been addressed in the above reporting burden table: Collector must report any unusual donor behavior or refusal to participate in the collection process on the Federal CCF (Sections 1.8, 8.9); collector annotates the Federal CCF when a sample is a blind sample (Section 10.3(a)); MRO notifies the federal agency and HHS when an error occurs on a blind sample (Section 10.4(d)); Section 13.5 describes the actions an MRO takes to report a primary specimen result; and Section 14.6 describes the actions an MRO takes to report a split specimen result. SAMHSA has not calculated a separate reporting burden for these requirements because they are included in the burden hours estimated for collectors to complete Federal CCFs and for MROs to report results to federal agencies.

ESTIMATE OF ANNUAL DISCLOSURE BURDEN

Section	Purpose	Number of respondents	Responses/ respondent	Hours/ response	Total hours
8.3(a) & 8.6	Collector must contact federal agency point of contact	100	1	0.05 (3 min)	5
11.23 & 11.24	Information on drug test that laboratory must provide to federal agency upon request or to donor through MRO.	10	10	3	300
13.7(b)	MRO must inform donor of right to request split specimen test when an adulterated or substituted result is reported.	100	5	3	1,500
Total		210			1,805

The following disclosure requirements are also included in the proposed Guidelines, but have not been addressed in the above disclosure burden table: The collector must explain the basic collection procedure to the donor and answer any questions (Section 8.3(h), and must review the procedures for the hair specimen collection materials used with the donor (Section 8.4(c)). SAMHSA believes having the collector explain the collection procedure to the donor and answer any questions is a standard business practice and not a disclosure burden.

ESTIMATE OF ANNUAL RECORDKEEPING BURDEN

Section	Purpose	Number of respondents	Responses/ respondent	Hours/ response	Total hours
8.3, 8.4, & 8.8	Collector completes Federal CCF for specimen collected	100	380	0.07 (4 min)	2,534
8.8(c) & (e)	Donor initials specimen labels/seals and signs statement on the Federal CCF.	38,000	1	0.08 (5 min)	3,167
11.8(a) & 11.18.	Laboratory completes Federal CCF upon receipt of specimen and before reporting result.	10	3,800	0.05 (3 min)	1,900
13.4(d) (4), 13.8 (c), & 14.7(c).	MRO completes Federal CCF before reporting the result	100	380	0.05 (3 min)	1,900
14.1(b)	MRO documents donor's request to have split hair specimen tested.	300	1	0.05 (3 min)	15
Total		38,510			9,516

The proposed Guidelines contain a number of recordkeeping requirements that SAMHSA considers not to be an additional recordkeeping burden. In subpart D, a trainer is required to document the training of an individual to be a collector [Section 4.3(a)(3)] and the documentation must be maintained in the collector's training file [Section 4.3(c)]. SAMHSA believes this training documentation is common practice and is not considered an additional burden. In subpart F, if a collector uses an incorrect form to collect a federal agency specimen, the collector is required to provide a statement [Section 6.2(b)] explaining why an incorrect form was used to document collecting the specimen. SAMHSA believes this is an extremely infrequent occurrence and does not create a significant additional

recordkeeping burden. Subpart H [Sections 8.3 (f), and 8.4 (d), (f)] requires collectors to enter any information on the Federal CCF of any unusual findings during the hair specimen collection procedure. These recordkeeping requirements are an integral part of the collection procedure and are essential to documenting the chain of custody for the specimens collected. The burden for these entries is included in the recordkeeping burden estimated to complete the Federal CCF and is, therefore, not considered an additional recordkeeping burden. Subpart K describes a number of recordkeeping requirements for laboratories associated with their testing procedures, maintaining chain of custody, and keeping records (*i.e.,* Sections 11.1(a) and (d); 11.2(b), (c), and (d); 11.6(b); 11.7(c); 11.8; 11.12(a); 11.15(a); 11.18; 11.19(a), (b), and (c); 11.22; 11.23, and 11.24. These recordkeeping requirements are necessary for any laboratory to conduct forensic drug testing and to ensure the scientific supportability of the test results. Therefore, they are considered to be standard business practice and are not considered a burden for this analysis.

Thus, the total annual response burden associated with the testing of hair specimens by the laboratories is estimated to be 13,268 hours (that is, the sum of the total hours from the above tables). This is in addition to the 1,788,809 hours currently approved by OMB under control number 0930–0158 for urine testing under the current Guidelines.

As required by Section 3507(d) of the PRA, the Secretary has submitted a copy of these proposed Guidelines to OMB for its review. Comments on the information collection requirements are specifically solicited in order to: (1) Evaluate whether the proposed collection of information is necessary for the proper performance of HHS's functions, including whether the information will have practical utility; (2) evaluate the accuracy of HHS's estimate of the burden of the proposed collection of information, including the validity of the methodology and assumptions used; (3) enhance the quality, utility, and clarity of the information to be collected; and (4) minimize the burden of the collection of information on those who are to respond, including through the use of appropriate automated, electronic, mechanical, or other technological collection techniques or other forms of information technology.

OMB is required to make a decision concerning the collection of information contained in these proposed Guidelines between 30 and 60 days after publication of this document in the **Federal Register**. Therefore, a comment to OMB is best assured of having its full effect if OMB receives it within 30 days of publication. This does not affect the deadline for the public to comment to HHS on the proposed Guidelines.

Organizations and individuals desiring to submit comments on the information collection requirements should direct them to the Office of Information and Regulatory Affairs, OMB, New Executive Office Building, 725 17th Street NW, Washington, DC 20502, Attn: Desk Officer for SAMHSA. Because of delays in receipt of mail, comments may also be sent to (202) 395–6974 (fax).

References

1. DuPont RL, Baumgartner WA. 1995. Drug testing by urine and hair analysis: complementary features and scientific issues. Forensic Sci Int. 70:63–76.
2. Barroso M, Gallardo E, Vieira DN, Lopez-Rivadulla M, Queiroz JA. 2011. Hair: a complementary source of bioanalytical information in forensic toxicology. Bioanalysis. 3:67–79.
3. LeBeau MA, Montgomery MA, Brewer JD. 2011. The role of variations in growth rate and sample collection on interpreting results of segmental analyses of hair. Forensic Sci Int. 210:110–6.
4. Boumba VA, Ziavrou KS, Vougiouklakis T. 2006. Hair as a biological indicator of drug use, drug abuse or chronic exposure to environmental toxicants. Int J Toxicol. 25:143–63.
5. de Berker D, Higgins CA, Johoda C, Christiano AM. 2012. Biology of hair and nails. In: Bolognia, JL, Jorizzo, JL, Schaffer, JV, editors. Dermatology. 3rd ed. China: Elsevier Saunders.
6. Pötsch L, Skopp G, Moeller MR. 1997. Biochemical approach on the conservation of drug molecules during hair fiber formation. Forensic Sci Int. 84:25–35.
7. Caplan YH, Goldberger BA. 2001. Alternative specimens for workplace drug testing. J Anal Toxicol, 25:396–399.
8. Henderson GL. 1993. Mechanisms of drug incorporation into hair. For Sci Int. 63:19–29.
9. Mak WC, Patzelt A, Richter H, Renneberg R, Lai KK, Ruhl E, Sterry W, Lademann J. 2012. Triggering of drug release of particles in hair follicles. J.Control Release. 160:509–514.
10. Auwarter V, Wohlfarth A, Traber, J, Thieme D, Weinmann W. 2010. Hair analysis for delta-9-tetrahydrocannabinolic acid A–new insights into the mechanism of drug incorporation of cannabinoids into hair. Forensic Sci Int. 196:10–13.
11. Mantinieks D, Gerostamoulos D, Wright P, Drummer, O. 2018. The effectiveness of decontamination procedures used in forensic hair analysis. Forensic Sci Med Pathol. 14:349–357.
12. Morris-Kukoski C, Montgomery MA, Hammer RI. 2014. Analysis of extensively washed hair from cocaine users and drug chemists to establish new reporting criteria. J Anal Toxicol. 38:628–36.
13. Cuypers E, Flinders B, Boone CM, Bosman IJ, Lusthof KL, Van Asten AC, Tygat J Heeren RMA. 2016. Consequences of Decontamination Procedures in Forensic Hair Analysis Using Metal-Assisted Secondary Ion Mass Spectrometry Analysis. Anal Chem. 88:3091–3097.
14 Wright J, Kenneally M, Edwards J, Walker S. 2017. Adverse Health Effects Associated with Living in a Former Methamphetamine Drug Laboratory-Victoria, Australia, 2015. MMWR. 65 (52): 1470–1473.
15 Tsanaclis L, Wicks J. 2008. Differentiation between Drug Use and Environmental Contamination when Testing for Drugs in Hair. Forensic Sci Int. 176:19–22.
16. de La Torre R, Civit E, Svaizer F, Lotti A, Gottardi M, Miozzo M. 2010. High throughput analysis of drugs of abuse in hair by combining purposely designed sample extraction compatible with immunometric methods used for drug testing in urine. Forensic Sci Int. 196:18–21.
17. Kamata T, Shima N, Sasaki K, Matsuta S, Takei S, Katagi M, Miki A, Zaitsu K, Nakanishi T, Sato T, Suzuki K, Tsuchihashi H. 2015. Time-course mass spectrometry imaging for depicting drug incorporation into hair. Anal Chem. 87:5476–81.
18. Grabenauer M, Bynum N, Moore K, White R, Mitchell J, Hayes E, Flegel R. 2018. Detection and quantification of codeine-6-glucuronide, hydromorphone-3-glucuronide, oxymorphone-3-glucuronide, morphine 3-glucuronide and morphine-6-glucuronide in human hair from opioid users by LC–MS–MS. J Anal Toxicol. 42(2):115–125.
19. Musshoff F, Thieme D, Schwarz G, Sachs H, Skopp G, Franz T. 2018. Determination of hydroxy metabolites of cocaine in hair samples for proof of consumption. Drug Test Anal. 10(4):681–688.
20. Scholz C, Quednow B, Herdener M, Kraemer T, Baumgartner M. 2019. Cocaine Hydroxy Metabolites in Hair: Indicators for Cocaine Use Versus External Contamination. J Anal Toxicol. 43(7):543–552.
21. Franz T, Scheufler F, Stein K, Uhl M, Dame T, Schwarz G, Sachs H, Skopp G, Musshoff F. 2018. Determination of hydroxy metabolites of cocaine from hair samples and comparison with street cocaine samples. Forensic Sci Int. 288:223–226.
22. Schaffer M, Cheng C, Chao O, Hill V, Matsui P. 2016. Analysis of cocaine and metabolites in hair: validation and application of measurement of hydroxycocaine metabolites as evidence of cocaine ingestion. Anal Bioanal Chem. 408(8):2043–54.
23. Castanet J, Ortonne JP. 1997. Hair melanin and hair color. In: Jolles P, Zahn

H, Hoecker H, editors. Formation and structure of human hair. Basel, Switzerland: Birkhauser Verlag. Pp. 209–225.
24. Rollins DE, Wilkins DG, Gygi SP, Slawson MH, Nagasawa PR. 1997. Testing for drugs of abuse in hair—experimental observations and indications for future research. Forensic Sci Rev. 9:24–35.
25. Borges CR, Martin SD, Meyer LJ, Wilkins DG, Rollins DE. 2002. Influx and efflux of amphetamine and N-acetylamphetamine in keratinocytes, pigmented melanocytes, and nonpigmented melanocytes. J. Pharm. Sci. 91:1523–1535.
26. Joseph RE Jr, Su TP, Cone EJ. 1996. In vitro binding studies of drugs to hair: influence of melanin and lipids on cocaine binding to Caucasoid and Africoid hair. J Anal Toxicol. 20:338–344.
27. Borges CR, Roberts JC, Wilkins DG, Rollins DE. 2003. Cocaine, benzoylecgonine, amphetamine, and N-acetylamphetamine binding to melanin subtypes. J Anal Toxicol. 27:125–134.
28. Borges R, Wilkins DG, Rollins DE. 2001. Amphetamine and N-acetylamphetamine incorporation into hair: an investigation of the potential role of drug basicity in hair color bias. J Anal Toxicol. 25:221–227.
29. Stout PR, Claffey DJ, Ruth JA. 2000. Incorporation and retention of radiolabeled S-(+)-and R-(-)-methamphetamine and S(+)- and R(-)-N-(n-butyl)-amphetamine in mouse hair after systemic administration. Drug Metab Dispos. 28:286–291.
30. Green SJ, Wilson JF. 1996. The effect of hair color on the incorporation of methadone into hair in the rat. J Anal Toxicol. 20:121–123.
31. Slawson MH, Wilkins DG, Rollins DE. 1998. The incorporation of drugs into hair: relationship of hair color and melanin concentration to phencyclidine incorporation. J Anal Toxicol. 22:406–413.
32. Henderson GL, Harkey MR, Zhou C, Jones RT, Jacob P III. 1998. Incorporation of isotopically labeled cocaine into human hair: race as a factor. J Anal Toxicol. 22:156–165.
33. Rollins DE, Wilkins DG, Krueger GG, Augsburger MP, Mizuno A, O'Neal C, Borges CR, Slawson MH. 2003. The effect of hair color on the incorporation of codeine into human hair. J Anal Toxicol. 27, 545–551.
34. Kronstrand R, Forstberg-Peterson S, Kagedal B, Ahlner J, Larson G. 1999. Codeine concentration in hair after oral administration is dependent on melanin content. Clin Chem. 45:1485–1494.
35. Mieczkowski T. 2003. Assessing the potential of a ''color effect'' for hair analysis of 11-nor-9-carboxy-delta(9)-tetrahydrocannabinol: analysis of a large sample of hair specimens. Life Sci. 74:463–469.
36. Mieczkowski T, Newel R. 2000. Statistical examination of hair color as a potential biasing factor in hair analysis. Forensic Sci. Int. 107:13–38.
37. Mieczkowski T, Newel R. 1993. An evaluation of patterns of racial bias in hair assays for cocaine: black and white arrestees compared. Forensic Sci. Int. 63:85–98.
38. Cuypers E, Flinders B., Bosman IJ, Lusthof KJ, Van Asten AC, Tytgat J, Heeren RMA. 2014. Hydrogen peroxide reactions on cocaine in hair using imaging mass spectrometry. Forens Sci Int. 242:103–110.
39. Tanaka S, Iio R, Takayama N., Hayakawa K. 2001. Identification of reaction products of methamphetamine and hydrogen peroxide in hair dye and decolorant treatments by high performance liquid chromatography/mass spectrometry. Biomed Chromatgr. 15;45–49.
40. Pritchett JS, Phinney KW. 2015. Influence of chemical straightening on the stability of drugs of abuse in hair. J Anal Toxicol. 39:13–16.
41. Baeck S, Han E, Chung H, Pyo M. 2011. Effects of repeated hair washing and a single hair dyeing on concentrations of methamphetamine and amphetamine in human hairs. Forens Sci Int. 206:77–80.
42. Kidwell DA, Smith FP, Shepherd AR. 2015. Ethnic hair care products may increase false positives in hair drug testing. Forens Sci Int. 257:160–164.
43. Hill V, Loni E, Cairns T, Sommer J, Schaffer M. 2014. Identification and analysis of damaged or porous hair. Drug Test Anal. 6:42–54.
44. European Workplace Drug Testing Society. 2015. European guidelines for workplace drug and alcohol testing in hair. 2015–11–01 Version 2.0. Retrieved from *http://www.ewdts.org/*.
45. Cooper GAA, Kronstrand R, Kintz P. 2012. Society of hair testing guidelines for drug testing in hair. Forens Sci Int. 218:20–24.
46. Hill V, Cairns T, Cheng CC, Schaffer M. 2005. Multiple aspects of hair analysis for opiates: methodology, clinical and workplace populations, codeine, and poppy seed ingestion. J Anal Toxicol. 29:696–703.

Summary

The Department believes that the benefits of pursuing the proposed Mandatory Guidelines using Hair outweigh the costs to include this additional specimen type in federal workplace drug testing programs. There is no requirement for federal agencies to use hair as part of their drug testing program. A federal agency may choose to use urine, oral fluid, hair or any combination of specimen types in accordance with the Mandatory Guidelines for each matrix in their program based on the agency's mission, its employees' duties, and the danger to the public health and safety or to national security that could result from an employee's failure to carry out the duties of his or her position.

Dated: July 20, 2020.

Elinore F. McCance-Katz,

Assistant Secretary for Mental Health and Substance Use, Substance Abuse and Mental Health Services Administration.

Approved: July 23, 2020.

Alex M. Azar II,

Secretary, Department of Health and Human Services.

■ The Mandatory Guidelines using Hair are hereby proposed to be adopted in accordance with section 503 of Public Law 100–71 and Executive Order 12564.

Mandatory Guidelines for Federal Workplace Drug Testing Programs Using Hair

Subpart A—Applicability

1.1 To whom do these Guidelines apply?
1.2 Who is responsible for developing and implementing these Guidelines?
1.3 How does a federal agency request a change from these Guidelines?
1.4 How are these Guidelines revised?
1.5 What do the terms used in these Guidelines mean?
1.6 What is an agency required to do to protect employee records?
1.7 What is a refusal to take a federally regulated drug test?
1.8 What are the potential consequences for refusing to take a federally regulated drug test?

Subpart B—Hair Specimens

2.1 What type of specimen may be collected?
2.2 Under what circumstances may a hair specimen be collected?
2.3 How is each hair specimen collected?
2.4 What amount of hair is collected?
2.5 How does the collector split the hair specimen collected?
2.6 When may an entity or individual release a hair specimen?

Subpart C—Hair Specimen Tests

3.1 Which tests are conducted on a hair specimen?
3.2 May a hair specimen be tested for additional drugs?
3.3 May any of the specimens be used for other purposes?
3.4 What are the drug test cutoff concentrations for hair?
3.5 May an HHS-certified laboratory perform additional drug and/or specimen validity tests on a specimen at the request of the Medical Review Officer (MRO)?
3.6 What criteria are used to report a hair specimen as adulterated?
3.7 What criteria are used to report a hair specimen as substituted?
3.8 What criteria are used to report an invalid result for a hair specimen?

Subpart D—Collectors

4.1 Who may collect a specimen?
4.2 Who may not collect a specimen?
4.3 What are the requirements to be a collector?
4.4 What are the requirements to be a trainer for collectors?

4.5 What must a federal agency do before a collector is permitted to collect a specimen?

Subpart E—Collection Sites

5.1 Where can a collection for a drug test take place?
5.2 What are the requirements for a collection site?
5.3 Where must collection site records be stored?
5.4 How long must collection site records be stored?
5.5 How does the collector ensure the security and integrity of a specimen at the collection site?
5.6 What are the privacy requirements when collecting a hair specimen?

Subpart F—Federal Drug Testing Custody and Control Form

6.1 What federal form is used to document custody and control?
6.2 What happens if the correct OMB-approved Federal CCF is not available or is not used?

Subpart G—Hair Specimen Collection Materials

7.1 What is used to collect a hair specimen?
7.2 What are the requirements for hair collection materials?
7.3 What are the minimum performance requirements for hair collection materials?

Subpart H—Hair Specimen Collection Procedure

8.1 What privacy must the donor be given when providing a hair specimen?
8.2 What must the collector ensure at the collection site before starting a hair specimen collection?
8.3 What are the preliminary steps in the hair specimen collection procedure?
8.4 What steps does the collector take in the collection procedure before the donor provides a hair specimen?
8.5 What steps does the collector take during and after the hair specimen collection procedure?
8.6 What procedure is used when the donor is unable to provide a hair specimen?
8.7 If the donor is unable to provide a hair specimen, may another specimen type be collected for testing?
8.8 How does the collector prepare the hair specimens?
8.9 How does the collector report a donor's refusal to test?
8.10 What are a federal agency's responsibilities for a collection site?

Subpart I—HHS Certification of Laboratories

9.1 Who has the authority to certify laboratories to test hair specimens for federal agencies?
9.2 What is the process for a laboratory to become HHS-certified?
9.3 What is the process for a laboratory to maintain HHS certification?
9.4 What is the process when a laboratory does not maintain its HHS certification?
9.5 What are the qualitative and quantitative specifications of performance testing (PT) samples?
9.6 What are the PT requirements for an applicant laboratory that seeks to perform hair testing?
9.7 What are the PT requirements for an HHS-certified hair laboratory?
9.8 What are the inspection requirements for an applicant laboratory?
9.9 What are the maintenance inspection requirements for an HHS-certified laboratory?
9.10 Who can inspect an HHS-certified laboratory and when may the inspection be conducted?
9.11 What happens if an applicant laboratory does not satisfy the minimum requirements for either the PT program or the inspection program?
9.12 What happens if an HHS-certified laboratory does not satisfy the minimum requirements for either the PT program or the inspection program?
9.13 What factors are considered in determining whether revocation of a laboratory's HHS certification is necessary?
9.14 What factors are considered in determining whether to suspend a laboratory's HHS certification?
9.15 How does the Secretary notify an HHS-certified laboratory that action is being taken against the laboratory?
9.16 May a laboratory that had its HHS certification revoked be recertified to test federal agency specimens?
9.17 Where is the list of HHS-certified laboratories published?

Subpart J—Blind Samples Submitted by an Agency

10.1 What are the requirements for federal agencies to submit blind samples to HHS-certified laboratories?
10.2 What are the requirements for blind samples?
10.3 How is a blind sample submitted to an HHS-certified laboratory?
10.4 What happens if an inconsistent result is reported for a blind sample?

Subpart K—Laboratory

11.1 What must be included in the HHS-certified laboratory's standard operating procedure manual?
11.2 What are the responsibilities of the responsible person (RP)?
11.3 What scientific qualifications must the RP have?
11.4 What happens when the RP is absent or leaves an HHS-certified laboratory?
11.5 What qualifications must an individual have to certify a result reported by an HHS-certified laboratory?
11.6 What qualifications and training must other personnel of an HHS-certified laboratory have?
11.7 What security measures must an HHS-certified laboratory maintain?
11.8 What are the laboratory chain of custody requirements for specimens and aliquots?
11.9 How must an HHS-certified laboratory process an alternate specimen that was collected at the same time as a hair specimen?
11.10 What amount of hair is tested?
11.11 What are the requirements for an initial drug test?
11.12 What must an HHS-certified laboratory do to validate an initial drug test?
11.13 What are the batch quality control requirements when conducting an initial drug test?
11.14 What are the requirements for a confirmatory drug test?
11.15 What must an HHS-certified laboratory do to validate a confirmatory drug test?
11.16 What are the batch quality control requirements when conducting a confirmatory drug test?
11.17 What are the analytical and quality control requirements for conducting specimen validity tests?
11.18 What must an HHS-certified laboratory do to validate a specimen validity test?
11.19 What are the requirements for an HHS-certified laboratory to report a test result?
11.20 How long must an HHS-certified laboratory retain specimens?
11.21 How long must an HHS-certified laboratory retain records?
11.22 What statistical summary reports must an HHS-certified laboratory provide for hair testing?
11.23 What HHS-certified laboratory information is available to a federal agency?
11.24 What HHS-certified laboratory information is available to a federal employee?
11.25 What types of relationships are prohibited between an HHS-certified laboratory and an MRO?

Subpart L—Instrumented Initial Test Facility (IITF)

12.1 May an IITF test hair specimens for a federal agency's workplace drug testing program?

Subpart M—Medical Review Officer (MRO)

13.1 Who may serve as an MRO?
13.2 How are nationally recognized entities or subspecialty boards that certify MROs approved?
13.3 What training is required before a physician may serve as an MRO?
13.4 What are the responsibilities of an MRO?
13.5 What must an MRO do when reviewing a hair specimen's test results?
13.6 What action does the MRO take when the collector reports that the donor did not provide a sufficient amount of hair for a drug test?
13.7 Who may request a test of a split (B) hair specimen?
13.8 How does an MRO report a primary (A) specimen test result to an agency?
13.9 What types of relationships are prohibited between an MRO and an HHS-certified laboratory?

Subpart N—Split Specimen Tests

14.1 When may a split (B) hair specimen be tested?
14.2 How does an HHS-certified laboratory test a split (B) hair specimen when the primary (A) specimen was reported adulterated?

14.3 How does an HHS-certified laboratory test a split (B) hair specimen when the primary (A) specimen was reported substituted?
14.4 Who receives the split (B) specimen result?
14.5 What action(s) does an MRO take after receiving the split (B) hair specimen result from the second HHS-certified laboratory?
14.6 How does an MRO report a split (B) specimen test result to an agency?
14.7 How long must an HHS-certified laboratory retain a split (B) specimen?

Subpart O—Criteria for Rejecting a Specimen for Testing

15.1 What discrepancies require an HHS-certified laboratory to report a specimen as rejected for testing?
15.2 What discrepancies require an HHS-certified laboratory to report a specimen as rejected for testing unless the discrepancy is corrected?
15.3 What discrepancies are not sufficient to require an HHS-certified laboratory to reject a hair specimen for testing or an MRO to cancel a test?
15.4 What discrepancies may require an MRO to cancel a test?

Subpart P—Laboratory Suspension/ Revocation Procedures

16.1 When may the HHS certification of a laboratory be suspended?
16.2 What definitions are used for this subpart?
16.3 Are there any limitations on issues subject to review?
16.4 Who represents the parties?
16.5 When must a request for informal review be submitted?
16.6 What is an abeyance agreement?
16.7 What procedures are used to prepare the review file and written argument?
16.8 When is there an opportunity for oral presentation?
16.9 Are there expedited procedures for review of immediate suspension?
16.10 Are any types of communications prohibited?
16.11 How are communications transmitted by the reviewing official?
16.12 What are the authority and responsibilities of the reviewing official?
16.13 What administrative records are maintained?
16.14 What are the requirements for a written decision?
16.15 Is there a review of the final administrative action?

Subpart A—Applicability

Section 1.1 To whom do these Guidelines apply?

(a) These Guidelines apply to:

(1) Executive Agencies as defined in 5 U.S.C. 105;

(2) The Uniformed Services, as defined in 5 U.S.C. 2101(3) (but excluding the Armed Forces as defined in 5 U.S.C. 2101(2));

(3) Any other employing unit or authority of the federal government except the United States Postal Service, the Postal Rate Commission, and employing units or authorities in the Judicial and Legislative Branches; and

(4) The Intelligence Community, as defined by Executive Order 12333, is subject to these Guidelines only to the extent agreed to by the head of the affected agency;

(5) Laboratories that provide drug testing services to the federal agencies;

(6) Collectors who provide specimen collection services to the federal agencies; and

(7) Medical Review Officers (MROs) who provide drug testing review and interpretation of results services to the federal agencies.

(b) These Guidelines do not apply to drug testing under authority other than Executive Order 12564, including testing of persons in the criminal justice system, such as arrestees, detainees, probationers, incarcerated persons, or parolees.

Section 1.2 Who is responsible for developing and implementing these Guidelines?

(a) Executive Order 12564 and Public Law 100–71 require the Department of Health and Human Services (HHS) to establish scientific and technical guidelines for federal workplace drug testing programs.

(b) The Secretary has the responsibility to implement these Guidelines.

Section 1.3 How does a federal agency request a change from these Guidelines?

(a) Each federal agency must ensure that its workplace drug testing program complies with the provisions of these Guidelines unless a waiver has been obtained from the Secretary.

(b) To obtain a waiver, a federal agency must submit a written request to the Secretary that describes the specific change for which a waiver is sought and a detailed justification for the change.

Section 1.4 How are these Guidelines revised?

(a) To ensure the full reliability and accuracy of specimen tests, the accurate reporting of test results, and the integrity and efficacy of federal drug testing programs, the Secretary may make changes to these Guidelines to reflect improvements in the available science and technology.

(b) The changes will be published in final as a notice in the **Federal Register**.

Section 1.5 What do the terms used in these Guidelines mean?

The following definitions are adopted:

Accessioner. The individual who signs the Federal Drug Testing Custody and Control Form at the time of specimen receipt at the HHS-certified laboratory or (for urine) the HHS-certified IITF.

Adulterated Specimen. A specimen that has been altered, as evidenced by test results showing either a substance that is not a normal constituent for that type of specimen or showing an abnormal concentration of a normal constituent (*e.g.,* nitrite in urine).

Aliquot. A portion of a specimen used for testing.

Alternate Responsible Person. The person who assumes professional, organizational, educational, and administrative responsibility for the day-to-day management of the HHS-certified laboratory when the responsible person is unable to fulfill these obligations.

Alternate Technology Initial Drug Test. An initial drug test using technology other than immunoassay to differentiate negative specimens from those requiring further testing.

Artificial hair. A weave or other synthetic forms of hair, as well as animal substitutes.

Batch. A number of specimens or aliquots handled concurrently as a group.

Biomarker. An endogenous substance used to validate a biological specimen.

Blind Sample. A sample submitted to an HHS-certified test facility for quality assurance purposes, with a fictitious identifier, so that the test facility cannot distinguish it from a donor specimen.

Calibrator. A sample of known content and analyte concentration prepared in the appropriate matrix used to define expected outcomes of a testing procedure. The test result of the calibrator is verified to be within established limits prior to use.

Cancelled Test. The result reported by the MRO to the federal agency when a specimen has been reported to the MRO as an invalid result (and the donor has no legitimate explanation), the specimen has been rejected for testing, when a hair specimen has been reported as positive and the MRO directs testing of the alternate specimen for the donor, when a split specimen fails to reconfirm, or when the MRO determines that a fatal flaw or unrecovered correctable flaw exists in the forensic records (as described in Sections 15.1 and 15.2).

Carryover. The effect that occurs when a sample result (*e.g.,* drug concentration) is affected by a preceding sample during the preparation or analysis of a sample.

Certifying Scientist (CS). The individual responsible for verifying the chain of custody and scientific

reliability of a test result reported by an HHS-certified laboratory.

Certifying Technician (CT). The individual responsible for verifying the chain of custody and scientific reliability of negative, rejected for testing, and (for urine) negative/dilute results reported by an HHS-certified laboratory or (for urine) an HHS-certified IITF.

Chain of Custody (COC) Procedures. Procedures that document the integrity of each specimen or aliquot from the point of collection to final disposition.

Chain of Custody Documents. Forms used to document the control and security of the specimen and all aliquots. The document may account for an individual specimen, aliquot, or batch of specimens/aliquots and must include the name and signature of each individual who handled the specimen(s) or aliquot(s) and the date and purpose of the handling.

Collection Container. A receptacle used to collect a donor's drug test specimen.

Collection Site. The location where specimens are collected.

Collector. A person trained to instruct and assist a donor in providing a specimen.

Confirmatory Drug Test. A second analytical procedure performed on a separate aliquot of a specimen to identify and quantify a specific drug or drug metabolite.

Confirmatory Specimen Validity Test. A second test performed on a separate aliquot of a specimen to further support an initial specimen validity test result.

Control. A sample used to evaluate whether an analytical procedure or test is operating within predefined tolerance limits.

Cutoff. The analytical value (*e.g.,* drug or drug metabolite concentration) used as the decision point to determine a result (*e.g.,* negative, positive, adulterated, invalid, or substituted) or the need for further testing.

Decontamination. The removal of external contamination (*i.e.,* environmentally-deposited drug) in or on a hair specimen.

Donor. The individual from whom a specimen is collected.

External Service Provider. An independent entity that performs services related to federal workplace drug testing on behalf of a federal agency, a collector/collection site, an HHS-certified laboratory, a Medical Review Officer (MRO), or, for urine, an HHS-certified Instrumented Initial Test Facility (IITF).

Failed to Reconfirm. The result reported for a split (B) specimen when a second HHS-certified laboratory is unable to corroborate the result reported for the primary (A) specimen.

False Hair. Hair that is not the donor's hair. False hair may be artificial or human in origin.

Federal Drug Testing Custody and Control Form (Federal CCF). The Office of Management and Budget (OMB) approved form that is used to document the collection and chain of custody of a specimen from the time the specimen is collected until it is received by the test facility (*i.e.,* HHS-certified laboratory or, for urine, HHS-certified IITF). It may be a paper (hardcopy), electronic, or combination electronic and paper format (hybrid). The form may also be used to report the test result to the Medical Review Officer.

HHS. The Department of Health and Human Services.

Initial Drug Test. An analysis used to differentiate negative specimens from those requiring further testing.

Initial Specimen Validity Test. The first analysis used to determine if a specimen is invalid, adulterated, or substituted.

Instrumented Initial Test Facility (IITF). A permanent location where (for urine) initial testing, reporting of results, and recordkeeping are performed under the supervision of a responsible technician.

Invalid Result. The result reported by an HHS-certified laboratory in accordance with the criteria established in Section 3.8 when a positive, negative, adulterated, or substituted result cannot be established for a specific drug or specimen validity test.

Laboratory. A permanent location where initial and confirmatory drug testing, reporting of results, and recordkeeping are performed under the supervision of a responsible person.

Limit of Detection. The lowest concentration at which the analyte (*e.g.,* drug or drug metabolite) can be identified.

Limit of Quantification. For quantitative assays, the lowest concentration at which the identity and concentration of the analyte (*e.g.,* drug or drug metabolite) can be accurately established.

Lot. A number of units of an item (*e.g.,* reagents, quality control material) manufactured from the same starting materials within a specified period of time for which the manufacturer ensures that the items have essentially the same performance characteristics and expiration date.

Medical Review Officer (MRO). A licensed physician who reviews, verifies, and reports a specimen test result to the federal agency.

Negative Result. The result reported by an HHS-certified laboratory or (for urine) an HHS-certified IITF to an MRO when a specimen contains no drug and/or drug metabolite; or the concentration of the drug or drug metabolite is less than the cutoff for that drug or drug class.

Performance Testing (PT) Sample. A program-generated sample sent to a laboratory or (for urine) to an IITF to evaluate performance.

Positive Result. The result reported by an HHS-certified laboratory when a specimen contains a drug or drug metabolite equal to or greater than the confirmation cutoff concentration.

Reconfirmed. The result reported for a split (B) specimen when the second HHS-certified laboratory corroborates the original result reported for the primary (A) specimen.

Rejected for Testing. The result reported by an HHS-certified laboratory or (for urine) an HHS-certified IITF when no tests are performed on a specimen because of a fatal flaw or an unrecovered correctable error (see Sections 15.1 and 15.2)

Responsible Person (RP). The person who assumes professional, organizational, educational, and administrative responsibility for the day-to-day management of an HHS-certified laboratory.

Sample. A performance testing sample, calibrator or control used during testing, or a representative portion of a donor's specimen.

Secretary. The Secretary of the U.S. Department of Health and Human Services.

Specimen. Fluid or material collected from a donor at the collection site for the purpose of a drug test.

Specimen guide. An item that holds the hair specimen as positioned by the collector, and has an indication of the orientation (*i.e.,* root or distal end) of the hair specimen collected.

Split Specimen Collection (for Hair). A collection in which the specimen collected is divided into a primary (A) specimen and a split (B) specimen, which are independently sealed in the presence of the donor.

Standard. Reference material of known purity or a solution containing a reference material at a known concentration.

Substituted Specimen. A specimen with physical or chemical characteristics that are not consistent with those observed in human hair.

Wash procedures. A rinse with organic solvents to remove oils and residue on the hair prior to initial testing.

Unique metabolite. A drug metabolite present in a hair specimen only as a result of biotransformation following drug use, and whose detection by a confirmatory drug test distinguishes drug use from external contamination. A unique metabolite does not occur as a contaminant in licit and illicit drug products and is not produced from the drug as an artifact and only results from biotransformation following drug use.

Section 1.6 What is an agency required to do to protect employee records?

Consistent with 5 U.S.C. 552a and 48 CFR 24.101–24.104, all agency contracts with laboratories, collectors, and MROs must require that they comply with the Privacy Act, 5 U.S.C. 552a. In addition, the contracts must require compliance with employee access and confidentiality provisions of Section 503 of Public Law 100–71. Each federal agency must establish a Privacy Act System of Records or modify an existing system or use any applicable Government-wide system of records to cover the records of employee drug test results. All contracts and the Privacy Act System of Records must specifically require that employee records be maintained and used with the highest regard for employee privacy.

The Health Insurance Portability and Accountability Act of 1996 (HIPAA) Privacy Rule (Rule), 45 CFR parts 160 and 164, Subparts A and E, may be applicable to certain health care providers with whom a federal agency may contract. If a health care provider is a HIPAA covered entity, the provider must protect the individually identifiable health information it maintains in accordance with the requirements of the Rule, which includes not using or disclosing the information except as permitted by the Rule and ensuring there are reasonable safeguards in place to protect the privacy of the information. For more information regarding the HIPAA Privacy Rule, please visit *http://www.hhs.gov/ocr/hipaa.*

Section 1.7 What is a refusal to take a federally regulated drug test?

(a) As a donor for a federally regulated drug test, you have refused to take a federally regulated drug test if you:

(1) Fail to appear for any test (except a pre-employment test) within a reasonable time, as determined by the federal agency, consistent with applicable agency regulations, after being directed to do so by the federal agency;

(2) Fail to remain at the collection site until the collection process is complete with the exception of a donor who leaves the collection site before the collection process begins for a pre-employment test as described in Section 8.5(d);

(3) Fail to provide a hair specimen for any drug test required by these Guidelines or federal agency regulations with the exception of a donor who leaves the collection site before the collection process begins for a pre-employment test as described in Section 8.5(d); or a donor who is unable to provide a sufficient amount of hair for faith-based or medical reasons, or due to an insufficient amount or length of hair; or when the collector identifies lice or a similar infestation in the hair.

(4) Fail or decline to participate in an alternate specimen collection (*e.g.,* urine, oral fluid) as directed by the federal agency or collector (*i.e.,* as described in Section 8.5);

(5) Fail to cooperate with any part of the testing process (*e.g.,* disrupt the collection process; refuse to allow the collector to collect a sufficient amount of hair; fail to provide a split specimen);

(6) Bring materials to the collection site for the purpose of adulterating or substituting the specimen;

(7) Attempt to adulterate or substitute the specimen; or

(8) Admit to the collector or MRO that you have adulterated or substituted the specimen.

Section 1.8 What are the potential consequences for refusing to take a federally regulated drug test?

(a) As a federal agency employee or applicant, a refusal to take a test may result in the initiation of disciplinary or adverse action, up to and including removal from, or non-selection for, federal employment.

(b) When a donor has refused to participate in a part of the collection process, the collector must terminate the collection process and take action as described in Section 8.9; immediately notify the federal agency's designated representative by any means (*e.g.,* telephone or secure facsimile [fax] machine) that ensures that the refusal notification is immediately received, document the refusal on the Federal CCF, sign and date the Federal CCF, and send all copies of the Federal CCF to the federal agency's designated representative.

(c) When documenting a refusal to test during the verification process as described in Sections 13.4 and 13.5, the MRO must complete the MRO copy of the Federal CCF to include:

(1) Checking the refusal to test box;

(2) Providing a reason for the refusal in the remarks line; and

(3) Signing and dating the MRO copy of the Federal CCF.

Subpart B—Hair Specimens

Section 2.1 What type of specimen may be collected?

a. Only specimen types authorized by Mandatory Guidelines for Federal Workplace Drug Testing Programs may be collected.

b. A federal agency may collect hair and/or an alternate specimen type for its workplace drug testing program, but may not implement hair testing as the exclusive means of drug testing. A federal agency using hair testing must follow these Guidelines.

c. A federal agency that collects hair specimens for its workplace drug testing program must also authorize an alternate specimen type to be collected either:

(1) At the time that a donor's hair specimen is collected, or

(2) at the direction of the MRO, following verification of a hair test as positive or invalid, or when the laboratory rejected the hair specimen.

Alternate specimens collected under Section 2.1(c)(1) and (2) can be tested only if an MRO directs, in writing, that such specimens be tested and following the MRO's receipt and verification of a positive, invalid, or rejected hair test result from a laboratory (see Section 13.5).

d. A federal agency that collects hair specimens for its workplace drug testing program must also authorize the collection of one or more alternative specimen types when a donor is unable to provide a sufficient amount of hair for faith-based or medical reasons, or due to an insufficient amount or length of hair.

Section 2.2 Under what circumstances may a hair specimen be collected?

A federal agency may only collect a hair specimen for federal agency pre-employment and random testing purposes, and may not use hair specimens for reasonable suspicion/cause, post accident, return to duty, or follow-up testing purposes (*i.e.,* for purposes other than pre-employment or random testing).

Section 2.3 How is each hair specimen collected?

Each hair specimen is collected as a split specimen as described in Sections 2.5 and 8.8.

Section 2.4 What amount of hair is collected?

At least 100 mg of hair is collected, as described in Section 8.5.

Section 2.5 How does the collector split the hair specimen collected?

The collector subdivides the collected hair into 2 specimens designated as ''A'' (primary) and ''B'' (split) as described in Section 8.5.

Section 2.6 When may an entity or individual release a hair specimen?

Entities and individuals subject to these Guidelines under Section 1.1 may not release specimens collected pursuant to Executive Order 12564, Public Law 100–71 and these Guidelines to donors or their designees. Specimens also may not be released to any other entity or individual unless expressly authorized by these Guidelines or by applicable federal law. This section does not prohibit a donor's request to have a split (B) specimen tested in accordance with Section 13.9.

Subpart C—Hair Drug and Specimen Validity Tests

Section 3.1 Which tests are conducted on a hair specimen?

A federal agency:

(a) Must ensure that each specimen is tested for marijuana and cocaine as provided under Section 3.4;

(b) Is authorized to test each specimen for opioids, amphetamines, and phencyclidine, as provided under Section 3.4;

(c) Is authorized to test hair specimens for damage that may affect drug test results;

(d) Is authorized upon a Medical Review Officer's request to test a hair specimen to determine specimen validity, using, for example, a test for a biomarker or a test for a specific adulterant; and

(e) May perform additional testing if a specimen exhibits abnormal characteristics, causes reactions or responses characteristic of an adulterant during initial or confirmatory drug tests (*e.g.,* non-recovery of internal standard, unusual response), or contains an unidentified substance that interferes with the confirmatory analysis.

Section 3.2 May a hair specimen be tested for additional drugs?

For approval to routinely test for any drugs listed in Schedule I or II of the Controlled Substances Act that are not listed in Section 3.1, a federal agency must petition the Secretary in writing. Such approval must be limited to the use of the appropriate science and technology. If an initial test procedure is not available upon request for a Schedule I or Schedule II drug, the HHS-certified laboratory must test for the drug using the confirmatory analytical method. For any specimen with a positive result, the laboratory must test a separate aliquot of the specimen in a separate testing batch using the same confirmatory analytical method. Additionally, the split (B) specimen will be available for testing if the donor requests a retest at another HHS-certified laboratory.

Section 3.3 May any of the specimens be used for other purposes?

(a) Specimens collected pursuant to Executive Order 12564, Public Law 100–71, and these Guidelines must only be tested for drugs and to determine their validity in accordance with Subpart C of these Guidelines. Use of specimens by donors, their designees or any other entity, for other purposes (*e.g.,* deoxyribonucleic acid, DNA, testing) is prohibited unless authorized in accordance with applicable federal law.

(b) These Guidelines are not intended to prohibit federal agencies, specifically authorized by law to test a specimen for additional classes of drugs in its workplace drug testing program.

Section 3.4 What are the drug test cutoff concentrations for hair?

Initial test analyte	Initial test cutoff [1]	Confirmatory test analyte	Confirmatory test cutoff concentration
Marijuana Metabolites (THCA) [2]	[3] 1 pg/mg	THCA	0.05 pg/mg
Cocaine/Benzoylecgonine	[3] 500 pg/mg	Cocaine Benzoylecgonine	500 pg/mg 50 pg/mg
Codeine/	200 pg/mg	Codeine	200 pg/mg
Morphine/		Morphine	200 pg/mg
6-Acetylmorphine		6-Acetylmorphine	200 pg/mg
Hydrocodone/	200 pg/mg	Hydrocodone	200 pg/mg
Hydromorphone		Hydromorphone	200 pg/mg
Oxycodone/	200 pg/mg	Oxycodone	200 pg/mg
Oxymorphone		Oxymorphone	200 pg/mg
Phencyclidine	300 pg/mg	Phencyclidine	300 pg/mg
Amphetamine/	[3] 500 pg/mg	Amphetamine	300 pg/mg
Methamphetamine [4]		Methamphetamine	300 pg/mg
MDMA [5]/MDA [6]	[3] 500 pg/mg	MDMA	300 pg/mg
		MDA	300 pg/mg

[1] *For grouped analytes (i.e., two or more analytes that are in the same drug class and have the same initial test cutoff):*

Immunoassay: The test must be calibrated with one analyte from the group identified as the target analyte. The cross-reactivity of the immunoassay to the other analyte(s) within the group must be 80 percent or greater; if not, separate immunoassays must be used for the analytes within the group.

Alternate technology: Either one analyte or analytes as grouped in the table above must be used for calibration, depending on the technology. At least one analyte within the group must have a concentration equal to or greater than the initial test cutoff or, alternatively, the sum of the analytes present (*i.e.,* equal to or greater than the laboratory's validated limit of quantification) must be equal to or greater than the initial test cut-off.

[2] An immunoassay must be calibrated with the target analyte, L-Δ-9-tetrahydrocannabinol-9-carboxylic acid (THCA).

[3] *Alternate technology (THCA):* The confirmatory test cutoff (*i.e.,* 0.05 pg/mg) must be used for an alternate technology initial test that is specific for THCA).

[4] An immunoassay must be calibrated with the target analyte, D-amphetamine or D-methamphetamine.

[5] Methylenedioxymethamphetamine (MDMA).

[6] Methylenedioxyamphetamine (MDA).

Section 3.5 May an HHS-certified laboratory perform additional drug and/or specimen validity tests on a specimen at the request of the Medical Review Officer (MRO)?

An HHS-certified laboratory is authorized to perform additional drug and/or specimen validity tests on a case-by-case basis as necessary to provide information that the MRO would use to report a verified drug test result (*e.g.,* specimen validity tests using biomarkers). An HHS-certified laboratory is not authorized to routinely perform additional drug and/or specimen validity tests at the request of an MRO without prior authorization from the Secretary or designated HHS representative, with the exception of the determination of D, L stereoisomers of amphetamine and methamphetamine. All tests must meet appropriate validation and quality control requirements in accordance with these Guidelines.

Section 3.6 What criteria are used to report a hair specimen as adulterated?

An HHS-certified laboratory reports a hair specimen as adulterated when the presence of an adulterant is verified using an initial test on the first aliquot and a different confirmatory test on the second aliquot.

Section 3.7 What criteria are used to report a hair specimen as substituted?

An HHS-certified laboratory documents and reports a hair specimen as substituted if it has physical or chemical characteristics inconsistent with those observed in human hair. Such documentation should briefly describe the physical or chemical characteristics that are inconsistent with human hair.

Section 3.8 What criteria are used to report an invalid result for a hair specimen?

An HHS-certified laboratory reports a primary (A) hair specimen as an invalid result when:

(a) Interference occurs on the initial drug tests on two separate aliquots (*i.e.,* valid initial drug test results cannot be obtained);

(b) Interference with the confirmatory drug assay occurs on two separate aliquots of the specimen and the laboratory is unable to identify the interfering substance;

(c) The specimen has been tested and the color of the primary (A) and the split (B) specimens are clearly different;

(d) The laboratory determines the hair is damaged (*i.e.,* using a validated method) to the extent that the drug test result may be affected; or

(e) The laboratory obtains a positive confirmatory drug test result and is unable to definitively remove external contamination from the specimen (*i.e.,* using a validated decontamination procedure).

Subpart D—Collectors

Section 4.1 Who may collect a specimen?

(a) A collector who has been trained to collect hair specimens in accordance with these Guidelines.

(b) The immediate supervisor of a federal employee donor may only collect that donor's specimen when no other collector is available. The supervisor must be a trained collector.

(c) The hiring official of a federal agency applicant may only collect that federal agency applicant's specimen when no other collector is available. The hiring official must be a trained collector.

Section 4.2 Who may not collect a specimen?

(a) A federal agency employee who is in a testing designated position and subject to the federal agency drug testing rules must not be a collector for co-workers in the same testing pool or who work together with that employee on a daily basis.

(b) A federal agency applicant or employee must not collect his or her own drug testing specimen.

(c) An employee working for an HHS-certified laboratory must not act as a collector if the employee could link the identity of the donor to the donor's drug test result.

(d) To avoid a potential conflict of interest, a collector must not be related to the employee (*e.g.,* spouse, ex-spouse, relative) or a close personal friend (*e.g.,* fiancée).

Section 4.3 What are the requirements to be a collector?

(a) An individual may serve as a collector if they fulfill the following conditions:

(1) Is knowledgeable about the collection procedure described in these Guidelines;

(2) Is knowledgeable about any guidance provided by the federal agency's Drug-free Workplace Program and additional information provided by the Secretary relating to these Guidelines;

(3) Is trained and qualified to collect a hair specimen. Training must include the following:

(i) All steps necessary to complete a hair collection;

(ii) Completion and distribution of the Federal CCF;

(iii) Problem collections;

(iv) Fatal flaws, correctable flaws, and how to correct problems in collections; and

(v) The collector's responsibility for maintaining the integrity of the collection process, ensuring the privacy of the donor, ensuring the security of the specimen, and avoiding conduct or statements that could be viewed as offensive or inappropriate.

(4) Has demonstrated proficiency in collections by completing five consecutive error-free mock collections.

(i) The five mock collections must include two uneventful collection scenarios, one insufficient specimen quantity scenario, one scenario in which the donor refuses to sign the Federal CCF, and one scenario in which the donor refuses to initial the specimen container tamper-evident seal.

(ii) A qualified trainer for collectors must monitor and evaluate the individual being trained, in person or by a means that provides real-time observation and interaction between the trainer and the trainee, and the trainer must attest in writing that the mock collections are ''error-free.''

(b) A trained collector must complete refresher training at least every five years that includes the requirements in paragraph (a) of this section.

(c) The collector must maintain the documentation of his or her training and provide that documentation to a federal agency when requested.

(d) An individual may not collect specimens for a federal agency until his or her training as a collector has been properly documented.

Section 4.4 What are the requirements to be a trainer for collectors?

(a) Individuals are considered qualified trainers for collectors and may train others to collect hair specimens when they have completed the following:

(1) Qualified as a trained collector and regularly conducted hair drug test collections for a period of at least one year or

(2) Completed a ''train the trainer'' course given by an organization (*e.g.,* manufacturer, private entity, contractor, federal agency).

(b) A qualified trainer for collectors must complete refresher training at least every five years in accordance with the collector requirements in Section 4.3(a).

(c) A qualified trainer for collectors must maintain the documentation of his or her training and provide that documentation to a federal agency when requested.

Section 4.5 What must a federal agency do before a collector is permitted to collect a specimen?

A federal agency must ensure the following:

(a) The collector has satisfied the requirements described in Section 4.3;

(b) The collector, who may be self-employed, or an organization (*e.g.,* third party administrator that provides a collection service, collector training company, federal agency that employs its own collectors) maintains a copy of the training record(s); and

(c) The collector has been provided the name and telephone number of the federal agency representative.

Subpart E—Collection Sites

Section 5.1 Where can a collection for a drug test take place?

(a) A collection site may be a permanent or temporary facility located either at the work site or at a remote site.

(b) In the event that an agency-designated collection site is not accessible and there is an immediate requirement to collect a hair specimen, another site may be used for the collection, providing the collection is performed by a trained hair specimen collector.

Section 5.2 What are the requirements for a collection site?

The facility used as a collection site must have the following:

(a) Provisions to ensure donor privacy during the collection (as described in Section 8.1);

(b) A suitable and clean surface area that is not accessible to the donor for handling the specimens and completing the required paperwork;

(c) A secure temporary storage area to maintain specimens until the specimen is transferred to an HHS-certified laboratory;

(d) A restricted access area where only authorized personnel may be present during the collection;

(e) A restricted access area for the storage of collection supplies; and

(f) A restricted access area for the secure storage of records.

Section 5.3 Where must collection site records be stored?

Collection site records must be stored at a secure site designated by the collector or the collector's employer.

Section 5.4 How long must collection site records be stored?

Collection site records (*e.g.,* collector copies of the OMB-approved Federal CCF) must be stored securely for a minimum of 2 years. The collection site may convert hardcopy records to electronic records for storage and discard the hardcopy records after 6 months.

Section 5.5 How does the collector ensure the security and integrity of a specimen at the collection site?

(a) A collector must do the following to maintain the security and integrity of a specimen:

(1) Not allow unauthorized personnel to enter the collection area during the collection procedure;

(2) Perform only one donor collection at a time;

(3) Restrict access to collection supplies before, during, and after collection;

(4) Ensure that only the collector and the donor are allowed to handle the unsealed specimen;

(5) Ensure the chain of custody process is maintained and documented throughout the entire collection, storage, and transport procedures;

(6) Ensure that the Federal CCF is completed and distributed as required; and

(7) Ensure that specimens transported to an HHS-certified laboratory are sealed and placed in transport containers designed to minimize the possibility of damage during shipment (*e.g.,* specimen boxes, padded mailers, or other suitable shipping container), and those containers are securely sealed to eliminate the possibility of undetected tampering.

(b) Couriers, express carriers, and postal service personnel are not required to document chain of custody since specimens are sealed in packages that would indicate tampering during transit to the HHS-certified laboratory.

Section 5.6 What are the privacy requirements when collecting a hair specimen?

The collector collects hair from the donor (as described in Section 8.5). The donor must be allowed privacy while the collector obtains the hair specimen. Collections must be performed at a site that provides reasonable privacy (as described in Section 8.1).

Subpart F—Federal Drug Testing Custody and Control Form

Section 6.1 What federal form is used to document custody and control?

The OMB-approved Federal CCF must be used to document custody and control of each specimen at the collection site.

Section 6.2 What happens if the correct OMB-approved Federal CCF is not available or is not used?

(a) The use of a non-federal CCF or an expired Federal CCF is not, by itself, a reason for the HHS-certified laboratory to automatically reject the specimen for testing or for the MRO to cancel the test.

(b) If the collector does not use the correct OMB-approved Federal CCF, the collector must document that it is a federal agency specimen collection and provide the reason that the incorrect form was used. Based on the information provided by the collector, the HHS-certified laboratory must handle and test the specimen as a federal agency specimen.

(c) If the HHS-certified laboratory or MRO discovers that the collector used an incorrect form, the laboratory or MRO must obtain a memorandum for the record from the collector describing the reason the incorrect form was used. If a memorandum for the record cannot be obtained, the laboratory reports a rejected for testing result to the MRO and the MRO cancels the test. The HHS-certified laboratory must wait at least 5 business days while attempting to obtain the memorandum before reporting a rejected for testing result to the MRO.

Subpart G—Hair Specimen Collection Materials

Section 7.1 What is used to collect a hair specimen?

Collection materials include a means (*i.e.,* single-use or reusable scissors) to cut the hair, individually packaged isopropyl alcohol wipe (*i.e.,* to clean reusable scissors), two specimen guides (items that hold the hair specimen as positioned by the collector), and two sealable collection containers (*e.g.,* envelopes) labelled A for the primary (A) and B for the split (B) specimens.

Section 7.2 What are the requirements for hair collection materials?

(a) The specimen guides and the collection containers must not substantially affect the composition of drugs and/or drug metabolites in the hair specimen.

(b) All collection items (*e.g.,* scissors, clip) that come into contact with the hair must be single-use items or must be cleaned before each use, as described in section 8.4.

(c) The specimen guides and containers must maintain the integrity of the specimen during storage and transport so that the specimen contained therein can be tested in an HHS-certified laboratory for the

presence of drugs and/or their metabolites.

(d) The specimen guides and containers must be sufficiently transparent to enable an assessment of specimen appearance and identification of abnormal physical characteristics without opening the container.

Section 7.3 What are the minimum performance requirements for hair collection materials?

(a) The specimen guides must be capable of holding the hair specimen as positioned by the collector, and have an indication of the orientation (*i.e.,* root or distal end) of the hair specimen collected.

(b) The specimen guides or containers must have graduated markings or guides for collectors to verify the minimum width and length of hair that would equate to 100 mg of hair or 50 mg of hair in each container labeled A and B.

Subpart H—Hair Specimen Collection Procedure

Section 8.1 What privacy must the donor be given when providing a hair specimen?

The following privacy requirements apply when a donor is providing a hair specimen:

(a) Only authorized personnel and the donor may be present in the restricted access area where the collection takes place.

(b) The collector is not required to be the same gender as the donor.

Section 8.2 What must the collector ensure at the collection site before starting a hair specimen collection?

The collector must take all reasonable steps to prevent the adulteration or substitution of a hair specimen at the collection site.

Section 8.3 What are the preliminary steps in the hair specimen collection procedure?

The collector must take the following steps before beginning a hair specimen collection:

(a) If a donor fails to arrive at the collection site at the assigned time, the collector must follow the federal agency policy or contact the federal agency representative to obtain guidance on action to be taken.

(b) When the donor arrives at the collection site, the collector should begin the collection procedure without undue delay. For example, the collection should not be delayed because an authorized employer or employer representative is late in arriving.

(c) The collector requests the donor to present photo identification (*e.g.,* driver's license; employee badge issued by the employer; an alternative photo identification issued by a federal, state, or local government agency). If the donor does not have proper photo identification, the collector shall contact the supervisor of the donor or the federal agency representative who can positively identify the donor. If the donor's identity cannot be established, the collector must not proceed with the collection.

(d) The collector asks the donor to remove any unnecessary outer garments such as a coat or jacket and any hat or hood.

(e) If, at any point in the collection, the collector sees any item that appears to have been brought by the donor to the collection site with the intent to adulterate or substitute the specimen, this is considered a refusal to test. The collector must stop the collection and report the refusal to test as described in Section 8.9.

(f) If, at any point in the collection, the collector sees any evidence that the donor has lice or similar infestation in his or her hair, the collector immediately stops the collection procedure. The collector records the reason for not collecting a hair specimen on the Federal CCF, contacts the federal agency's designated representative for authorization to collect an alternate specimen, and assuming proper authorization is provided, begins the collection procedure for the alternate specimen (see Section 8.7) in accordance with the Mandatory Guidelines for Federal Workplace Drug Testing Programs using the alternate specimen. The collector sends the appropriate copies of the Federal CCF used for the hair specimen to the MRO and to the federal agency's designated representative. The federal agency may choose to provide the collection site with a standard protocol to follow in lieu of requiring the collector to contact the agency's designated representative for authorization in each case.

(g) The collector must provide identification (*e.g.,* employee badge, employee list) if requested by the donor.

(h) The collector explains the basic collection procedure to the donor.

(i) The collector informs the donor that the instructions for completing the Federal Custody and Control Form are located on the Federal CCF (*e.g.,* on the back of Copy 5 or on a separate page) or are available upon request.

(j) The collector answers any reasonable and appropriate questions the donor may have regarding the collection procedure.

Section 8.4 What steps does the collector take in the collection procedure before the donor provides a hair specimen?

(a) At the beginning of the collection, the collector must put on single-use gloves that are clean and unused. The collector must remove the gloves from the package in the presence of the donor.

(b) The collector will provide or the donor may select specimen collection materials that are clean, unused, and wrapped/sealed in original packaging. The specimen collection materials will be opened in view of the donor. Specimen collection materials must be single-use, with the exception of scissors and/or clips which may be either single-use or reusable (as described in item 2 below).

(1) Both the donor and the collector must keep the unwrapped collection materials in view at all times until the container containing the donor's hair specimen has been sealed and labeled.

(2) Scissors and/or clips may be reused provided that the collector cleans such items in the presence of the donor with an isopropyl alcohol wipe prior to use in the hair collection. If single-use items are used, the collector is not required to clean the item before use assuming such use is the first use of the item.

(c) The collector reviews with the donor the procedures required for hair specimen collection as stated in the instructions for the specimen collection kit.

(d) The collector asks the donor whether they have false hair (*i.e.,* artificial or natural hair that is not their own such as a wig, weave, or extensions). If the donor admits the presence of false hair or the collector identifies false hair after the donor denies having false hair, this does not constitute a refusal to test. If the collector can collect a sufficient amount of the donor's own hair, the collector proceeds with the collection.

(e) If the collector is unable to collect the donor's hair, the collector immediately stops the collection procedure. The collector records the reason for not collecting a hair specimen on the Federal CCF, contacts the federal agency's designated representative for authorization to collect the alternate specimen, and assuming proper authorization is provided, begins the collection procedure for the alternate specimen (see Section 8.7) in accordance with the Mandatory Guidelines for Federal Workplace Drug Testing Programs using the alternate specimen. The collector sends the

appropriate copies of the Federal CCF used for the hair specimen to the MRO and to the federal agency's designated representative. The federal agency may choose to provide the collection site with a standard protocol to follow in lieu of requiring the collector to contact the agency's designated representative for authorization in each case.

(f) The collector notes any unusual behavior or appearance of the donor on the Federal CCF. If the collector detects any conduct that clearly indicates an attempt to tamper with a specimen, the collector must report a refusal to test in accordance with Section 8.9.

Section 8.5 What steps does the collector take during and after the hair specimen collection procedure?

Integrity and Identity of the Specimen. The collector must take the following steps during and after the donor provides the hair specimen:

(a) The collector shall be present and maintain visual contact with the donor during the procedures outlined in this section.

(b) The collector cuts a portion of the donor's hair that is approximately one-half (0.5) inches wide and at least one (1.0) inch long on the crown (*i.e.,* posterior vertex) of the head and as close to the scalp as possible.

(1) The collector must ensure that at least 100 mg of hair is collected for testing.

(2) If the donor's hair is sparse or is short (*i.e.,* between one-half and one inch long), the collector may collect hair from multiple sites on the posterior vertex and back of the head, avoiding the front and side regions.

(3) If the donor's hair is less than one-half inch long or if the collector cannot collect at least 100 mg from the posterior vertex or back of the head, the collector stops the collection and takes actions described in Section 8.6.

(c) The collector subdivides the hair specimen into two approximately equal specimens (A and B), and places specimen A in the first specimen guide and specimen B in the second specimen guide. If possible, the collector aligns the hairs with the root end identified as indicated on the specimen guide. For short hair (between one-half and one inch long), the collector is not required to identify the root end. The collector secures the hair in each specimen guide (*e.g.,* folds the guide).

(d) If the donor fails to remain present through the completion of the collection, fails to follow the instructions for the collection, refuses to allow the collector to collect sufficient hair as required in step (b) above for reasons other than those described in Section 2.1, or refuses to provide an alternate specimen when directed to do so, the collector stops the collection and reports the refusal to test in accordance with Section 8.9.

(e) If the federal agency requires collection of an alternate specimen at the same time as the hair collection, the collector should collect the hair specimen first, and then collect the other authorized specimen (*e.g.,* urine or oral fluid) using the applicable collection procedures described in the Mandatory Guidelines for Federal Workplace Drug Testing Programs using the alternate specimen.

(i) The collector must record a comment on the Federal CCF for each specimen with sufficient information to link the two specimens (including the unique specimen identification number of the associated specimen).

(ii) The collector must also record a comment on the Federal CCF for the alternate specimen noting that the laboratory is to hold the specimen for testing pending the MRO's request for testing.

(iii) The collector must forward the hair specimen to an HHS-certified hair testing laboratory. The collector forwards the alternate specimen, if one is authorized to be collected at the same time as the hair specimen, to a laboratory that is certified by HHS for that specimen type. The laboratory will accession and store the alternate specimen under appropriate storage conditions in the event that the MRO requests testing as described in Section 13.5.

Section 8.6 What procedure is used when the donor is unable to provide a hair specimen?

If the donor is unable to provide a hair specimen (*i.e.,* as described in sections 2.1, 8.3, and 8.4), the collector records the reason for not collecting a hair specimen on the Federal CCF, contacts the federal agency's designated representative for authorization to collect an alternate specimen, and assuming proper authorization is provided, begins the collection procedure for the alternate specimen authorized by the federal agency (see Section 8.7) in accordance with the Mandatory Guidelines for Federal Workplace Drug Testing Programs using the alternate specimen. The collector sends the appropriate copies of the Federal CCF used for the hair specimen to the MRO and to the federal agency's designated representative. The federal agency may choose to provide the collection site with a standard protocol to follow in lieu of requiring the collector to contact the agency's designated representative for authorization to collect an alternate specimen in each case.

Section 8.7 If the donor is unable to provide a hair specimen, may another specimen type be collected for testing?

Yes. A federal agency that elects to implement hair testing is required to authorize collections of one or more alternate specimen types authorized by Mandatory Guidelines for Federal Workplace Drug Testing Programs.

Section 8.8 How does the collector prepare the hair specimens?

(a) All federal agency collections are to be split specimen collections.

(b) After placing the A and B hair specimens (*i.e.,* in the specimen guides) into separate envelopes, in the presence of the donor, the collector places a tamper-evident label/seal from the Federal CCF on each envelope. The collector records the date of the collection on the tamper-evident labels/seals.

(c) The collector instructs the donor to initial the tamper-evident labels/seals on each specimen envelope. If the donor refuses to initial the labels/seals, the collector notes the refusal on the Federal CCF and continues with the collection process.

(d) The collector must ensure that all the information required on the Federal CCF is provided.

(e) The collector asks the donor to read and sign a statement on the Federal CCF certifying that the specimens identified were collected from him or her. If the donor refuses to sign the certification statement, the collector notes the refusal on the Federal CCF and continues with the collection process.

(f) The collector signs and prints his or her name on the Federal CCF, completes the Federal CCF, and distributes the copies of the Federal CCF as required.

(g) The collector seals the specimens (A and B) in a package and, within 24 hours or during the next business day, sends them to the HHS-certified laboratory that will be testing the primary (A) hair specimen.

(h) If the specimen and Federal CCF are not immediately transported to an HHS-certified laboratory, they must remain under direct control of the collector or be appropriately secured under proper specimen storage conditions until transported.

Section 8.9 How does the collector report a donor's refusal to test?

If there is a refusal to test as defined in Section 1.7, the collector stops the collection, discards any hair specimen

collected and reports the refusal to test by:

(a) Notifying the federal agency by means (*e.g.,* telephone, email, or secure fax) that ensures that the notification is immediately received,

(b) Documenting the refusal to test including the reason on the Federal CCF. In the event that a donor is unable to provide a sufficient amount of hair for faith-based or medical reasons, or due to an insufficient amount or length of hair, the collector must specify the circumstances, and

(c) Sending all copies of the Federal CCF to the federal agency's designated representative.

Section 8.10 What are a federal agency's responsibilities for a collection site?

(a) A federal agency must ensure that collectors and collection sites satisfy all requirements in subparts D, E, F, G, and H.

(b) A federal agency (or only one federal agency when several agencies are using the same collection site) must inspect 5 percent or up to a maximum of 50 collection sites each year, selected randomly from those sites used to collect agency specimens (*e.g.,* virtual, onsite, or self-evaluation).

(c) A federal agency must investigate reported collection site deficiencies (*e.g.,* specimens reported ''rejected for testing'' by an HHS-certified laboratory) and take appropriate action which may include a collection site self-assessment (*i.e.,* using the Collection Site Checklist for the Collection of Hair Specimens for Federal Agency Workplace Drug Testing Programs) or an inspection of the collection site. The inspections of these additional collection sites may be included in the 5 percent or maximum of 50 collection sites inspected annually.

Subpart I—HHS Certification of Laboratories

Section 9.1 Who has the authority to certify laboratories to test hair specimens for federal agencies?

(a) The Secretary has broad discretion to take appropriate action to ensure the full reliability and accuracy of drug testing and reporting, to resolve problems related to drug testing, and to enforce all standards set forth in these Guidelines. The Secretary has the authority to issue directives to any HHS-certified laboratory, including suspending the use of certain analytical procedures when necessary to protect the integrity of the testing process; ordering any HHS-certified laboratory to undertake corrective actions to respond to material deficiencies identified by an inspection or through performance testing; ordering any HHS-certified laboratory to send specimens or specimen aliquots to another HHS-certified laboratory for retesting when necessary to ensure the accuracy of testing under these Guidelines; ordering the review of results for specimens tested under the Guidelines for private sector clients to the extent necessary to ensure the full reliability of drug testing for federal agencies; and ordering any other action necessary to address deficiencies in drug testing, analysis, specimen collection, chain of custody, reporting of results, or any other aspect of the certification program.

(b) A laboratory is prohibited from stating or implying that it is certified by HHS under these Guidelines to test hair specimens for federal agencies unless it holds such certification.

Section 9.2 What is the process for a laboratory to become HHS-certified?

(a) A laboratory seeking HHS certification must:

(1) Submit a completed OMB-approved application form (*i.e.,* the applicant laboratory provides detailed information on both the administrative and analytical procedures to be used for federally regulated specimens);

(2) Have its application reviewed as complete and accepted by HHS;

(3) Successfully complete the PT challenges in 3 consecutive sets of initial PT samples;

(4) Satisfy all the requirements for an initial inspection; and

(5) Receive notification of certification from the Secretary before testing specimens for federal agencies.

Section 9.3 What is the process for a laboratory to maintain HHS certification?

(a) To maintain HHS certification, a laboratory must:

(1) Successfully participate in both the maintenance PT and inspection programs (*i.e.,* successfully test the required quarterly sets of maintenance PT samples, undergo an inspection 3 months after being certified, and undergo maintenance inspections at a minimum of every 6 months thereafter);

(2) Respond in an appropriate, timely, and complete manner to required corrective action requests if deficiencies are identified in the maintenance PT performance, during the inspections, operations, or reporting; and

(3) Satisfactorily complete corrective remedial actions, and undergo special inspection and special PT sets to maintain or restore certification when material deficiencies occur in either the PT program, inspection program, or in operations and reporting.

Section 9.4 What is the process when a laboratory does not maintain its HHS certification?

(a) A laboratory that does not maintain its HHS certification must:

(1) Stop testing federally regulated specimens;

(2) Ensure the security of federally regulated specimens and records throughout the required storage period described in Sections 11.20, 11.21, and 14.7;

(3) Ensure access to federally regulated specimens and records in accordance with Sections 11.23 and 11.24 and Subpart P; and

(4) Follow the HHS suspension and revocation procedures when imposed by the Secretary, follow the HHS procedures in Subpart P that will be used for all actions associated with the suspension and/or revocation of HHS certification.

Section 9.5 What are the qualitative and quantitative specifications of performance testing (PT) samples?

(a) PT samples used to evaluate drug tests will be prepared using the following specifications:

(1) PT samples may contain one or more of the drugs and drug metabolites in the drug classes listed in Section 3.4. The PT samples must satisfy one of the following parameters:

(i) The concentration of a drug or metabolite will be at least 20 percent above the initial test cutoff concentration for the drug or drug metabolite;

(ii) The concentration of a drug or metabolite may be as low as 40 percent of the confirmatory test cutoff concentration when the PT sample is designated as a retest sample; or

(iii) The concentration of drug or metabolite may differ from 9.5(a)(1)(i) and 9.5(a)(1)(ii) for a special purpose.

(2) A PT sample may contain an interfering substance or other substances for special purposes.

(3) A PT sample may be prepared in various ways (*e.g.,* using drug user hair, hair externally contaminated with drug analytes, hair subjected to cosmetic treatments) to challenge the laboratory's decontamination and test procedures.

(4) A negative PT sample will not contain a measurable amount of a target analyte.

(b) The laboratory must (to the greatest extent possible) handle, test, and report a PT sample in a manner identical to that used for a donor specimen, unless otherwise specified.

Section 9.6 What are the PT requirements for an applicant laboratory that seeks to perform hair testing?

(a) An applicant laboratory that seeks certification under these Guidelines to perform hair testing must satisfy the following criteria on three consecutive sets of PT samples:

(1) Have no false positive results;

(2) Correctly identify, confirm, and report at least 90 percent of the total drug challenges over the three sets of PT samples;

(3) Correctly identify at least 80 percent of the drug challenges for each initial drug test over the three sets of PT samples;

(4) For the confirmatory drug tests, correctly determine the concentrations [*i.e.,* no more than ±20 percent or ±2 standard deviations (whichever is larger) from the appropriate reference or peer group means] for at least 80 percent of the total drug challenges over the three sets of PT samples;

(5) For the confirmatory drug tests, must not obtain any drug concentration that differs by more than ±50 percent from the appropriate reference or peer group mean;

(6) For each confirmatory drug test, correctly identify and determine the concentrations [*i.e.,* no more than ±20 percent or ±2 standard deviations (whichever is larger) from the appropriate reference or peer group means] for at least 50 percent of the drug challenges for an individual drug over the three sets of PT samples;

(7) For each confirmatory drug test, correctly identify a sample that has been contaminated with one or more drugs;

(b) Failure to satisfy these requirements will result in the denial of the laboratory's application for HHS certification to perform hair testing.

Section 9.7 What are the PT requirements for an HHS-certified hair laboratory?

(a) A laboratory certified under these Guidelines to perform hair testing must satisfy the following criteria on the maintenance PT samples:

(1) Have no false positive results;

(2) Correctly identify, confirm, and report at least 90 percent of the total drug challenges over two consecutive PT cycles;

(3) Correctly identify at least 80 percent of the drug challenges for each initial drug test over two consecutive PT cycles;

(4) For the confirmatory drug tests, correctly determine that the concentrations for at least 80 percent of the total drug challenges are no more than ±20 percent or ±2 standard deviations (whichever is larger) from the appropriate reference or peer group means over two consecutive PT cycles;

(5) For the confirmatory drug tests, must not obtain any drug concentration that differs by more than ±50 percent from the appropriate reference or peer group means;

(6) For each confirmatory drug test, correctly identify and determine that the concentrations for at least 50 percent of the drug challenges for an individual drug are no more than ±20 percent or ±2 standard deviations (whichever is larger) from the appropriate reference or peer group means over two consecutive PT cycles;

(7) For each confirmatory drug test, correctly identify a sample contaminated with one or more drugs;

(b) Failure to participate in all PT cycles or to satisfy these requirements may result in suspension or revocation of an HHS-certified laboratory's certification.

Section 9.8 What are the inspection requirements for an applicant laboratory?

(a) An applicant laboratory is inspected by a team of two inspectors.

(b) Each inspector conducts an independent review and evaluation of all aspects of the laboratory's testing procedures and facilities using an inspection checklist.

Section 9.9 What are the maintenance inspection requirements for an HHS-certified laboratory?

(a) An HHS-certified laboratory must undergo an inspection 3 months after becoming certified and at least every 6 months thereafter.

(b) An HHS-certified laboratory is inspected by two or more inspectors. The number of inspectors is determined according to the number of specimens to be reviewed. Additional information regarding inspections is available from SAMHSA.

(c) Inspectors conduct an independent evaluation and review of the HHS-certified laboratory's procedures, records, and facilities using guidance provided by the Secretary.

(d) To remain certified, an HHS-certified laboratory must continue to satisfy the minimum requirements as stated in these Guidelines.

Section 9.10 Who can inspect an HHS-certified laboratory and when may the inspection be conducted?

(a) An individual may be selected as an inspector for the Secretary if they satisfy the following criteria:

(1) Has experience and an educational background similar to that required for either a responsible person or a certifying scientist for an HHS-certified laboratory as described in Subpart K;

(2) Has read and thoroughly understands the policies and requirements contained in these Guidelines and in other guidance consistent with these Guidelines provided by the Secretary;

(3) Submits a resume and documentation of qualifications to HHS;

(4) Attends approved training; and

(5) Performs acceptably as an inspector on an inspection of an HHS-certified laboratory.

(b) The Secretary or a federal agency may conduct an inspection at any time.

Section 9.11 What happens if an applicant laboratory does not satisfy the minimum requirements for either the PT program or the inspection program?

If an applicant laboratory fails to satisfy the requirements established for the initial certification process, the laboratory must start the certification process from the beginning.

Section 9.12 What happens if an HHS-certified laboratory does not satisfy the minimum requirements for either the PT program or the inspection program?

(a) If an HHS-certified laboratory fails to satisfy the minimum requirements for certification, the laboratory is given a period of time (*e.g.,* 5 or 30 working days depending on the nature of the deficiency) to provide any explanation for its performance and evidence that all deficiencies have been corrected.

(b) A laboratory's HHS certification may be revoked, suspended, or no further action taken depending on the seriousness of the deficiencies and whether there is evidence that the deficiencies have been corrected and that current performance meets the requirements for certification.

(c) An HHS-certified laboratory may be required to undergo a special inspection or to test additional PT samples to address deficiencies.

(d) If an HHS-certified laboratory's certification is revoked or suspended in accordance with the process described in Subpart P, the laboratory is not permitted to test federally regulated specimens until the suspension is lifted or the laboratory has successfully completed the certification requirements as a new applicant laboratory.

Section 9.13 What factors are considered in determining whether revocation of a laboratory's HHS certification is necessary?

(a) The Secretary shall revoke certification of an HHS-certified

laboratory in accordance with these Guidelines if the Secretary determines that revocation is necessary to ensure fully reliable and accurate drug test results and reports.

(b) The Secretary shall consider the following factors in determining whether revocation is necessary:

(1) Unsatisfactory performance in analyzing and reporting the results of drug tests (*e.g.,* an HHS-certified laboratory reporting a false positive result for an employee's drug test);

(2) Unsatisfactory participation in performance testing or inspections;

(3) A material violation of a certification standard, contract term, or other condition imposed on the HHS-certified laboratory by a federal agency using the laboratory's services;

(4) Conviction for any criminal offense committed as an incident to operation of the HHS-certified laboratory; or

(5) Any other cause that materially affects the ability of the HHS-certified laboratory to ensure fully reliable and accurate drug test results and reports.

(c) The period and terms of revocation shall be determined by the Secretary and shall depend upon the facts and circumstances of the revocation and the need to ensure accurate and reliable drug testing.

Section 9.14 What factors are considered in determining whether to suspend a laboratory's HHS certification?

(a) The Secretary may immediately suspend (either partially or fully) a laboratory's HHS certification to conduct drug testing for federal agencies if the Secretary has reason to believe that revocation may be required and that immediate action is necessary to protect the interests of the United States and its employees.

(b) The Secretary shall determine the period and terms of suspension based upon the facts and circumstances of the suspension and the need to ensure accurate and reliable drug testing.

Section 9.15 How does the Secretary notify an HHS-certified laboratory that action is being taken against the laboratory?

(a) When a laboratory's HHS certification is suspended or the Secretary seeks to revoke HHS certification, the Secretary shall immediately serve the HHS-certified laboratory with written notice of the suspension or proposed revocation by fax, mail, personal service, or registered or certified mail, return receipt requested. This notice shall state the following:

(1) The reasons for the suspension or proposed revocation;

(2) The terms of the suspension or proposed revocation; and

(3) The period of suspension or proposed revocation.

(b) The written notice shall state that the laboratory will be afforded an opportunity for an informal review of the suspension or proposed revocation if it so requests in writing within 30 days of the date the laboratory received the notice, or if expedited review is requested, within 3 days of the date the laboratory received the notice. Subpart P contains detailed procedures to be followed for an informal review of the suspension or proposed revocation.

(c) A suspension must be effective immediately. A proposed revocation must be effective 30 days after written notice is given or, if review is requested, upon the reviewing official's decision to uphold the proposed revocation. If the reviewing official decides not to uphold the suspension or proposed revocation, the suspension must terminate immediately and any proposed revocation shall not take effect.

(d) The Secretary will publish in the **Federal Register** the name, address, and telephone number of any HHS-certified laboratory that has its certification revoked or suspended under Section 9.13 or Section 9.14, respectively, and the name of any HHS-certified laboratory that has its suspension lifted. The Secretary shall provide to any member of the public upon request the written notice provided to a laboratory that has its HHS certification suspended or revoked, as well as the reviewing official's written decision which upholds or denies the suspension or proposed revocation under the procedures of Subpart P.

Section 9.16 May a laboratory that had its HHS certification revoked be recertified to test federal agency specimens?

Following revocation, a laboratory may apply for recertification. Unless otherwise provided by the Secretary in the notice of revocation under Section 9.15 or the reviewing official's decision under Section 16.9(e) or 16.14(a), a laboratory which has had its certification revoked may reapply for HHS certification as an applicant laboratory.

Section 9.17 Where is the list of HHS-certified laboratories published?

(a) The list of HHS-certified laboratories is published monthly in the **Federal Register**. This notice is also available on the internet at *http://www.samhsa.gov/workplace.*

(b) An applicant laboratory is not included on the list.

Subpart J—Blind Samples Submitted by an Agency

Section 10.1 What are the requirements for federal agencies to submit blind samples to HHS-certified laboratories?

(a) Each federal agency is required to submit blind samples for its workplace drug testing program. The collector must send the blind samples to the HHS-certified laboratory that the collector sends employee specimens.

(b) Each federal agency must submit at least 3 percent blind samples along with its donor specimens based on the projected total number of donor specimens collected per year (up to a maximum of 400 blind samples). Every effort should be made to ensure that blind samples are submitted quarterly.

(c) Approximately 75 percent of the blind samples submitted each year by an agency must be negative and 25 percent must be positive for one or more drugs.

Section 10.2 What are the requirements for blind samples?

(a) Drug positive blind samples must be validated by the supplier using appropriate initial and confirmatory tests.

(1) Drug positive blind samples must contain one or more of the drugs or metabolites listed in Section 3.4.

(2) Drug positive blind samples must contain concentrations of drugs at least 1.5 times the initial drug test cutoff concentration.

(b) Drug negative blind samples (*i.e.,* certified to contain no drugs) must be validated by the supplier as negative using appropriate initial and confirmatory tests.

(c) The supplier must provide information on the blind samples' content, validation, expected results, and stability to the collection site/collector sending the blind samples to the laboratory, and must provide the information upon request to the MRO, the federal agency for which the blind sample was submitted, or the Secretary.

Section 10.3 How is a blind sample submitted to an HHS-certified laboratory?

(a) A blind sample must be submitted as a split specimen (specimens A and B) with the current Federal CCF that the HHS-certified laboratory uses for donor specimens. The collector provides the required information to ensure that the Federal CCF has been properly completed and provides fictitious

initials on the specimen label/seal. The collector must indicate that the specimen is a blind sample on the MRO copy where a donor would normally provide a signature.

(b) A collector should attempt to distribute the required number of blind samples randomly with donor specimens rather than submitting the full complement of blind samples as a single group.

Section 10.4 What happens if an inconsistent result is reported for a blind sample?

If an HHS-certified laboratory reports a result for a blind sample that is inconsistent with the expected result (*e.g.,* a laboratory reports a negative result for a blind sample that was supposed to be positive, a laboratory reports a positive result for a blind sample that was supposed to be negative):

(a) The MRO must contact the laboratory and attempt to determine if the laboratory made an error during the testing or reporting of the sample;

(b) The MRO must contact the blind sample supplier and attempt to determine if the supplier made an error during the preparation or transfer of the sample;

(c) The MRO must contact the collector and determine if the collector made an error when preparing the blind sample for transfer to the HHS-certified laboratory;

(d) If there is no obvious reason for the inconsistent result, the MRO must notify both the federal agency for which the blind sample was submitted and the Secretary; and

(e) The Secretary shall investigate the blind sample error. A report of the Secretary's investigative findings and the corrective action taken in response to identified deficiencies must be sent to the federal agency. The Secretary shall ensure notification of the finding as appropriate to other federal agencies and coordinate any necessary actions to prevent the recurrence of the error.

Subpart K—Laboratory

Section 11.1 What must be included in the HHS-certified laboratory's standard operating procedure manual?

(a) An HHS-certified laboratory must have a standard operating procedure (SOP) manual that describes, in detail, all HHS-certified laboratory operations. When followed, the SOP manual ensures that all specimens are tested using the same procedures.

(b) The SOP manual must include at a minimum, but is not limited to, a detailed description of the following:

(1) Chain of custody procedures;

(2) Accessioning;

(3) Security;

(4) Quality control/quality assurance programs;

(5) Analytical methods and procedures;

(6) Equipment and maintenance programs;

(7) Personnel training;

(8) Reporting procedures; and

(9) Computers, software, and laboratory information management systems.

(c) All procedures in the SOP manual must be compliant with these Guidelines and all guidance provided by the Secretary.

(d) A copy of all procedures that have been replaced or revised and the dates on which the procedures were in effect must be maintained for at least 2 years.

Section 11.2 What are the responsibilities of the responsible person (RP)?

(a) Manage the day-to-day operations of the HHS-certified laboratory even if another individual has overall responsibility for alternate areas of a multi-specialty laboratory.

(b) Ensure that there are sufficient personnel with adequate training and experience to supervise and conduct the work of the HHS-certified laboratory. The RP must ensure the continued competency of laboratory staff by documenting their in-service training, reviewing their work performance, and verifying their skills.

(c) Maintain a complete and current SOP manual that is available to all personnel of the HHS-certified laboratory and ensure that it is followed. The SOP manual must be reviewed, signed, and dated by the RP(s) when procedures are first placed into use and when changed or when a new individual assumes responsibility for the management of the HHS-certified laboratory. The SOP must be reviewed and documented by the RP annually.

(d) Maintain a quality assurance program that ensures the proper performance and reporting of all test results; verify and monitor acceptable analytical performance for all controls and calibrators; monitor quality control testing; and document the validity, reliability, accuracy, precision, and performance characteristics of each test and test system.

(e) Initiate and implement all remedial actions necessary to maintain satisfactory operation and performance of the HHS-certified laboratory in response to the following: Quality control systems not within performance specifications; errors in result reporting or in analysis of performance testing samples; and inspection deficiencies. The RP must ensure that specimen results are not reported until all corrective actions have been taken and that the results provided are accurate and reliable.

Section 11.3 What scientific qualifications must the RP have?

The RP must have documented scientific qualifications in analytical toxicology.

Minimum qualifications are:

(a) Certification or licensure as a laboratory director by the state in forensic or clinical laboratory toxicology, a Ph.D. in one of the natural sciences, or training and experience comparable to a Ph.D. in one of the natural sciences with training and laboratory/research experience in biology, chemistry, and pharmacology or toxicology;

(b) Experience in forensic toxicology with emphasis on the collection and analysis of biological specimens for drugs of abuse;

(c) Experience in forensic applications of analytical toxicology (*e.g.,* publications, court testimony, conducting research on the pharmacology and toxicology of drugs of abuse) or qualify as an expert witness in forensic toxicology;

(d) Fulfillment of the RP responsibilities and qualifications, as demonstrated by the HHS-certified laboratory's performance and verified upon interview by HHS-trained inspectors during each on-site inspection; and

(e) Qualify as a certifying scientist.

Section 11.4 What happens when the RP is absent or leaves an HHS-certified laboratory?

(a) HHS-certified laboratories must have multiple RPs or one RP and an alternate RP. If the RP(s) are concurrently absent, an alternate RP must be present and qualified to fulfill the responsibilities of the RP.

(1) If an HHS-certified laboratory is without the RP and alternate RP for 14 calendar days or less (*e.g.,* temporary absence due to vacation, illness, or business trip), the HHS-certified laboratory may continue operations and testing of federal agency specimens under the direction of a certifying scientist.

(2) The Secretary, in accordance with these Guidelines, will suspend a laboratory's HHS certification for all specimens if the laboratory does not have an RP or alternate RP for a period of more than 14 calendar days. The suspension will be lifted upon the

Secretary's approval of a new permanent RP or alternate RP.

(b) If the RP leaves an HHS-certified laboratory:

(1) The HHS-certified laboratory may maintain certification and continue testing federally regulated specimens under the direction of an alternate RP for a period of up to 180 days while seeking to hire and receive the Secretary's approval of the RP's replacement.

(2) The Secretary, in accordance with these Guidelines, will suspend a laboratory's HHS certification for all federally regulated specimens if the laboratory does not have a permanent RP within 180 days. The suspension will be lifted upon the Secretary's approval of the new permanent RP.

(c) To nominate an individual as an RP or alternate RP, the HHS-certified laboratory must submit the following documents to the Secretary: The candidate's current resume or curriculum vitae, copies of diplomas and licensures, a training plan (not to exceed 90 days) to transition the candidate into the position, an itemized comparison of the candidate's qualifications to the minimum RP qualifications described in the Guidelines, and have official academic transcript(s) submitted from the candidate's institution(s) of higher learning. The candidate must be found qualified during an on-site inspection of the HHS-certified laboratory.

(d) The HHS-certified laboratory must fulfill additional inspection and PT criteria as required prior to conducting federally regulated testing under a new RP.

Section 11.5 What qualifications must an individual have to certify a result reported by an HHS-certified laboratory?

(a) A certifying scientist must have:

(1) At least a bachelor's degree in the chemical or biological sciences or medical technology, or equivalent;

(2) Training and experience in the analytical methods and forensic procedures used by the HHS-certified laboratory relevant to the results that the individual certifies; and

(3) Training and experience in reviewing and reporting forensic test results and maintaining chain of custody, and an understanding of appropriate remedial actions in response to problems that may arise.

(b) A certifying technician must have:

(1) Training and experience in the analytical methods and forensic procedures used by the HHS-certified laboratory relevant to the results that the individual certifies; and

(2) Training and experience in reviewing and reporting forensic test results and maintaining chain of custody, and an understanding of appropriate remedial actions in response to problems that may arise.

Section 11.6 What qualifications and training must other personnel of an HHS-certified laboratory have?

(a) All HHS-certified laboratory staff (*e.g.,* technicians, administrative staff) must have the appropriate training and skills for the tasks they perform.

(b) Each individual working in an HHS-certified laboratory must be properly trained (*i.e.,* receive training in each area of work that the individual will be performing, including training in forensic procedures related to their job duties) before they are permitted to work independently with federally regulated specimens. All training must be documented.

Section 11.7 What security measures must an HHS-certified laboratory maintain?

(a) An HHS-certified laboratory must control access to the drug testing facility, specimens, aliquots, and records.

(b) Authorized visitors must be escorted at all times, except for individuals conducting inspections (*i.e.,* for the Department, a federal agency, a state, or other accrediting agency) or emergency personnel (*e.g.,* firefighters and medical rescue teams).

(c) An HHS-certified laboratory must maintain records documenting the identity of the visitor and escort, date, time of entry and exit, and purpose for access to the secured area.

Section 11.8 What are the laboratory chain of custody requirements for specimens and aliquots?

(a) HHS-certified laboratories must use chain of custody procedures (internal and external) to maintain control and accountability of specimens from the time of receipt at the laboratory through completion of testing, reporting of results, during storage, and continuing until final disposition of the specimens.

(b) HHS-certified laboratories must use chain of custody procedures to document the handling and transfer of aliquots throughout the testing process until final disposal.

(c) The chain of custody must be documented using either paper copy or electronic procedures.

(d) Each individual who handles a specimen or aliquot must sign and complete the appropriate entries on the chain of custody form when the specimen or aliquot is handled or transferred, and every individual in the chain must be identified.

(e) The date and purpose must be recorded on an appropriate chain of custody form each time a specimen or aliquot is handled or transferred.

Section 11.9 How must an HHS-certified laboratory process an alternate specimen that was collected at the same time as a hair specimen?

When an alternate specimen is collected at the same time as a hair specimen, the collector must forward the hair specimen to an HHS-certified hair testing laboratory and forward the alternate specimen to a laboratory that is certified by HHS for that specimen type. Section 8.5(e) requires the collector to record a comment on each Federal CCF with sufficient information (including the associated specimen's unique specimen identification number) to enable the laboratory to identify that there is an associated hair specimen.

(a) When a laboratory receives a specimen that it is not certified by HHS to test, the laboratory must contact the federal agency representative to select a laboratory with the appropriate HHS certification to test the specimen, and must forward the specimen to the selected laboratory.

(b) The laboratory certified to test the alternate specimen must accession and hold the specimen under the storage conditions specified by the Mandatory Guidelines for Federal Workplace Drug Testing Programs for that specimen type. The laboratory does not test the alternate specimen unless an MRO submits a signed request for testing.

(c) Upon receipt of a written MRO request for testing of the alternate specimen, the laboratory tests and reports the specimen in accordance with its standard operating procedures for that specimen type.

Section 11.10 What amount of hair is tested?

The laboratory prepares an aliquot of the hair specimen of the specified weight needed for the test. If the root end is identified, the laboratory uses the first one inch of the hair from the root end.

Section 11.11 What are the requirements for an initial drug test?

(a) An initial drug test may be:

(1) An immunoassay or

(2) An alternate technology (*e.g.,* spectrometry, spectroscopy).

(b) An HHS-certified laboratory must validate an initial drug test before testing specimens.

(c) Initial drug tests must be accurate and reliable for the testing of specimens when identifying drugs or their metabolites.

(d) An HHS-certified laboratory may conduct a second initial drug test using a method with different specificity, to rule out cross-reacting compounds. This second initial drug test must satisfy the batch quality control requirements specified in Section 11.12.

Section 11.12 What must an HHS-certified laboratory do to validate an initial drug test?

(a) An HHS-certified laboratory must demonstrate and document the following for each initial drug test:

(1) The ability to differentiate negative specimens from those requiring further testing;

(2) The performance of the test around the cutoff concentration, using samples at several concentrations between 0 and 150 percent of the cutoff concentration;

(3) The effective concentration range of the test (linearity);

(4) The potential for carryover;

(5) The potential for interfering substances; and

(6) The potential matrix effects if using an alternate technology.

(b) Each new lot of reagent must be verified prior to being placed into service.

(c) Each initial drug test using an alternate technology must be re-verified periodically or at least annually.

Section 11.13 What are the batch quality control requirements when conducting an initial drug test?

(a) Each batch of specimens must contain the following controls:

(1) At least one control certified to contain no drug or drug metabolite;

(2) At least one positive control with the drug or drug metabolite targeted at a concentration 25 percent above the cutoff;

(3) At least one control with the drug or drug metabolite targeted at a concentration 75 percent of the cutoff; and

(4) At least one control that appears as a donor specimen to the analysts.

(b) Calibrators and controls must total at least 10 percent of the aliquots analyzed in each batch.

Section 11.14 What are the requirements for a confirmatory drug test?

(a) The analytical method must use mass spectrometric identification [*e.g.,* gas chromatography/mass spectrometry (GC/MS), liquid chromatography/mass spectrometry (LC/MS), GC/MS/MS, LC/MS/MS] or equivalent.

(b) A confirmatory drug test must be validated before it can be used to test federally regulated specimens.

(c) Confirmatory drug tests must be accurate and reliable for the testing of a hair specimen when identifying and quantifying drugs or their metabolites.

(d) The laboratory must subject each confirmatory drug test specimen to a validated and effective decontamination procedure prior to testing.

Section 11.15 What must an HHS-certified laboratory do to validate a confirmatory drug test?

(a) An HHS-certified laboratory must demonstrate and document the following for each confirmatory drug test:

(1) The linear range of the analysis;

(2) The limit of detection;

(3) The limit of quantification;

(4) The accuracy and precision at the cutoff concentration;

(5) The accuracy (bias) and precision at 40 percent of the cutoff concentration;

(6) The potential for interfering substances;

(7) The potential for carryover;

(8) The effectiveness of the decontamination procedure; and

(9) The potential matrix effects if using liquid chromatography coupled with mass spectrometry.

(b) Each new lot of reagent must be verified prior to being placed into service.

(c) HHS-certified laboratories must re-verify each confirmatory drug test method periodically or at least annually.

Section 11.16 What are the batch quality control requirements when conducting a confirmatory drug test?

(a) At a minimum, each batch of specimens must contain the following calibrators and controls:

(1) A calibrator at the cutoff concentration;

(2) At least one control certified to contain no drug or drug metabolite;

(3) At least one positive control with the drug or drug metabolite targeted at 25 percent above the cutoff;

(4) At least one control targeted at or less than 40 percent of the cutoff; and

(5) At least one control contaminated with drug analyte to monitor the effectiveness of the decontamination procedure.

(b) Calibrators and controls must total at least 10 percent of the aliquots analyzed in each batch.

Section 11.17 What are the analytical and quality control requirements for conducting specimen validity tests?

An HHS-certified laboratory must perform specimen validity testing to identify hair that has been damaged to the extent that the drug test may be affected, and may perform other specimen validity tests in accordance with Sections 3.1 and 3.5.

(a) Each invalid, adulterated, or substituted specimen validity result must be based on an initial specimen validity test on one aliquot and a confirmatory specimen validity test on a second aliquot;

(b) The HHS-certified laboratory must establish acceptance criteria and analyze calibrators and controls as appropriate to verify and document the validity of the test results; and

(c) Controls must be analyzed concurrently with specimens.

Section 11.18 What must an HHS-certified laboratory do to validate a specimen validity test?

An HHS-certified laboratory must demonstrate and document for each specimen validity test the appropriate performance characteristics of the test, and must re-verify the test periodically, or at least annually. Each new lot of reagent must be verified prior to being placed into service.

Section 11.19 What are the requirements for an HHS-certified laboratory to report a test result?

(a) Laboratories must report a test result to the agency's MRO within an average of 5 working days after receipt of the specimen. Reports must use the Federal CCF and/or an electronic report, as described in items (l) and (m) below. Before any test result can be reported, it must be certified by a certifying scientist or a certifying technician (as appropriate).

(b) A primary (A) specimen is reported negative when each initial drug test is negative or if the specimen is negative upon confirmatory drug testing, and the specimen does not meet invalid criteria as described in items (e)(1) through (e)(5) below.

(c) A primary (A) specimen is reported positive for a specific drug or drug metabolite when both the initial drug test is positive and the confirmatory drug test is positive in accordance with Section 3.4.

(d) For a specimen that has an invalid result for one of the reasons stated in items (e)(1) or (e)(2) below, the HHS-certified laboratory shall contact the MRO and both will decide if testing by another HHS-certified laboratory would be useful in being able to report a positive, adulterated, or substituted result. If no further testing is necessary, the HHS-certified laboratory then reports the invalid result to the MRO.

(e) A primary (A) hair specimen is reported as an invalid result when:

(1) The color of the A and B specimens are clearly different (note: A is tested);

(2) Interference occurs on the initial drug tests on two separate aliquots (*i.e.,* valid initial drug test results cannot be obtained);

(3) Interference with the confirmatory drug test occurs on at least two separate aliquots of the specimen and the HHS-certified laboratory is unable to identify the interfering substance;

(4) The hair is damaged to the extent that the drug test result may be affected (*i.e.,* based on at least two separate aliquots of the specimen tested using a validated method to assess damage); or

(5) The laboratory obtains a positive confirmatory drug test result and is unable to definitively remove external contamination from the specimen using a validated decontamination procedure.

(f) An HHS-certified laboratory shall reject a primary (A) specimen for testing when a fatal flaw occurs as described in Section 15.1 or when a correctable flaw as described in Section 15.2 is not recovered. The HHS-certified laboratory will indicate on the Federal CCF that the specimen was rejected for testing and provide the reason for reporting the rejected for testing result.

(g) An HHS-certified laboratory must report all positive, adulterated, substituted, and invalid test results for a hair specimen, with the exceptions noted below. For example, a specimen can be positive for a drug and invalid because of interference on the confirmatory test for a different drug analyte. The following exceptions apply:

(1) When a specimen is positive and invalid because the hair is damaged as described in item (e)(4) above, the laboratory does not report the positive result.

(2) When a specimen is invalid because the laboratory cannot definitively remove a drug present from external contamination as described in item (e)(5) above, the laboratory does not report the positive result for that drug. If the specimen is also positive for another drug and the laboratory was able to remove external contamination for that drug, the laboratory reports that positive result in addition to the invalid result.

(h) An HHS-certified laboratory must report the confirmatory concentration of each drug or drug metabolite reported for a positive result.

(i) An HHS-certified laboratory must report numerical values of the specimen validity test results that support an adulterated, substituted, or invalid result (as appropriate).

(j) When the concentration of a drug or drug metabolite exceeds the validated linear range of the confirmatory test, HHS-certified laboratories may report to the MRO that the quantitative value exceeds the linear range of the test or that the quantitative value is greater than ''*insert the actual value for the upper limit of the linear range,*'' or laboratories may report a quantitative value above the upper limit of the linear range that was obtained by diluting an aliquot of the specimen to achieve a result within the method's linear range and multiplying the result by the appropriate dilution factor.

(k) HHS-certified laboratories may transmit test results to the MRO by various electronic means (*e.g.,* teleprinter, fax, or computer). Transmissions of the reports must ensure confidentiality and the results may not be reported verbally by telephone. Laboratories and external service providers must ensure the confidentiality, integrity, and availability of the data and limit access to any data transmission, storage, and retrieval system.

(l) HHS-certified laboratories must fax, courier, mail, or electronically transmit a legible image or copy of the completed Federal CCF and/or forward a computer-generated electronic report. The computer-generated report must contain sufficient information to ensure that the test results can accurately represent the content of the custody and control form that the MRO received from the collector. HHS-certified laboratories must use the drug/metabolite names in Section 3.4 and/or the drug/metabolite abbreviations on the Federal CCF on computer-generated electronic reports.

(m) For positive, adulterated, substituted, invalid, and rejected specimens, laboratories must fax, courier, mail, or electronically transmit a legible image or copy of the completed Federal CCF.

Section 11.20 How long must an HHS-certified laboratory retain specimens?

(a) An HHS-certified laboratory must retain specimens that were reported as positive, adulterated, or as an invalid result for a minimum of 1 year.

(b) Retained hair specimens must be kept in secured storage at room temperature and out of direct light, to ensure their availability for retesting during an administrative or judicial proceeding.

(c) Alternate specimens (*i.e.,* urine or oral fluid) must be kept in appropriate long-term storage conditions, as specified by the Mandatory Guidelines for Federal Workplace Drug Testing Programs for that specimen type.

(d) The laboratory must retain the alternate specimen for the same period of time that the associated hair specimen is retained.

(e) Federal agencies may request that the HHS-certified laboratory retain a specimen for an additional specified period of time and must make that request within the 1-year period following the laboratory's receipt of the specimen.

Section 11.21 How long must an HHS-certified laboratory retain records?

(a) An HHS-certified laboratory must retain all records generated to support test results for at least 2 years. The laboratory may convert hardcopy records to electronic records for storage and then discard the hardcopy records after 6 months.

(b) A federal agency may request the HHS-certified laboratory to maintain a documentation package (as described in Section 11.23) that supports the chain of custody, testing, and reporting of a donor's specimen that is under legal challenge by a donor. The federal agency's request to the laboratory must be in writing and must specify the period of time to maintain the documentation package.

(c) An HHS-certified laboratory may retain records other than those included in the documentation package beyond the normal 2-year period of time.

Section 11.22 What statistical summary reports must an HHS-certified laboratory provide for hair testing?

(a) HHS-certified laboratories must provide to each federal agency for which they perform testing a semiannual statistical summary report that must be submitted by mail, fax, or email within 14 working days after the end of the semiannual period. The summary report must not include any personally identifiable information. A copy of the semiannual statistical summary report will also be sent to the Secretary or designated HHS representative. The semiannual statistical report contains the following information:

(1) Reporting period (inclusive dates);

(2) HHS-certified laboratory name and address;

(3) Federal agency name;

(4) Number of specimen results reported;

(5) Number of specimens collected by reason for test;

(6) Number of specimens reported negative;

(7) Number of specimens rejected for testing because of a fatal flaw;

(8) Number of specimens rejected for testing because of an uncorrected flaw;

(9) Number of specimens tested positive by each initial drug test;

(10) Number of specimens reported positive;

(11) Number of specimens reported positive for each drug and drug metabolite;

(12) Number of specimens reported adulterated;

(13) Number of specimens reported substituted; and

(14) Number of specimens reported as invalid result.

(b) An HHS-certified laboratory must make copies of an agency's test results available when requested to do so by the Secretary or by the federal agency for which the laboratory is performing drug-testing services.

(c) An HHS-certified laboratory must ensure that a qualified individual is available to testify in a proceeding against a federal employee when the proceeding is based on a test result reported by the laboratory.

Section 11.23 What HHS-certified laboratory information is available to a federal agency?

(a) Following a federal agency's receipt of a positive, adulterated, or substituted drug test report, the federal agency may submit a written request for copies of the records relating to the drug test results or a documentation package or any relevant certification, review, or revocation of certification records.

(b) Standard documentation packages provided by an HHS-certified laboratory must contain the following items:

(1) A cover sheet providing a brief description of the procedures and tests performed on the donor's specimen;

(2) A table of contents that lists all documents and materials in the package by page number;

(3) A copy of the Federal CCF with any attachments, internal chain of custody records for the specimen, memoranda (if any) generated by the HHS-certified laboratory, and a copy of the electronic report (if any) generated by the HHS-certified laboratory;

(4) A brief description of the HHS-certified laboratory's initial drug (and specimen validity, if applicable) testing procedures, instrumentation, and batch quality control requirements;

(5) Copies of the initial test data for the donor's specimen with all calibrators and controls and copies of all internal chain of custody documents related to the initial tests;

(6) A brief description of the HHS-certified laboratory's confirmatory drug (and specimen validity, if applicable) testing procedures, instrumentation, and batch quality control requirements;

(7) Copies of the confirmatory test data for the donor's specimen with all calibrators and controls and copies of all internal chain of custody documents related to the confirmatory tests; and

(8) Copies of the résumé or curriculum vitae for the RP(s) and the certifying technician or certifying scientist of record.

Section 11.24 What HHS-certified laboratory information is available to a federal applicant or employee?

Federal applicants or employees who are subject of a workplace drug test may submit a written request through the MRO and/or the federal agency requesting copies of any records relating to their drug test results or a documentation package as described in Section 11.23(b) and any relevant certification, review, or revocation of certification records. Federal applicants or employees, or their designees, are not permitted access to their specimens collected pursuant to Executive Order 12564, Public Law 100–71, and these Guidelines.

Section 11.25 What types of relationships are prohibited between an HHS-certified laboratory and an MRO?

An HHS-certified laboratory must not enter into any relationship with a federal agency's MRO that may be construed as a potential conflict of interest or derive any financial benefit by having a federal agency use a specific MRO.

This means an MRO may be an employee of the agency or a contractor for the agency; however, an MRO shall not be an employee or agent of or have any financial interest in the HHS-certified laboratory for which the MRO is reviewing drug testing results. Additionally, an MRO shall not derive any financial benefit by having an agency use a specific HHS-certified laboratory or have any agreement with an HHS-certified laboratory that may be construed as a potential conflict of interest.

Subpart L—Instrumented Initial Test Facility (IITF)

Section 12.1 May an IITF test hair specimens for a federal agency's workplace drug testing program?

No, only HHS-certified laboratories are authorized to test hair specimens for federal agency workplace drug testing programs in accordance with these Guidelines.

Subpart M—Medical Review Officer (MRO)

Section 13.1 Who may serve as an MRO?

(a) A currently licensed physician who has:

(1) A Doctor of Medicine (M.D.) or Doctor of Osteopathy (D.O.) degree;

(2) Knowledge regarding the pharmacology and toxicology of illicit drugs;

(3) The training necessary to serve as an MRO as set out in Section 13.3;

(4) Satisfactorily passed an initial examination administered by a nationally recognized entity or subspecialty board that has been approved by the Secretary to certify MROs; and

(5) At least every five years from initial certification, completed requalification training on the topics in Section 13.3 and satisfactorily passed a requalification examination administered by a nationally recognized entity or a subspecialty board that has been approved by the Secretary to certify MROs.

Section 13.2 How are nationally recognized entities or subspecialty boards that certify MROs approved?

All nationally recognized entities or subspecialty boards which seek approval by the Secretary to certify physicians as MROs for federal workplace drug testing programs must submit their qualifications, a sample examination, and other necessary supporting examination materials (*e.g.,* answers, previous examination statistics or other background examination information, if requested). Approval will be based on an objective review of qualifications that include a copy of the MRO applicant application form, documentation that the continuing education courses are accredited by a professional organization, and the delivery method and content of the examination. Each approved MRO certification entity must resubmit their qualifications for approval every two years. The Secretary shall publish at least every two years a notice in the **Federal Register** listing those entities and subspecialty boards that have been approved. This notice is also available on the internet at *http://www.samhsa.gov/workplace/drug-testing.*

Section 13.3 What training is required before a physician may serve as an MRO?

(a) A physician must receive training that includes a thorough review of the following:

(1) The collection procedures used to collect federal agency specimens;

(2) How to interpret test results reported by HHS-certified IITFs and laboratories (*e.g.,* negative, negative/dilute, positive, adulterated, substituted, rejected for testing, and invalid);

(3) Chain of custody, reporting, and recordkeeping requirements for federal agency specimens;

(4) The HHS Mandatory Guidelines for Federal Workplace Drug Testing Programs for all authorized specimen types; and

(5) Procedures for interpretation, review (*e.g.,* donor interview for legitimate medical explanations, review of documentation provided by the donor to support a legitimate medical explanation), and reporting of results specified by any federal agency for which the individual may serve as an MRO.

(b) Certified MROs must complete training on any revisions to these Guidelines prior to their effective date, to continue serving as an MRO for federal agency specimens.

Section 13.4 What are the responsibilities of an MRO?

(a) The MRO must review all positive, adulterated, rejected for testing, invalid, and substituted test results.

(b) Staff under the direct, personal supervision of the MRO may review and report negative and (for urine) negative/dilute test results to the agency's designated representative. The MRO must review at least 5 percent of all negative results reported by the MRO staff to ensure that the MRO staff are properly performing the review process.

(c) The MRO must discuss potential invalid results with the HHS-certified laboratory, as addressed in Section 11.19(d) to determine whether testing at another HHS-certified laboratory may be warranted.

(d) After receiving a report from an HHS-certified laboratory or (for urine) HHS-certified IITF, the MRO must:

(1) Review the information on the MRO copy of the Federal CCF that was received from the collector and the report received from the HHS-certified laboratory or HHS-certified IITF;

(2) Interview the donor when required;

(3) Make a determination regarding the test result; and

(4) Report the verified result to the federal agency.

(e) The MRO must maintain records for a minimum of 2 years while maintaining the confidentiality of the information. The MRO may convert hardcopy records to electronic records for storage and discard the hardcopy records after 6 months.

Section 13.5 What must an MRO do when reviewing a hair specimen's test results?

(a) When the HHS-certified laboratory reports a negative result for the primary (A) hair specimen, the MRO reports a negative result to the agency.

(b) When the HHS-certified laboratory reports multiple results for the primary (A) hair specimen, the MRO must follow the verification procedures described in 13.5(c) through (g) and:

(1) The MRO reports all verified refusal to test results to the federal agency.

(2) If an invalid result was reported in conjunction with a positive, adulterated, or substituted result, the MRO does not report the verified invalid result to the federal agency at this time. The MRO takes action for the verified invalid result(s) for the primary (A) specimen as described in 13.5(f) only when:

(i) The MRO verifies the positive or adulterated result as negative based on a legitimate medical explanation as described in 13.5(c)(2) and 13.5(d)(1); or

(ii) The split (B) specimen is tested and reported as a failure to reconfirm the adulterated or substituted result reported for the primary (A) specimen as described in Section 14.5(b) and 14.5(c).

(c) When the HHS-certified laboratory reports a positive result for the primary (A) specimen, the MRO must contact the donor to determine if there is an explanation for the positive result.

(1) If the donor admits illicit use of the drug(s) that caused the positive result, the MRO reports the test result as positive to the agency.

(2) If the donor provides documentation (*e.g.,* a valid prescription) to support a legitimate medical explanation for the positive result, the MRO reports the test result as negative to the agency.

(i) Passive exposure to a drug (*e.g.,* exposure to marijuana smoke) is not a legitimate medical explanation for a positive drug test result.

(ii) Ingestion of food products containing marijuana is not a legitimate medical explanation for a positive marijuana test result.

(3) If the donor is unable to provide a legitimate medical explanation and there is no admission of illicit use supporting the positive hair test result, the MRO reports a test cancelled result to the agency and takes actions as follows:

(i) If an alternate specimen was collected at the same time as the hair specimen, the MRO directs (in writing) the laboratory who has custody of the donor's alternate specimen to test the specimen. The laboratory and MRO follow the procedures in the Mandatory Guidelines for Federal Workplace Drug Testing Programs for that specimen type.

(ii) If an alternate specimen was not collected at the same time as the hair specimen, the MRO directs the agency to immediately collect an alternate specimen from the donor. The collector, laboratory and MRO follow the procedures in the Mandatory Guidelines for Federal Workplace Drug Testing Programs for the alternate specimen type.

(d) When the HHS-certified laboratory reports an adulterated result for the primary (A) hair specimen, the MRO contacts the donor to determine if the donor has a legitimate medical explanation for the adulterated result.

(1) If the donor provides a legitimate medical explanation, the MRO reports a negative result to the federal agency.

(2) If the donor is unable to provide a legitimate medical explanation, the MRO reports a refusal to test to the federal agency because the hair specimen was adulterated.

(e) When the HHS-certified laboratory reports a substituted result for the primary (A) hair specimen, the MRO reports a refusal to test to the federal agency because the hair specimen was substituted.

(f) When the HHS-certified laboratory reports an invalid result for the primary (A) hair specimen, the MRO reports a test cancelled result to the agency and takes action as follows:

(1) If an alternate specimen was collected at the same time as the hair specimen, the MRO directs (in writing) the laboratory who has custody of the donor's alternate specimen to test the specimen. The laboratory and MRO follow the procedures in the Mandatory Guidelines for Federal Workplace Drug Testing Programs for the alternate specimen type.

(2) If an alternate specimen was not collected at the same time as the hair specimen, the MRO directs the agency to immediately collect an alternate specimen from the donor. The collector, laboratory and MRO follow the procedures in the Mandatory Guidelines for Federal Workplace Drug Testing Programs for the alternate specimen type.

(g) When the HHS-certified laboratory reports a rejected for testing result for the primary (A) specimen, the MRO reports a test cancelled result to the agency and takes action as follows:

(1) If an alternate specimen was collected at the same time as the hair

specimen, the MRO directs (in writing) the laboratory who has custody of the donor's alternate specimen to test the specimen. The laboratory and MRO follow the procedures in the Mandatory Guidelines for Federal Workplace Drug Testing Programs for the alternate specimen type.

(2) If an alternate specimen was not collected at the same time as the hair specimen, the MRO directs the agency to immediately collect an alternate specimen from the donor. The collector, laboratory and MRO follow the procedures in the Mandatory Guidelines for Federal Workplace Drug Testing Programs for the alternate specimen type.

Section 13.6 What action does the MRO take when the collector reports that the donor did not provide a sufficient amount of hair for a drug test?

(a) When another specimen type (*e.g.,* urine, oral fluid) was collected in accordance with section 8.6, the MRO reviews and reports the alternate specimen's test result in accordance with the Mandatory Guidelines for Federal Workplace Drug Testing Programs using the alternate specimen.

(b) If the donor is unable to provide a sufficient amount of the alternate specimen authorized by the federal agency, the MRO consults with the federal agency. The federal agency follows the required procedures in the Mandatory Guidelines for Federal Workplace Drug Testing Programs using the alternate specimen. This includes immediately directing the donor to obtain, within five days, an evaluation from a licensed physician, acceptable to the MRO, who has expertise in the medical issues raised by the donor's failure to provide a specimen. The MRO may perform this evaluation if the MRO has appropriate expertise.

Section 13.7 Who may request a test of a split (B) hair specimen?

(a) For an adulterated or substituted result reported on a primary (A) hair specimen, a donor may request through the MRO that the split (B) specimen be tested by a second HHS-certified laboratory to verify the result reported by the first HHS-certified laboratory.

(b) The donor has 72 hours (from the time the MRO notified the donor that his or her specimen was reported adulterated or substituted to request a test of the split (B) specimen. The MRO must inform the donor that the donor has the opportunity to request a test of the split (B) specimen when the MRO informs the donor that an adulterated or substituted result is being reported to the federal agency on the primary (A) specimen.

Section 13.8 How does an MRO report a primary (A) specimen test result to an agency?

(a) The MRO must report all verified results to an agency using the completed MRO copy of the Federal CCF or a separate report using a letter/memorandum format. The MRO may use various electronic means for reporting (*e.g.,* teleprinter, fax, or computer). Transmissions of the reports must ensure confidentiality. The MRO and external service providers must ensure the confidentiality, integrity, and availability of the data and limit access to any data transmission, storage, and retrieval system.

(b) A verified result may not be reported to the agency until the MRO has completed the review process.

(c) The MRO must send a copy of either the completed MRO copy of the Federal CCF or the separate letter/memorandum report for all adulterated and substituted results.

(d) The MRO must not disclose numerical values of drug test results to the agency.

Section 13.9 What types of relationships are prohibited between an MRO and an HHS-certified laboratory?

An MRO must not be an employee, agent of, or have any financial interest in an HHS-certified laboratory for which the MRO is reviewing drug test results.

This means an MRO must not derive any financial benefit by having an agency use a specific HHS-certified laboratory or have any agreement with the HHS-certified laboratory that may be construed as a potential conflict of interest.

Subpart N—Split Specimen Tests

Section 14.1 When may a split (B) hair specimen be tested?

(a) The donor may request, verbally or in writing, through the MRO that the split (B) hair specimen be tested at a different (*i.e.,* second) HHS-certified laboratory when the primary (A) specimen was determined by the MRO to be adulterated or substituted.

(b) A donor has 72 hours to initiate the request after being informed of the result by the MRO. The MRO must document in the MRO's records the verbal request from the donor to have the split (B) specimen tested.

(c) If a split (B) hair specimen cannot be tested by a second HHS-certified laboratory (*e.g.,* insufficient specimen, lost in transit, split not available, no second HHS-certified laboratory to perform the test), the MRO reports a cancelled test to the federal agency and takes action as follows:

(i) If an alternate specimen was collected at the same time as the hair specimen, the MRO directs (in writing) the laboratory who has custody of the donor's alternate specimen to test the specimen. The laboratory and MRO follow the procedures in the Mandatory Guidelines for Federal Workplace Drug Testing Programs for the alternate specimen type.

(ii) If an alternate specimen was not collected at the same time as the hair specimen, the MRO directs the agency to collect an alternate specimen from the donor. The collector, laboratory and MRO follow the procedures in the Mandatory Guidelines for Federal Workplace Drug Testing Programs for the alternate specimen type.

(d) If a donor chooses not to have the split (B) specimen tested by a second HHS-certified hair laboratory, a federal agency may have a split (B) specimen retested as part of a legal or administrative proceeding to defend an original adulterated or substituted result.

Section 14.2 How does an HHS-certified laboratory test a split (B) hair specimen when the primary (A) specimen was reported adulterated?

(a) The HHS-certified laboratory must use its confirmatory specimen validity test at an established limit of quantification (LOQ) to reconfirm the presence of the adulterant.

(b) The second HHS-certified laboratory may only conduct the confirmatory specimen validity test(s) needed to reconfirm the adulterated result reported by the first HHS-certified laboratory.

Section 14.3 How does an HHS-certified laboratory test a split (B) hair specimen when the primary (A) specimen was reported substituted?

The second HHS-certified laboratory may only conduct the confirmatory specimen validity test(s) needed to reconfirm the substituted result reported by the first HHS-certified laboratory.

Section 14.4 Who receives the split (B) specimen result?

The second HHS-certified laboratory must report the result to the MRO.

Section 14.5 What action(s) does an MRO take after receiving the split (B) hair specimen result from the second HHS-certified laboratory?

The MRO takes the following actions when the second HHS-certified

laboratory reports the result for the split (B) hair specimen as:

(a) *Reconfirmed adulteration and/or substitution result.* The MRO reports reconfirmed to the agency.

(b) *Failed to reconfirm adulteration or substitution.* The MRO reports to the agency a failed to reconfirm result (specify adulterant or not substituted) and cancels both tests. The MRO shall notify the HHS office responsible for coordination of the Drug Free Workplace Program regarding the test results for the specimen.

(c) *Failed to reconfirm an adulterated result and failed to reconfirm a substituted result.* The MRO reports to the agency a failed to reconfirm result [(specify adulterant) and not substituted]. The MRO shall notify the HHS office responsible for coordination of the Drug Free Workplace Program regarding the test results for the specimen.

(d) *Failed to reconfirm an adulterated result and reconfirmed a substituted result.* The MRO reports to the agency a reconfirmed result (substituted) and a failed to reconfirm result (specify adulterant). The MRO tells the agency that it may take action based on the substituted result although Laboratory B failed to reconfirm the adulterated result.

(e) *Failed to reconfirm a substituted result and reconfirmed an adulterated result.* The MRO reports to the agency a reconfirmed result (adulterated) and a failed to reconfirm result (not substituted). The MRO tells the agency that it may take action based on the adulterated result although Laboratory B failed to reconfirm the substituted result.

Section 14.6 How does an MRO report a split (B) specimen test result to an agency?

(a) The MRO must report all verified results to an agency using the completed MRO copy of the Federal CCF or a separate report using a letter/memorandum format. The MRO may use various electronic means for reporting (*e.g.,* teleprinter, fax, or computer). Transmissions of the reports must ensure confidentiality. The MRO and external service providers must ensure the confidentiality, integrity, and availability of the data and limit access to any data transmission, storage, and retrieval system.

(b) A verified result may not be reported to the agency until the MRO has completed the review process.

(c) The MRO must send a copy of either the completed MRO copy of the Federal CCF or the separate letter/memorandum report for all split specimen results.

(d) The MRO must not disclose the numerical values of the drug test results to the agency.

Section 14.7 How long must an HHS-certified laboratory retain a split (B) specimen?

A split (B) specimen is retained for the same period of time that a primary (A) specimen is retained and under the same storage conditions, in accordance with Section 11.20. This applies even for those cases when the split (B) specimen is tested by a second HHS-certified laboratory and the second HHS-certified laboratory does not confirm the original result reported by the first HHS-certified laboratory for the primary (A) specimen.

Subpart O—Criteria for Rejecting a Specimen for Testing

Section 15.1 What discrepancies require an HHS-certified laboratory to report a hair specimen as rejected for testing?

The following discrepancies are considered to be fatal flaws. The HHS-certified laboratory must stop the testing process, reject the specimen for testing, and indicate the reason for rejecting the specimen on the Federal CCF when:

(a) The specimen ID number on the primary (A) or split (B) specimen label/seal does not match the ID number on the Federal CCF, or the ID number is missing either on the Federal CCF or on either specimen label/seal;

(b) The primary (A) specimen label/seal is misapplied, broken or shows evidence of tampering and the split (B) specimen cannot be re-designated as the primary (A) specimen;

(c) The collector's printed name and signature are omitted on the Federal CCF;

(d) There is an insufficient amount of specimen for analysis in the primary (A) specimen unless the split (B) specimen can be re-designated as the primary (A) specimen; or

(e) The accessioner failed to document the primary (A) specimen seal condition on the Federal CCF at the time of accessioning, and the split (B) specimen cannot be re-designated as the primary (A) specimen.

(f) The specimen was received at the HHS-certified laboratory without a CCF;

(g) The CCF was received at the HHS-certified laboratory without a specimen;

(h) The collector performed two separate collections using one CCF;

(i) The physical appearances (other than color) of the primary (A) and split (B) specimen are clearly different;

(j) The laboratory identifies lice or a similar infestation in the hair; or

(k) The HHS-certified laboratory identifies a flaw (other than those specified above) that prevents testing or affects the forensic defensibility of the drug test and cannot be corrected.

Section 15.2 What discrepancies require an HHS-certified laboratory to report a specimen as rejected for testing unless the discrepancy is corrected?

The following discrepancies are considered to be correctable:

(a) If a collector failed to sign the Federal CCF, the HHS-certified laboratory must attempt to recover the collector's signature before reporting the test result. If the collector can provide a memorandum for record recovering the signature, the HHS-certified laboratory may report the test result for the specimen. If, after holding the specimen for at least 5 business days, the HHS-certified laboratory cannot recover the collector's signature, the laboratory must report a rejected for testing result and indicate the reason for the rejected for testing result on the Federal CCF.

(b) If a specimen is submitted using a non-federal form or an expired Federal CCF, the HHS-certified laboratory must test the specimen and also attempt to obtain a memorandum for record explaining why a non-federal form or an expired Federal CCF was used and ensure that the form used contains all the required information. If, after holding the specimen for at least 5 business days, the HHS-certified laboratory cannot obtain a memorandum for record from the collector, the laboratory must report a rejected for testing result and indicate the reason for the rejected for testing result on the report to the MRO.

Section 15.3 What discrepancies are not sufficient to require an HHS-certified laboratory to reject a hair specimen for testing or an MRO to cancel a test?

(a) The following omissions and discrepancies on the Federal CCF that are received by the HHS-certified laboratory should not cause an HHS-certified laboratory to reject a hair specimen or cause an MRO to cancel a test:

(1) An incorrect laboratory name and address appearing at the top of the form;

(2) Incomplete/incorrect/unreadable employer name or address;

(3) MRO name is missing;

(4) Incomplete/incorrect MRO address;

(5) A transposition of numbers in the donor's Social Security Number or employee identification number;

(6) A telephone number is missing/incorrect;

(7) A fax number is missing/incorrect;

(8) A ''drug tests to be performed'' box is not marked;

(9) A ''specimen collection'' box is not marked;

(10) The collection site address is missing;

(11) The collector's printed name is missing but the collector's signature is properly recorded;

(13) The time of collection is not indicated;

(14) The date of collection is not indicated;

(15) Incorrect name of delivery service;

(16) The collector has changed or corrected information by crossing out the original information on either the Federal CCF or specimen label/seal without dating and initialing the change; or

(17) The donor's name inadvertently appears on the HHS-certified laboratory copy of the Federal CCF or on the tamper-evident labels used to seal the specimens.

(b) The following omissions and discrepancies on the Federal CCF that are made at the HHS-certified laboratory should not cause an MRO to cancel a test:

(1) The testing laboratory fails to indicate the correct name and address in the results section when a different laboratory name and address is printed at the top of the Federal CCF;

(2) The accessioner fails to print his or her name;

(3) The certifying scientist or certifying technician fails to print his or her name;

(4) The certifying scientist or certifying technician accidentally initials the Federal CCF rather than signing for a specimen reported as rejected for testing;

(c) The above omissions and discrepancies should occur no more than once a month. The expectation is that each trained collector and HHS-certified laboratory will make every effort to ensure that the Federal CCF is properly completed and that all the information is correct. When an error occurs more than once a month, the MRO must direct the collector or HHS-certified laboratory (whichever is responsible for the error) to immediately take corrective action to prevent the recurrence of the error.

Section 15.4 What discrepancies may require an MRO to cancel a test?

(a) An MRO must attempt to correct the following errors:

(1) The donor's signature is missing on the MRO copy of the Federal CCF and the collector failed to provide a comment that the donor refused to sign the form;

(2) The certifying scientist failed to sign the Federal CCF for a specimen being reported adulterated, invalid, or substituted; or

(3) The electronic report provided by the HHS-certified laboratory does not contain all the data elements required for the HHS standard laboratory electronic report for a specimen being reported adulterated, invalid result, or substituted.

(b) If error (a)(1) occurs, the MRO must contact the collector to obtain a statement to verify that the donor refused to sign the MRO copy. If, after at least 5 business days, the collector cannot provide such a statement, the MRO must cancel the test.

(c) If error (a)(2) occurs, the MRO must obtain a statement from the certifying scientist that they forgot to sign the Federal CCF, but did, in fact, properly conduct the certification review. If, after at least 5 business days, the MRO cannot get a statement from the certifying scientist, the MRO must cancel the test.

(d) If error (a)(3) occurs, the MRO must contact the HHS-certified laboratory. If, after at least 5 business days, the laboratory does not retransmit a corrected electronic report, the MRO must cancel the test.

Subpart P—Laboratory Suspension/Revocation Procedures

Section 16.1 When may the HHS certification of a laboratory be suspended?

These procedures apply when:

(a) The Secretary has notified an HHS-certified laboratory in writing that its certification to perform drug testing under these Guidelines has been suspended or that the Secretary proposes to revoke such certification.

(b) The HHS-certified laboratory has, within 30 days of the date of such notification or within 3 days of the date of such notification when seeking an expedited review of a suspension, requested in writing an opportunity for an informal review of the suspension or proposed revocation.

Section 16.2 What definitions are used for this subpart?

Appellant. Means the HHS-certified laboratory which has been notified of its suspension or proposed revocation of its certification to perform testing and has requested an informal review thereof.

Respondent. Means the person or persons designated by the Secretary in implementing these Guidelines.

Reviewing Official. Means the person or persons designated by the Secretary who will review the suspension or proposed revocation. The reviewing official may be assisted by one or more of the official's employees or consultants in assessing and weighing the scientific and technical evidence and other information submitted by the appellant and respondent on the reasons for the suspension and proposed revocation.

Section 16.3 Are there any limitations on issues subject to review?

The scope of review shall be limited to the facts relevant to any suspension or proposed revocation, the necessary interpretations of those facts, the relevant Mandatory Guidelines for Federal Workplace Drug Testing Programs, and other relevant law. The legal validity of these Guidelines shall not be subject to review under these procedures.

Section 16.4 Who represents the parties?

The appellant's request for review shall specify the name, address, and telephone number of the appellant's representative. In its first written submission to the reviewing official, the respondent shall specify the name, address, and telephone number of the respondent's representative.

Section 16.5 When must a request for informal review be submitted?

(a) Within 30 days of the date of the notice of the suspension or proposed revocation, the appellant must submit a written request to the reviewing official seeking review, unless some other time period is agreed to by the parties. A copy must also be sent to the respondent. The request for review must include a copy of the notice of suspension or proposed revocation, a brief statement of why the decision to suspend or propose revocation is wrong, and the appellant's request for an oral presentation, if desired.

(b) Within 5 days after receiving the request for review, the reviewing official will send an acknowledgment and advise the appellant of the next steps. The reviewing official will also send a copy of the acknowledgment to the respondent.

Section 16.6 What is an abeyance agreement?

Upon mutual agreement of the parties to hold these procedures in abeyance, the reviewing official will stay these procedures for a reasonable time while the laboratory attempts to regain compliance with the Guidelines or the parties otherwise attempt to settle the dispute. As part of an abeyance agreement, the parties can agree to extend the time period for requesting review of the suspension or proposed revocation. If abeyance begins after a request for review has been filed, the appellant shall notify the reviewing official at the end of the abeyance period, advising whether the dispute has been resolved. If the dispute has been resolved, the request for review will be dismissed. If the dispute has not been resolved, the review procedures will begin at the point at which they were interrupted by the abeyance agreement with such modifications to the procedures as the reviewing official deems appropriate.

Section 16.7 What procedures are used to prepare the review file and written argument?

The appellant and the respondent each participate in developing the file for the reviewing official and in submitting written arguments. The procedures for development of the review file and submission of written argument are:

(a) *Appellant's Documents and Brief.* Within 15 days after receiving the acknowledgment of the request for review, the appellant shall submit to the reviewing official the following (with a copy to the respondent):

(1) A review file containing the documents supporting appellant's argument, tabbed and organized chronologically, and accompanied by an index identifying each document. Only essential documents should be submitted to the reviewing official.

(2) A written statement, not to exceed 20 double-spaced pages, explaining why respondent's decision to suspend or propose revocation of appellant's certification is wrong (appellant's brief).

(b) *Respondent's Documents and Brief.* Within 15 days after receiving a copy of the acknowledgment of the request for review, the respondent shall submit to the reviewing official the following (with a copy to the appellant):

(1) A review file containing documents supporting respondent's decision to suspend or revoke appellant's certification to perform drug testing, which is tabbed and organized chronologically, and accompanied by an index identifying each document. Only essential documents should be submitted to the reviewing official.

(2) A written statement, not exceeding 20 double-spaced pages in length, explaining the basis for suspension or proposed revocation (respondent's brief).

(c) *Reply Briefs.* Within 5 days after receiving the opposing party's submission, or 20 days after receiving acknowledgment of the request for review, whichever is later, each party may submit a short reply not to exceed 10 double-spaced pages.

(d) *Cooperative Efforts.* Whenever feasible, the parties should attempt to develop a joint review file.

(e) *Excessive Documentation.* The reviewing official may take any appropriate step to reduce excessive documentation, including the return of or refusal to consider documentation found to be irrelevant, redundant, or unnecessary.

Section 16.8 When is there an opportunity for oral presentation?

(a) *Electing Oral Presentation.* If an opportunity for an oral presentation is desired, the appellant shall request it at the time it submits its written request for review to the reviewing official. The reviewing official will grant the request if the official determines that the decision-making process will be substantially aided by oral presentations and arguments. The reviewing official may also provide for an oral presentation at the official's own initiative or at the request of the respondent.

(b) *Presiding Official.* The reviewing official or designee will be the presiding official responsible for conducting the oral presentation.

(c) *Preliminary Conference.* The presiding official may hold a prehearing conference (usually a telephone conference call) to consider any of the following: simplifying and clarifying issues, stipulations and admissions, limitations on evidence and witnesses that will be presented at the hearing, time allotted for each witness and the hearing altogether, scheduling the hearing, and any other matter that will assist in the review process. Normally, this conference will be conducted informally and off the record; however, the presiding official may, at their discretion, produce a written document summarizing the conference or transcribe the conference, either of which will be made a part of the record.

(d) *Time and Place of the Oral Presentation.* The presiding official will attempt to schedule the oral presentation within 30 days of the date the appellant's request for review is received or within 10 days of submission of the last reply brief, whichever is later. The oral presentation will be held at a time and place determined by the presiding official following consultation with the parties.

(e) *Conduct of the Oral Presentation.*

(1) *General.* The presiding official is responsible for conducting the oral presentation. The presiding official may be assisted by one or more of the official's employees or consultants in conducting the oral presentation and reviewing the evidence. While the oral presentation will be kept as informal as possible, the presiding official may take all necessary steps to ensure an orderly proceeding.

(2) *Burden of Proof/Standard of Proof.* In all cases, the respondent bears the burden of proving by a preponderance of the evidence that its decision to suspend or propose revocation is appropriate. The appellant, however, has a responsibility to respond to the respondent's allegations with evidence and argument to show that the respondent is wrong.

(3) *Admission of Evidence.* The Federal Rules of Evidence do not apply and the presiding official will generally admit all testimonial evidence unless it is clearly irrelevant, immaterial, or unduly repetitious. Each party may make an opening and closing statement, may present witnesses as agreed upon in the prehearing conference or otherwise, and may question the opposing party's witnesses. Since the parties have ample opportunity to prepare the review file, a party may introduce additional documentation during the oral presentation only with the permission of the presiding official. The presiding official may question witnesses directly and take such other steps necessary to ensure an effective and efficient consideration of the evidence, including setting time limitations on direct and cross-examinations.

(4) *Motions.* The presiding official may rule on motions including, for example, motions to exclude or strike redundant or immaterial evidence, motions to dismiss the case for insufficient evidence, or motions for summary judgment. Except for those made during the hearing, all motions and opposition to motions, including argument, must be in writing and be no more than 10 double-spaced pages in length. The presiding official will set a reasonable time for the party opposing the motion to reply.

(5) *Transcripts.* The presiding official shall have the oral presentation transcribed and the transcript shall be

made a part of the record. Either party may request a copy of the transcript and the requesting party shall be responsible for paying for its copy of the transcript.

(f) *Obstruction of Justice or Making of False Statements.* Obstruction of justice or the making of false statements by a witness or any other person may be the basis for a criminal prosecution under 18 U.S.C. 1505 or 1001.

(g) *Post-hearing Procedures.* At their discretion, the presiding official may require or permit the parties to submit post-hearing briefs or proposed findings and conclusions. Each party may submit comments on any major prejudicial errors in the transcript.

Section 16.9 Are there expedited procedures for review of immediate suspension?

(a) *Applicability.* When the Secretary notifies an HHS-certified laboratory in writing that its certification to perform drug testing has been immediately suspended, the appellant may request an expedited review of the suspension and any proposed revocation. The appellant must submit this request in writing to the reviewing official within 3 days of the date the HHS-certified laboratory received notice of the suspension. The request for review must include a copy of the suspension and any proposed revocation, a brief statement of why the decision to suspend and propose revocation is wrong, and the appellant's request for an oral presentation, if desired. A copy of the request for review must also be sent to the respondent.

(b) *Reviewing Official's Response.* As soon as practicable after the request for review is received, the reviewing official will send an acknowledgment with a copy to the respondent.

(c) *Review File and Briefs.* Within 7 days of the date the request for review is received, but no later than 2 days before an oral presentation, each party shall submit to the reviewing official the following:

(1) A review file containing essential documents relevant to the review, which is tabbed, indexed, and organized chronologically; and

(2) A written statement, not to exceed 20 double-spaced pages, explaining the party's position concerning the suspension and any proposed revocation. No reply brief is permitted.

(d) *Oral Presentation.* If an oral presentation is requested by the appellant or otherwise granted by the reviewing official, the presiding official will attempt to schedule the oral presentation within 7–10 days of the date of appellant's request for review at a time and place determined by the presiding official following consultation with the parties. The presiding official may hold a prehearing conference in accordance with Section 16.8(c) and will conduct the oral presentation in accordance with the procedures of Sections 16.8(e), (f), and (g).

(e) *Written Decision.* The reviewing official shall issue a written decision upholding or denying the suspension or proposed revocation and will attempt to issue the decision within 7–10 days of the date of the oral presentation or within 3 days of the date on which the transcript is received or the date of the last submission by either party, whichever is later. All other provisions set forth in Section 16.14 will apply.

(f) *Transmission of Written Communications.* Because of the importance of timeliness for these expedited procedures, all written communications between the parties and between both party and the reviewing official shall be by fax, secured electronic transmissions, or overnight mail.

Section 16.10 Are any types of communications prohibited?

Except for routine administrative and procedural matters, a party shall not communicate with the reviewing or presiding official without notice to the other party.

Section 16.11 How are communications transmitted by the reviewing official?

(a) Because of the importance of a timely review, the reviewing official should normally transmit written communications to either party by fax, secured electronic transmissions, or overnight mail in which case the date of transmission or day following mailing will be considered the date of receipt. In the case of communications sent by regular mail, the date of receipt will be considered 3 days after the date of mailing.

(b) In counting days, include Saturdays, Sundays, and federal holidays. However, if a due date falls on a Saturday, Sunday, or federal holiday, then the due date is the next federal working day.

Section 16.12 What are the authority and responsibilities of the reviewing official?

In addition to any other authority specified in these procedures, the reviewing official and the presiding official, with respect to those authorities involving the oral presentation, shall have the authority to issue orders; examine witnesses; take all steps necessary for the conduct of an orderly hearing; rule on requests and motions; grant extensions of time for good reasons; dismiss for failure to meet deadlines or other requirements; order the parties to submit relevant information or witnesses; remand a case for further action by the respondent; waive or modify these procedures in a specific case, usually with notice to the parties; reconsider a decision of the reviewing official where a party promptly alleges a clear error of fact or law; and to take any other action necessary to resolve disputes in accordance with the objectives of these procedures.

Section 16.13 What administrative records are maintained?

The administrative record of review consists of the review file; other submissions by the parties; transcripts or other records of any meetings, conference calls, or oral presentation; evidence submitted at the oral presentation; and orders and other documents issued by the reviewing and presiding officials.

Section 16.14 What are the requirements for a written decision?

(a) *Issuance of Decision.* The reviewing official shall issue a written decision upholding or denying the suspension or proposed revocation. The decision will set forth the reasons for the decision and describe the basis therefore in the record. Furthermore, the reviewing official may remand the matter to the respondent for such further action as the reviewing official deems appropriate.

(b) *Date of Decision.* The reviewing official will attempt to issue their decision within 15 days of the date of the oral presentation, the date on which the transcript is received, or the date of the last submission by either party, whichever is later. If there is no oral presentation, the decision will normally be issued within 15 days of the date of receipt of the last reply brief. Once issued, the reviewing official will immediately communicate the decision to each party.

(c) *Public Notice.* If the suspension and proposed revocation are upheld, the revocation will become effective immediately and the public will be notified by publication of a notice in the **Federal Register**. If the suspension and proposed revocation are denied, the revocation will not take effect and the suspension will be lifted immediately. Public notice will be given by publication in the **Federal Register**.

Section 16.15 Is there a review of the final administrative action?

Before any legal action is filed in court challenging the suspension or proposed revocation, respondent shall exhaust administrative remedies provided under this subpart, unless otherwise provided by Federal Law. The reviewing official's decision, under Section 16.9(e) or 16.14(a) constitutes final agency action and is ripe for judicial review as of the date of the decision.

[FR Doc. 2020–16432 Filed 9–4–20; 4:15 pm]

BILLING CODE 4162–20–P

FEDERAL REGISTER

Vol. 85 Thursday,

No. 176 September 10, 2020

Part V

The President

Space Policy Directive–5 of September 4, 2020—Cybersecurity Principles for Space Systems

Federal Register
Vol. 85, No. 176
Thursday, September 10, 2020

Presidential Documents

Title 3—

The President

Space Policy Directive–5 of September 4, 2020

Cybersecurity Principles for Space Systems

Memorandum for the Vice President[,] the Secretary of State[,] the Secretary of Defense[,] the Attorney General[,] the Secretary of Commerce[,] the Secretary of Transportation[,] the Secretary of Homeland Security[,] the Director of the Office of Management and Budget[,] the Assistant to the President for National Security Affairs[,] the Director of National Intelligence[,] the Director of the Central Intelligence Agency[,] the Director of the National Security Agency[,] the Director of the National Reconnaissance Office[,] the Administrator of the National Aeronautics and Space Administration[,] the Director of the Office of Science and Technology Policy[,] the Chairman of the Joint Chiefs of Staff[, and] the Chairman of the Federal Communications Commission

Section 1. *Background.* The United States considers unfettered freedom to operate in space vital to advancing the security, economic prosperity, and scientific knowledge of the Nation. Space systems enable key functions such as global communications; positioning, navigation, and timing; scientific observation; exploration; weather monitoring; and multiple vital national security applications. Therefore, it is essential to protect space systems from cyber incidents in order to prevent disruptions to their ability to provide reliable and efficient contributions to the operations of the Nation's critical infrastructure.

Space systems are reliant on information systems and networks from design conceptualization through launch and flight operations. Further, the transmission of command and control and mission information between space vehicles and ground networks relies on the use of radio-frequency-dependent wireless communication channels. These systems, networks, and channels can be vulnerable to malicious activities that can deny, degrade, or disrupt space operations, or even destroy satellites.

Examples of malicious cyber activities harmful to space operations include spoofing sensor data; corrupting sensor systems; jamming or sending unauthorized commands for guidance and control; injecting malicious code; and conducting denial-of-service attacks. Consequences of such activities could include loss of mission data; decreased lifespan or capability of space systems or constellations; or the loss of positive control of space vehicles, potentially resulting in collisions that can impair systems or generate harmful orbital debris.

The National Security Strategy of December 2017 states that ''[t]he United States must maintain our leadership and freedom of action in space.'' As the space domain is contested, it is necessary for developers, manufacturers, owners, and operators of space systems to design, build, operate, and manage them so that they are resilient to cyber incidents and radio-frequency spectrum interference.

Space Policy Directive–3 (SPD–3) of June 18, 2018 (National Space Traffic Management Policy), states that ''[s]atellite and constellation owners should participate in a pre-launch certification process'' that should consider a number of factors, including encryption of satellite command and control links and data protection measures for ground site operations.

The National Cyber Strategy of September 2018 states that my Administration will enhance efforts to protect our space assets and supporting infrastructure

from evolving cyber threats, and will work with industry and international partners to strengthen the cyber resilience of existing and future space systems.

Sec. 2. *Definitions.* For the purposes of this memorandum, the following definitions shall apply:

(a) ''Space System'' means a combination of systems, to include ground systems, sensor networks, and one or more space vehicles, that provides a space-based service. A space system typically has three segments: a ground control network, a space vehicle, and a user or mission network. These systems include Government national security space systems, Government civil space systems, and private space systems.

(b) ''Space Vehicle'' means the portion of a space system that operates in space. Examples include satellites, space stations, launch vehicles, launch vehicle upper stage components, and spacecraft.

(c) ''Positive Control'' means the assurance that a space vehicle will only execute commands transmitted by an authorized source and that those commands are executed in the proper order and at the intended time.

(d) ''Critical space vehicle functions (critical functions)'' means the functions of the vehicle that the operator must maintain to ensure intended operations, positive control, and retention of custody. The failure or compromise of critical space vehicle functions could result in the space vehicle not responding to authorized commands, loss of critical capability, or responding to unauthorized commands.

Sec. 3. *Policy.* Cybersecurity principles and practices that apply to terrestrial systems also apply to space systems. Certain principles and practices, however, are particularly important to space systems. For example, it is critical that cybersecurity measures, including the ability to perform updates and respond to incidents remotely, are integrated into the design of the space vehicle before launch, as most space vehicles in orbit cannot currently be physically accessed. For this reason, integrating cybersecurity into all phases of development and ensuring full life-cycle cybersecurity are critical for space systems. Effective cybersecurity practices arise out of cultures of prevention, active defense, risk management, and sharing best practices.

The United States must manage risks to the growth and prosperity of our commercial space economy. To do so and to strengthen national resilience, it is the policy of the United States that executive departments and agencies (agencies) will foster practices within Government space operations and across the commercial space industry that protect space assets and their supporting infrastructure from cyber threats and ensure continuity of operations.

The cybersecurity principles for space systems set forth in section 4 of this memorandum are established to guide and serve as the foundation for the United States Government approach to the cyber protection of space systems. Agencies are directed to work with the commercial space industry and other non-government space operators, consistent with these principles and with applicable law, to further define best practices, establish cybersecurity-informed norms, and promote improved cybersecurity behaviors throughout the Nation's industrial base for space systems.

Sec. 4. *Principles.* (a) Space systems and their supporting infrastructure, including software, should be developed and operated using risk-based, cybersecurity-informed engineering. Space systems should be developed to continuously monitor, anticipate, and adapt to mitigate evolving malicious cyber activities that could manipulate, deny, degrade, disrupt, destroy, surveil, or eavesdrop on space system operations. Space system configurations should be resourced and actively managed to achieve and maintain an effective and resilient cyber survivability posture throughout the space system lifecycle.

(b) Space system owners and operators should develop and implement cybersecurity plans for their space systems that incorporate capabilities to

ensure operators or automated control center systems can retain or recover positive control of space vehicles. These plans should also ensure the ability to verify the integrity, confidentiality, and availability of critical functions and the missions, services, and data they enable and provide. At a minimum, space system owners and operators should consider, based on risk assessment and tolerance, incorporating in their plans:

(i) Protection against unauthorized access to critical space vehicle functions. This should include safeguarding command, control, and telemetry links using effective and validated authentication or encryption measures designed to remain secure against existing and anticipated threats during the entire mission lifetime;

(ii) Physical protection measures designed to reduce the vulnerabilities of a space vehicle's command, control, and telemetry receiver systems;

(iii) Protection against communications jamming and spoofing, such as signal strength monitoring programs, secured transmitters and receivers, authentication, or effective, validated, and tested encryption measures designed to provide security against existing and anticipated threats during the entire mission lifetime;

(iv) Protection of ground systems, operational technology, and information processing systems through the adoption of deliberate cybersecurity best practices. This adoption should include practices aligned with the National Institute of Standards and Technology's Cybersecurity Framework to reduce the risk of malware infection and malicious access to systems, including from insider threats. Such practices include logical or physical segregation; regular patching; physical security; restrictions on the utilization of portable media; the use of antivirus software; and promoting staff awareness and training inclusive of insider threat mitigation precautions;

(v) Adoption of appropriate cybersecurity hygiene practices, physical security for automated information systems, and intrusion detection methodologies for system elements such as information systems, antennas, terminals, receivers, routers, associated local and wide area networks, and power supplies; and

(vi) Management of supply chain risks that affect cybersecurity of space systems through tracking manufactured products; requiring sourcing from trusted suppliers; identifying counterfeit, fraudulent, and malicious equipment; and assessing other available risk mitigation measures.

(c) Implementation of these principles, through rules, regulations, and guidance, should enhance space system cybersecurity, including through the consideration and adoption, where appropriate, of cybersecurity best practices and norms of behavior.

(d) Space system owners and operators should collaborate to promote the development of best practices, to the extent permitted by applicable law. They should also share threat, warning, and incident information within the space industry, using venues such as Information Sharing and Analysis Centers to the greatest extent possible, consistent with applicable law.

(e) Security measures should be designed to be effective while permitting space system owners and operators to manage appropriate risk tolerances and minimize undue burden, consistent with specific mission requirements, United States national security and national critical functions, space vehicle size, mission duration, maneuverability, and any applicable orbital regimes.

Sec. 5. *General Provisions.* (a) Nothing in this memorandum shall be construed to impair or otherwise affect:

(i) the authority granted by law to an executive department or agency, or the head thereof; or

(ii) the functions of the Director of the Office of Management and Budget relating to budgetary, administrative, or legislative proposals.

(b) This memorandum shall be implemented consistent with applicable law and subject to the availability of appropriations.

(c) This memorandum is not intended to, and does not, create any right or benefit, substantive or procedural, enforceable at law or in equity by any party against the United States, its departments, agencies, or entities, its officers, employees, or agents, or any other person.

(d) The Secretary of Commerce is authorized and directed to publish this memorandum in the *Federal Register*.

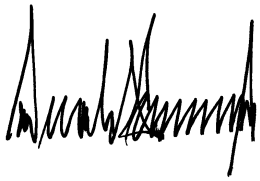

THE WHITE HOUSE,
Washington, September 4, 2020

[FR Doc. 2020–20150
Filed 9–9–20; 11:15 am]
Billing code 3510–07–P

Reader Aids

Federal Register

Vol. 85, No. 176

Thursday, September 10, 2020

CUSTOMER SERVICE AND INFORMATION

Federal Register/Code of Federal Regulations	
General Information, indexes and other finding aids	**202–741–6000**
Laws	**741–6000**
Presidential Documents	
Executive orders and proclamations	**741–6000**
The United States Government Manual	**741–6000**
Other Services	
Electronic and on-line services (voice)	**741–6020**
Privacy Act Compilation	**741–6050**

ELECTRONIC RESEARCH

World Wide Web

Full text of the daily Federal Register, CFR and other publications is located at: **www.govinfo.gov.**

Federal Register information and research tools, including Public Inspection List and electronic text are located at: **www.federalregister.gov.**

E-mail

FEDREGTOC (Daily Federal Register Table of Contents Electronic Mailing List) is an open e-mail service that provides subscribers with a digital form of the Federal Register Table of Contents. The digital form of the Federal Register Table of Contents includes HTML and PDF links to the full text of each document.

To join or leave, go to **https://public.govdelivery.com/accounts/USGPOOFR/subscriber/new**, enter your email address, then follow the instructions to join, leave, or manage your subscription.

PENS (Public Law Electronic Notification Service) is an e-mail service that notifies subscribers of recently enacted laws.

To subscribe, go to **http://listserv.gsa.gov/archives/publaws-l.html and select** *Join or leave the list (or change settings);* then follow the instructions.

FEDREGTOC and **PENS** are mailing lists only. We cannot respond to specific inquiries.

Reference questions. Send questions and comments about the Federal Register system to: **fedreg.info@nara.gov**

The Federal Register staff cannot interpret specific documents or regulations.

FEDERAL REGISTER PAGES AND DATE, SEPTEMBER

54233–54480 1
54481–54884 2
54885–55168 3
55169–55358 4
55359–55586 8
55587–55780 9
55781–56158 10

CFR PARTS AFFECTED DURING SEPTEMBER

At the end of each month the Office of the Federal Register publishes separately a List of CFR Sections Affected (LSA), which lists parts and sections affected by documents published since the revision date of each title.

3 CFR

Proclamations:
9705 (See Proc. 10064) 54877
9759 (See Proc. 10064) 54877
10064 54877
10065 55161
10066 55163
10067 55165
10068 55167

Administrative Orders:
Memorandums:
Memorandum of September 20, 2013 (revoked by Memorandum of September 2, 2020) 55585
Memorandum of August 29, 2020 54883
Memorandum of September 2, 2020 55585
Space Policy Directives:
Space Policy Directive—5 56155

7 CFR

1 55359
905 55359
990 55363

Proposed Rules:
959 55388
1222 54945

8 CFR

Proposed Rules:
103 55597
235 55597

10 CFR

72 54885

12 CFR

624 54233

Proposed Rules:
22 54946
208 54946
339 54946
614 ..... 54946, 55786
615 55786
620 55786
628 55786
760 54946

14 CFR

39 ..... 54481, 54885, 54888, 54891, 54893, 54896, 54900, 55169, 55171, 55781
71 ..... 54233, 55174, 55366, 55368, 55369, 55371
91 55372
95 55174
97 ..... 54902, 54909

Proposed Rules:
25 55198
39 ..... 54286, 54515, 55388, 55391, 55619, 55622, 55624
71 ..... 55200, 55395, 55627

17 CFR

227 54483
239 54483
240 55082
276 55155

18 CFR

292 54638
375 54638

Proposed Rules:
37 55201
38 55201

19 CFR

Proposed Rules:
351 55801

21 CFR

101 55587

Proposed Rules:
300 55802

26 CFR

1 55185

27 CFR

9 54491

29 CFR

Proposed Rules:
2509 55219
2510 54288
2550 55219
4022 55587

31 CFR

501 54911

32 CFR

204 55783
217 55783
199 54914

33 CFR

100 54494
117 54496
165 ..... 54497, 54499, 54501, 55190

Proposed Rules:
165 54946

34 CFR

600 54742

602 54742
668 54742
Proposed Rules:
Ch. III 55802

36 CFR

Proposed Rules:
214 54311
228 54311
261 54311

39 CFR

551 55192

40 CFR

52 ....54504, 54507, 54509, 54510, 54924
55 55377
63 ....55744, 56080
141 54235
143 54235
180 ....54259, 54927, 55193, 55380
300 54931
Proposed Rules:
49 55628
52 ....54947, 54952, 54954, 54960, 54961
81 54517
131 54967
180 55810
300 54970

41 CFR

201 54263

42 CFR

9 54271
402 55385
403 55385
410 54820
411 55385
412 55385
413 54820
414 54820
422 ....54820, 55385
423 ....54820, 55385
460 55385
482 54820
483 ....54820, 55385
485 54820
488 ....54820, 55385
493 ....54820, 55385
Proposed Rules:
Ch. I 56108
405 54327

43 CFR

Proposed Rules:
3170 55940

44 CFR

64 55196

47 CFR

Proposed Rules:
1 54523

49 CFR

543 55386
571 54273
1244 54936
Proposed Rules
571 55396

50 CFR

17 54281
622 ....54513, 54942, 54943, 55592
648 ....54514, 55595
660 55784
679 ....54285, 55595
Proposed Rules:
17 ....54339, 55398
660 54529
679 55243
680 55243

LIST OF PUBLIC LAWS

Note: No public bills which have become law were received by the Office of the Federal Register for inclusion in today's **List of Public Laws**.

Last List August 18, 2020

Public Laws Electronic Notification Service (PENS)

PENS is a free email notification service of newly enacted public laws. To subscribe, go to *https://listserv.gsa.gov/cgi-bin/wa.exe?SUBED1=PUBLAWS-L&A=1*

Note: This service is strictly for email notification of new laws. The text of laws is not available through this service. **PENS** cannot respond to specific inquiries sent to this address.