**DEPARTMENT OF THE INTERIOR**

**Bureau of Land Management**

**43 CFR Part 3170**

**[19X.LLWO310000.L13100000.PP0000]**

**RIN 1004–AE59**

# Oil and Gas Site Security, Oil Measurement, and Gas Measurement Regulations

**AGENCY:** Bureau of Land Management, Interior.

**ACTION:** Proposed rule.

**SUMMARY:** On November 17, 2016, the Bureau of Land Management (BLM) published in the **Federal Register** three final rules dealing with onshore oil and gas measurement and site security. In accordance with Executive Order 13783, Promoting Energy Independence and Economic Growth (March 28, 2017), and Secretary's Order No. 3349, American Energy Independence, (March 29, 2017), the BLM reviewed the affected regulations to determine if certain provisions may have added regulatory burdens that unnecessarily encumber energy production, constrain economic growth, and prevent job creation. As a result of this review, and in light of implementation issues that have arisen, the BLM is now proposing to modify certain provisions to reduce unnecessary and burdensome regulatory requirements.

**DATES:** Send your comments on this proposed rule to the BLM on or before November 9, 2020. *Information Collection Requirements:* If you wish to comment on the information collection requirements in this proposed rule, please note that the Office of Management and Budget (OMB) is required to make a decision concerning the collection of information contained in this proposed rule between 30 and 60 days after publication of this proposed rule in the **Federal Register**. Therefore, comments should be submitted to OMB by October 13, 2020.

**ADDRESSES:**

*Mail:* U.S. Department of the Interior, Director (630), Bureau of Land Management, Mail Stop 2134LM, 1849 C St. NW, Washington, DC 20240, Attention: 1004–AE59.

*Personal or messenger delivery:* U.S. Department of the Interior, Bureau of Land Management, 20 M Street SE, Room 2134 LM, Washington, DC 20003, Attention: Regulatory Affairs.

*Federal eRulemaking Portal: https://www.regulations.gov.* In the Searchbox, enter ''RIN 1004–AE59 and click the ''Search'' button. Follow the instructions at this website.

**For Comments on Information-Collection Activities**

Written comments and suggestions on the information collection requirements should be submitted within 30 days of publication of this notice to *www.reginfo.gov/public/do/PRAMain.* Find this particular information collection by selecting ''Currently under 30-day Review—Open for Public Comments'' or by using the search function. Please provide a copy of your comments to Bureau of Land Management, Faith Bremner, 20 M Street SE, Room 2134 LM, Washington, DC 20003, Attention: Regulatory Affairs (1004–AE59); or by email to *fbremner@blm.gov.* Please reference OMB Control Numbers 1004–0207, 1004–0209, 1004–0210; 1004–0137 in the subject line of your comments.

Do not submit to OMB comments that do not pertain to the proposed rule's information-collection burdens. The BLM is not obligated to consider or include in the Administrative Record for the final rule any comments, which do not relate to the information collection burdens, that you improperly direct to OMB.

**FOR FURTHER INFORMATION CONTACT:** Rebecca Good, Acting Division Chief, Fluid Minerals Division, 307–261–7633 or *rgood@blm.gov,* for information regarding the substance of this proposed rule or information about the BLM's Fluid Minerals program. For questions relating to regulatory process issues, contact Faith Bremner at 202–912–7441 or *fbremner@blm.gov.* Persons who use a telecommunications device for the deaf (TDD) may call the Federal Relay Service (FRS) at 1–800–877–8339, 24 hours a day, 7 days a week, to leave a message or question. You will receive a reply during normal business hours.

**SUPPLEMENTARY INFORMATION:**

I. List of Acronyms
II. Executive Summary
III. Public Comment Procedures
IV. Background
V. Incorporation by Reference of Industry Standards
VI. Discussion of the Proposed Rule
VII. Procedural Matters

## I. List of Acronyms

AFMSS = Automated Fluid Minerals Support System
ATG = Automatic tank gauging
Bbl = Barrels
Bbl/d = Barrels per day
BLM = Bureau of Land Management
Btu = British thermal units
CA = Communitization agreement
CAA = Commingling and allocation agreement
CFR = Code of Federal Regulations
CMS = Coriolis measurement system
DOI = Department of the Interior
E.O. = Executive Order
EGM = Electronic gas metering
FMP = Facility Measurement Point
GAO = Government Accountability Office
GARVS = Gas Annual Reporting and Verification System
GC = Gas chromatograph
GS = General Schedule
GSA = Gas storage agreement
HV = High-volume
IMs = Instructional Memoranda
LACT = Lease Automatic Custody Transfer
LV = Low-volume
Mcf = Thousand cubic feet
Mcf/d = Thousand cubic feet per day
MDS = Measurement data system
NGL = Natural gas liquids
NGS = Natural gas storage facilities
OGOR = Oil and Gas Operations Report
ONRR = Office of Natural Resource Revenue
OPM = Office of Personnel Management
PMT = Production Measurement Team
PRA = Paperwork Reduction Act
QTR = Quantity transaction record
RIA = Regulatory Impact Analysis
SBA = Small Business Administration
Scf = Standard cubic foot
S.O. = Secretarial Order
SME = Subject matter expert
SWD = Salt water disposal
Tcf = Trillion cubic feet
Unit PA = Unit participation area.
VHV = Very-high-volume
VLV = Very-low-volume
WDP = Waste discharge permit
WDW = Water disposal well
WIW = Water injection well

## II. Executive Summary

On November 17, 2016, the Bureau of Land Management (BLM) published in the **Federal Register** the three following final rules: (1) ''Onshore Oil and Gas Operations; Federal and Indian Oil and Gas Leases; Site Security'' (81 FR 81365), codified at 43 CFR subparts 3170 and 3173; (2) ''Onshore Oil and Gas Operations; Federal and Indian Oil and Gas Leases; Measurement of Oil'' (81 FR 81462), codified at 43 CFR subpart 3174; and (3) ''Onshore Oil and Gas Operations; Federal and Indian Oil and Gas Leases; Measurement of Gas'' (81 FR 81516), codified at 43 CFR subpart 3175. Collectively, we refer to these three rules as the ''2016 Final Rules.''

The 2016 Final Rules were prompted by external and internal oversight reviews, which found that many of the BLM's production measurement and accountability policies were outdated and inconsistently applied. The rules addressed some of the Government Accountability Office (GAO) concerns for areas of high risk with regard to production accountability. The rules also provided a process for approving new measurement technologies that meet defined performance standards.

The rules became effective on January 17, 2017.

Since the issuance of the 2016 Final Rules, representatives of the oil and gas industry and other interested stakeholders have raised a number of issues and concerns related to the implementation of the new regulations. The BLM agrees that there have been challenges with implementing some of the provisions of the 2016 Final Rules and has attempted to address some of them through administrative policy directives.[1] However, the BLM can address other provisions only by revising the 2016 Final Rules through a rulemaking action.

In addition, on March 28, 2017, President Trump issued Executive Order (E.O.) 13783, ''Promoting Energy Independence and Economic Growth'' (82 FR 16093). E.O. 13783 holds that ''[i]t is in the national interest to promote clean and safe development of our Nation's vast energy resources, while at the same time avoiding regulatory burdens that unnecessarily encumber energy production, constrain economic growth, and prevent job creation.'' E.O. 13783 directed Federal agencies, including the BLM, to ''review all existing regulations, orders, guidance documents, policies, and any other similar agency actions . . . that potentially burden the development or use of domestically produced energy resources, with particular attention to oil, natural gas, coal, and nuclear energy resources.'' E.O. 13783, Section 2(a). Notably, these Executive Orders did not prescribe specific outcomes, rather they directed review of the regulations, in accordance with all Federal laws.

On March 29, 2017, the Secretary of the Interior issued Secretary's Order (S.O.) No. 3349, ''American Energy Independence.'' It directed DOI bureaus to ''identify all existing [DOI] actions . . . that potentially burden . . . the development or utilization of domestically produced energy resources, with particular attention to oil, natural gas, coal, and nuclear resources.'' S.O. 3349, Section 5(c)(v).

The BLM reviewed the 2016 Final Rules for opportunities to address implementation challenges and to determine if certain provisions may impose regulatory burdens that unnecessarily encumber energy production, constrain economic growth, and prevent job creation. As a result of this review, the BLM is now proposing to modify certain provisions of 43 CFR subparts 3170, 3173, 3174, and 3175 to reduce unnecessary and burdensome regulatory requirements.

The proposed rule would remove or revise requirements that the BLM has found to be unnecessarily burdensome, unclear, inconsistent, or otherwise problematic. The proposed rule would also adopt updated industry standards, where appropriate, and provide for the use of emerging measurement technologies. The BLM has concluded that the proposed changes will not affect its ability to implement GAO and Office of Inspector General (OIG) recommendations regarding oil and gas production reporting and accountability. The BLM does not anticipate that this proposed rule would have a significant impact on royalty revenues. First, as explained in the preamble to the 2016 rules, the goal of the 2016 rules was to reduce uncertainty, remove bias, and increase verifiability in production measurement. While improvements in these areas help to ensure accurate royalty payments, it is difficult to determine their likely overall impact because such improvements do not necessarily increase royalty revenues. See 81 FR 81553. The one provision from the 2016 rules that was specifically assessed in the 2016 Regulatory Impact Analysis (RIA) and estimated to likely increase royalty revenues—the requirement that gas heating values be reported on a dry basis—is not being modified in this proposed rule.

Furthermore, the BLM notes that this proposed rule would continue to address the major issues identified by the GAO in 2010 and 2015. Specifically, the GAO had faulted the BLM's prior regulatory regime for inconsistently tracking how oil and gas were measured and failing to account for current measurement technologies and standards. See 81 FR 81463; 81 FR 81517. The 2016 rule addressed those issues, and this proposed rule would not backtrack on the BLM's progress in these areas. This proposed rule would maintain consistent, nation-wide measurement requirements and would allow for the use of current measurement technologies.

## III. Public Comment Procedures

If you wish to comment on this proposed rule, you may submit your comments to the BLM by mail, personal or messenger delivery, or through *https://www.regulations.gov* (see the **ADDRESSES** section).

Please make your comments on the proposed rule as specific as possible, confine them to issues pertinent to the proposed rule, explain the reason for any changes you recommend, and include any supporting documentation. Where possible, your comments should reference the specific section or paragraph of the proposal that you are addressing. The BLM is not obligated to consider or include in the Administrative Record for the final rule comments that we receive after the close of the comment period (see **DATES**) or comments delivered to an address other than those listed previously (see **ADDRESSES**).

Comments, including names and street addresses of respondents, will be available for public review at the address listed under ''**ADDRESSES:** *Personal or messenger delivery*'' during regular hours (7:45 a.m. to 4:15 p.m.), Monday through Friday, except holidays. Before including your address, telephone number, email address, or other personal identifying information in your comment, be advised that your entire comment—including your personal identifying information—may be made publicly available at any time. While you can ask us in your comment to withhold from public review your personal identifying information, we cannot guarantee that we will be able to do so.

As explained later, this proposed rule would include revisions to information collection requirements that must be approved by the Office of Management and Budget (OMB). If you wish to comment on the revised information collection requirements in this proposed rule, please note that such comments must be sent directly to the OMB in the manner described in the **ADDRESSES** section. The OMB is required to make a decision concerning the collection of information contained in this proposed rule between 30 and 60 days after publication of this document in the **Federal Register**. Therefore, a comment to the OMB on the proposed information collection revisions is best assured of being given full consideration if the OMB receives it by October 13, 2020.

## IV. Background

Americans enjoy a quality of life today that depends largely upon a stable and abundant supply of affordable energy. The Federal energy portfolio managed by the BLM includes oil and gas, coal, oil shale and tar sands, and, increasingly, renewable sources of energy, such as wind, solar and geothermal.

Oil and gas from public and Indian lands are a significant part of this energy mix. For Fiscal Year (FY) 2018, sales of

[1] These administrative policy directives were contained in three Instruction Memoranda (IMs): IM No. 2017–032 (Jan. 17, 2017), IM No. 2018–069 (June 29, 2018), and IM No. 2018–077 (June 29, 2018). All three of these IMs are available on the BLM's website at *https://www.blm.gov/policy/instruction-memorandum.*

oil, gas, and natural gas liquids produced on Federal and Indian lands accounted for approximately 6 percent of all oil, 10 percent of all natural gas, and 7 percent of all natural gas liquids produced in the United States.

The BLM manages the Federal Government's onshore subsurface mineral estate—about 700 million acres (30 percent of the U.S. landmass)—for the benefit of the American public. It also manages some aspects of oil and gas development for Indian tribes (not including the Osage Tribe).

Consistent with statutory requirements, Federal lease contracts with private parties specify that royalties are owed on all production removed or sold from Federal and Indian oil and gas leases. The basis for those royalty payments is the measured volume and quality of the production from those leases. In FY 2018, over $2.14 billion in Federal royalties, rental payments, bonus bids, and other revenues, were generated from Federal onshore oil and gas leases. These revenues were split between the U.S. Treasury and the States where the development occurred. Also in FY 2018, over $830 million in royalties, rental payments and other revenues were generated from tribal oil and gas leases. All of these revenues were distributed to the appropriate tribes and individual allotment owners.

Given the magnitude of this production and the BLM's statutory management obligations, it is critically important that the BLM ensure that operators accurately measure, report, and account for that production. To that end, the BLM has instituted regulations relating to site security, oil measurement, and gas measurement. The BLM maintains an inspection and enforcement program to ensure that operators comply with these regulations. Operators are required to report production volumes and submit royalty payments to the Office of Natural Resources Revenue (ONRR). The ONRR maintains an audit program to ensure that the government receives all royalties owed.

The basis for this proposed rule is the Secretary of the Interior's authority under various Federal and Indian mineral leasing laws to manage oil and gas operations. These mineral leasing laws are: The Mineral Leasing Act of 1920, 30 U.S.C. 181 *et seq.;* the Mineral Leasing Act for Acquired Lands, 30 U.S.C. 351 *et seq.;* the Federal Oil and Gas Royalty Management Act of 1982, 30 U.S.C. 1701 *et seq.;* the Indian Mineral Leasing Act, 25 U.S.C. 396a *et seq.;* the Act of March 3, 1909, 25 U.S.C. 396; the Indian Mineral Development Act, 25 U.S.C. 2101 *et seq.;* and the Federal Land Policy and Management Act, 43 U.S.C. 1701 *et seq*. Each of these statutes gives the Secretary the authority to promulgate necessary and appropriate rules and regulations governing Federal and Indian (except Osage Tribe) oil and gas leases. See 30 U.S.C. 189; 30 U.S.C. 359; 25 U.S.C. 396d; 25 U.S.C. 396; 25 U.S.C. 2107; and 43 U.S.C. 1740.

In recognition of the fact that not all oil and gas wells are identical due to geology and other circumstances, the Mineral Leasing Act provides the Secretary with statutory authority to reduce royalty rates ''for the purposes of encouraging the greatest ultimate recovery of [oil and gas] and in the interest of conservation of natural resources,'' whenever it is necessary to do so in order to ''promote development'' or because the lease could not be ''successfully operated'' otherwise. 30 U.S.C. 209. This provision acknowledges the changing economics of Federal oil and gas wells and provides guidance that, in cases such as marginal wells, the Secretary has discretion to prioritize production over royalties to ensure the maximum recovery of the resources.

The primary statutory authority underpinning the BLM's site security and measurement regulations is in the Federal Oil and Gas Royalty Management Act of 1982 (FOGRMA) (30 U.S.C. 1701–1756). Congress enacted FOGRMA upon finding that ''the system of accounting with respect to royalties and other payments due and owing on oil and gas produced from [Federal and Indian] lease sites is archaic and inadequate.'' 30 U.S.C. 1701(a)(2). Among Congress' purposes in enacting FOGRMA was ''to define the authorities and responsibilities of the Secretary of the Interior to implement and maintain a royalty management system'' and ''to require the development of enforcement practices that ensure the prompt and proper collection and disbursement of oil and gas revenues owed to the United States and Indian lessors.'' 30 U.S.C. 1701(b)(2)–(3). FOGRMA states that the Secretary ''shall establish a comprehensive inspection, collection and fiscal and production accounting and auditing system to provide the capability to accurately determine oil and gas royalties, interest, fines, penalties, fees, deposits, and other payments owed, and to collect and account for such amounts in a timely manner.'' 30 U.S.C. 1711(a). FOGRMA authorizes enforcement of this system through inspections, audits, investigations, and civil penalties. 30 U.S.C. 1711, 1717–19. FOGRMA also states that an operator shall develop and comply with a site security plan that conforms ''with such minimum standards as the Secretary may prescribe by rule, taking into account the variety of circumstances at lease sites.'' 30 U.S.C. 1712(b). FOGRMA contains a ''broad grant of rulemaking authority to achieve its objectives.'' *Wyoming* v. *DOI,* 2017 WL 161428, *6 (D. Wyo. 2017). Specifically, FOGRMA states that ''the Secretary shall prescribe such rules and regulations as he deems reasonably necessary to carry out this chapter.'' 30 U.S.C. 1751(a).

The Secretary's authority to regulate onshore oil and gas operations under the mineral leasing laws has been delegated to the BLM. In implementing this authority, the BLM has issued regulations governing onshore Federal and Indian oil and gas production. This proposed rule would modify the BLM's regulations pertaining to site security and the measurement of oil and gas produced or sold from a lease.

The site security requirements in this proposed rule would ensure the proper and secure handling of production from Federal and Indian onshore oil and gas leases. The proper handling of this production is essential to accurate measurement, proper reporting, and overall production accountability. The oil and gas measurement requirements of this proposed rule would ensure accurate measurement and reporting of onshore oil and gas production. Taken together, the requirements of this proposed rule would ensure that the American public, Indian tribes, and allottees receive royalties owed to them on oil and gas production.

On November 17, 2016, the BLM published in the **Federal Register** the three final rules: (1) ''Onshore Oil and Gas Operations; Federal and Indian Oil and Gas Leases; Site Security'' (81 FR 81365), codified at 43 CFR subparts 3170 and 3173; (2) ''Onshore Oil and Gas Operations; Federal and Indian Oil and Gas Leases; Measurement of Oil'' (81 FR 81462), codified at 43 CFR subpart 3174; and (3) ''Onshore Oil and Gas Operations; Federal and Indian Oil and Gas Leases; Measurement of Gas'' (81 FR 81516), codified at 43 CFR subpart 3175.

The 2016 Final Rules were prompted by external and internal oversight reviews, which found that many of the BLM's production measurement and accountability policies were outdated and inconsistently applied. The rules addressed the concerns raised by the GAO that led the GAO to designate DOI's onshore production accountability as an area of high risk. GAO considers a program or operation

to be high risk when, after evaluation, the program or operation is determined to be vulnerable to fraud, waste, abuse, and mismanagement, or in need of transformation. (*https://www.gao.gov/highrisk/overview*) The 2016 Final Rules also provided a process for approving new measurement technologies that meet defined performance goals. The rules became effective on January 17, 2017.

On March 28, 2017, President Trump issued Executive Order (E.O.) 13783, ''Promoting Energy Independence and Economic Growth'' (82 FR 16093). E.O. 13783 directed Federal agencies, including the BLM, to ''review all existing regulations, orders, guidance documents, policies, and any other similar agency actions. . . that potentially burden the development or use of domestically produced energy resources, with particular attention to oil, natural gas, coal, and nuclear energy resources.'' E.O. 13783, Section 2(a). On March 29, 2017, then Secretary of the Interior Ryan Zinke issued S.O. 3349, entitled, ''American Energy Independence,'' to implement E.O. 13783. S.O. 3349 directed DOI bureaus to ''identify all existing [DOI] actions . . . that potentially burden . . . the development or utilization of domestically produced energy resources, with particular attention to oil, natural gas, coal, and nuclear resources.'' S.O. 3349, Section 5(c)(v).

Additionally, once the BLM began enforcing the 2016 Final Rules, the BLM became aware of practical implementation challenges associated with the rules. These challenges include differing interpretations of specific rule language among industry and BLM personnel, as well as the identification of less burdensome approaches that would achieve the same performance outcomes sought by the 2016 Final Rules. For example, Lease Automatic Custody Transfer (LACT) systems (composed of a meter, ability to prove the meter, devices for determining temperature, pressure, and liquid sampling, and a means for determining nonmerchantable oil, referenced under existing § 3174.8(b)) are required to follow the industry standard API chapter 6.1 (API 6.1). The use of this API standard created confusion both within industry and the BLM with respect to what equipment was required as opposed to optional. To eliminate this confusion, this proposed rule, in § 3174.100 through § 3174.108, would remove the reference to API 6.1 and would list the required equipment for Facility Measurement Point (FMP) LACT systems. Other examples of implementation challenges the BLM encountered include:

- The delay in the development of the AFMSS 2 system (the means by which operators would apply for FMP numbers) undermined the ''phase-in'' periods in subpart 3174, as those phase-in periods were based on the dates on which operators were required to apply for FMP numbers.
- There were questions about how the rules should be applied to situations not specifically addressed in the regulation text, including temporary measurement equipment and gas storage agreements.
- Some operators employed water-vapor-detection devices that were not designed for natural gas applications, creating the potential for misreporting of hydrocarbon liquids as water.
- The time period indicated by the word ''monthly'' was found in practice not to be clear.
- The meaning of ''normal'' operating conditions for meter proving under subpart 3174 proved not to be clear when implemented.
- The recordkeeping requirements for water-draining operations in subpart 3173 proved to be burdensome.

On June 22, 2017, the Department of the Interior (Interior) published a notice in the **Federal Register** requesting public input on how Interior could improve implementation of various regulatory reform initiatives—including those contained in E.O. 13783 and S.O. 3349—and identify regulations for repeal, replacement, or modification. 82 FR 28429 (June 22, 2017). Among the comments Interior received in response to this request were five comments that directly addressed the site security and measurement regulations. Among the commenters were an individual, an oil and gas exploration and production company, two industry trade associations, and an Alaska Native Regional Corporation. The comments asked the BLM to make certain changes to the regulations, including: Updating the list of incorporated industry standards; providing for automatic acceptance of measurement devices meeting certain standards; more evenly phasing-in the subparts 3173 and 3174 requirements; preserving existing variances, commingling agreements, and off-site measurement approvals; accommodating ''economically marginal'' properties; and, reducing the frequency of required meter provings and meter-tube inspections.

In light of the foregoing, the BLM reviewed the 2016 Final Rules for opportunities to address the implementation challenges and to determine if certain provisions may have added regulatory burdens that unnecessarily encumber energy production, constrain economic growth, and prevent job creation. As a result of this review, the BLM is now proposing to modify certain provisions of 43 CFR subparts 3170, 3173, 3174, and 3175 to remedy implementation issues and reduce unnecessary and burdensome regulatory requirements.

When the BLM issued the 2016 Final Rules, it determined that none of the rules were economically significant according the criteria in E.O. 12866, ''Regulatory Planning and Review.'' However, regardless of classification under E.O. 12866, the 2016 Final Rules posed considerable costs to industry and the BLM.

The BLM examined the burdens to industry and the BLM in its RIA for each of the 2016 Final Rules. Those estimated burdens are summarized as follows:

- For 43 CFR subpart 3173, $29.6 million in each of the first 3 years and $14.5 million per year thereafter (see 2016 RIA for subpart 3173, at p. 13);
- For 43 CFR subpart 3174, $6.1 million in each of the first 3 years and $4.9 million per year thereafter (see 2016 RIA for subpart 3174, at p. 11); and
- For 43 CFR subpart 3175, $20.3 million in each of the first 3 years and $12.4 million per year thereafter (see 2016 RIA for subpart 3175, at p. 11).

In developing this proposed rule, the BLM has sought to reduce the regulatory burdens associated with the 2016 Final Rules while maintaining appropriate safeguards to ensure production accountability. While the proposed revisions would streamline, reduce, or eliminate some of the burdens associated with the 2016 Final Rules, the BLM believes that the 2019 revisions would not compromise the government's ability to ensure accurate and reliable royalty collection. The BLM would maintain its capacity to ensure a fair return to the American public and the tribes from oil and gas operations on the Federal and Indian mineral estate. Doing so without unduly burdening development, to ensure the Nation's energy security and independence, balances its royalty mission with the goals stated in E.O. 13783 and S.O. 3349 in a fully complimentary and appropriate manner.

The BLM notes that, while the BLM was separately reviewing the 2016 Final Rules and considering appropriate revisions, the Department of the Interior's Royalty Policy Committee (RPC), Subcommittee on Planning, Analysis, and Competitiveness, recommended that the BLM revise the 2016 Final Rules. The BLM is aware that the U.S. District Court for the District of

Montana has enjoined ''further use or reliance on'' recommendations issued by the RPC. *Western Organization of Resource Councils* v. *David Bernhardt,* 9:18–cv–00139–DWM (D. Mont. 8/13/2019). To ensure compliance with the District Court's injunction, the BLM reviewed the RPC's recommendations and has confirmed that this proposed rule does not use or rely on RPC recommendations. Rather, the BLM is relying on facts, analysis, and recommendations, as set forth in the Background section of this proposed rule, that are independent of any recommendations of the RPC, including its subcommittees. To be clear, the BLM is *not* relying on any RPC recommendation in this proposed rule and this proposed rule is not intended to implement any RPC recommendation. Furthermore, the BLM requests that commenters refrain from using or relying on RPC recommendations in their comments.

## V. Incorporation by Reference of Industry Standards

This proposed rule would incorporate a number of industry standards and recommended practices, either in whole or in part, without republishing the standards in their entirety in the CFR, a practice known as incorporating by reference (IBR). These standards have been developed through a consensus process, facilitated by the API, with input from the oil and gas industry and Federal agencies with oil and gas operational oversight responsibilities. The BLM has reviewed these standards and determined that they would achieve the intent of 43 CFR 3174.31 through 3174.180 and 43 CFR 3175.31 through 3175.140 of this proposed rule. The legal effect of IBR is that the incorporated standards would become regulatory requirements. With the approval of the Director of the Federal Register, this proposed rule would incorporate the current versions of the standards listed.

Some of the standards referenced in this section would be incorporated in their entirety. For other standards, the BLM would incorporate only those sections that are relevant to the rule, meet the intent of §§ 3174.30 and 3175.30 of the proposed rule, and do not need further clarification.

The National Technology Transfer and Advancement Act (NTTAA), Public Law 104–113 (NTTAA), 15 U.S.C. 3701 *et seq.* (Pub. L. 104–113), charges, with certain exceptions, that ''all Federal agencies and departments shall use technical standards that are developed or adopted by voluntary consensus standards bodies, using such technical standards as a means to carry out policy objectives or activities determined by the agencies and departments.'' The BLM may incorporate these standards into its regulations by reference without republishing the standards in their entirety in the regulations. The legal effect of incorporation by reference is that the incorporated standards become regulatory requirements. This incorporated material, like any other regulation, has the force and effect of law. Operators, lessees, and other regulated parties must comply with the documents incorporated by reference in the regulations.

The incorporation of industry standards follows the requirements found in 1 CFR part 51. The industry standards in this proposed rule are eligible for incorporation under 1 CFR 51.7 because, among other things, they would substantially reduce the volume of material published in the **Federal Register**; the standards are published, bound, numbered, and organized; and the standards incorporated are readily available to the general public through purchase from the standards organization or through inspection at any BLM office with oil and gas administrative responsibilities (1 CFR 51.7(a)(3) and (4)). The language of incorporation in §§ 3174.30 and 3175.30 meets the requirements of 1 CFR 51.9. Where appropriate, the BLM would incorporate by reference an industry standard governing a particular process and then impose requirements that add to or modify the requirements imposed by that standard (*e.g.,* the BLM sets a specific value for a variable where the industry standard proposed a range of values or options).

All material that is proposed to be incorporated by reference is available for inspection at the Bureau of Land Management, Division of Fluid Minerals, 20 M Street SE, Washington, DC 20003, 202–912–7162; and at all BLM offices with jurisdiction over oil and gas activities; and is available from the sources listed below. Before visiting a BLM office during the Covid–19 pandemic, please call ahead to confirm that the office is open to the public. If it is not open, you may make an appointment to visit the office.

All American Gas Association (AGA) documents are available for inspection and purchase from AGA, 400 North Capitol Street NW, Suite 450, Washington, DC 20001; telephone 202–824–7000. All of the API materials are available for inspection and purchase at the API, 1220 L Street NW, Washington, DC 20005; telephone 202–682–8000; API also offers free, read-only access to some of the material at *http://publications.api.org.*

The standards that are proposed to be incorporated are summarized as part of the section-by-section analysis for §§ 3174.30 and 3175.30 in section V of this preamble.

## VI. Discussion of the Proposed Rule

### 1. Summary

The following is a summary of the proposed modifications to subparts 3170, 3173, 3174, and 3175:

43 CFR subpart 3170—Onshore Oil and Gas Production: General

- Various changes are required to conform with the substantive changes to 43 CFR subparts 3173, 3174, and 3175.

43 CFR subparts 3173—Requirements for Site Security and Production Handling

- Reduce certain equipment seal requirements for equipment locations deemed to be of low risk to mishandling or theft;
- Reduce recordkeeping requirements associated with water draining operations;
- Reduce requirements for co-located facility on-site facility diagrams;
- Remove a requirement to submit a new site facility diagram when change of operator occurs;
- Increase volume thresholds for submitting FMP applications; and
- Remove immediate assessment for seals associated with LACT units.

43 CFR subpart 3174—Oil Measurement

- Update all incorporated API standards to the latest published edition;
- Create a third low-volume FMP category with no measurement uncertainty requirements;
- Add Production Measurement Team (PMT) review and BLM approval requirements for electronic thermometers, LACT sampling systems, temperature and pressure transducers, and temperature averaging devices;
- Delay the requirement for using BLM-approved equipment on existing high-volume FMPs and low-volume FMPs until such time as the equipment is replaced or the FMP elevates to a very-high-volume FMP; and
- Remove the immediate assessment for failure to notify the BLM of a LACT component failure.

43 CFR subpart 3175—Gas Measurement

- Update all incorporated API standards to the latest published edition;
- Add PMT review and BLM approval requirements for Gas

Chromatograph (GC) software and water vapor detection methods;

• Reduce basic meter-tube inspection frequency and remove detailed meter-tube inspection requirement for low-volume FMPs;

• Add initial meter-tube inspections for high- and very-high volume FMPs;

• Eliminate the requirement of installing composite samplers or on-line GCs for very-high volume FMPs; and

• Add language to make portions of the rule apply to gas meters associated with gas storage agreements.

The proposed modifications to subparts 3170, 3173, 3174, and 3175 are described in detail in the following section-by-section discussion.

*B. Section-by-Section Discussion*

The following discussion addresses the proposed changes from the existing regulation. If a provision is not specifically discussed in this section-by-section analysis, then the provision is essentially the same as the existing regulation.

1. Section-by-Section Discussion for Changes to Subpart 3170

The following table provides a cross-walk comparison of proposed subpart 3170 to the corresponding sections in existing subpart 3170:

| Existing subpart 3170 sec. | Proposed subpart 3170 sec. |
|---|---|
| 3170.1 Authority | 3170.1 Authority. |
| 3170.2 Scope | 3170.2 Scope. |
| 3170.3 Definitions and acronyms | 3170.10 Definitions and acronyms. |
| 3170.4 Prohibitions against by-pass and tampering | 3170.20 Prohibitions against by-pass and tampering. |
| 3170.5 [Reserved] | 3170.30 Alternative measurement equipment and procedures. |
| 3170.6 Variances | 3170.40 Variances. |
| 3170.7 Required recordkeeping, records retention, and records submission. | 3170.50 Required recordkeeping, records retention, and records submission. |
| 3170.8 Appeal procedures | 3170.60 Appeal procedures. |
| 3170.9 Enforcement | 3170.70 Enforcement. |

The following discussion addresses section-by-section changes in the proposed subparts 3170 from the existing subparts 3170.

Section 3170.2 Scope

The BLM is proposing to add a new paragraph (f) to § 3170.2. Proposed § 3170.2(f) would expand the scope of the subpart 3170 regulations to include ''measurement points on BLM-managed gas-storage agreements.'' Proposed subpart 3175 would add requirements for gas-storage-agreement measurement points (discussed in detail later), thus necessitating this amendment to the Scope provision.

The BLM is not proposing any other amendments to the Scope provision for subpart 3170. However, the BLM notes that industry representatives have recommended that the BLM set a Federal-interest threshold for application of its site-security, oil-measurement, and gas-measurement regulations to units and Communitization Agreements (CAs) (created for the cooperative development of multiple leases in a State regulatory agency's assigned drilling spacing (43 CFR 3217.11)) that produce a mix of Federal and non-Federal oil and gas. The rationale for this suggestion appears to be that the burdens associated with BLM regulation of site security and measurement at a unit or CA should be justified by a significant Federal interest in that unit or CA. The BLM has considered this suggestion, but has not put forth a proposed Federal-interest threshold due to the difficulty of identifying a threshold that would satisfy the BLM's obligations under FOGRMA and that would protect the Federal royalty interest in the variety of circumstances under which Federal oil and gas production occurs. The BLM is requesting comment on whether it should establish a Federal-interest threshold for applying its site-security and oil- and gas-measurement regulations to units and CAs. The BLM is particularly interested in comment on the following: The costs and benefits of setting a Federal-interest threshold; what an appropriate threshold would be; whether, and to what extent, such a threshold would jeopardize the Federal royalty interest or fail to satisfy the BLM's obligations under FOGRMA; and, whether a similar threshold could be adopted for applying the regulations to units and CAs producing Indian oil and gas. Finally, the BLM recognizes that the States in which Federal and Indian oil and gas production occurs have interests that may be impacted by BLM regulation of mixed-ownership units and CAs; the BLM therefore specifically requests comment from the governments of those States on this issue.

Section 3170.1 Definitions and Acronyms

This proposed section corresponds to existing § 3170.3 and would define the terms that are used in more than one part 3170 subpart. The proposed rule would renumber the section to § 3170.10 for consistency of numbering across the part 3170 subparts.

A new definition for ''Alarm log'' would be added in proposed § 3170.10. Since the term would be used in proposed subparts 3174 and 3175, its definition belongs in § 3170.10.

The proposed rule would delete the definition for ''API (followed by a number).'' This definition was originally needed to accommodate an existing requirement that operators identify certain wells by their API numbers. Proposed changes to subparts 3173, 3174, and 3175 would delete all references to API well numbers and require operators to identify wells by their US well numbers. API transferred the unique well identifier standard to the Professional Petroleum Data Management (PPDM) in 2010. At that time, PPDM created the US well number as the new industry standard for identifying oil and gas wells.

The proposed rule would modify the existing definition for ''By-pass.'' The revised definition would state that piping around a meter with a double block and bleed valve or a series of valves that ensures valve integrity that is effectively sealed as required under proposed § 3173.20 would not be considered a by-pass where approved by the BLM. The BLM believes the proposed change to the definition would allow for industry innovation in measurement while ensuring the FMP allows for oil or gas to flow with accountability.

The proposed rule would modify the definition of ''Configuration log'' and move it from existing § 3175.10 to proposed § 3170.10 because the term is

used in more than one part 3170 subpart. The proposed change to the definition would align it with the industry standard, API Chapter 21.1 Flow Measurement Using Electronic Metering Systems—electronic Gas Measurement—Second Edition, thereby preventing confusion among industry and the BLM as to the meaning of the term.

The BLM proposes to move the definition for ''Event log'' from existing subparts 3174 and 3175, where the term is used, to proposed § 3170.10. This proposed rule would also modify the existing definition of ''event log'' to align it with the current industry standard published in API Chapter 21.1 Flow Measurement Using Electronic Metering Systems—electronic Gas Measurement—Second Edition. The proposed modification to the definition would add clarity and eliminate confusion over the use of the term by industry and the BLM.

The BLM is proposing several changes to the definition of a ''Facility measurement point (FMP).'' First, the definition would be expanded to include not only measurement affecting the calculation of the volume and quality of production from a Federal or Indian lease, unit Participating Area (PA) (part of unit area which has proven to be productive of oil or gas in paying quantities or which is necessary for unit operations and to which production is allocated), or CA for which royalty is owed, but also measurement affecting the calculation of the volume and quality of the production on native gas or oil from gas storage agreements, which royalty is also owed.

Second, the proposed rule would remove from the FMP definition's second sentence the clause ''but is not limited to, the approved point of royalty measurement and.'' Upon review, the BLM does not foresee any circumstances under which an FMP is not relevant to the determination of the allocation of production to Federal or Indian leases, unit PAs, or CAs. Therefore, the clause was removed and the proposed definition reads, ''An FMP includes all measurement points relevant to determining the allocation of production to Federal or Indian leases, unit PAs, or CAs.''

Third, the BLM is proposing to remove the fourth sentence from the existing definition, ''An FMP also includes a meter or measurement facility used in the determination of the volume or quality of royalty-bearing oil or gas produced before BLM approval of an FMP under § 3173.12.'' The proposed definition of FMP is not couched in terms of ''BLM-approved'' measurement points as the existing definition is written. Under the plain terms of the proposed definition, a measurement point affecting royalty or injection or withdrawal fees would be an FMP, even in the absence of BLM approval. The fourth sentence of the existing definition is therefore no longer necessary.

Fourth, the BLM is proposing to reword the last sentence in the existing definition for an FMP that now says the BLM will not approve a gas processing plant tailgate meter located off the lease, unit or CA, as an FMP. Instead, the proposed rule would change the last sentence to say that an FMP cannot be located at the tailgate of a gas-processing plant located off the lease, unit, or CA. This change would reflect proposed changes to the BLM's FMP number approval process. Existing § 3173.12(a) and (b) would be deleted. Existing § 3173.12(b) says the BLM will not approve as an FMP a gas processing plant tailgate meter located off the lease, unit, or communitized area. The proposed change to the definition would incorporate the intent of the existing § 3173.12(b) deleted paragraph.

The last proposed change to the existing FMP definition involves adding a sentence to the FMP definition that would resolve the confusion over measuring flared volumes that has arisen since the BLM published its waste prevention regulations (43 CFR subpart 3179). In the proposed FMP definition, measurement points for flared volumes are not FMPs, even though royalty may be due on the flared volumes. Measurement and reporting requirements for flared gas are contained in 43 CFR 3179.301.

In addition to the proposed changes to the FMP definition, the BLM is proposing to add a definition for ''FMP number.'' The FMP number would be the number that the BLM would assign to the FMP after reviewing the operator's FMP number application. This change would reflect proposed changes to the BLM's FMP-number approval process (see discussion of proposed § 3173.60 later in this preamble).

The proposed rule would relocate the definition for ''Land description'' from existing § 3173.1 to proposed § 3170.10, with a minor revision. The term ''Land description'' is used in subparts 3170 and 3173, so it belongs in § 3170.10. The revision would acknowledge that the U.S. Department of Interior's Manual of Surveying Instructions is periodically amended and that the most recent version would apply to specifications used in land descriptions.

The proposed rule would add a definition for ''Measurement data system (MDS),'' which does not appear in the existing rule. The definition is needed because proposed subparts 3174 and 3175 would use this new term. Since this definition is used in more than one subpart, it should be located in proposed § 3170.10.

Proposed § 3170.10 would add a new definition for ''Notify.'' Existing part 3170 does not have a definition for ''Notify,'' despite the fact the term is used throughout its subparts. In the existing regulation, responding to comments on § 3174.7(d) and (e), the BLM agreed with the commenters the term ''Notify'' was ambiguous and required a definition. Notify could mean a Sundry Notice, phone call, or many other forms of communication. The operators were concerned they would be notifying the BLM in a manner consistent with the regulation. In addition, there was a concern the BLM would interpret the term differently across field offices. In one field office the term ''Notify'' might mean Sundry Notice, while in another a phone call would suffice. Although the BLM defined ''Notify'' in the existing subpart 3174 preamble, the definition for ''Notify'' did not appear in the final regulation text in subpart 3170 or subpart 3174. Since the term ''Notify'' appears throughout the 3170 subpart, the BLM proposed to include the definition in subpart 3170. The BLM seeks to rectify this oversight by including the definition for ''Notify'' in proposed subpart 3170.

The proposed rule would relocate the definition of ''Permanent measurement facility'' from existing § 3173.1 to § 3170.10. The proposed rule would also change the length of time that equipment used to determine the quantity or quality of production or to store production could be used at an FMP before it would be considered a permanent measurement facility. The existing definition defines permanent as being 6 months or longer. The 6-month standard was based on the BLM's typical time frame for conducting an initial environmental inspection of production facilities after a well has been completed. The revised rule would set a 3-months standard that would more accurately reflect the concept of permanent facilities. The BLM believes 3 months is a sufficient amount of time for operators to construct facilities and begin use of an FMP number.

The proposed § 3170.10 definition for Production Measurement Team (PMT) would delete the last sentence which states the purpose of the PMT. The final sentence of the definition is redundant

and the BLM believes the intent of the purpose is already contained within the first sentence.

Proposed § 3170.10 would add a definition for ''Temporary measurement facility.'' The existing rule does not address temporary measurement, but proposed subparts 3174 and 3175 would. This definition would specify that any measurement equipment in place for less than 3 months would be considered temporary and would not need an FMP number even though the FMP is being used to measure production for the purposes of royalty collection.

Proposed § 3170.10 would add the new definition ''US well number'' to accommodate a proposed requirement that operators switch from using API well numbers to identify their wells to using US well numbers. Created by the PPDM Association in 2010, the US well number is the new industry standard for identifying oil and gas wells.

Section 3170.30 Alternative Measurement Equipment and Procedures

This proposed new section would clarify the process that operators or manufacturers must follow to get BLM approval for using alternative oil or gas measurement equipment or measurement methods. The proposed language is substantially similar to language in existing § 3174.4(d) and § 3174.13, with the biggest change being that it would apply to both oil and gas equipment and methods. In addition the proposed rule would require approval of alternative measurement equipment and procedures to meet or exceed the objectives in minimum standards in part 3170. Alternative measurement equipment and procedures would need to meet or exceed measurement performance requirements, audit trail and verification requirements, and site security requirements. This proposed new section would replace existing § 3174.4(d) and § 3174.13. Since these proposed requirements would apply to both oil and gas operations, they belong in proposed subpart 3170, which contains provisions that are common to multiple part 3170 subparts.

The purpose of proposed § 3170.30 is to allow the BLM to approve new measurement equipment and procedures not already approved for use in the regulations. The proposed section would require an operator or manufacturer requesting approval to submit appropriate data demonstrating that the proposed alternative equipment or measurement method/procedure meets or exceeds the performance standards, would not affect royalty income, production accountability, or site security. The BLM is proposing that the PMT would review operators' or manufacturers' requests for approval of alternative equipment or measurement methods/procedures to ensure that the alternative equipment or measurement methods/procedures would meet or exceed the objectives of the applicable minimum standards of part 3170 and would not affect royalty income, production accountability, or site security. After reviewing the requests, the PMT would make recommendations to BLM management, including any suggested conditions of approval. After BLM approval, the PMT would post the make, model, range or software version (as applicable), or method/procedure on the BLM's website, making it available for use at all FMPs.

Proposed § 3170.30(c) would clarify that the procedures for requesting and granting a variance under § 3170.40 of this subpart may not be used as an avenue for approving new measurement technology, methods, or equipment.

Section 3170.40 Variances

Under this proposed rule, existing § 3170.6 would be renumbered to § 3170.40. Both § 3170.6 and § 3170.40 provide instructions on how an operator could electronically submit a request for a variance or, if electronic filing is not possible or practical, submit the request to a BLM field office. Proposed § 3170.40 would revise the existing language to match language in proposed § 3173.43(b) (existing § 3173.10(b)), which instructs operators on how to submit Sundry Notices. This change would create a uniform process for submitting variance requests, FMP number requests, site facility diagrams, and other requests for approval.

The BLM requests comment on whether it should also include a State and tribal variance provision that would allow States and tribes to request that the BLM apply analogous State or tribal rules or regulations in place of the BLM's requirements. The BLM is interested in achieving administrative efficiencies where possible while also protecting the public and tribal interests in production accountability and royalty revenues. The BLM specifically requests comment on the following: The appropriate standard for granting a State or tribal variance; the scope of a State or tribal variance; the appropriate process for obtaining a State or tribal variance; and, the means by which the BLM could address changes to State or tribal rules or regulations on which a variance is based. The BLM notes that its regulations in 43 CFR subpart 3179 previously contained a State and tribal variance provision at § 3179.401 (see 81 FR 83008 (Nov. 18, 2016)). Although that provision has since been rescinded (see 83 FR 49184 (Sept. 28, 2018)), the BLM requests comment on the extent to which former § 3179.401 could serve as a model for a new State and tribal variance provision.

Section 3170.50 Required Recordkeeping, Records Retention, and Records Submission

Proposed § 3170.50(g) would require operators to include the ''Land description'' on all records used to determine the quality, quantity, disposition, and verification of production from Federal or Indian leases, unit PAs, or CAs. Land description includes the quarter-quarter section, section, township, range and principal meridian, or other authorized survey designation acceptable to the AO, such as metes-and-bounds, or latitude and longitude. A land description is needed in case there are errors in other areas of a record. For example, when an operator mistakenly enters the wrong Federal agreement number, the BLM uses other information in the record to determine which Federal agreement is the correct one. The land description can be an important source of information to confirm or refute the validity of a record when the record contains missing or erroneous information. Proposed § 3170.50(g)(4) would also add ''Land description'' to the record-information requirement for facilities existing prior to the assignment of an FMP number. The need for the land description on records for facilities without an FMP number is the same for facilities with assigned FMP numbers.

2. Section-by-Section Discussion for Changes to Subpart 3173

This proposed rule would renumber all of the sections and rename one section in the existing subpart 3173 in order to improve consistency among the various part 3170 regulations. The following table provides a cross-walk comparison of proposed subpart 3173 to existing subpart 3173:

| Existing subpart 3173 sec. | Proposed subpart 3173 sec. |
|---|---|
| 3173.1 Definitions and acronyms | 3173.10 Definitions and acronyms. |
| 3173.2 Storage and sales facilities—seals | 3173.20 Storage and sales facilities—seals. |
| 3173.3 Oil measurement system components—seals | 3173.21 Oil measurement system components—seals. |
| 3173.4 Federal seals | 3173.22 Federal seals. |
| 3173.5 Removing production from tanks for sale and transportation by truck. | 3173.30 Removing production from tanks for sale and transportation by truck. |
| 3173.6 Water-draining operations | 3173.31 Water-draining operations. |
| 3173.7 Hot oiling, clean-up, and completion operations | 3173.32 Hot oiling, clean-up, and completion operations. |
| 3173.8 Report of theft or mishandling of production | 3173.40 Report of theft or mishandling of production. |
| 3173.9 Required recordkeeping for inventory and seal records | 3173.41 Required recordkeeping for inventory and seal records. |
| 3173.10 Form 3160–5, Sundry Notices and Reports on Wells | 3173.43 Data submission and notification requirements. |
| 3173.11 Site facility diagram | 3173.50 Site facility diagram. |
| 3173.12 Applying for a facility measurement point | 3173.60 Applying for a facility measurement point number. |
| 3173.13 Requirements for approved facility measurement points | 3173.61 Requirements for approved facility measurement point numbers. |
| 3173.14 Conditions for commingling and allocation approval (surface and downhole). | 3173.70 Conditions for commingling and allocation approval (surface and downhole). |
| 3173.15 Applying for a commingling and allocation approval | 3173.71 Applying for a commingling and allocation approval. |
| 3173.16 Existing commingling and allocation approvals | 3173.72 Existing commingling and allocation approvals. |
| 3173.17 Relationship of a commingling and allocation approval to royalty-free use of production. | 3173.73 Relationship of a commingling and allocation approval to royalty-free use of production. |
| 3173.18 Modification of a commingling and allocation approval | 3173.74 Modification of a commingling and allocation approval. |
| 3173.19 Effective date of a commingling and allocation approval | 3173.75 Effective date of a commingling and allocation approval. |
| 3173.20 Terminating a commingling and allocation approval | 3173.76 Terminating a commingling and allocation approval. |
| 3173.21 Combining production downhole in certain circumstances | 3173.80 Combining production downhole in certain circumstances. |
| 3173.22 Requirements for off-lease measurement | 3173.90 Requirements for off-lease measurement. |
| 3173.23 Applying for off-lease measurement | 3173.91 Applying for off-lease measurement. |
| 3173.24 Effective date of an off-lease measurement approval | 3173.92 Effective date of an off-lease measurement approval. |
| 3173.25 Existing approved off-lease measurement | 3173.93 Existing approved off-lease measurement. |
| 3173.26 Relationship of off-lease measurement approval to royalty-free use of production. | 3173.94 Relationship of off-lease measurement approval to royalty-free use of production. |
| 3173.27 Termination of off-lease measurement approval | 3173.95 Termination of off-lease measurement approval. |
| 3173.28 Instances not constituting off-lease measurement, for which no approval is required. | 3173.96 Instances not constituting off-lease measurement, for which no approval is required. |
| 3173.29 Immediate assessments for certain violations | 3173.190 Immediate assessments for certain violations. |

If a provision is not specifically discussed in this section-by-section analysis, then the provision is essentially the same as the existing regulation.

Section 3173.10 Definitions and Acronyms

This proposed section would clarify the definition of ''Appropriate valves'' by simplifying the language to say that such valves provide access to production (*i.e.,* access to add or remove liquids from a tank or piping system) before it is measured for sale. It would further clarify that such valves would be subject to the proposed rule's sealing requirements at proposed § 3170.20. This new definition would help BLM inspectors identify which valves are subject to the seal requirements and help operators comply with the regulation.

This proposed section would include a new definition for ''Completed.'' The term is used in proposed § 3173.80. The proposed changes in § 3173.80 are discussed later in this preamble.

The proposed rule would significantly change the definition for ''Economically marginal property.'' The existing regulation provides conditions under which a lease, unit PA, or CA may be defined as an economically marginal property. The existing regulation requires each lease, unit PA, or CA in a commingling application to meet one of the definitions of economically marginal property in order for the BLM to consider approving a request to commingle Federal or Indian production.

The existing regulation lists three economic conditions under which a property may be considered economically marginal. The first economic condition is when revenue from production is so low that a prudent operator would elect to plug a well or shut-in a lease rather than invest resources to achieve non-commingled production. The second economic condition is when the expected revenue, net any associated operating costs, generated from oil or gas production is insufficient to cover the nominal cost of the capital expenditure required to achieve measurement of non-commingled oil or gas production over a payout period of 18 months. The third economic condition occurs when the net present value, or the discounted value of the royalties collected from production for the Federal or Indian leases, unit PAs, or CAs over the expected life of the equipment required to achieve non-commingled production, is less than the capital expense of purchasing and installing this equipment.

This proposed rule would eliminate the first condition for an economically marginal property. Upon review, the BLM believes the first and third conditions in the existing rule are essentially the same. The BLM proposes to change the existing second and third economic conditions to state that the capital expense would be based on the least expensive, practicable, alternative equipment required to achieve non-commingled measurement of production. This change would clarify for industry and the BLM the equipment that would be included in an economic analysis for identifying an economically marginal property. The proposed rule would retain the last sentence of the existing definition with only minor administrative changes.

As discussed earlier in this preamble, the proposed rule would remove the definition of ''Land description'' from its current location in existing § 3173.1 and relocate it to proposed § 3170.10.

The proposed rule would move the revised definition for ''Permanent

measurement facility'' from § 3173.1 to § 3170.10. The revised definition for ''Permanent measurement facility'' is discussed previously.

The proposed rule would add a definition for the ''Propagation of uncertainty'' made necessary by the addition of a new condition for commingling in proposed § 3173.70(b)(5).

Section 3173.20 Storage and Sales Facilities—Seals

The proposed rule would clarify the requirement in § 3173.20(c)(2) that seals are not required on valves on water tanks, unless the valve could provide access to sales or storage tanks by water tank and oil tank by means of common piping. The BLM is proposing to add a diagram to Appendix A, subpart 3173, that would depict a common tank configuration and which valves in this configuration are appropriate valves, requiring seals, and which are not. The diagram is intended to address confusion over whether valves on water tanks that have the possibility of accessing oil are appropriate valves that must be sealed.

Section 3173.21 Oil Measurement System Components—Seals

This section addresses requirements for sealing components used in LACT meters and Coriolis measurement systems (CMS). This section identifies the components that must be effectively sealed, as defined in § 3173.10. The objective of this section is to eliminate the theft or mishandling that can occur when components that are used in determining the quantity or quality of oil are not properly sealed.

Upon reviewing existing § 3173.3, the BLM believes that some of the existing sealing requirements are excessive, while others are necessary, but are unclear and in need of revision. The proposed rule seeks to reduce the compliance burden on operators as well as the enforcement burden on the BLM. The BLM reviewed all oil measurement system components, eliminated seal requirements on those with minimal risk to site security, and revised the remaining requirements to provide clarity.

Proposed § 3173.21(a) would change the sealing requirements for the components on LACT meters and CMSs that are currently contained in existing § 3173.3(a)(1), (a)(4), (a)(5), (a)(6), (a)(7), (a)(8), (a)(9), (a)(10), (a)(12), and (a)(13).

Proposed § 3173.21would eliminate seal requirements for the following seals on LACT meters and CMSs:

§ 3173.3(a)(1) Sample probes;
§ 3173.3(a)(6) LACT meters or CMS;
§ 3173.3(a)(9) Manual-sampling valves (if so equipped)'
§ 3173.3(a)(10) Valves on diverter lines larger than 1 inch in nominal diameter;
§ 3173.3(a)(12) Totalizer; and
§ 3173.3(a)(13) Prover connections.

For each of these components, the BLM believes the burden of compliance outweighs the risk of the removal of unmeasured oil. The BLM requests comment on the assumptions made in the following proposals in this section.

Existing § 3173.3(a)(1), requiring a seal for sample probes on LACTs or CMSs, would be eliminated in proposed § 3173.21(a). Sample probe seal requirements would be removed because a sample probe is difficult to remove in normal operations. Since a sample probe is difficult to remove in normal operations, it poses a low risk to measurement if the current requirement for a seal is removed. If a sample probe were removed, its removal would cause a noticeable pressure drop. This pressure drop is likely to be noted on a flow computer, thereby alerting the operator or the BLM to a change in flow conditions in the measurement system.

Existing § 3173.3(a)(6), requiring a seal for LACT meters or CMS, would be eliminated in proposed § 3173.21(a). The existing regulation requires the sealing of LACT meters or CMS. Electronic meters cannot be opened and adjusted in the same way as a mechanical meter. New facilities with larger production volumes are generally using electronic meters for FMPs. Given the construction of electronic meters, it is impossible to seal components which affect the measurement of quality and quantity of oil because the components reside within the housing of the meter. Removal of the seal requirement for electronic meters on newer, higher-producing agreements poses low risk for improper measurement. Mechanical meters are more likely to be used on lower-production FMPs. The BLM believes the elimination of a seal requirement on these meters would not significantly affect production accountability, as higher-volume production facilities are safeguarded with the use of electronic meters.

Existing § 3173.3(a)(9), requiring a seal for manual sample valves, would be eliminated in proposed § 3173.21(a). The proposed rule would remove this requirement because most manual sample valves are less than 1-inch nominal size. Historically, the BLM has used the 1-inch nominal size to delineate the size beyond which the removal of product from a production facility without measurement becomes easier. For example, proposed § 3173.20(c)(4) designates a sample cock valve on piping or tanks of less than 1-inch nominal size as not an appropriate valve subject to sealing requirements. The proposed change provides consistency with the designation of what is not an appropriate valve in the proposed § 3173.20(c) and the proposed sealing requirements on oil measurement systems in proposed § 3173.21(a)(6). The BLM believes manual sample valves in a production facility are unlikely to provide easy access for the removal of oil that has not been measured for royalty purposes.

Existing § 3173.3(a)(10), requiring a seal for valves on divert lines larger than 1 inch in diameter, would be eliminated in proposed § 3173.21(a). Generally, production sent to a divert line does not meet sales quality specifications and would not be measured for production reporting for royalty purposes. Higher-volume facilities use electronic metering systems and operators may have the Programmable Logic Controller configured to show a load rejection in the event log. The event log record would allow BLM inspectors as well as operators, to account for diverted production and control loss risk on higher-volume properties. Removal of the requirement for a seal for valves on divert lines poses a low risk for theft and mishandling and continues to insure proper measurement of oil on which royalty is due.

Existing § 3173.3(a)(12), requiring a seal for the totalizer, would be eliminated in proposed § 3173.21(a). The BLM recognizes the sealing of an electronic meter totalizer is impractical. A seal on a mechanical meter counter head and mechanical meter head will be required in proposed § 3173.21(a)(3). The proposed rule eliminates the impractical requirement for electronic meters and includes the practical seal requirement on mechanical meters in proposed § 3173.21(a)(3). The removal of the requirement for a seal on a totalizer of an electronic meter has a low risk of theft or mishandling of production while still maintaining accurate measurement at the FMP.

Existing § 3173.3(a)(13), requiring a seal for proving connections, would be eliminated in proposed § 3173.3(a). The removal of the requirement to seal proving connections would restore the standard in Onshore Order No. 3, which had no seal requirement for proving connections. Mishandling or theft downstream of an FMP where these seals are located would not affect royalty revenues because royalties would be assessed on volumes measured at the FMP. After further consideration, the BLM has determined that the concern for sealing the proving

valves to prevent falsification of meter proving reports is unwarranted because a BLM inspector would easily detect a proving report that has only a changed date or looks exactly like previous proving reports. Therefore, the BLM would remove this requirement in the proposed rule.

Proposed § 3173.21(a)(3) would modify the meter-assembly sealing requirements now found in existing § 3173.3(a)(4). The existing regulation requires a meter assembly, including the counter head and meter head, to be sealed. The proposed new language would require operators to seal the mechanical counter head (totalizer) and meter head on a mechanical meter only. The existing regulation created confusion with respect to the sealing requirements on a non-mechanical or electronic meter. There is no practical way to seal these components on an electronic meter. This change would clarify that the sealing requirement applies to mechanical meters, and not to non-mechanical meters that are used for measurement.

Proposed § 3173.21(a)(4) would modify the seal requirement for a temperature averager, now found in existing § 3173.3(a)(5). The revised language would no longer refer to a seal requirement for a temperature averager, but instead to a seal requirement for a stand-alone temperature averager monitor. This proposed revision would eliminate any confusion over built-in temperature averagers, which are impossible to seal. The change in the proposed rule maintains the same level of risk for mismeasurement as the current rule and will continue to provide for accurate measurement.

Proposed § 3173.21(a)(5) would revise the sealing requirement for a back-pressure valve downstream of the meter, now found in existing § 3173.3(a)(7). The proposed new language would clarify that the seal requirement would apply only to fixed, non-automatic adjusting, back-pressure valves downstream of the meter. The result would be that operators could use automatic-adjusting back-pressure valves as intended, without having to modify the equipment in order to add seals to valves that adjust automatically based on operating conditions. A seal is used to maintain a fixed operating condition. Automatic-adjusting, back-pressure valves downstream of the meter vary with operating conditions. Sealing a piece of equipment designed to adjust to operating conditions does not make sense. This change is likely to improve measurement at locations with automatic-adjusting back-pressure valves downstream of the meter and maintain the same level of measurement accuracy at locations with fixed or non-automatic adjusting back-pressure valves downstream of the meter.

Proposed § 3173.21(a)(6) would clarify the sealing requirement for drain valves, now found in existing § 3173.3(a)(8). The new language would clarify that the requirement would apply to drain valves used on piping with a nominal pipe size of 1 inch or larger. The existing language applies to any drain valve in the system. This change would eliminate the need for operators to seal most drain valves on sample pots on LACT units. The BLM believes that the proposed requirement would adequately addresses security concerns regarding access to production without accountability and provide clarity for industry compliance and BLM inspection. The proposed change maintains a low risk for improper measurement, theft, or mishandling of production.

Section 3173.31 Water-Draining Operations

Existing § 3173.6 requires operators to document specific information when draining water from production storage tanks. The existing regulation requires the operator, purchaser, or transporter, as appropriate, to document information as specified in existing § 3173.6(a) through (h) when water is drained from a tank storing hydrocarbons.

This proposed rule would eliminate the specific requirements in § 3173.6(a) through (h) and instead defer to the seal-record requirements in proposed § 3173.41(b), which are currently in existing § 3173.9(b). In the current rule, the operator was not required to submit the required information to the BLM via Sundry Notice. Operators have only been required to maintain a record of the information. This proposed change in documentation during water-draining operations would not negate an operator's obligation to report produced water to ONRR on the Oil and Gas Operations Report (OGOR) Part A. The proposed change would, however, eliminate unnecessary burdens on operators by reducing the existing records requirements of Federal or Indian agreement number, land description of tank location, unique tank number and nominal capacity, date of the opening gauge, opening gauge, total observed volume and free water measurement, closing gauge and total observed volume to those maintained in a seal record. After review, the BLM believes the existing documentation requirements add minimal value to production accountability and is information available through internal records for water disposal. The proposed revision would require the operator, purchaser, or transporter, as appropriate, to maintain all seal records and make them available to the BLM upon request.

Section 3173.43 Data Submission and Notification Requirements

The proposed rule would make only minor changes to existing § 3173.10. In addition to renumbering the section, the proposed rule would change the section heading from ''Form 3160–5 Sundry Notices'' to ''Data submission and notification requirements.'' The proposed rule would also update regulatory cross references in paragraphs (a)(1) through (a)(7).

Section 3173.50 Site Facility Diagram

Proposed § 3173.50 would revise and renumber existing § 3173.11, which sets out the requirements for site facility diagrams.

Proposed § 3173.50(c)(3) would require operators to use the complete US well number on the site facility diagrams when identifying wells flowing into headers, instead of the API well number, as explained in the previous discussion on proposed § 3170.10. The complete US well number provides the most accurate unique well identification, including completion and sidetrack information. For BLM inspectors, the US well number provides a unique well identifier, critical for their production facility inspections when Federal or Indian wells are co-located with non-Federal or non-Indian wells. Created by the PPDM Association in 2010, the US well number is the new industry standard for identifying oil and gas wells.

Proposed § 3173.50(c)(4) would correct an editing error in existing § 3173.11(c)(4) regarding how an operator should depict a co-located facility on its site-facility diagram. The proposed change would require the operator of a co-located facility to identify the co-operator by name on the site facility diagram and identify with a box on the diagram the approximate location of the co-located facility. The BLM acknowledges that an operator of a Federal or Indian lease, unit PA, or CA is not responsible for another operator's co-located facility. However, a BLM inspector would need to understand the extent of the operator's responsibilities at a site with co-located facilities. The proposed change would reduce the burden on operators of Federal or trust minerals, acknowledge the limits of the operator's responsibility, and allow

BLM inspectors to conduct appropriate facility inspections.

Proposed § 3173.50(c)(6) would remove the requirement in existing § 3173.11(c)(6) for an operator of a co-located production facility to include on the site facility diagram a skeleton diagram of the other operator's co-located facility(ies). The proposed rule would maintain the existing requirement, in the second sentence of existing § 3173.11(c)(6), for one diagram in the case of storage facilities common to co-located facilities and operated by one operator. The proposed change would acknowledge the extent of an operator's responsibility on Federal or Indian leases, unit PAs, or CAs and reduce the burden and difficulty of creating diagrams for another operator's facilities. With the proposed change, BLM inspectors would continue to complete appropriate facility inspections effectively.

Proposed § 3173.50(c)(8) would give operators options, in addition to using the assigned FMP number, for identifying the measurement equipment used for royalty reporting on-site facility diagrams. The proposed change would also eliminate the requirement that operators wait to receive an FMP number before submitting amended or new diagrams. The proposed revision gives the operator greater flexibility when filling out the site facility diagram and allows for the timely submission of both new and amended diagrams where an FMP number has not yet been assigned. BLM inspectors would be able to conduct facility inspections whether the operator provides the BLM-assigned FMP number, the unique identifiers, or station identification (ID) numbers for the measurement equipment on its diagram.

Proposed § 3173.50(d)(1) would revise the timeframe in existing § 3173.11(d)(1) for when an operator would have to submit a new, permanent site-facility diagram. The time frame would be changed from 30 days after the BLM assigns an FMP to 60 days after the facility becomes operational. In addition, proposed § 3173.50(d)(2) would change the timeframe in existing § 3173.11(d)(2) for when an operator would have to submit an amended site facility diagram for a modified, existing facility. That time frame would be changed from 30 days to 60 days after the facility is modified. The proposed 60-day timeframe would also apply when a non-Federal facility located on a Federal lease or a federally approved unit or communitized area is constructed or modified. The BLM is proposing this change because many site-facility diagrams are not prepared ''in-house'' and the 30-day deadline is difficult for operators to meet. This proposed change would retain the new operator's responsibility to submit amended site facility diagrams when the facility is modified in any way. The BLM believes extending the timeframe for submission of site facility diagrams on new, permanent facilities and modified, existing facilities from 30 days to 60 days would not interfere with the BLM's responsibility for facility inspections.

Proposed § 3173.50 eliminates the requirement (in existing 3173.11(e)) to submit a site facility diagram for a location for which an FMP is not required. The BLM believes the existing requirement is covered by the requirement in proposed § 3173.50(a) and so the deletion of existing 3173.11(e)(1) and (e)(2) removes a regulatory redundancy. Under § 3173.50(a), operators would still be required to submit a site facility diagram for a location not requiring an FMP number.

Proposed § 3173.50(e) is a new section that would change the timeframe in existing § 3173.11(f) for when an operator must update and amend a diagram. The proposed rule would give operators 60 days, instead of the current 30 days, to update and amend a diagram after a facility is modified or a non-Federal facility located on a Federal lease or federally approved unit or communitized area is constructed or modified. The BLM supports this change because many site-facility diagrams are not prepared ''in-house'' and the 30-day deadline is difficult for operators to meet. The proposed change would also delete the requirement to submit a modified site-facility diagram when there is a change of operator and the only change to the diagram would be the new operator's name. The BLM estimates the operator burden to prepare a new site facility diagram to be 4 hours of operator staff time at $65.40 per hour for a total of $262.40 to prepare a new site facility diagram. The BLM believes the proposed changes will lessen the burden and cost on operators to comply with the regulations, while continuing to allow the BLM to ensure production accountability.

Section 3173.60 Applying for a Facility Measurement Point Number

Proposed § 3173.60 would revise the existing requirements for the FMP-number application process that are now located in existing § 3173.12.

The proposed rule would change the section title slightly from ''Applying for a facility measurement point'' to ''Applying for a facility measurement point number.'' This change would more accurately reflect the process of applying for and receiving an FMP number as opposed to applying for an FMP, which already exists as the point of royalty measurement even before the BLM issues an FMP number for it. The BLM proposes to delete existing §§ 3173.12(a)(1), (a)(2), and (b) because these sections essentially define FMP, off-lease measurement, and commingling. Proposed § 3170.10 already defines these terms. The proposed regulation would seek to make the distinction between an FMP—the point where oil or gas produced from a Federal or Indian lease, unit PA, or CA is measured, and where the measurement affects the calculation of the volume or quality of production on which royalty or injection and withdrawal fees are owed—and the FMP number. An FMP exists whether or not the BLM has assigned an FMP number. The proposed change would keep the definition of an FMP separate from the application for an FMP number and prevent confusion. In order to accommodate this change, the word ''number'' would be inserted after the word ''FMP'' throughout the revised section. Proposed § 3173.60(a) would add reference to gas storage agreement involving native gas or oil to the requirement of applying for an FMP number. This change would be necessary to address the changes proposed to the FMP definition.

Proposed §§ 3173.60(c)(1), (c)(2), and (c)(3) would change the tiers in existing § 3173.12(e) that dictate the timeframes under which operators of permanent existing facilities would be required to apply for FMP numbers. Each tier is grouped by monthly production amounts with assigned compliance dates that would fall either 1, 2, or 3 years after the effective date of the final rule. The tiers in existing §§ 3173.12(c)(1), (c)(2), and (c)(3) were derived from 2010 production data that was available when the existing regulations were written. The proposed rule seeks to replace the existing tiers with tiers derived from 2017 production data. The revised tiers better reflect the current operating environment by dividing the 2017 production data into equal thirds creating the new tiers. The proposed tier change would keep the application submissions by year split into thirds, reducing the burden on the BLM to process the influx of applications for existing locations when this section of the regulation goes into effect.

Proposed § 3173.60(c) would also delete the enforcement language in existing § 3173.12(e)(7). Subpart 3163

provides standalone authority for an Incident of Noncompliance (INC) and civil penalties for noncompliance with this part. In addition, proposed § 3170.70 provides further assurance the subpart 3163 enforcement mechanisms can be used to enforce the part 3170 requirements. Given the enforcement authority in other parts of the BLM's regulations, the BLM is proposing to delete this language without affecting the BLM's enforcement capacity.

Proposed § 3173.60(d) would list the information that the operator must include in its Sundry Notice requesting approval of an FMP number. These requirements are now found in existing § 3173.12(f). Existing § 3173.12(f)(2) requires the applicant to provide the applicable Measurement Type Code. The proposed rule would remove this requirement, since the Measurement Type Code will be generated automatically by the Automated Fluid Minerals Support System (AFMSS) 2 currently in development. In AFMSS 2, the FMP-number applicant will answer a series of questions on the FMP Sundry Notice. Based on the information submitted, AFMSS 2 will generate the FMP number. The first two digits of the FMP number will be the Measurement Type Code identifier. The BLM believes the AFMSS 2 application process negates the need for operators to provide the Measurement Type Code as required in existing § 3173.12(f)(2).

Proposed § 3173.60(d)(2)(i) through (iii) would revise the information that operators are now required to provide in their FMP applications about the equipment used for oil and gas measurement under existing § 3173.12(f)(3)(i) through (iii).

The BLM believes the proposed changes in § 3173.60(d)(2)(i), (ii), and (iii) would provide for consistent FMP-number-application-information requirements for gas measurement, oil measurement by tank gauge, and oil measurement by LACT or CMS. The proposed changes would also prevent operators from having to submit unnecessary information during the FMP number application process or information they are already required to provide elsewhere in the regulation.

Proposed § 3173.60(d)(2)(i) would change the information required under existing § 3173.12(f)(3)(i) on FMP number applications for gas measurement. The BLM is proposing to remove the requirement that operators list the ''station number, primary element (meter tube) size or serial number, and type of secondary device (mechanical or electronic)'' and replace it with a requirement that operators provide ''the unique meter ID, and elevation.'' The revised paragraph would still require gas-measurement FMP applicants to list the operator, purchaser, or transporter's name, as appropriate. This change would eliminate confusion as to what is required to identify the primary element, remove non-relevant information such as the type of secondary device, and include the elevation. The BLM believes the revised requirement would provide the information the BLM needs for production accountability and verification.

Under proposed § 3173.60(d)(2)(ii), the equipment information required under existing § 3173.12(f)(3)(ii) would remain the same for those applying for FMP numbers to measure oil by tank gauge. The only change would be that applicants would be required to specify the name of the operator, purchaser, or transporter, as appropriate. The additional information would make the new paragraph consistent with the information required for gas measurement and oil measurement by LACT or CMS in proposed § 3173.60(d)(2)(i) and (iii).

Proposed § 3173.60(d)(2)(iii) would change the information requirements under existing § 3173.12(f)(3)(iii) on FMP number applications for measuring oil by LACT or CMS. Purchasers, transporters, or parties other than the operator frequently operate the LACTs and CMS systems. The proposed change would require the operator to identify the purchaser or transporter, as appropriate, and the unique meter ID. The proposed change would also delete the requirement to identify whether the equipment is LACT or CMS, the associated oil tank number or serial number, and tank size. Much of the information required in existing § 3173.12(f)(3)(iii) is currently required on a site facility diagram. The proposed change would better serve the BLM with information connected to the associated record keeping requirements of the FMP, while reducing the burden on the operator.

Proposed § 3173.60(d)(3) would replace the reference to API number in existing § 3173.12(f)(4) with US well number. The proposed change would make the regulation consistent with the current industry standard for a unique well identifier.

Section 3173.61 Requirements for Approved Facility Measurement Points

Proposed § 3173.61 would revise the requirements in existing § 3173.13 that specify when operators must start using their FMP numbers on production reporting to ONRR and when they must notify the BLM of any permanent changes made to an FMP.

Proposed § 3173.61(a) would require all existing and new facilities to start using their FMP numbers when reporting production to ONRR starting with the third production month after the BLM assigns the FMP number(s). This would be a change from existing § 3173.13(a), which makes a distinction between existing facilities that are in operation 60 days on or before January 17, 2017, and new facilities that are in service 60 days after January 17, 2017. The existing rule requires existing facilities to begin using the FMP number for reporting production to ONRR on the OGOR starting with the fourth production month after the BLM assigns the number and new facilities to begin using the number starting with the first production month after the BLM assigns the number.

The proposed change would eliminate the burden on operators and the BLM to identify whether a facility is an existing or new facility based on the existing rule's publication date. The requirement for using an FMP number when reporting production to ONRR on OGORs would be tied only to the BLM's assignment of the FMP number. The BLM believes this change would eliminate confusion that has developed under the existing regulations due to delays with the development of AFMSS 2—the system that will be used to assign FMP numbers.

Proposed § 3173.61(b)(1) would not change from existing § 3173.13(b)(1). This paragraph would require operators to file a Sundry Notice within 30 days describing any permanent changes or modifications made to an FMP, including any changes to the information on an application submitted under proposed § 3173.60.

Proposed § 3173.61 would delete existing § 3173.13(b)(2) requiring the operator to include details, such as the primary element, secondary element, LACT/CMS meter, tank number(s), and wells or facilities when describing any changes or modifications made to an FMP under existing § 3173.13(b)(1). The BLM believes the existing requirement is redundant and adequately covered under proposed § 3173.61(b)(1), which states in part, ''These include any changes and modifications to the information listed on an application submitted under § 3173.60.'' The information required for applying for an FMP number would be sufficient to inform the BLM of an FMP modification. The existing regulation requires information in excess of that required on an initial FMP number application. The BLM believes the

deletion improves understanding of requirements and eliminates a redundancy.

Section 3173.70 Conditions for Commingling and Allocation Approval (Surface and Downhole)

Proposed § 3173.70 would revise the existing requirements for commingling and allocation approval that are now located in existing § 3173.14.

The BLM believes that commingling of production reduces the environmental footprint of oil and gas facilities and operators' capital expenditures. However, when considering an application for commingling of production, the BLM has an obligation to ensure the accuracy of measurement, the ability to verify reported production volumes, and the ability to audit reported production volumes going back 7 years on Federal minerals and 6 years on Indian trust minerals, as required by law. Based on in-house modeling using Monte Carlo simulation of produced volumes from multiple Federal interest percentages—as well as referencing a paper presented by Phillip Stockton, ''Cost Benefit Analyses in the Design of Allocation Systems,'' at the 27th International North Sea Flow Measurement Workshop in 2009 [2]—the BLM is concerned about uncertainty of measurement in commonly used test allocation methods. Many commingling applications the BLM receives present an allocation scheme based on well tests or a single Federal or Indian agreement test containing multiple wells. In a test allocation method, production from a well or agreement is directed to a test separator and tank for a test period varying from hours to days. Production measured during this test period is used to calculate the proportionate production attributable to the well or agreement from the total commingled production for a reporting month. Typical test allocation methods have a higher overall uncertainty of measurement than measurement performance goals for FMPs in proposed § 3174.31 and § 3175.31. From modeling, the BLM believes the uncertainty of measurement in allocation methods is more of a concern when the Federal or Indian mineral interests in the agreements proposed for commingling are dissimilar. As the disparity in Federal or Indian mineral interest in the agreements proposed for commingling increases, the overall uncertainty of measurement increases. The BLM would like to ensure there is no greater uncertainty in measurement in commingling and allocation methods than in non-commingled production. With the changes proposed in this section, the BLM would expand its ability to approve commingling of production while preserving measurement performance.

Proposed § 3173.70(a)(1)(i) and (a)(1)(iii) would rescind the requirement for the same revenue and royalty distribution that was initially required in IM 2013–152, Attachment 2–1 Royalty Distribution, and subsequently included in existing § 3173.14(a)(1)(i) and (a)(1)(iii). In practice, the BLM has discovered that it is difficult for BLM engineers to determine the revenue and royalty distribution based on the Federal lease type while reviewing applications for commingling. The BLM would be willing to forego this requirement given the difficulty in implementing it and the low risk that the BLM would approve commingling of Federal leases that have significantly diverse revenue and royalty distribution.

Proposed § 3173.70(a)(2) would remove the parenthetical requirement that an operator include an allocation method for produced water in its commingling application. The BLM's focus is on produced oil and gas on which there is a royalty obligation. If an approved commingling operation experiences an upset that results in significant oil in its water tanks, the operator would be required to account for the oil in the water tank based on the approved allocation method of oil production. The BLM believes the proposed change would eliminate an unnecessary requirement for commingling allocation approval and reduce the regulatory burden on operators and the BLM.

Proposed § 3173.70(a)(3) would change existing § 3173.14(a)(3) to allow a lease, unit PA, or CA to be included in a proposed Commingling and Allocation Approval (CAA) if it has an approved Application for Permit to Drill (APD), but no production at the time of the application. Under existing § 3173.14(a)(3), only leases, unit PAs, or CAs producing in paying quantities or, in the case of Federal leases, capable of producing in paying quantities, may be included in a proposed CAA. The proposed change would allow operators to apply for commingling approval before drilling wells, based on production volume projections, supported by offset-well decline curve data, presented in the commingling application in proposed § 3173.71(j). The BLM recognizes that operators base their drilling and production-facility economics on projected production volumes and regularly design new-well facilities based on offset-well information. The BLM believes the proposed change in requirements for commingling and allocation approval would allow operators to plan more efficiently while limiting the BLM's measurement accountability risk. In addition, proposed § 3173.76—which is discussed later in this preamble—includes new provisions for terminating CAAs based on projected oil or gas volumes or oil or gas quality if the actual production exceeds projections (*i.e.,* volumes are higher than projected).

Proposed § 3173.70(b)(2) would increase the existing average monthly production over the preceding 12 months for each Federal or Indian lease, unit PA, or CA proposed for the CAA from less than 1,000 Mcf of gas per month or 100 barrels (bbl) of oil per month to less than 6,000 Mcf of gas per month or 1,000 bbl of oil per month. The existing production volume thresholds were chosen because properties producing below these thresholds would almost always qualify as economically marginal properties as defined in § 3173.10 under the proposed rule and in conditions under which commingling may be approved in proposed § 3173.70(b).

The BLM calculated the existing 100 bbl per month oil threshold based on a cost to achieve non-commingled measurement of production of $50,000 for oil, estimating the cost of setting a single small tank. The production rate required to achieve an 18-month payout of this investment assuming a $60 per bbl oil price, including taxes, royalty payments, and fixed and variable operating costs would be approximately 100 bbl per month. Based on industry input and recent applications received for commingling approval, the BLM believes that the assumed capital expense estimate does not reflect current capital expenditures or construction costs to segregate production. With the advent of horizontal drilling and higher well production, industry claims the total construction cost to build a new facility is between $450,000 and $650,000 per well. The increase in the commingling oil threshold is based on a new estimate of $500,000 to achieve non-commingled measurement of oil production. The production rate required to achieve an 18-month payout of this capital investment, assuming $50 per bbl oil price including taxes, royalty payments, and fixed and variable operating costs

[2] Phillip Stockton, ''Cost Benefit Analyses in the Design of Allocation Systems,'' in *27th International North Sea Flow Measurement Workshop 2009: Tonsberg, Norway, 20–23 October 2009* (Red Hook, NY: Curran, 2010).

would be approximately 1,000 bbl per month of oil.

The BLM used a similar approach for determining the gas threshold of 1,000 Mcf per month in the existing rule. The production rate required to achieve an 18-month payout of this investment assuming a cost to achieve non-commingled gas production of $20,000, a $3 per MMBtu gas price, and including taxes, royalty payments, and operating expenses was approximately 1,000 Mcf per month. Assuming a capital expense of $200,000, the same relative increase as oil, to achieve non-commingled production, a gas price of $3 per MMBtu, and including taxes, royalty payments, and operating expenses, the proposed gas threshold would increase to 6,000 Mcf per month.

Proposed § 3173.70(b)(5) would add a new paragraph with a new condition for commingling and allocation approvals and renumber existing § 3713.14(b)(5) to § 3173.70(b)(6). Proposed § 3713.70(b)(5) would provide operators an opportunity to demonstrate to the BLM an allocation uncertainty based on a propagation of uncertainty method similar to that published in the Guide to the Expression of Uncertainty in Measurement, International Organisation for Standardisation, ISO/IEC Guide 98:1995. The overall allocation uncertainty analysis must: Meet the performance goals in proposed § 3174.31 and proposed § 3175.31; show no allocation bias as a result of commingling allocation; state what the assumed underlying distribution is of the volumes generated in the analysis and support the use of the stated underlying distribution assumption; and be limited to four leases, unit PAs, or CAs proposed for commingling. The BLM proposes to limit the number of leases, unit PAs, or CAs to four based on assumed limitations of spreadsheets typically used in most offices. The BLM is concerned with the inherent risk to the uncertainty of allocation measurement for Federal or Indian trust mineral percentages in a commingling and allocation approval. If the applicant is able to demonstrate no risk to Federal or Indian trust mineral measurement, then the BLM could agree to a commingling and allocation approval. The BLM seeks comments on this proposed new condition for commingling and allocation approval. Specifically, the BLM would request comment from the public on the following:

1. Would the applicant be able to perform the required analysis?

2. Would an applicant use this condition to apply for commingling and allocation approval?

3. Is there a better condition/method for ensuring no risk to measurement of Federal or Indian trust mineral interest and approving commingling and allocation?

Section 3173.71 Applying for a Commingling and Allocation Approval

Proposed § 3173.71 would revise existing requirements for commingling and allocation approval applications that are now located in existing § 3173.15.

Proposed § 3173.71(a) would remove from existing § 3173.15(a) the provision stating that, if the commingling and allocation proposal includes off-lease measurement, a separate Sundry Notice required under existing § 3173.23 is unnecessary as long as the information required under existing § 3173.23(b) through (e) and, where applicable, existing § 3173.23(f) through (i), is included in the request for approval for commingling and allocation. The proposed rule would require a separate Sundry Notice for off-lease measurement approval. The BLM would regard the commingling and allocation approval as a separate decision from the off-lease measurement approval. The BLM believes this would provide clarity for operators and the BLM on processing a commingling and allocation application. The BLM can foresee cases where a commingling and allocation application would be approved, but the off-lease measurement would be denied. The proposed new language would separate a decision on a CAA application from a decision on off-lease measurement. In addition, proposed § 3173.71(a) would require separate Sundry Notices for approval of commingling and allocation of oil or gas. The BLM would like to separate oil CAA applications from gas CAA applications since the economics for each are calculated differently based on the proposed definition of economically marginal property in § 3173.10.

Proposed § 3173.71(b) would change existing § 3173.15(b) to require an operator to submit an off-lease measurement Sundry Notice request under proposed § 3173.91 separately from and simultaneously with the Sundry Notice requesting commingling and allocation approval. The proposed rule would eliminate the ability to apply for off-lease measurement and commingling on the same Sundry Notice. The BLM believes this change would allow for a single decision on a single Sundry Notice. Since the requests for off-lease measurement and commingling and allocation approvals are related, but separate decisions, the operator would submit the Sundry Notices simultaneously.

Proposed § 3173.71(c) would delete the requirement in existing § 3173.15(c) to include the allocation of produced water in a commingling and allocation application. The BLM would eliminate this requirement for the same reasons stated in the earlier discussion of proposed § 3173.70(a)(2).

Proposed § 3173.71(f) would amend the requirement in existing § 3173.15(f) for a surface-use plan of operations if new surface disturbance is proposed for the FMP or associated facilities on BLM-managed land within the boundaries of the leases, units, and communitized areas from which production would be commingled. The proposed rule would require an applicant-certified statement of a surface-use plan of operations if new surface disturbance is proposed in a commingling application on BLM-managed land. By submitting a certified statement, the applicant is presenting a sworn statement that a surface-use plan of operations for the CAA has been prepared pursuant to regulation. If the BLM were to request the surface-use plan of operations, the applicant should be prepared to provide the plan. The proposed change would reduce the application submission and application review burdens while ensuring a surface-use plan of operation has been prepared.

Proposed § 3173.71(g) and § 3173.71(i) would remove the requirement that an operator submit a right-of-way grant with its application for commingling and allocation approval if any of its facilities would be located on Federal or Indian land. Proposed § 3173.15(g) would instead require an operator to provide an applicant-certified statement that it already has a right-of-way grant, approved under 43 CFR part 2880 or approved under 43 CFR part 2800, as applicable, for Federal rights-of-way. Existing § 3173.15(g) and § 3173.15(i) require an operator to submit the grant application as part of its CAA application. Proposed § 3173.71(i) would reduce the requirement to the operator providing an applicant-certified statement that it already has a right-of-way grant, approved under 25 CFR part 169 for rights-of-way over Indian lands. With the submission of a certified statement, the applicant is presenting a sworn statement that a right-of-way grant has been obtained pursuant to the appropriate regulation. Like the proposed change in § 3172.71(f), the change in part (g) would also reduce application submission and review burdens on both industry and the BLM.

Proposed § 3173.71(j) would change the documentation requirements under existing § 3173.15(j) to allow leases that

are not yet producing to be included in an application for a CAA. An operator would have to document that each lease, unit PA, or CA proposed for commingling has an approved APD and has offset-well decline curve data and offset well oil gravity and/or gas Btu content to support the projected production estimates contained in the CAA application. Under existing § 3173.15(j), only leases, unit PAs, or CAs producing in paying quantities or, in the case of Federal leases, capable of producing in paying quantities, may be included in a proposed CAA application. This proposed change under § 3173.71(j) would make it consistent with proposed changes in § 3173.70(a)(3), which would allow commingling and allocation agreements to include properties that are not yet producing. The BLM believes this change would make it easier for operators to apply for and receive commingling approvals.

Proposed § 3173.71(a) would change existing § 3173.15(a) to require that gas CAA applications must be submitted separately from oil CAA applications. Existing § 3173.15(k) requires operators to submit gas analyses, if the CAA request includes gas, and oil gravities, if the CAA request includes oil. The BLM would like to separate gas CAA applications from oil CAA applications, since the economics for each are calculated differently. The BLM's decision to approve a gas CAA is separate from its decision to approve an oil CAA. The proposed language would say that all gas analyses, including Btu content or oil gravities, as applicable, for previous periods of production from the leases, units, unit PAs, or communitized areas proposed for includes in the CAA, for up to 6 years before the date of the application for approval of the CAA. The proposed inclusion of ''as applicable'' is for consistency with the requirement in proposed § 3173.71(a) for separate CAA applications for oil and gas.

Section 3173.72 Existing Commingling and Allocation Approvals

Proposed § 3173.72 would make small changes to the BLM's process, now described in existing § 3173.16, for reviewing existing commingling and allocation approvals.

Proposed § 3173.72(a)(2)(i) would increase the threshold for grandfathered surface commingling from less than 1,000 Mcf of gas per month in existing § 3173.16(a)(2)(i) to less than 6,000 Mcf of gas per month, and from less than 100 bbl of oil per month in existing § 3173.16(a)(2)(ii) to less than 1,000 bbl of oil per month. In the existing rule, the thresholds in § 3173.14(b)(2) and § 3173.16(a)(2) are identical. The proposed regulation maintains identical thresholds for these sections. The increased production thresholds are discussed earlier.

Proposed § 3173.72(d) would add a new provision that would further clarify the grandfathering of existing downhole commingling. During the implementation of the existing regulation, confusion arose as to whether the grandfathering of an existing downhole commingling approval simultaneously granted new surface commingling approval or the grandfathering of an associated surface commingling approval. This new paragraph would further clarify what constitutes a grandfathered downhole commingling approval. The BLM believes the proposed change would clarify the extent of the grandfathering of downhole commingling approvals.

Section 3173.74 Modification of a Commingling and Allocation Approval

Proposed § 3173.74(b) would add another condition to existing § 3173.18 that would require an operator to have the CAA reevaluated by the BLM when actual production exceeds the projected production in the commingling application. The proposed rule would allow the BLM to rescind or revise the approval, or modify its conditions of approval, if the CAA's actual production volumes and quality from any of the leases, unit PAs, or CAs exceed the production projections provided in the CAA application. The inclusion of this provision to reevaluate a CAA based on projected production would provide the BLM with recourse if the operator fails to provide accurate projections in the application for commingling and allocation approval.

Section 3173.76 Terminating a Commingling and Allocation Approval

Proposed § 3173.76(a)(4) would add another reason for the BLM to terminate a commingling and allocation approval. If the CAA's production quantity and quality exceeds the operator's projections in the CAA application, the BLM would retain the authority to terminate the approval. The proposed change provides the BLM with recourse when an operator's actual production no longer supports the commingling approval previously granted.

Section 3173.80 Combining Production Downhole in Certain Circumstances

Proposed § 3173.80 would make a small change to the BLM's requirements for combining production downhole that are now located in existing § 3173.21.

Proposed § 3173.80(a)(1) would change the words in existing § 3173.21(a)(1) from ''drilled into'' to ''completed in.'' The BLM does not believe this change would be substantive and the change in terms would more accurately describe the downhole situation.

Section 3173.91 Applying for Off-Lease Measurement

Proposed § 3173.91 would clarify and simplify the requirements for an off-lease measurement application in existing § 3173.23.

Proposed § 3173.91(a) would add new language that would clarify that operators would be required to submit separate Sundry Notices for applications for off-lease measurement for each oil and gas FMP. Existing § 3173.23(a) requires operators to submit only one Sundry Notice for an off-lease measurement application. The BLM believes a decision for an off-lease measurement approval for a gas FMP is a separate decision from an off-lease measurement approval for an oil FMP. As such, these applications should be submitted on separate Sundry Notices.

Proposed § 3173.91(f) and (g) would require an operator applying for off-lease measurement to submit an applicant-certified statement that it already has a right-of-way grant for a Federal right-of-way under 43 CFR part 2880 or 43 CFR part 2800, as applicable, or a right-of-way grant over Indian land under 25 CFR part 169. Existing § 3173.23(f) and (g) require an operator to submit the grant application as part of its off-lease measurement application. The proposed change would make this section consistent with changes in proposed § 3173.71(g) and (i), which are the proposed application requirements for commingling and allocation approval. The BLM believes this change would reduce regulatory burdens on both applicants and the BLM. The BLM would retain the ability to request the operator provide supporting documentation of the right-of-way grant when needed.

Proposed § 3173.91 would delete existing § 3173.23(j), which requires an operator to submit a statement with its off-lease measurement application that indicates whether the proposal includes all, or only a portion of, the production from the lease, unit, or CA. The BLM believes existing § 3173.23(j) requirement is unnecessary when applications for off-lease measurement are submitted on an FMP basis. Production from all FMPs from any lease, unit PA, or CA are fully

accounted for on the OGORs. The removal of this requirement would reduce operator regulatory burden.

Section 3173.190 Immediate Assessments for Certain Violations

Table 1 to Proposed § 3173.29—Violations Subject to an Immediate Assessment

The proposed rule would change the wording in existing Immediate Assessment 1, which calls for a $1,000 assessment when ''an appropriate valve on an oil storage tank was not sealed, as required by § 3173.2.'' Proposed Immediate Assessment 1 in § 3173.190 would be changed to match the definition in proposed § 3173.10, which would require valves to be ''effectively'' sealed. This change would clarify that the immediate assessment would apply to valves that have a seal but the seal is not effective.

The proposed rule would remove the existing Immediate Assessment 2, which calls for a $1,000 assessment when ''an appropriate valve or component on an oil metering system was not sealed, as required by § 3173.3.'' This proposal is in response to the sheer numbers of seals that are regularly required for the effective sealing of some components of an oil metering system (LACT or CMS), where each missing or ineffective seal is a separate violation and immediate assessment. This would not affect the requirement to effectively seal an appropriate valve or component covered in proposed § 3173.10. Where an operator has systemic and re-occurring violations, the BLM may always take appropriate enforcement action.

3. Section-By-Section Discussion for Changes to Subpart 3174

The proposed rule would renumber all of the sections in existing subpart 3174. The goal of this renumbering is to achieve formatting consistency among the various part 3170 regulations. Each category (*e.g.,* tank storage and tank gauging measurement, LACT measurement, Electronic Liquids Measurement (ELM), CMS, and Proving) has been re-numbered to a series in blocks of 10. The following table provides a cross-walk comparison of proposed subpart 3174 section numbers and their headings with the current subpart 3174 section numbers and headings. New proposed sections are identified by the word ''New'' in the existing subpart 3174 column.

| Sec. existing subpart 3174 | Sec. proposed subpart 3174 |
|---|---|
| 3174.1 Definitions and acronyms | 3174.10 Definitions and acronyms. |
| 3174.2 General requirements | 3174.20 General requirements. |
| 3174.3 Incorporation by reference (IBR) | 3174.30 Incorporation by reference (IBR). |
| 3174.4 Specific performance requirements | 3174.31 Specific measurement performance requirements. |
| New | 3174.40 Approved measurement equipment and data requirements. |
| New | 3174.41 Measurement equipment requiring BLM approval. |
| New | 3174.42 Measurement equipment approved by regulation. |
| New | 3174.43 Data submission and notification requirements. |
| New | 3174.50 Grandfathering. |
| 3174.2 General requirements | 3174.60 Timeframes for compliance. |
| 3174.2 General requirements | 3174.70 Measurement location. |
| 3174.5 Oil measurement by tank gauging—general requirements | 3174.80 Oil storage tank equipment. |
| 3174.5 Oil measurement by tank gauging—general requirements | 3174.81 Oil measurement by tank gauging. |
| 3174.5 Oil measurement by tank gauging—general requirements | 3174.82 Oil tank calibration. |
| 3174.6 Oil measurement by tank gauging—procedures | 3174.83 Tank gauging procedures. |
| 3174.6 Oil measurement by tank gauging—procedures | 3174.84 Tank oil sampling. |
| 3174.6 Oil measurement by tank gauging—procedures | 3174.85 Determining S&W content. |
| 3174.6 Oil measurement by tank gauging—procedures | 3174.86 Tank oil temperature determination. |
| 3174.6 Oil measurement by tank gauging—procedures | 3174.87 Observed oil gravity determination. |
| 3174.6 Oil measurement by tank gauging—procedures | 3174.88 Measuring tank fluid level |
| 3174.7 LACT systems—general requirements | 3174.90 LACT systems—general requirements. |
| 3174.8 LACT systems—components and operating requirements | 3174.100 LACT systems—components and operating requirements. |
| New | 3174.101 Charging pump and motor. |
| 3174.8 LACT systems—components and operating requirements | 3174.102 Sampling and mixing system. |
| New | 3174.103 Air Eliminator. |
| 3174.8 LACT systems—components and operating requirements | 3174.104 LACT meter. |
| 3174.8 LACT systems—components and operating requirements | 3174.105 Electronic temperature averaging device. |
| 3174.8 LACT systems—components and operating requirements | 3174.106 Pressure-indicating device. |
| New | 3174.107 Meter Proving Connections. |
| 3174.8 LACT systems—components and operating requirements | 3174.108 Back Pressure and Check Valves. |
| 3174.10 Coriolis meter for LACT and CMS measurement applications—operating requirements. | 3174.110 Coriolis meter operating requirements. |
| 3174.10 Coriolis meter for LACT and CMS measurement applications—operating requirements. | 3174.120 Electronic liquids measurement, ELM (secondary and tertiary device). |
| New | 3174.121 Measurement data system, MDS. |
| 3174.9 Coriolis measurement systems (CMS)—general requirements and components. | 3174.130 Coriolis measurement systems (CMS) — general requirements and components. |
| New | 3174.140 Temporary measurement. |
| 3174.11 Meter-proving requirements | 3174.150 Meter-proving requirements. |
| 3174.11 Meter-proving requirements | 3174.151 Meter prover. |
| 3174.11 Meter-proving requirements | 3174.152 Meter proving runs. |
| 3174.11 Meter-proving requirements | 3174.153 Minimum proving frequency. |
| 3174.11 Meter-proving requirements | 3174.154 Excessive meter factor deviation. |
| 3174.11 Meter-proving requirements | 3174.155 Verification of the temperature transducer. |
| 3174.11 Meter-proving requirements | 3174.156 Verification of the pressure transducer (if applicable). |
| 3174.11 Meter-proving requirements | 3174.157 Density verification (if applicable). |
| 3174.11 Meter-proving requirements | 3174.158 Meter proving reporting requirements. |
| 3174.12 Measurement tickets | 3174.160 Measurement tickets. |
| 3174.12 Measurement tickets | 3174.161 Tank gauging measurement ticket. |

| Sec. existing subpart 3174 | Sec. proposed subpart 3174 |
|---|---|
| 3174.12 Measurement tickets | 3174.162 LACT system and CMS measurement ticket or volume statement. |
| 3174.13 Oil measurement by other methods | 3174.170 Oil measurement by other methods. |
| 3174.14 Determination of oil volumes by methods other than measurement. | 3174.180 Determination of oil volumes by methods other than measurement. |
| 3174.15 Immediate assessments | 3174.190 Immediate assessments. |

Another goal of this proposed numbering is to reduce the levels of section paragraphs and make it easier to locate and cite to specific requirements. For example, the existing subpart 3174 section that covers tank gauging is § 3174.6. Within this section, under paragraph (b), there are four levels of subparagraphs, which makes discerning the individual requirements of that section unnecessarily complex. The specific provisions that cover the procedure for determining the opening-tank fluid level are currently found at § 3174.6(b)(5)(i)(A) through (E). Under the proposed rule, the regulatory citation for determining the tank fluid level would be § 3174.88(a)(1) through (3). The BLM believes this change would benefit both industry and the BLM by making regulatory requirements more clear.

The following discussion provides a section-by-section explanation of the proposed changes to subpart 3174. If a provision is not specifically discussed in this section-by-section analysis, then the provision is essentially the same as the existing regulation

Section 3174.10 Definitions and Acronyms

This section lists definitions and acronyms that are used in this subpart.

This proposed rule would relocate the definitions for ''Configuration log'' and ''Event log'' in current § 3174.1 to the definitions section for subpart 3170 (§ 3170.10), which defines terms that are used in more than one of the part 3170 subparts.

The definition for ''Base pressure'' in current § 3174.1 would be modified to include the value of gauge pressure at base conditions. This change comes from requests by operators to include gauge pressure in the definition because they utilize gauge pressure units in their data systems, rather than absolute pressure units. By including the addition of the value of gauge pressure at base condition any confusion of whether use of gauge pressure units is acceptable would be removed.

A definition for ''Electronic liquid measurement'' would be added to support a new section that would address emerging hardware and software technologies that are associated with liquids measurement.

Definitions for three new proposed oil FMP categories would be added: ''Very-high-volume FMP,'' ''High-volume FMP,'' and ''Low-volume FMP.'' These definitions are needed to accommodate a new phase-in schedule for the subpart 3174 requirements, a third uncertainty level category for oil measurement, new grandfathering provisions, and specific exemptions from certain requirements. The proposed FMP category volume thresholds are tied primarily to the risk to royalty, based on uncertainty levels and anticipated costs to retrofit the FMPs to achieve these minimum uncertainty levels. The BLM requests comment on the proposed oil FMP categories and their associated measurement performance standards and requirement for BLM-approved equipment.

The proposed rule defines ''Low-volume FMP'' as any FMP that measures 50 bbl. oil/day or less over the averaging period. Low-volume FMPs would have to meet minimum requirement to ensure that measurements are verifiable under proposed § 3174.31(c), but would be exempt from the minimum uncertainty requirements found in proposed § 3174.31(a) and the requirement to achieve measurement without statistically significant bias in proposed § 3174.31(b). Under § 3174.50, low-volume FMPs in service before the effective date of the final rule would be exempt from the BLM-approved equipment requirements of proposed § 3174.41(a) through (i) until the listed equipment is replaced, or production levels at the FMP elevate it to the very-high-volume category. It is anticipated that low-volume FMPs would primarily consist of operations that employ manual tank-gauge measurement and would encompass an estimated 81 percent of the total FMPs, representing about 7 percent of reported production in calendar year 2017. For this category, all equipment and measuring procedures used to measure the volume and quality of oil for royalty purposes would have to comply with the requirements of subpart 3174 within 2 years of the effective date of the final rule.

The proposed rule defines ''High-volume FMP'' as any FMP that measures more than 50 bbl/oil per day, but less than 500 bbl oil/day over the averaging period. Proposed requirements for high-volume FMPs would ensure that measurements have no statistically significant bias, would be verifiable under proposed § 3174.31(b) and (c), and would achieve an overall measurement uncertainty of ±1.50 percent under proposed § 3174.31(a). The BLM believes the production volume threshold would make it economically feasible for operators to retrofit their FMPs to meet the overall uncertainty requirements. It is anticipated that this category would primarily consist of operations that employ manual tank-gauge measurement, automatic tank gauge (ATG), and LACT measurement, and would encompass an estimated 15 percent of the total FMPs, representing approximately 28 percent of reported production in calendar year 2017. Under § 3174.50, high-volume FMPs in service before the effective date of the final rule would be exempt from the BLM-approved equipment requirements of proposed § 3174.41(a) through (i) until the equipment listed in § 3174.41(a) through (i) is replaced, or the production levels at the FMP elevate it to the very-high-volume category. The new equipment would then be required to be BLM-approved equipment. For high-volume FMPs, all equipment and measuring procedures used to measure the volume and quality of oil for royalty purposes would have to comply with the requirements of subpart 3174 within 2 years of the effective date of the final rule.

The proposed rule defines ''Very-high-volume FMP'' as any FMP that measures 500 bbl oil or more over the averaging period. Proposed requirements for high-volume FMPs would ensure that measurements have no statistically significant bias, are verifiable under proposed § 3174.31(b) and (c), and would achieve an overall measurement uncertainty of ±0.50 percent under proposed § 3174.31(a). The BLM believes the production volume threshold would make it economically feasible for operators to retrofit FMPs to meet the overall

uncertainty requirements. It is anticipated this category would primarily consist of operations that employ LACT and CMS measurement and would encompass an estimated 3.8 percent of the total FMPs. This category would have the strictest measurement requirements of the three proposed FMP categories. For this category, all equipment and measuring procedures used to measure the volume and quality of oil for royalty purposes would have to comply with the requirements of subpart 3174 within 1 year of the effective date of the final rule.

A definition for ''Measurement period'' would be added to provide clear guidance when filling out measurement tickets, volume statements, and quantity transaction records.

The proposed rule would remove the definition for ''Outage gauging'' as the proposed rule would not contain a reference to ''outage gauging.'' The reason for removing the outage gauging option is discussed in the tank-gauge section later in this preamble.

The existing definition for ''Quantity transaction record (QTR)'' would be modified to include flow computers on LACTs, as well as on CMS, and would include any other systems approved by the BLM. The existing rule only addresses a QTR generated by a CMS, which has resulted in some confusion among operators, not knowing if this definition covered reports generated by LACTs and other BLM-approved equipment as well. This proposed change is intended to remove any confusion over QTR requirements.

The existing § 3174.1 definition for ''Tertiary device'' would be removed as it would be covered by the new definition of ''Electronic liquids measurement.''

The existing ''Vapor tight'' definition stated that vapor tight meant capable of holding pressure differential only slightly higher than that of installed pressure-relieving and vapor recovery devices. There has been confusion within industry that the definition meant if a pressure relieving device relieved pressure at its pre-set pressure on the tank then the vapor tight condition had been compromised. The existing definition for ''vapor tight'' would be modified to clarify the intent to retain the vapor tight condition to the settings of installed pressure-relieving or vapor-recovery devices. This proposed change is intended to remove any confusion over the meaning of vapor tight.

Section 3174.20 General Requirements

Currently located in existing § 3174.2, this section would list the general requirements that do not fit in any of the other more specific sections of the proposed rule. The proposed changes for this section are primarily administrative, such as updating cross references to reflect the new numbering of this proposed rule and removing the phase-in and commingling language, which would be revised and moved to a new § 3174.60, and a new § 3174.70.

Section 3174.30 Incorporation by Reference (IBR)

Building on existing § 3174.3, this proposed section lists 34 industry standards and recommendations that are proposed for incorporation by reference, either in whole or in part.

- API Manual of Petroleum Measurement Standards (MPMS) Chapter 2—Tank Calibration, Section 2A, Measurement and Calibration of Upright Cylindrical Tanks by the Manual Tank Strapping Method; First Edition, February 1995; Reaffirmed February 2012; Reaffirmed August 2017 (''API 2.2A''). This standard describes the procedures for calibrating upright cylindrical tanks used for storing oil. There are no substantive changes to this standard; we are proposing to add approval for the new reaffirmation date of this standard.
- API MPMS Chapter 2—Tank Calibration, Section 2B, Calibration of Upright Cylindrical Tanks Using the Optical Reference Line Method; First Edition, March 1989; Reaffirmed January 2013 (''API 2.2B''). This standard describes measurement and calibration procedures for determining the diameters of upright welded cylindrical tanks, or vertical cylindrical tanks with a smooth surface and either floating or fixed roofs. This standard was previously approved for IBR and is unchanged.
- API MPMS Chapter 2—Tank Calibration, Section 2C, Calibration of Upright Cylindrical Tanks Using the Optical-triangulation Method; First Edition, January 2002; Reaffirmed April 2013 (''API 2.2C''). This standard describes a calibration procedure for applications to tanks above 26 feet in diameter with cylindrical courses that are substantially vertical. There are no substantive changes to this standard; we are proposing to add approval for the new reaffirmation date of this standard.
- API MPMS Chapter 3.1A, Standard Practice for the Manual Gauging of Petroleum and Petroleum Products; Third Edition, August 2013; Reaffirmed December 2018 (''API 3.1A''). This standard describes the following: (a) The procedures for manually gauging the liquid level of petroleum and petroleum products in non-pressure fixed roof tanks; (b) Procedures for manually gauging the level of free water that may be found with the petroleum or petroleum products; (c) Methods used to verify the length of gauge tapes under field conditions and the influence of bob weights and temperature on the gauge tape length; and (d) Influences that may affect the position of gauging reference point (either the datum plate or the reference gauge point). There are no substantive changes to this standard; we are proposing to add approval for the new reaffirmation date of this standard.
- API MPMS Chapter 3—Tank Gauging, Section 1B—Standard Practice for Level Measurement of Liquid Hydrocarbons in Stationary Tanks by Automatic Tank Gauging; Third Edition, April 2018 (''API 3.1B''). This standard describes the level measurement of liquid hydrocarbons in stationary, above ground, atmospheric storage tanks using ATGs. This standard discusses automatic tank gauging in general, accuracy, installation, commissioning, calibration, and verification of ATG that measure either innage or ullage. There are no substantive changes to this standard; we are proposing to add approval for the new edition number of this standard.
- API MPMS Chapter 3—Tank Gauging, Section 6, Measurement of Liquid Hydrocarbons by Hybrid Tank Measurement Systems; First Edition, February 2001; Errata September 2005; Reaffirmed January 2017 (''API 3.6''). This standard describes the selection, installation, commissioning, calibration, and verification of Hybrid Tank Measurement Systems. This standard also provides a method of uncertainty analysis to enable users to select the correct components and configurations to address for the intended application. There are no substantive changes to this standard; we are proposing to add approval for the new reaffirmation date of this standard.
- API MPMS Chapter 4—Proving Systems, Section 1, Introduction; Third Edition, February 2005; Reaffirmed June 2014 (''API 4.1''). Section 1 is a general introduction to the subject of proving meters. This standard was previously approved for IBR and is unchanged.
- API MPMS Chapter 4—Proving Systems, Section 2—Displacement Provers; Third Edition, September 2003; Reaffirmed March 2011; Addendum February 2015 (''API 4.2''). This standard outlines the essential elements of meter provers that do, and also do not, accumulate a minimum of 10,000

whole meter pulses between detector switches, and provides design and installation details for the types of displacement provers that are currently in use. The provers discussed in this chapter are designed for proving measurement devices under dynamic operating conditions with single-phase liquid hydrocarbons. This standard was previously approved for IBR and is unchanged.

• API MPMS Chapter 4.5, Master-Meter Provers; Fourth Edition, June 2016 (''API 4.5''). This standard covers the use of displacement and Coriolis meters as master meters. The requirements in this standard are for single-phase liquid hydrocarbons. This standard was previously approved for IBR and is unchanged.

• API MPMS Chapter 4—Proving Systems, Section 6, Pulse Interpolation; Second Edition, May 1999; Errata April 2007; Reaffirmed October 2013 (''API 4.6''). This standard describes how the double-chronometry method of pulse interpolation, including system operating requirements and equipment testing, is applied to meter proving. This standard was previously approved for IBR and is unchanged.

• API MPMS Chapter 4.8, Operation of Proving Systems; Second Edition September 2013 (''API 4.8''). This standard provides information for operating meter provers on single-phase liquid hydrocarbons. This standard was previously approved for IBR and is unchanged.

• API MPMS Chapter 4—Proving Systems, Section 9—Methods of Calibration for Displacement and Volumetric Tank Provers, Part 2—Determination of the Volume of Displacement and Tank Provers by the Waterdraw Method of Calibration; First Edition, December, 2005; Reaffirmed July 2015 (''API 4.9.2''). This standard covers all of the procedures required to determine the field data necessary to calculate a Base Prover Volume of Displacement Provers by the Waterdraw Method of Calibration. This standard was previously approved for IBR and is unchanged.

• API MPMS Chapter 5—Metering, Section 6—Measurement of Liquid Hydrocarbons by Coriolis Meters; First Edition, October 2002; Reaffirmed November 2013 (''API 5.6''). This standard is applicable to custody-transfer applications for liquid hydrocarbons. Topics covered are API standards used in the operation of Coriolis meters, proving and verification using volume-based methods, installation, operation, and maintenance. This standard was previously approved for IBR and is unchanged.

• API MPMS Chapter 7.1, Temperature Determination—Liquid-in-Glass Thermometers; Second Edition, August 2017 (''API 7.1''). This standard describes how to correctly use various types of liquid-in-glass thermometers to accurately determine the temperatures of hydrocarbon liquids. This standard is proposed for incorporation for its standards covering the use of liquid-in-glass thermometers for temperature determination in tank-gauging operations.

• API MPMS Chapter 7—Temperature Determination, Section 2—Portable Electronic Thermometers; Third Edition, May 2018 (''API 7.2''). This standard describes the methods, equipment, and procedures for manually determining the temperature of liquid petroleum and petroleum products by use of a portable electronic thermometer. This standard is proposed for incorporation for its standards covering the use of portable electronic thermometers for temperature determination in tank gauging operations.

• API MPMS Chapter 7—Temperature Determination, Section 4—Dynamic Temperature Measurement; Second Edition, January 2018 (''API 7.4''). This standard describes methods, equipment, installation, and operating procedures for the proper determination of the temperature of hydrocarbon liquids under dynamic conditions in custody transfer applications. This standard is proposed for incorporation for its standards covering the use of dynamic temperature determination in LACT and CMS operations.

• API MPMS Chapter 8.1, Standard Practice for Manual Sampling of Petroleum and Petroleum Products; Fourth Edition, October 2013, (''API 8.1''). This standard covers procedures and equipment for manually obtaining samples of liquid petroleum and petroleum products from the sample point into the primary containers. This standard was previously approved for IBR and is unchanged.

• API MPMS Chapter 8.2, Standard Practice for Automatic Sampling of Petroleum and Petroleum Products; Fourth Edition, November 2016 (''API 8.2''). This standard describes general procedures and equipment for automatically obtaining samples of liquid petroleum, petroleum products, and crude oils from a sample point into a primary container. There are no substantive changes to this standard; we are proposing to add approval for the new edition number of this standard.

• API MPMS Chapter 8—Sampling, Section 3—Standard Practice for Mixing and Handling of Liquid Samples of Petroleum and Petroleum Products; First Edition, October 1995; Errata March 1996; Reaffirmed, March 2010 (''API 8.3''). This standard covers the handling, mixing, and conditioning procedures required to ensure that a particular representative sample of the liquid petroleum or petroleum product is delivered from the primary sample container/receiver into the analytical test apparatus or into intermediate containers. This standard was previously approved for IBR and is unchanged.

• API MPMS Chapter 9.1, Standard Test Method for Density, Relative Density, or API Gravity of Crude Petroleum and Liquid Petroleum Products by Hydrometer Method; Third Edition, December 2012; Reaffirmed, May 2017 (''API 9.1''). This standard covers the determination, using a glass hydrometer in conjunction with a series of calculations, of the density, relative density, or API gravity of crude petroleum, petroleum products, or mixtures of petroleum and nonpetroleum products normally handled as liquids and having a Reid vapor pressure of 101.325 Kilopascal (kPa) (14.696 psi) or less. There are no substantive changes to this standard; we are proposing to add approval for the new reaffirmation date of this standard.

• API MPMS Chapter 9.2, Standard Test Method for Density or Relative Density of Light Hydrocarbons by Pressure Hydrometer; Third Edition, December 2012; Reaffirmed, May 2017 (''API 9.2''). This standard covers the determination of the density or relative density of light hydrocarbons including liquefied petroleum gases having a Reid vapor pressure exceeding 101.325 kPa (14.696 psi). There are no substantive changes to this standard; we are proposing to add approval for the new reaffirmation date of this standard.

• API MPMS Chapter 9.3, Standard Test Method for Density, Relative Density, and API Gravity of Crude Petroleum and Liquid Petroleum Products by Thermohydrometer Method; Third Edition, December 2012; Reaffirmed, May 2017 (''API 9.3''). This standard covers the determination, using a glass thermohydrometer in conjunction with a series of calculations, of the density, relative density, or API gravity of crude petroleum, petroleum products, or mixtures of petroleum and nonpetroleum products normally handled as liquids and having a Reid vapor pressure of 101.325 kPa (14.696 psi) or less. There are no substantive

changes to this standard; we are proposing to add approval for the new reaffirmation date of this standard.

• API MPMS Chapter 10.4, Determination of Water and/or Sediment in Crude Oil by the Centrifuge Method (Field Procedure); Fourth Edition, October 2013; Errata, March 2015 (''API 10.4''). This standard describes the field centrifuge method for determining both water and sediment, or sediment only, in crude oil. This standard was previously approved for IBR and is unchanged.

• API MPMS Chapter 11—Physical Properties Data, Section 1—Temperature and Pressure Volume Correction Factors for Generalized Crude Oils, Refined Products and Lubricating Oils; May 2004; Addendum 1, September 2007; Reaffirmed, August 2012 (''API 11.1''). This standard provides the algorithm and implementation procedure for the correction of temperature and pressure effects on density and volume of liquid hydrocarbons that fall within the categories of crude oil. This standard was previously approved for IBR and is unchanged.

• API MPMS Chapter 12.1.1—Calculation of Static Petroleum Quantities—Upright Cylindrical Tanks and Marine Vessels; Fourth Edition, February 2019 (API 12.1.1). This standard guides users through the necessary steps to calculate static liquid quantities at atmospheric conditions in upright, cylindrical tanks, and marine tank vessels. This standard is proposed for incorporation for its standards covering the calculation of net standard volume for tank gauging operations.

• API MPMS Chapter 12—Calculation of Petroleum Quantities, Section 2—Calculation of Petroleum Quantities Using Dynamic Measurement Methods and Volumetric Correction Factors, Part 2—Measurement Tickets; Third Edition, June 2003; Reaffirmed February 2016 (''API 12.2.2''). This standard provides standardized calculation methods for the quantification of liquids and specifies the equations for computing correction factors, rules for rounding, calculation sequences, and discrimination levels to be employed in the calculations. There are no substantive changes to this standard; we are proposing to add approval for the new reaffirmation date of this standard.

• API MPMS Chapter 12—Calculation of Petroleum Quantities, Section 2—Calculation of Petroleum Quantities Using Dynamic Measurement Methods and Volumetric Correction Factors, Part 3—Proving Report; First Edition, October 1998; Reaffirmed May 2014 (''API 12.2.3''). This standard provides standardized calculation methods for the determination of meter factors under defined conditions. The criteria contained here will allow different entities using various computer languages on different computer hardware (or by manual calculations) to arrive at identical results using the same standardized input data. This document also specifies the equations for computing correction factors, including the calculation sequence, discrimination levels, and rules for rounding to be employed in the calculations. There are no substantive changes to this standard; we are proposing to add approval for the new reaffirmation date of this standard.

• API MPMS Chapter 12—Calculation of Petroleum Quantities, Section 2—Calculation of Petroleum Quantities Using Dynamic Measurement Methods and Volumetric Correction Factors, Part 4—Calculation of Base Prover Volumes by the Waterdraw Method; First Edition, December, 1997; Errata July 2009; Reaffirmed September 2014 (''API 12.2.4''). This standard provides standardized calculation methods for the quantification of liquids and the determination of base prover volumes under defined conditions. The criteria contained in this document allow different individuals, using various computer languages on different computer hardware (or manual calculations), to arrive at identical results using the same standardized input data. This standard specifies the equations for computing correction factors, rules for rounding, the sequence of the calculations, and the discrimination levels of all numbers to be used in these calculations. There are no substantive changes to this standard; we are proposing to add approval for the new reaffirmation date of this standard.

• API MPMS Chapter 13.3, Measurement Uncertainty; Second Edition, December 2017 (''API 13.3''). This standard establishes a methodology for developing an uncertainty analysis. There are no substantive changes to this standard; we are proposing to add approval for the new edition number of this standard.

• API MPMS Chapter 14, Section 3, Orifice Metering of Natural Gas and Other Related Hydrocarbon Fluids—Concentric, Square-edged Orifice Meters, Part 1, General Equations and Uncertainty Guidelines; Fourth Edition, September 2012; Errata July 2013; Reaffirmed, September 2017 (''API 14.3.1''). This standard provides reference for engineering equations and uncertainty estimations. There are no substantive changes to this standard; we are proposing to add approval for the new reaffirmation date of this standard.

• API MPMS Chapter 18—Custody Transfer, Section 1—Measurement Procedures for Crude Oil Gathered From Lease Tanks by Truck; Third Edition, May 2018 (''API 18.1''). This standard describes the procedures, organized into a recommended sequence of steps, for manually determining the quantity and quality of crude oil being transferred under field conditions. There are no substantive changes to this standard; we are proposing to add approval for the new edition number of this standard.

• API MPMS Chapter 21—Flow Measurement Using Electronic Metering Systems, Section 2—Electronic Liquid Volume Measurement Using Positive Displacement and Turbine Meters; First Edition, June 1998; Reaffirmed October 2016 (''API 21.2''). This standard provides for the effective utilization of electronic liquid measurement systems for custody-transfer measurement of liquid hydrocarbons. There are no substantive changes to this standard; we are proposing to add approval for the new reaffirmation date of this standard.

• API Recommended Practice (RP) 12R1, Setting, Maintenance, Inspection, Operation and Repair of Tanks in Production Service; Fifth Edition, August 1997; Reaffirmed April 2008; Addendum 1, December 2017 (''API RP 12R1''). This recommended practice is a guide on new tank installations and maintenance of existing tanks. Specific provisions of this recommended practice are identified as requirements in this final rule. There are no substantive changes to this standard; we are proposing to add approval for the new Addendum 1 to this standard.

• API RP 2556, Correction Gauge Tables for Incrustation; Second Edition, August 1993; Reaffirmed November 2013 (''API RP 2556''). This recommended practice provides for correcting gauge tables for incrustation applied to tank capacity tables. The tables given in this recommended practice show the percent of error of measurement caused by varying thicknesses of uniform incrustation in tanks of various sizes. This standard was previously approved for IBR and is unchanged.

The BLM is proposing to remove six industry standards that are currently incorporated by reference in existing § 3174.3.

• API MPMS Chapter 6—Metering Assemblies, Section 1, Lease Automatic Custody Transfer (LACT) Systems; Second Edition, May 1991; Reaffirmed May 2012 (''API 6.1''). This standard describes the design, installation, calibration, and operation of a LACT system. API 6.1 is proposed for removal due to the vagueness of its content. It is

not clear to the BLM what constitutes the enforceable content within the standard. To ensure consistent understanding and enforcement of the requirements, this rule would remove this standard and include new sections in the proposed rule (§§ 3174.101, 3174.103 and 3174.107) to capture the requirements that were intended to be addressed by API 6.1.

• API MPMS Chapter 7, Temperature Determination; First Edition, June 2001, Reaffirmed February 2012 (''API 7''). This standard describes the methods, equipment, and procedures for determining the temperature of petroleum and petroleum products under both static and dynamic conditions. API Chapter 7 is currently under revision by API. Many of the requirements in this chapter that were incorporated into the existing subpart 3174 have been included in the published editions of other API Chapter 7 sections. The BLM is therefore proposing to remove the general reference to Chapter 7 and include specific API Chapter 7 sections.

• API MPMS Chapter 7.3, Temperature Determination—Fixed Automatic Tank Temperature Systems; Second Edition, October 2011 (''API 7.3''). This standard describes the methods, equipment, and procedures for determining the temperature of petroleum and petroleum products under static conditions using automatic methods. API 7.3 is currently under revision by API. This proposed rule does not specifically address fixed tank temperature determination methods and dynamic temperature determination is covered under API 7.4. The BLM is therefore proposing to remove this standard.

• API MPMS Chapter 12—Calculation of Petroleum Quantities, Section 2, Calculation of Petroleum Quantities Using Dynamic Measurement Methods and Volumetric Correction Factors, Part 1, Introduction; Second Edition, May 1995; Errata July 2009; Reaffirmed March 2014 (''API 12.2.1''). This standard provides standardized calculation methods for the quantification of liquids and the determination of base prover volumes under defined conditions. The standard specifies the equations for computing correction factors, rules for rounding, calculational sequences, and discrimination levels to be employed in the calculations. API 12.2.1 is proposed for removal because the BLM believes the content within this standard is sufficiently covered in incorporated standards API 12.2.2, API 12.2.3 and API 12.2.4.

• API MPMS Chapter 13—Statistical Aspects of Measuring and Sampling, Section 1, Statistical Concepts and Procedures in Measurements; First Edition, June, 1985 Reaffirmed February 2011; Errata July 2013 (''API 13.1''). This standard covers the basic concepts involved in estimating errors by statistical techniques and ensuring that results are quoted in the most meaningful way. This standard also discusses the statistical procedures that should be followed in estimating a true quantity from one or more measurements and in deriving the range of uncertainty of the results. API 13.1 is proposed for removal because it has been superseded with no replacement available. The BLM believes the statistical concepts provided by this standard are sufficiently covered in incorporated API 13.3.

• API MPMS Chapter 18, Section 2, Custody Transfer of Crude Oil from Lease tanks Using Alternative Measurement Methods, First Edition, July 2016 (''API 18.2''). This standard defines the minimum equipment and methods used to determine the quantity and quality of oil being loaded from a lease tank to a truck trailer without requiring direct access to a lease tank gauge hatch. API 18.2 is proposed for removal due to the confusion surrounding the standard's content and how the standard fits into the BLM's PMT review and the BLM's approval process. The BLM has found that there is significant confusion as to what methods and processes outlined in API 18.2 are automatically approved and supersede the requirement that operators follow the PMT review and BLM approval process for a method or process not specifically outlined in the regulations. The BLM did not intend for API 18.2 to override the PMT review and BLM approval process. Rather, this API standard was meant to assist industry in considering alternative methods for the BLM to review for approval. The BLM still recommends that industry use API 18.2 as guidance when considering alternative methods for the BLM to review for approval.

Section 3174.31 Specific Measurement Performance Requirements

Currently located in existing § 3174.4, this proposed section specifies the measurement-performance requirement for each FMP. The uncertainty volume levels proposed in § 3174.31(a) align with the new FMP categories as previously discussed. The overall uncertainty tolerances have been reviewed, taking into consideration current equipment capabilities and industry standard practices and procedures. The BLM believes the current overall uncertainty tolerances of ±0.50 percent and ±1.50 percent are reasonable for very-high-volume (>15,000 Bbl per month) and high-volume (>1,500 Bbl per month and <15,000 Bbl/month) FMPs, respectively, and therefore the BLM would retain these uncertainty tolerances in the proposed rule. As in the current rule, the BLM believes the proposed rule's measurement uncertainties are reasonable, based on available equipment capabilities, industry standard practices and procedures, and BLM field experience. The BLM specifically requests comment on whether the proposed uncertainty requirements and production thresholds combinations are appropriate, or if different combinations should be considered. The BLM is particularly interested in the views of States and other non-Federal leaseholders with significant oil and gas production and who may have experience in implementing different thresholds based on their own assessments of risk tolerance and compliance costs. Specifically,

(1) Are the proposed uncertainty levels and FMP category combinations reasonable or unreasonable and why?

(2) What would be a better uncertainty level and FMP category recommendation to minimize risk of mismeasurement and compliance costs and why?

Notably, the new low-volume FMP category would be exempt from overall uncertainty requirements. This exemption is intended to cover the wells that are such low producers that they could be rendered uneconomical by the measurement performance thresholds, thereby avoiding premature shut-in or plugging of these wells. The assumption is that measurement within this category will comply with the requirements for manual tank gauge operations, which tend to be the least expensive measurement process.

The existing paragraph § 3174.4(b) would be renumbered to § 3174.31(b) with no change to the language concerning bias.

The existing paragraph § 3174.4(c) would be renumbered to § 3174.31(c) with no change to the language concerning verifiability.

The existing paragraph § 3174.4(d), requiring alternative equipment to meet or exceed the performance requirements of this section, would be moved to § 3170.3 because this requirement applies to both subparts 3174 and 3175.

Section 3174.40 Approved Measurement Equipment and Data Requirements

The BLM is proposing to add new §§ 3174.40 through 3174.43, which would consolidate approved measurement equipment and data requirements in one place, rather than having them scattered throughout the regulation, as they are in existing subpart 3174. This would make it easier for operators and BLM employees to find this information.

Section 3174.41 Measurement Equipment Requiring BLM Approval

Under the proposed rule, the equipment requiring BLM approval prior to use would be listed in § 3174.41. The introductory paragraph to § 3174.41 would direct operators to the BLM's website to locate the list of PMT-reviewed and BLM-approved equipment and corresponding requirements. This section also would inform operators that the BLM website provides instructions on how to apply for BLM approval for a piece of equipment through the PMT, and would list the BLM's recommended equipment testing procedures. These testing procedures would be recommended, rather than required, and would not be adopted through the notice-and-comment rule-making process. The BLM is proposing to recommend testing procedures rather than adopt a set of required testing procedures through notice-and-comment rule-making to allow the BLM flexibility in modifying its recommended procedures as technology develops, based on experience and input from operators and manufacturers, without undergoing the time-consuming rule-making process. The BLM is concerned that codifying approved testing procedures by regulation would encumber the BLM and operators with outdated testing procedures that conflict with testing procedures developed by industry associations or are not workable for unanticipated technologies or methods. In addition, by recommending testing procedures as opposed to requiring operators to use specific approved procedures, the BLM would give operators additional flexibility in choosing which procedures to employ, so long as they can demonstrate that the testing procedure results in reliable data. As explained in the discussion of proposed § 3170.30 earlier, the purpose of the PMT review process, and any associated testing procedures, would be to assess whether the proposed alternative equipment meets the minimum performance standards of subpart 3174. The BLM would tailor any recommended testing procedure to the narrow purpose of the PMT review process, which is verifying that the equipment meets the minimum performance standards codified in the regulation. The recommended testing procedures would be informed by the PMT's measurement expertise and, in general, would involve a baseline accuracy test and inform the PMT regarding a range of relevant operating conditions (*e.g.,* pressure) in which the equipment meets the minimum performances standards. Where possible, the BLM's recommended testing procedures will reflect widely accepted testing procedures, such as those developed by other regulatory agencies, equipment testing authorities, and industry associations (*e.g.,* the International Organization of Legal Metrology, the Measuring Instruments Directive, Measurement Canada, NIST, and API). The BLM recognizes that there is a tradeoff between this flexibility and allowing for public comment on testing procedures, through a rulemaking process. The BLM requests comment on this tradeoff. Finally, the BLM notes that the information provided on its website with respect to the PMT review process and its recommended testing procedures may be considered ''guidance documents'' subject to the requirements of Executive Order 13891, ''Promoting the Rule of Law Through Improved Agency Guidance Documents.''

Section 3174.42 Approved Measurement Equipment

Under the proposed rule, the measurement equipment that would be automatically approved for use would be listed in § 3174.42. The purpose of proposed § 3174.42 is to better organize subpart 3174 by listing in one place the equipment that does not require additional BLM approval. Specific section citations are included as well in order to expedite locating the requirements for the pieces of equipment within subpart 3174.

Section 3174.43 Data Submission and Notification Requirements

Under the proposed rule, § 3174.43(a) would list the information that operators must submit to the BLM using a Sundry Notice and paragraph (b) would list the information that they must submit to the BLM upon request of the Authorized Officer (AO).

The purpose of proposed § 3174.43 is to better organize subpart 3174 by listing in one place the data submission and notification requirements of subpart 3174. Specific section citations are included as well to expedite locating the requirement within subpart 3174.

Section 3174.50 Grandfathering

The BLM is proposing new § 3174.50, which introduces the concept of ''grandfathering'' to address certain facilities in operation prior to the effective date of this rule. The grandfathering provisions would no longer be applicable if the oil FMP moves to the proposed very-high volume category or if the measurement equipment is replaced.

Under the existing regulations (§§ 3174.6(b)(5)(ii)(A), 3174.6(b)(5)(iii), 3174.8(a)(1), and 3174.9(a)), the operator can use only certain pieces of equipment that have been approved by the BLM, through the PMT, and placed on the list of BLM-approved equipment. The implementation of this provision was delayed until January 17, 2019, under § 3174.2(g) and was further delayed by practical necessity (see IM 2018–077 (June 29, 2018)).

Proposed § 3174.50 would exempt all equipment listed in proposed § 3174.41 that is in place at high- or low-volume FMPs on or before the effective date of the final rule from having to have approval prior to use. Equipment at very-high-volume FMPs, measurement data systems (see proposed § 3174.121(a)) at high- and low-volume FMPs, and temporary measurement equipment (see proposed § 3174.140) at high- and low-volume FMPs would not be exempt regardless of the date of installation.

The BLM is not proposing to grandfather equipment installed at very-high-volume FMPs because of the higher risk of significant mismeasurement due to the high volume of oil measured and because the revenue resulting from the high volumes would make replacing equipment, if necessary, economically feasible. Portable electronic thermometers are not being proposed for grandfathering due to accuracy limitations between devices of different manufacture and models. Oil temperature is a significant factor in volume corrections to net standard volume. The BLM believes that grandfathering these devices without quantifying their accuracy at operating conditions could pose a significant risk to royalty income. Measurement data systems are not being proposed for grandfathering due to the potential that impacts to royalty income could be significant if net standard volume calculations are not properly calculated. Temporary measurement equipment is not proposed to be grandfathered due to issues that have been identified,

discussed further in the § 3174.140 discussion later in the preamble.

There are three reasons that the BLM is proposing to add this grandfathering provision. First, shortly after its inception, the PMT realized that the workload of reviewing data from all existing makes, models, and sizes of equipment requiring approval under existing subpart 3174 would be enormous and could take years to complete. Second, operators have expressed concerns about the cost of replacing existing equipment that was not on the BLM list of approved equipment, especially at lower-volume FMPs. Third, operators are concerned about purchasing equipment prior to the effective date of the implementation of the requirement to use of BLM-approved equipment. Specifically, operators are concerned about having to replace the newly purchased equipment should the equipment not be on the BLM's list of approved equipment. Grandfathering would allow any equipment in place at high- or low-volume FMPs prior to the effective date of the rule to remain in place until the equipment is replaced. Equipment installed after the effective date of the rule would not be grandfathered, but the requirement to use only BLM-approved equipment would not be effective until 2 years after the effective date of the rule.

Based on these concerns, the BLM proposes grandfathering all equipment listed in § 3174.41(a) through (i) and installed at high- or low-volume FMPs existing prior to the effective date of the final rule.

The BLM believes almost all of the FMPs in the proposed low-volume category use manual tank gauging and would not have been subject to BLM approval under the current regulations. Therefore, grandfathering FMPs in this category would not be expected to have a substantive impact with respect to measurement accuracy or cost-savings.

For the FMPs in the proposed high-volume category, the effect of grandfathering depends on the measurement method. If the FMP uses manual tank gauging, then there would be no incremental effect since the FMP would not have been subject to BLM approval under the current regulations. If the FMP uses measurement equipment, then that equipment would be grandfathered and would no longer be subject to BLM approval, as it is under the current regulations. The BLM notes that under current regulations, the uncertainty level is high enough such that most meters would easily meet the uncertainty level and be approved. Therefore, the grandfathering of this equipment would generally result in a reduction of administrative costs only. It would dramatically decrease the number of makes, models, and sizes of equipment that would be subject to review by the PMT and would assure operators that they would not have to replace this equipment, reducing a potential financial burden and providing some operational certainties to operators.

The BLM notes that the proposed rule would increase the number of volumetric categories from two to three, and would reduce the production threshold for the most highly regulated category from 30,000 bbl/month to 15,000 bbl/month. Compare current § 3174.4 with proposed §§ 3174.10, 3174.31. Due to this proposed change, more FMPs would fall in the ''very-high'' category and would be subject to more stringent measurement standards. On the whole, the BLM estimates that the additional costs associated with that change would more than offset the potential cost savings from the grandfathering provisions.

The proposed grandfathering could have some impacts on the BLM's ability to ensure accurate measurement, the absence of statistically significant bias, and verifiability, all of which are required under the performance goals in both the existing regulations and the proposed regulations (see current § 3174.4 and proposed § 3174.31). For example, for high-volume FMPs, which must comply with the uncertainty performance goals under § 3174.31 of the proposed rule, the grandfathering of equipment could impact the BLM's ability to ensure accurate measurement. The uncertainty calculation, which is used to determine and enforce overall uncertainty, would be based on the manufacturer's specifications for that device. It has been the BLM's experience that manufacturers develop specifications based on proprietary test procedures and test data interpretation methods that make it difficult to understand the actual field performance of their devices. The actual overall measurement uncertainty of these grandfathered devices has the potential to be substantially worse than the measurement uncertainty of those devices which are not grandfathered and that are subject to independent review and analysis by the PMT based on laboratory test data captured following the BLM test procedures.

The BLM is concerned with the inherent risk to the measurement uncertainty for Federal or Indian trust mineral percentages in the grandfathering of equipment currently in use. The BLM seeks comments on these proposed new conditions for grandfathering of existing equipment. Specifically, the BLM would request comment from the public on the following:

1. What would be the overall impact for not allowing or allowing this grandfathering option?
2. Are the thresholds for the proposed grandfathering set at appropriate levels?
3. Is there a better option or method for ensuring no risk to measurement of Federal or Indian trust mineral interest while allowing for the continued use of equipment currently in service?

### Section 3174.60 Timeframes for Compliance

The compliance timeframes for current subpart 3174 are located in existing § 3174.2(e), (f), and (g). Proposed § 3174.60 would establish new phase-in periods based on the FMP installation date and the FMP category (very-high-volume, high-volume, or low-volume).

Proposed § 3174.60(a) would require all FMPs installed after January 17, 2017, to comply with the existing and proposed subpart 3174 requirements. The BLM believes this timeframe is justified because existing requirements became effective on January 17, 2017, and operators with FMPs installed after that date should already be meeting these requirements. The majority of the changes in this proposed rule would clarify existing requirements, or make minor modifications to existing requirements, and would not require immediate retrofitting. This further supports requiring immediate compliance for these FMPs.

Based on the timing of the FMP number application process outlined in subpart 3173, the existing subpart 3174 phase-in periods for existing FMPs was intended to range from 1 to 3 years. Due to extended programming issues, the BLM's new AFMSS 2 data system's ability to accept FMP-number applications has been delayed, resulting in delays to the subpart 3174 phase-in periods. As of the publication of this proposed rule, the AFMSS 2 database is still not capable of accepting FMP number applications. For this reason the BLM is proposing § 3174.60(b) to modify the phase-in criteria for FMPs in existence after January 17, 2017. All very-high-volume FMPs existing as of January 17, 2017, would need to comply with this rule within 1 year after the effective date of the final rule. All high-volume and low-volume FMPs existing as of January 17, 2017, would need to comply with this rule within 2 years after the effective date of the final rule. After the existing rule became effective on January 17, 2017, operators began

requesting to use ATG and Coriolis meters at their existing FMPs. Subpart 3174 is not structured to allow early compliance at existing FMPs. The BLM issued policy in IM 2018–069, June 29, 2018 giving guidance and recommendations to BLM field offices to facilitate early adoption of ATG and Coriolis meters. Proposed § 3174.60(b)(3) would allow an operator to voluntarily begin full compliance with the requirements of this subpart at any FMP prior to the mandatory compliance dates specified in paragraphs (b)(1) and (b)(2). The BLM inspection and enforcement staff would need to inspect the FMP to the correct regulation, so the BLM would need to be notified if an FMP has begun early compliance. The operator would be required to notify the AO within 30 days by Sundry Notice of the date the FMP began early compliance.

Proposed § 3174.60(c) would require FMPs installed before January 17, 2017, to continue to comply with Onshore Oil and Gas Order No. 4, and any COAs, written orders, and applicable variances until the compliance deadlines specified in paragraph (b) are reached or the operator begins voluntary compliance with the subpart 3174 requirements.

Proposed § 3174.60(d) would rescind all requirements and standards related to measurement of oil established by Onshore Oil and Gas Order No. 4, and any COAs, written orders, and variances once the phase-in date has passed.

Proposed § 3174.60(e) would delay the equipment-approval requirements that are listed in proposed § 3174.41 for 2 years after the effective date of the final rule. This delay would provide the BLM with the time necessary to review and approve equipment as proposed in § 3174.41.

Section 3174.70 Measurement Location.

This new section would use identical language from existing § 3174.2 to prohibit commingling and off-lease measurement except where prior BLM approval has been obtained pursuant to the appropriate provisions in subpart 3173.

3174.80 Oil Storage Tank Equipment

This new section proposes only one minor change for oil storage tanks from existing § 3174.5(b). Under the proposed rule, compliance with standard API 12R1 would be limited to compliance with subsection 4 of that standard, as opposed to compliance with the entire recommended practice (RP). The existing rule incorporates the entire API RP 12R1, which requires the BLM to be involved in the maintenance and repair of tanks. The maintenance and repair of tanks is the responsibility of the operator and is not an appropriate subject for a regulation focused on accurate measurement.

Paragraphs (a) through (d) contain requirements that apply to all oil storage tanks, whether a single tank or tank battery connected to a LACT or set up for tank gauging measurement.

The requirements of paragraphs (e) and (f) would only apply to tanks configured for tank-gauging measurement.

3174.81 Oil Measurement by Tank Gauging

This section would contain the same language as the existing § 3174.5(a), with the exception of updating the citations for the tank gauging requirements. This section identifies, by the reference to the relevant sections in the subpart, the required processes for obtaining the data necessary to determine total net standard volume removed from a tank by manual tank gauging operations.

3174.82 Oil Tank Calibration

This section contains requirements for calibrating an oil storage tank when the tank is to be used as an FMP for tank-gauging operations. The same API standards are being proposed for incorporation as in current § 3174.5(c), namely, API 2.2A, API 2.2B, API 2.2C, and API RP 2556.

In addition to retaining the requirements of current § 3174.5(c), three additional requirements are being proposed for FMP oil-tank calibration. First, the tank-capacity tables would be required to be calculated for a tank-shell temperature of 60 °F. This is recommended in API 2.2A and the BLM believes this should be a requirement, rather than an option. This change would standardize all FMP tank-capacity tables to one tank shell temperature. Second, FMP tank-capacity tables would be required to be recalculated if the reference gauge point is changed. This is another recommendation in API 2.2A that the BLM believes should be a requirement in order to ensure the most accurate volumes are being obtained from FMP tank-capacity tables. Third, FMP tank-calibration charts (tank tables) would be required to be submitted to the AO by Sundry Notice within 45 days after a calibration or recalculation of charts. This is a change to the existing rule that only requires operators to submit FMP tank calibration charts to the AO after calibration without specifying how they are to be submitted. The BLM is proposing this change to require submission both upon initial calibration and whenever an FMP tank-calibration chart is recalculated for any reason. The BLM needs to have the most current FMP tank-calibration charts in its records and is specifying in proposed § 3174.82(d) that FMP tank-calibration charts (tank tables) would be required to be submitted to the AO by Sundry Notice would provide a common tracking mechanism for the BLM to use to ensure that this requirement has been met.

3174.83 Tank Gauging Procedures

Proposed § 3174.83(a) reiterates the requirement located in existing § 3174.6(a). Proposed § 3174.83 references other sections that contain procedures that operators must follow to determine the quality and quantity of oil measured under field conditions at an FMP. This section employs the same language as existing § 3174.6(a) with exception of adding the cross-references to other sections.

Proposed § 3174.83(b) follows existing § 3174.6(b), with the exception of removing a reference to API 18.2. The BLM proposes to remove the reference to API 18.2 because of the confusion surrounding the application of the content of the standard. The previous discussion of § 3174.30 provides more detail concerning API 18.2 and the decision to not include it in revised subpart 3174.

Proposed § 3174.83(c) contains proposed changes to the run-ticket section (existing § 3174.12(a)). There has been confusion both within the BLM and industry as to what extent operators must complete the calculations required in existing § 3174.12(a) during field operations. Some believe the existing rule requires that field operations must complete all the run-ticket calculations found in § 3174.12(a). This was not the BLM's intent. The current regulation dictates the required calculations, but not when or where these calculations could be made. This proposed section would clarify that the field staff is required to collect only the observed data specified in proposed § 3174.161(a) in the field.

Proposed § 3174.83(d) expresses the same requirement as existing § 3174.6(b)(1).

Proposed § 3174.83(e) reflects the requirement currently contained in existing § 3174.6 (b)(7). However, the reference to ''break[ing] the tank load line valve seal'' would be removed. There may be situations where the transfer is not to a tanker truck but rather down a pipeline, so this language

has been deleted to remove any potential confusion.

3174.84 Tank Oil Sampling

This section reflects the requirement currently located in existing § 3174.6(b)(3), with a proposed modification that would allow for alternative methods approved by the BLM.

3174.85 Determining S&W Content

This section reflects the requirement currently located in existing § 3174.6(b)(6). This proposed section employs the same language as current § 3174.6(b)(6) with the exception of updating the cross-references.

3174.86 Tank Oil Temperature Determination

This section reflects the requirements currently located in existing § 3174.6(b)(2) with a few clarifying changes.

Under § 3174.86 of the proposed rule, the BLM would eliminate the sentence in existing § 3174.6(b)(2) which reads: ''Opening temperature may be determined before, during, or after sampling.'' The BLM has determined that this sentence may cause confusion and is unnecessary. The temperature of oil contained in an FMP tank would be required to be determined by following the requirements of paragraphs (a)(1) through (4) of this section, and be performed at the appropriate point during the custody transfer process in accordance with standard industry procedures.

Under § 3174.86(a) of the proposed rule, the BLM would add language that says, ''For tanks less than 5000 bbl nominal capacity, a single temperature measurement at the middle of the liquid may be used.'' The existing regulation does not have language concerning the temperature determination procedures based on the size of the tank. Therefore, there has been considerable confusion among operators and purchasers as to whether they were required to take multiple temperatures during the custody transfer procedure, or if the single temperature in the middle of the fluid column is sufficient. By including this language, the fact that a single temperature is sufficient for tanks of less than 5,000 bbls capacity is made clear.

With § 3174.86(c) of the proposed rule, the BLM is seeking to clarify and expand the use of electronic thermometers for tank oil-temperature determination. The PMT would review the specific makes and models of electronic thermometers and the BLM would list the approved equipment at *www.blm.gov.* The temperature of the oil has a direct effect on the royalty determination; therefore, it is critical that the device that measures oil temperature be compliant with the performance standards of the proposed regulation. This change would bring the requirements for electronic thermometers in line with the standards for temperature transmitters that perform the same function in LACT and CMS transfers. The proposed change also seeks to expand the use of electronic thermometers to allow for a flow-weighted average of the temperature during the transfer in lieu of a single opening and closing point. The BLM recognizes that the functionality of many electronic thermometers allow for live data over the entire transfer period which can allow for a more representative average for the oil temperature. This change would still meet the intent of the current regulation, but would allow operators to create more automated systems if they desire.

3174.87 Observed Oil Gravity Determination

This section reflects the requirements currently located in § 3174.6(b)(4). This proposed section employs the same language as that found in current § 3174.6(b)(4), with exception of updating the cross-references.

3174.88 Measuring Tank Fluid Level

Proposed § 3174.88 would essentially retain the manual tank gauging and ATG methods of tank measurement found in current § 3174.6(b)(5). The proposed changes would primarily remove obsolete requirements and provide clarification on requirements that have caused confusion.

In an attempt to simplify subpart 3174, proposed § 3174.88(a) would remove references to outage gauging and to an outage gauging bob. The BLM is not aware of any outage gauging method of measurement taking place at any FMP.

Under § 3174.88(a) of the proposed rule, the BLM would eliminate the sentence from existing § 3174.6(b)(5)(i)(E) which reads: ''The same tape and bob must be used for both opening and closing gauges.'' The BLM has determined that this sentence is unnecessary since all tapes and bobs are required to be verified for accuracy when new, when repaired, and at least annually from the in-service date thereafter, by comparison with a reference (*e.g.,* a master tape) in accordance with API MPMS 3.1A. Annex A. By removing the ''same tape and bob'' sentence, the tape and bob used for opening and closing gauging procedures does not have to be the same. However, the tape and bob measurement equipment must still be verified and in compliance with API MPMS 3.1A.

Under § 3174.88(a)(4) of the proposed rule, a suitable product-indicating paste may be used, but the use of chalk or talcum powder would be prohibited. BLM field offices have stated that the product-indicating paste available on the market has a melting point below the temperature of oil contained in the storage tanks. This creates a situation where the product being gauged is evaporating faster than the gauge tape can be read and the product indicating paste is ineffective in facilitating the reading of the gauge tape. API 3.1A discourages the use of chalk or talcum powder in the gauging procedure but also fails to address situations in which oil temperatures are higher than the melting point of known available product-indicating pastes.

The BLM is requesting comments and recommendations on how to address tank gauging of evaporating product with temperatures above the melting point of known available product-indicating pastes.

In proposed § 3174.88(b)(2), the proposed rule would clarify the installation requirements for ATGs. The existing regulation incorporates API 3.1B; however, inspectors and operators have expressed confusion about the installation requirements. The proposed change would state the exact sections of the API 3.1B that provide guidance on ATG installation, and would also reference the manufacturer's recommendations and any conditions of approval the BLM has placed on the equipment.

The proposed rule would modify the requirement for verification logs on ATGs. The existing regulation requires verification of the ATG each month (or before next sale, whichever is longer) and requires that the operator maintain a detailed log of the verifications that is available upon request to the BLM. This can create problems for BLM inspectors, as operators are not required to keep the log on site, so there is no immediately available evidence that an operator conducted the verifications as required by the regulation. This can result in an undue administrative burden on BLM inspectors, who must request operator's logs to verify the compliance. The proposed rule seeks to alleviate this burden with a requirement in § 3174.88(b)(5) that operators provide a statement of date of last verification at the FMP. This would allow BLM inspectors to check for compliance without log requests to the operators.

This proposed change would also bring the verification date requirements of this part in line with the subpart 3175 information requirements that flow-computer verification must be available on-site.

The proposed rule would remove the references to dynamic measurement from the tank-gauging section of the regulation. The BLM has reviewed the existing regulation and found that the provisions regarding dynamic measurement do not fit in this section. The prescriptive nature of the process laid out for tank gauging is such that dynamic measurement would provide no benefit to the operator. The proposed regulation would let dynamic measurement be addressed by § 3174.170, the section pertaining to oil measurement by other methods. This move would reduce confusion, as any dynamic method would have to go through a PMT review process. The proposed change would also remove references to API 18.2 in general and would replace them with specific references to ATG, automatic temperature measurement, and automatic sampling in order to narrow the scope of the section and reduce confusion. The change would clarify this section while still allowing the operator to use other methods through the alternative methods approval process.

3174.90 LACT systems—General Requirements

Proposed § 3174.90(a) and (b) would use the same language as the existing § 3174.7(a) and (b) for LACT construction, operation, and proving references, only updating regulatory citations to match proposed numbering changes for this subpart.

Proposed § 3174.90(c) would have the same language that is in existing § 3174.7(d), concerning the LACT components being accessible for inspection.

Proposed § 3174.90(d) would retain the language of existing § 3174.7(g), which prohibits the use of automatic temperature compensators and automatic temperature and gravity compensators, and *would additionally make clear that these items would not be grandfathered under the new equipment grandfathering section* (proposed § 3174.50). Because there are relatively few LACT systems that still employ automatic temperature compensators or automatic temperature and gravity compensators, the BLM believes not grandfathering these items would not result in any significant costs to industry. In addition, because automatic temperature compensators or automatic temperature and gravity compensators used in LACT units do not meet the independent verification requirements of this subpart, they are not eligible for grandfathering. The BLM seeks comment on its assumption that not grandfathering this equipment would not result in significant costs to industry.

Proposed § 3174.90(e) would require the operator to notify the AO by Sundry Notice within 30 days after repair of any LACT system failures or equipment malfunctions that may have resulted in measurement error. Existing § 3174.7(e) requires operators to notify the AO within 72 hours of a LACT failure that may have resulted in measurement error. Industry has expressed concerns with the 72-hour timeframe as being difficult to comply with, in that it may not be possible to notify the BLM about a failure within 72 hours while troubleshooting or repair operations might still be taking place. The BLM finds this to be a valid concern and, considering the trend towards implementing ELM in LACT systems and the audit capabilities of these ELM systems, the BLM believes a repair notification would still provide the BLM with the capability to ensure all production has been accounted for. The BLM believes a notification of LACT repair would provide the same regulatory benefit as a 72-hour notification of a LACT failure.

Proposed § 3174.90(f) would have the same language for tests conducted on oil samples extracted from a LACT system sampler for determination of sediment and water (S&W) content and observed oil gravity as found in existing § 3174.7(f). This proposed rule would update regulatory citations to match proposed numbering changes for this subpart where referring to determination of S&W and observed oil gravity requirements.

Proposed § 3174.90(g) would require an average temperature to be calculated for the measurement period covered under the measurement ticket and require this average temperature to be used in determining the correction for the effect of temperature on a liquid (CTL correction factor). This proposed language would add clarification with respect to the time period for calculating the temperature average, *i.e.* the measurement period covered under the measurement ticket. Existing § 3174.8(b)(6)(vi) states that the average temperature calculated since the measurement ticket was opened must be used in determining the CTL correction factor. There has been confusion within the BLM as to whether this requires averaging for the entire period covered by the measurement ticket or a short period of time from the opening of the measurement ticket could be used for an average temperature calculation. The BLM believes this proposed change adequately clarifies the intent of the existing requirement without imposing any additional burden on the operators.

Proposed § 3174.90(h) would add new pressure determination requirements in order to clarify when a pressure transducer would be required instead of a pressure gauge. The BLM believes there are circumstances where a pressure transducer should be required for higher accuracy. These circumstances pertain to ELM use and automatic-adjusting back-pressure valves. Existing § 3174.8(b)(5) requires a pressure-indicating device be installed and used to provide pressure data for calculating the CPL correction factor. This language is vague and has created confusion both within industry and the BLM with respect to what is meant by ''pressure-indicating device.'' Some interpreted this to mean a pressure gauge while others believed a pressure transducer is required. The BLM believes this proposed change adequately clarifies the conditions under which a pressure gauge would be allowed, and when a pressure transducer would be required. The BLM believes this change would impose minimal additional burden on operators, as the use of ELM and automatic-adjusting back-pressure valves are optional on high-volume FMP LACT systems, while providing the benefit of higher accuracy measurement.

Proposed § 3174.90(i) is similar to existing § 3174.8(b)(7), which requires the calculation of net standard volume for each measurement ticket. However, the proposed rule would give operators the flexibility to use other methods of calculation with BLM approval.

Proposed § 3174.90(j) restates the requirement of existing § 3174.7(c), which pertains to completing measurement tickets.

3174.100 LACT Systems—Components and Operating Requirements

This section introduces the LACT component and operational requirement sections of this rule, specifically proposed §§ 3174.101 through 3174.108. This section constitutes a change from the existing § 3174.8(a) and (b) in that the BLM has decided not to incorporate the API 6.1 standards for equipment and operational requirements, but rather to list the minimum components and their respective operational requirements, similar to Onshore Order No 4. When subpart 3174 was initially proposed, it

listed LACT system components like Onshore Order No 4. However, the BLM received numerous comments stating that the rule should reference API 6.1 rather than list each component. Since subpart 3174 was published, many within the BLM have expressed confusion over what constitutes the minimum equipment requirements within the API standard. Existing subpart 3174 says a LACT must include all the equipment listed in API 6.1. In API 6.1, the reference to LACT components consists of a diagram that lists several pieces as ''optional.'' Existing subpart 3174 therefore arguably removes any flexibility industry may need in LACT construction and operation. Many of the listed components in API 6.1 are not necessary for determining quality and quantity of oil measured, and the BLM does not believe they should be considered mandatory equipment.

3174.101 Charging Pump and Motor

This is a new section that does not have a corollary in existing subpart 3174. This section would require operators to install a charge pump and motor if the static head is insufficient to provide a net positive suction to achieve fluid pressure compatible with the oil fluid properties. Oil must be maintained under enough pressure to ensure the oil is above its bubble-point pressure to prevent gas flashing within the system. In order to meet this, the oil must be ''pushed'' through the system, not ''pulled'' by some downstream means of suction.

3174.102 Sampling and Mixing System

Sampling and mixing system requirements are currently located in existing § 3174.8(b)(1). This proposed rule seeks to replace the current requirement for testing, pursuant to API 8.2. Existing § 3174.8(b)(1) requires all sampling systems, even those of the same design and construction to be individually tested. Operators expressed concern that compliance with this requirement to test all sampling systems, even those of the same design and construction, is unnecessarily burdensome and provides no benefit to the Federal Government. It is common for the same sampling-system design to be installed in many LACT units. The BLM agrees with this assessment and seeks to change the regulation to bring it in line with other equipment standards in the regulation and allow for a single test per design. The *www.blm.gov* website would list approved systems allowed on any location. The proposed change would reduce the overall burden to operators and simplify the inspection process for the BLM.

Proposed § 3174.102(a) would use identical language found in § 3174.8(b)(1) for sample extractor probe requirements, with the exception of § 3174.102(a)(3), which would clarify the sample-probe requirements found in § 3174.8(b)(1)(iii). The BLM has received numerous questions from operators and inspectors about the current sample-probe marking requirement. The proposed changes would reduce confusion with respect to the marking of the sample probe. The intent of the current regulation is that the direction of the opening of a bevel cut probe be marked on the probe body. The proposed rule states this requirement more clearly.

Proposed § 3174.102(b) and (d) contain new requirements not found in the current rule concerning sampling frequency and mixing system objectives. These additions would further clarify the sampling requirements in order to address questions received from operators.

Proposed § 3174.102(c) would expand on language found in § 3174.8(b)(3) for sample container requirements. In addition to retaining the current language requiring the sample container be emptied and cleaned upon completion of sample withdrawal, this proposed rule would also add language for holding the sample under pressure and being equipped with a vapor-proof top closure to prevent the unnecessary escape of vapor. This additional language would further clarify sample container requirements to address questions received from operators.

3174.103 Air Eliminator

This section does not have a corollary in existing subpart 3174. This section would require operators to install an air eliminator to prevent gas or air from entering the meter and causing mismeasurement of oil. The proposed rule would also allow the air eliminator to be integrated with an optional strainer device should an operator choose to configure the LACT this way.

3174.104 LACT Meter

The existing regulation at § 3174.8(a)(1) allows for the use of positive displacement (PD) and Coriolis meters on LACT units. The proposed rule would also allow for other meter types approved by the BLM. The BLM recognizes that other technologies could now, or in the future, meet the BLM's performance requirements for use on LACT units. This change would clarify how such technologies could be incorporated into the BLM's regulatory process.

Proposed § 3174.104(a) clarifies the non-resettable totalizer requirement of existing § 3174.8(b)(4). The proposed rule would make it clear that the non-resettable totalizer display may reside in an electronic flow computer. The non-resettable totalizer could display through the flow computer, but the output must be from the meter. The BLM has recognized that some flow computers have the capability to generate totalizer readings from the flow computer itself. The intent of the existing regulation is that the meter must generate the values for the non-resettable totalizer. The proposed rule would clarify this intent while ensuring that operators have the convenience of displaying the meter reading through the flow computer.

3174.105 Electronic Temperature Averaging Device

The BLM's requirements for electronic temperature averaging devices are currently located in existing § 3174.8(b)(6). This proposed rule would clarify a point of confusion in the existing regulation by specifying in proposed § 3174.105(f) that the BLM would allow a flow computer to perform the temperature averaging. The change makes clear that the regulation allows for stand-alone temperature averaging devices or temperature transmitters working in conjunction with a flow computer. Pursuant to proposed § 3174.105(a), a stand-alone temperature-averaging device would require PMT review and BLM approval. Similarly, under proposed § 3174.105(b), a temperature transducer must have received BLM approval. The approved equipment list at *www.blm.gov* would identify the makes and models of approved stand-alone temperature-averaging devices and temperature transducers.

3174.106 Pressure-Indicating Device

The existing regulation, under § 3174.8(b)(5) and § 3174.9(e)(1), allows operators to use a pressure transmitter on LACT systems and requires a pressure transmitter for CMS, but is silent on the approval process for that equipment. A requirement for pressure-transmitter approval is only referenced indirectly in existing § 3174.1, the definitions section. The proposed change would remove any confusion by spelling out the requirements within this section.

The BLM has heard from operators and BLM inspectors that the language in the existing regulation on placement of the pressure-indicating device is not

clear. The proposed rule would clarify this requirement with new wording on pressure-indicating device placement. The concern pertained to LACT units where the pressure-indicating device was placed in the tee of the prover connection. Some inspectors and operators interpreted the wording of the existing regulation to disallow this placement. This was not the BLM's intent; therefore, the proposed change to the wording in § 3174.106(a) would require the placement between the downstream side of the meter and the upstream side of the first valve in the prover connection. This change would assist in uniform enforcement of the regulation.

3174.107 Meter-Proving Connections

This proposed section does not have a corollary in existing subpart 3174. This section specifies requirements for meter-proving connections, including a leak detecting double block and bleed-valve configuration. Existing subpart 3174 does not reference meter-proving connections or leak-detection systems and instead incorporates the API 6.1 standard, which is not sufficiently specific. Leak detection during the proving process is critical to determining an accurate meter factor. Any leakage through the prover loops will result in a meter factor that incorrectly adjusts for meter performance, potentially resulting in measurement bias, which could result in a loss of royalty.

3174.108 Back-Pressure and Check Valves

This section would retain existing § 3174.8(a)(3)'s requirement for operators to have back-pressure valves or other controllable means of applying back pressure on their LACT systems. Proposed § 3174.108 would also provide operators with the option of installing an automatic-adjusting back-pressure control to handle changing flowing conditions downstream. This option is being proposed because this technology has shown positive results in both meter performance and proving operations during field operations. LACTs that flow into constantly changing downstream pressures showed repeatability problems during proving operations. Provings performed on LACTs with automatic-adjusting back-pressure control equipment have not shown the repeatability problems that are found on systems that have a fixed-setting back-pressure valve when downstream pressures constantly change.

3174.110 Coriolis Meter Operating Requirements

This section would provide operating requirements for the Coriolis meter—whether it is a stand-alone unit or is part of a LACT—and its transmitter. This section would remove the provision pertaining to meter specifications in existing § 3174.10(b) and would keep or modify the remaining paragraphs of existing § 3174.10.

Proposed § 3174.110(a) and (b) would require Coriolis meters and Coriolis transmitters to be on the approved equipment list at *www.blm.gov.* The proposed paragraph (a) requirement is currently located in existing § 3174.9(b). Proposed paragraph (b) is new and it would allow for a Coriolis transmitter to have a separate approval from a Coriolis meter. A Coriolis meter is always used in conjunction with a transmitter. The BLM believes that this proposed change will alleviate concerns that each meter and transmitter combination would require additional individual approval. The BLM is seeking comments on how this can be achieved in practice. Specifically, the BLM requests comment from the public on the following:

(1) How would a Coriolis meter be tested without a transmitter?

(2) Does the performance of a Coriolis meter change based on the type of transmitter installed?

(3) How would the BLM prevent the transmitter performance contributing to the meter uncertainty twice—first if a transmitter is required to test the Coriolis meter and second if a transmitter is tested separately?

(4) Is there data to support the position that a transmitter's contribution to meter uncertainty is insignificant and therefore will not change a Coriolis meter's uncertainty?

Proposed § 3174.110(c) is the same as existing § 3174.10(a).

Proposed § 3174.110(d) would clarify the requirement for the non-resettable totalizer that is currently located in existing 3174.10(c) by stating that the non-resettable totalizer display may reside in an electronic-flow computer, but it must be generated by the Coriolis meter. It further clarifies that a flow-computer generated totalizer would not fulfill the requirements of subpart 3174.

Proposed § 3174.110(e) would clarify existing § 3174.10(d) by specifying when a meter-verification procedure must be conducted. Existing § 3174.10(d) does not specify when the zero-verification procedure must be conducted. This rule would clearly state that a meter zero verification would need to be conducted during the proving process and at any time the AO would request it. Two minor changes would be made in the fourth sentence of proposed § 3174.110(e): Adding the word ''reading'' after the word ''zero,'' which was inadvertently left out of the next-to-last sentence of existing § 3174.10(d), and changing a cross reference.

Proposed § 3174.110(f) would require the same on-site display requirements of existing § 3174.10(e)(1) and (2) with exception of moving the instantaneous pressure reading and the instantaneous temperature reading requirements to proposed § 3174.120(b), and revising the requirement to display the gross standard volume and indicating this as the non-resettable totalizer reading. The non-resettable totalizer is a reading of the indicated volume. The rule would change the display requirement under § 3174.110(f)(iv) and (v) to require indicated volumes.

3174.120 Electronic Liquids Measurement, ELM (Secondary and Tertiary Device)

This proposed section applies to flow computers (ELM systems) that are connected to Coriolis meters and their transmitters. Although this section does not have a direct corollary in existing subpart 3174, it contains many of the same requirements that appear in the existing Coriolis meter regulations at § 3174.10. ELM systems take and utilize the data that Coriolis-meter transmitters feed them to make calculations and corrections. Not all Coriolis meters use ELM systems. The existing Coriolis meter regulations at § 3174.10 have caused some confusion in the regulated community as to whether operators are required to use ELM systems with their Coriolis meters. The BLM hopes to eliminate this confusion by separating out the ELM systems requirements in proposed § 3174.120 from the Coriolis meter requirements at proposed § 3174.110.

The existing regulation requires operators to use a tertiary device (flow computer and associated memory, calculation, and display functions) for all CMS FMPs. This existing requirement is mentioned minimally in the definitions section at existing § 3174.1, under the definition for Coriolis measurement system (CMS), and provides little in the way of details for this requirement. The proposed changes bring the software-testing requirements for electronic oil measurement in line with the requirements of electronic gas measurement in subpart 3175. The BLM believes that it is valuable to have uniformity in these requirements to

alleviate the burdens that having two differing test procedures would create only to achieve essentially the same results. Since the electronic oil measurement system software performs calculations that directly affect royalty reporting, the BLM has deemed it critical to ensure that the software meets the performance standards of the regulation. The proposed rule would specify the requirements for ELM systems and remove any ambiguity in the existing regulation.

3174.121 Measurement Data System (MDS)

This section does not have a corollary in existing subpart 3174. This section would establish that measurement data systems (MDS) must be approved by the BLM for use at an FMP. MDS are designed to gather, edit, store, and report measurement data. The BLM has developed a test procedure that compares raw data retrieved from a flow computer directly to both edited and unedited data obtained from the MDS under test. The BLM would assess this data to ensure that the internal correction and volume calculations comply with the appropriate incorporated API standards for sequence and rounding, that raw data is preserved and maintained, and that edited data is clearly indicated as such. By requiring that MDSs be BLM approved, industry would not have any questions or confusion when selecting an MDS system for use at an FMP. This section would also allow the BLM to approve and list alternative methods of calculating net standard volume on the *www.blm.gov* website. Measurement data systems would not be subject to the exemption provided for in proposed § 3174.50(a) and would have to be approved by the BLM prior to use.

3174.130 Coriolis Measurement Systems (CMS)—General Requirements and Components

The BLM's general requirements for Coriolis measurement applications independent of LACT measurement systems are currently located in existing § 3174.9. This proposed rule would only make minor changes to the requirements of existing § 3174.9.

Paragraph (b) would require each CMS to utilize an ELM and follow the requirements of proposed § 3174.120. This is intended to reflect the new ELM section at proposed § 3174.120, and would not impose burdensome additional requirements since the ELM section is comprised primarily of existing requirements that are found in existing § 3174.10. These organizational changes are intended to make the requirements clearer and provide a better organization of the requirements.

Paragraph (e) would add a new provision (§ 3174.130(e)(5)) to require block valves at both ends of the system in order to allow for zero-flow verification.

Paragraph (g) would update the API standard reference for calculating net standard volume and include a provision to allow for alternative methods of calculating net standard volume that the BLM may approve and list on the *www.blm.gov* website.

Paragraph (h) would clarify the requirements for CMS units that are attached to oil-hauling trucks or trailers that move between oil-loading locations. Paragraphs (h)(7) and (8) would clarify that each truck load using a Truck Mounted Coriolis (TMC) CMS would require the seal on the sales valve to be replaced. This is to avoid confusion with the § 3173.20 seal requirement for multi-truck loads. The intent of that section of § 3173.20 is to deal with loads on multiple trucks that are recorded on a single run ticket. As each TMC would record a truck load on an ELM system attached to that truck, the seal on and off would need to be recorded for auditing purposes.

The BLM is seeking comment on the total system performance that would be achievable for both truck mounted CMS and systems that are placed at the dumps of separators.

3174.140 Temporary Measurement

The BLM is proposing to add a new § 3174.140 to address temporary measurement. Temporary measurement is defined in 43 CFR 3170.10 as a meter that is in place for less than 3 months and measures oil on which royalty is owed. Temporary measurement typically applies to an oil meter that is part of a measurement skid used to measure the production from a newly completed well before the permanent measurement facility is installed. The existing rule does not address temporary measurement.

Under proposed § 3174.140, a temporary oil meter would have to meet all the requirements of an FMP with some modified requirements based on the limited timeframe the meter will be on the location (for example, proving requirements).

3174.150 Meter-Proving Requirements

This section introduces the eight following sections that specify the minimum requirements for conducting volumetric meter proving for all FMP meters (§§ 3174.151 through 3174.158). A meter proving is the procedure used to determine a meter factor required to calculate the volume of liquid measured through a meter. Currently all proving requirements are found in existing § 3174.11. By separating these requirements into sequential sections, the BLM believes this will make identifying and citing the specific requirements less burdensome for both industry and the BLM.

3174.151 Meter Prover

Proposed § 3174.151 maintains the existing meter-prover requirements found in existing § 3174.11(b) and includes new language that would add flexibility for additional meter provers as new technology emerges.

Under existing § 3174.11(b), acceptable provers are PD master meters, Coriolis master meters, and displacement provers. These are the only meter provers identified as acceptable to the BLM at this time. Since publication of the existing regulations, industry has recommended that the BLM maintain the flexibility to accept future meter-proving methods and technology. This proposed rule would still recognize positive-displacement master meters, Coriolis master meters, and displacement provers as automatically accepted, but would also include the flexibility for the BLM to approve other provers. The BLM is proposing this addition to support the development of new technologies and procedures that meet the performance requirements of the regulation but that are not known or available at the time this proposed rule becomes final.

The BLM is seeking comments on other proving technologies or procedures that are not presented in this proposed rule, but that meet its requirements.

3174.152 Meter-Proving Runs

Proposed § 3174.152(a) would modify the proving requirements currently located in existing § 3174.11(c)(1) based on feedback from operators and BLM inspectors on the enforceability of the existing regulation. Existing § 3174.11(c)(1) requires meter proving to be performed under normal operating fluid pressure, fluid temperature, and fluid type and composition. BLM inspectors have found it difficult to define a ''normal operating'' range and so enforcing this requirement has become burdensome. Therefore, the proposed rule would use the proving conditions at the time of proving to define the ''normal operating'' range for the period between the provings of the meter. This would allow inspectors to use proving reports from the previous period to ensure that the unit has stayed within the normal operating span for

that period. The limits of the ''normal range'' would remain the same as the current regulation, but with the ''normal'' point defined by the conditions at the time of proving. Whatever the flow rate, pressure, temperature, and API gravity the meter is proven at would become the new ''normal'' operational points, and the unit would have to maintain operation within 10 percent of that defined value for flow rate and pressure, 10 °F of the temperature, and 5 degrees API for the gravity. The BLM seeks comments on these ranges and any supporting data that may show that the range should, without affecting the meter factor, be wider or narrower. The proposed changes also would address short-term changes in conditions that might occur between proving cycles. The intent of the existing regulation is not to require multiple meter provings for short-term operations like pigging or temporary spikes in temperature. Therefore, the proposed rule defines a period of time necessary for a change in operating conditions to require a proving.

Since publication of the existing subpart 3174 regulations, industry has expressed concerns about the requirement of ''normal'' operating conditions for proving and has asked the BLM to consider a meter's linear range as a replacement for a ''normal'' operating condition requirement during proving operations. This proposed rule would address concerns on how ''normal'' operating conditions would be determined and used. The BLM is not familiar enough with the meter linear range concept to include it in this proposed rule, and instead requests that industry provide data on how to determine a meter's linear range and how this could be applied to meter provings.

Proposed § 3174.152(b) reproduces the requirement of current § 3174.11(c)(2) requiring the use of pulse interpolation in accordance with API 4.6 if each proving run is not of sufficient volume to generate at least 10,000 pulses.

Under existing § 3174.11(c)(3), proving runs must be made until the calculated meter factor or meter generated pulses from five consecutive runs match within a tolerance of 0.0005 (0.05 percent) between the highest and the lowest value. In field proving conditions, like separator-mounted CMS where limited volumes of proving fluid is available, this has shown to be difficult to achieve. Proposed § 3174.152(c) would incorporate all the language from current § 3174.11(c)(3), and would expand on the allowable runs for a meter proving. The BLM recognizes that the API 4.8 standard provides a table for various runs and repeatability that meet a 0.027 percent uncertainty. Therefore, the proposed rule would incorporate that table into the regulation to allow greater proving flexibility while keeping the same performance standard for the proving.

Proposed §§ 3174.152(d), (e), (f), and (g) would incorporate all the language from existing §§ 3174.11(c)(4), (5), (7), and (8) for meter factor computations and acceptable meter factors ranges.

Proposed § 3174.152(h) would incorporate the language from existing § 3174.11(c)(6) for the use of multiple meter factors determined over a range of normal conditions. The BLM has not received much feedback on this provision in the existing regulations and does not know whether operators are using this method or if it can be applied to field operations. The BLM requests comments on this provision, including supporting data showing whether this concept is feasible for use at FMPs, needs additional refinement, or is not feasible and should be removed from the rule.

Proposed § 3174.152(i) would combine and expand on the language found in existing § 3174.11(c)(9) and (10) relating to back-pressure adjustments and composite meter factors. The existing rule separates the requirements for back-pressure valve adjustments at the conclusion of proving operations and composite meter-factor use.

There has been confusion within the BLM and industry as to what back-pressure adjustments are allowed under the existing regulations after proving a meter. The existing regulation states that back-pressure-valve adjustment is only allowed on PD meters. This was based on a BLM misconception about how Coriolis meters would be used; the BLM now realizes that the existing rule does not cover all possible LACT configurations. This proposed rule would allow automatic-adjusting back-pressure systems, which would resolve confusion concerning back-pressure-valve adjustment after proving.

The proposed rule would place restrictions on back-pressure adjustments when an operator chooses to use a composite meter factor. The existing rule only allows composite meter factors with PD meters. The BLM thought that Coriolis meters, whether used in a LACT or CMS, would have flow computers installed on them that would utilize a pressure transducer for live pressure readings when determining the CPL. The BLM now understands that operators use Coriolis meters in LACTs that do not have flow computers installed and want to use composite meter factor in these situations. These LACT systems are intended to flow at steady pressures with fixed-setting back-pressure valves. The BLM realizes that the existing rule does not cover this Coriolis/LACT configuration. The proposed rule would allow composite meter factors to be used with any meter, PD, Coriolis, or any other meter the BLM may approve, but would restrict a LACT using a composite meter factor to require fixed-setting back-pressure valves, and would include limitations to back pressure adjustments

3174.153 Minimum Proving Frequency

The BLM's requirements for minimum proving frequency are currently located in existing § 3174.11(d). This proposed section would essentially retain the current requirements of existing § 3174.11(d), with the two following modifications.

Under existing § 3174.11(d)(1), the operator must prove the FMP meter before production is removed or sold following initial meter installation. Industry has questioned the timing of this requirement and has requested that the BLM give operators more time before requiring them to conduct the initial proving. The BLM has considered this request and agrees that more time can be given without any negative impacts to measurement accuracy. Proposed § 3174.153(a) would require that an FMP meter be proved within 15 days after the first flow after installation of the FMP meter. The BLM believes an additional 15 days would be enough time to fill all load lines and ensure proper meter functioning. A meter factor can be applied to measured volumes from the first flow through the time of closing the measurement ticket. An additional 15 days from first flow through a meter would not affect volumes reported for royalty determination.

Under existing § 3174.11(d)(4), the operator must prove the FMP meter when any event in which modification of mounting conditions occurs at the FMP meter. Industry seems to misunderstand the meaning of the general statement ''modification mounting conditions'' as it pertains to an event that would require an FMP meter to be proved before removal or sales of production. Proposed § 3174.153(d) would require that an FMP meter be proved prior to removal or sales of production whenever the FMP meter is removed and reinstalled at the FMP. The BLM is proposing to simplify the existing language by saying:

''removal and reinstallation of the meter'' rather than ''modification of mounting conditions.'' This proposed change would address industry's confusion and still achieve the outcome of the proving frequency requirement.

3174.154 Excessive Meter Factor Deviation

This proposed section would expand upon the provisions currently located in existing § 3174.11(e). This rule would clarify existing language that defines excessive meter factor deviation. The existing rule considers any two successive provings where the meter factors differ by ±0.0025 or more, as excessive. There has been confusion over what is meant by ''successive.'' In an attempt to address this confusion, the term ''successive'' would be replaced by ''consecutive.''

Proposed § 3174.154(a) is a new section that is being proposed to address an omission in the existing rule. Onshore Order No. 4 allowed an operator to provide an explanation to the BLM that an excessive-meter factor was not caused by a meter malfunction. The existing regulation does not include this option and, at existing § 3174.11(e), requires the operator to remove a meter from service no matter the cause of the excessive meter factor. The BLM has received many questions about why this option was not retained in subpart 3174. The primary explanation for an excessive meter factor, other than meter malfunction, is changing conditions, such as temperature, gravity, or flow rate. The intent of the existing regulation is that a meter must be proven if any one of the conditions, temperature, pressure, gravity, or flow rate changes beyond the normal range as defined in § 3174.11(c)(1). Proposed § 3174.152(a) would refine this normal range criteria (as discussed in the § 3174.152(a) preamble section). The proposed changes to the normal condition would eliminate excessive meter-factor deviation caused by changing conditions because proposed § 3174.153(f) would require the operator to prove any FMP meter before a change in the flow rate, pressure, temperature, or gravity becomes severe enough to cause excessive meter factor deviation. The BLM is proposing to allow an operator to provide an explanation to the BLM that an excessive-meter factor was not caused by a meter malfunction because the BLM believes that it is appropriate to give operators the opportunity to explain an excessive meter factor on a case-by-case basis.

Proposed § 3174.154(b) uses language that is combined from existing § 3174.11(e)(1) and (3). This proposed section would require an operator to remove a meter from service when a meter malfunction causes an excessive meter factor or when an operator does not provide, or the AO does not approve, an explanation for the excessive meter factor. This section would also include language that requires an operator to provide a description of any meter repair or adjustment on the subsequent proving report.

Proposed § 3174.154(c) reflects existing § 3174.11(e)(2). This section would require the two consecutive meter factors to be averaged and applied to production measured between the dates of the two provings.

3174.155 Verification of the Temperature Transducer

The BLM's requirements for verifying temperature-transducer output are currently located in existing § 3174.11(f). In this proposed section, the verification requirements have not changed, but rather the language has been revised to include changes relating to the addition of the ELM section in the proposed rule. The primary changes to this section would be removing the reference to CMS and replacing it with a reference to ELM and changing all instances of ''the probe of the temperature averager'' to ''temperature transducer.''

3174.156 Verification of the Pressure Transducer (if Applicable)

This proposed section lists the requirements for verifying the pressure transducer output and would be nearly identical to the existing language in current § 3174.11(g). The BLM is not proposing any substantive change to subpart 3174's pressure transducer verification requirements.

3174.157 Density Verification (if Applicable)

This proposed section lists the requirements for verifying the density output from a Coriolis meter, and would be nearly identical to the existing language in current § 3174.11(g). The BLM is not proposing any substantive change to the density verification requirements of existing subpart 3174.

3174.158 Meter-Proving Reporting Requirements

Existing § 3174.11(i) contains meter-proving reporting requirements; however, this section does not clearly state what data operators must provide on a proving report. The existing language primarily requires operators to use proving forms that are available within two different API standards, and requires operators to provide some additional data covering lease number, meter ID number, the verification of the temperature and pressure transducers, and density verification. Proposed § 3174.158 would provide a detailed list of the specific data required and would specify a required calculation sequence to be followed in the meter factor calculation. API forms are identified only as available examples of proving-report formats.

Proposed § 3174.158(a) would retain the data requirements listed in existing § 3174.11(i)(2) and would add additional specific data that must be included on the list of minimum data required to be in a proving report. These additional data requirements would be the data that is currently found on the API forms referenced in current § 3174.11(i)(1). The BLM believes that providing this level of detail in the proposed proving-report requirements, rather than referring operators to the API example forms, would remove any confusion about the exact data that is required on the report. The proposed minimum-data list contains the data necessary for the BLM to clearly identify the FMP meter, conduct an audit, verify that proving operations obtained the correct data, and determine that meter-factor calculations are done correctly.

Proposed § 3174.158(b) would retain the data requirements listed in existing § 3174.11(i)(1), except for removing the reference to the example forms listed in the API standards. The reference to the API forms has created confusion with both industry and the BLM as to whether operators are required to use them or just provide the data within the forms in any format. Removing the reference and stating that any format would be acceptable is expected to clear up this confusion.

Proposed § 3174.158(c) would change the proving-report submission requirements of existing § 3174.11(i)(3) from requiring an operator to submit each report within 14 days after a meter proving to only requiring an operator to submit a proving report when requested by the AO. This change has been proposed to make this regulation less burdensome to industry while retaining the BLM's audit capabilities for verifying proving reports.

3174.160 Measurement Tickets

Proposed §§ 3174.160–162 would replace the measurement ticket requirements contained in existing § 3174.12. Proposed § 3174.160 provides an overview of the following two sections that require information that must appear on measurement tickets prior to oil-volume reporting on the

OGOR. The proposed rule would separate out the measurement-ticket requirements into individual sections according to the measurement type, tank gauging, and LACT or CMS. This prosed rule would retain the existing requirement that measurement tickets be made available upon request of the AO. The BLM believes this requirement is the least burdensome on industry while retaining the BLM's audit capabilities for verifying volume and quality.

3174.161 Tank Gauging Measurement Ticket

Under proposed § 3174.161, the tank-gauging measurement-ticket section would reorganize the required measurement-ticket information into two categories—one for field-data gathering operations and another for measurement-ticket calculations. There has been confusion within industry and the BLM over the existing requirements when documenting tank-gauging operations. Some BLM personnel believe a complete measurement ticket, including all temperature and density corrections and calculations, must be filled out by the operator, purchaser, or transporter at the time of the gauging operations. This proposed rule would clarify which data would be required to be documented at the time of the gauging operation in the field and what calculations could be done later.

Proposed § 3174.161(a) would replace parts of existing § 3174.12(a). This proposed section would specify the field-data gathering and documentation requirements. For field-data gathering, the proposed rule would include existing requirements from § 3174.12(a) and with the additional requirement that operators document the FMP location information as required under § 3170.50(g). Many within the BLM have been requesting that operators provide location data on their measurement tickets so they can identify the location of the FMP where the tank-gauging took place. Therefore, this proposed rule would include the location information requirement.

Proposed § 3174.161(b) would replace parts of existing § 3174.12(a). This proposed section would clarify the calculations and corrections that the operator must complete and document on the run ticket for tank gauging. The existing rule was not specific with respect to the correction of the API gravity to 60 °F, and whether it must include the glass thermal expansion equation when using a hydrometer or thermohydrometer for gravity determination. The proposed rule would require the API oil gravity at the 60 °F correction to include the glass thermal expansion equation. The proposed rule would eliminate the gross standard volume recording and proposes to require the total net standard volume be recorded. Many in industry and the BLM have questioned why net standard volume is not required to be calculated in the existing rule. This was an oversight. The existing regulation should have required operators to document it on the measurement ticket. Operators are already required to report net standard volumes on their OGORs.

3174.162 LACT System and CMS Measurement Ticket or Volume Statement

Proposed § 3174.162 would reorganize the required information into two categories—measurement tickets and volume statements. Existing § 3174.12(b) only allows the operator to use a measurement ticket while proving a LACT system. Since the proposed rule would allow operators to use ELM and MDS systems, a second category for volume statements would be necessary. The BLM believes both of these categories would provide the audit capabilities required for verifying volume and quality.

Proposed § 3174.162(a) would retain the existing measurement-ticket requirements in § 3174.12(b) and introduce two additional requirements. The proposed rule would require in § 3174.162(a)(1) the location information found in § 3170.50(g) be documented and would require in § 3174.162(a)(11) the net standard volume be calculated and documented.

Proposed § 3174.162(b) would be a new section that would accommodate the ELM systems and MDS systems. This section would allow for volume statements rather than measurement tickets for the documentation of the flow data and calculations to net standard volume. The volume statement would be generated from the ELM or MDS using unaltered, unprocessed, and unedited daily or hourly QTRs, and would require the information found in the API 21.2 standard. The volume statement would additionally be required to include the information listed in § 3170.50(g).

Proposed § 3174.162(c) would retain the existing requirements in § 3174.12(b)(2) that any accumulators used in the determination of average pressure, average temperature, and average density be reset to zero whenever a new measurement ticket is opened. It would also add the term ''measurement period'' to clarify the timeframe that would apply to this requirement.

3174.170 Oil Measurement by Other Methods

Oil measurement by other methods is currently addressed in existing § 3174.13. Most of the content of existing § 3174.13 is proposed to be moved to § 3170.30. This change would eliminate duplicate language on the process of applying for BLM approval of alternative equipment and methods through the PMT review process from subpart 3174 and relocate it to subpart 3170, which is common to all the part 3170 regulations. The existing § 3174.13(a) language about prior BLM approval has been modified and retained in proposed § 3174.170. The proposed modification would remove references to tank gauge, LACT, and CMS and instead clarify that any method of oil measurement other than those addressed in this rule or listed on the *www.blm.gov* website require BLM approval.

3174.180 Determination of Oil Volumes by Methods Other Than Measurement

This proposed section essentially reproduces existing § 3174.14. This section addresses how spilled oil, waste oil, and slop oil must be reported to the AO. Existing § 3174.14 says an operator may not sell or otherwise dispose of slop oil without prior written approval. Proposed § 3174.180 would require an operator to get prior written approval from the BLM for a sale or disposal of slop oil and also require the operator to notify the BLM via Sundry Notice of the volume sold or disposed. This change would ensure that a tracking and auditing mechanism for spilled oil, waste oil, and slop oil exists.

3174.190 Immediate Assessments

The BLM has reviewed existing immediate assessments in § 3174.15 and is proposing to remove the immediate assessment for the failure to notify the AO of a LACT system failure or equipment malfunction within 72 hours that resulted in the use of an unapproved alternative measurement method (existing § 3174.15, violation 2). There has been confusion as to whether the immediate assessment should be for a failure to notify within 72 hours of a LACT system failure or equipment malfunction, or whether it should be for the use of an unapproved alternative measurement method. Existing § 3174.7(e)(1), requiring the 72-hour notification, would be revised under proposed § 3174.90(e) so that the notification would be required within

30 days after repair of any LACT system failures or equipment malfunctions that may have resulted in measurement error, not when there is an initial failure. To be clear, there is no grace period for the use of unapproved equipment in the current or proposed rules. The use of an unapproved alternative measurement method would be covered by the immediate assessment for failure to obtain approval as required by proposed § 3174.170. There are no changes proposed for the remaining existing four immediate assessments.

4. Section-By-Section Discussion for Changes to Subpart 3175

This proposed rule would renumber and rename some of the sections in existing subpart 3175. This change is needed to reflect that this proposed rule would consolidate a number of existing sections into new sections, and add one new section and a new Appendix. The following table provides a cross-walk comparison of the proposed § 3175 numbering to the current subpart 3175 numbering. New proposed sections have ''New'' identified in the existing § 3175 column.

| Existing § 3175 | Proposed § 3175 |
|---|---|
| 3175.10 Definitions and acronyms | 3175.10 Definitions and acronyms. |
| 3175.20 General requirements | 3175.20 General requirements. |
| 3175.30 Incorporation by reference (IBR) | 3175.30 Incorporation by reference (IBR). |
| 3175.31 Specific measurement performance requirements | 3175.31 Specific measurement performance requirements. |
| 3175.40, 3175.43, 3175.44, 3175.46 through 3175.49 | 3175.40 Measurement equipment requiring BLM approval. |
| 3175.41, 3175.42, 3175.45 | 3175.41 Approved measurement equipment. |
| New | 3175.43 Data submission and notification requirements. |
| 3175.61 Grandfathering | 3175.50 Grandfathering. |
| 3175.60 Timeframes for compliance | 3175.60 Timeframes for compliance. |
| 3175.70 Measurement location | 3175.70 Measurement location. |
| 3175.80 Flange-tapped orifice plates | 3175.80 Flange-tapped orifice plate. |
| 3175.90 through 3175.94 Mechanical recorders | 3175.90 through 3175.94 Mechanical recorders. |
| 3175.100 through 3175.104 Electronic gas measurement | 3175.100 through 3175.104 Electronic gas measurement. |
| 3175.110 through 3175.121 Gas sampling and analysis | 3175.110 through 3175.121 Gas sampling and analysis. |
| 3175.125 Calculation of heating value and volume | 3175.125 Calculation of heating value and volume. |
| 3175.126 Reporting of heating value and volume | 3175.126 Reporting of heating value and volume. |
| 3175.130 through 3175.135 Transducer testing protocol (removed) | 3175.130 Requirements for GSAMPs. |
| 3175.140 through 3175.144 Flow computer software testing (removed) | 3175.140 Temporary Measurement. |
| 3175.150 Immediate assessments | 3175.150 Immediate assessments. |
| Appendix A—Atmospheric pressure | Appendix A—Atmospheric pressure. |
| New | Appendix B—Maximum time between events. |

3175.10 Definitions and Acronyms

Proposed § 3175.10 would clarify the definition of ''Beta ratio.'' In the existing regulation, ''Beta ratio'' is defined as the ''measured diameter of the orifice bore divided by the measured inside diameter of the meter tube,'' without specifying which measured diameter to use. The proposed definition would clarify that the ''reference inside diameter'' (defined in proposed § 3175.10) is required for determining the beta ratio.

This rule would relocate the definition of ''Configuration log'' to 43 CFR 3170.10, which contains definitions that are used in more than one subpart of part 3170. ''Configuration log,'' which is a list of programmable information used in electronic flow computers measuring oil or gas, is a term that is used in both subparts 3174 and 3175.

The BLM would also relocate the definition of ''Event log'' from § 3175.10 to the general definition section under 43 CFR 3170.10. The BLM is proposing this change because the term ''Event log'' is used in both subparts 3174 and 3175.

The BLM is proposing to add a new definition for meters that are used in gas-storage agreements, which affect the determination of injection and withdrawal fees. This meter would be referred to as ''Gas storage agreement measurement points'' (GSAMP). The BLM is also proposing to add new requirements for these meters (see discussion of proposed § 3175.130 later in this preamble). Under the existing regulations, meters used for gas-storage agreements are not FMPs because the definition of an FMP is limited to meters or measurement facilities that affect the determination of royalty. Because injection and withdrawal fees are not the same as royalties, the meters that are used to determine them are not FMPs by definition. Most gas-storage-agreement contracts include language that requires injection and withdrawal meters to meet the standards found in the BLM's previous gas-measurement regulations known as Onshore Order No. 5, or subsequent regulations. However, this language is not consistent from agreement to agreement and has led to uncertainty over the BLM's authority to regulate these meters, especially under the existing subpart 3175 regulations. The BLM believes that accurate measurement and proper reporting is essential to ensuring the public receives the proper fees for the use of Federal or Indian land for gas-storage purposes. The proposed requirement would help the BLM achieve this goal.

Although most gas-storage areas use depleted oil and gas reservoirs to store gas, the gas withdrawn from a gas-storage agreement may still produce some gas and, in some cases, oil that was part of the original oil and gas deposit. This is often referred to as ''native'' oil and gas. Royalty is due on native oil and gas produced from Federal or Indian leases within the gas-storage agreement, just as it would be from any Federal or Indian lease. In these situations, the meters used to measure the withdrawn gas also measure some portion of native gas and oil. The definition of GSAMP clarifies that if the withdrawn gas contains native oil or gas, the meter measuring the withdrawn gas is an FMP and not a GSAMP. As such, the meter would have to comply with all applicable subparts 3173, 3174, and 3175 requirements relating to an FMP. It would be up to the BLM to determine if the meter is measuring only gas that was injected, in which case it would be a GSAMP, or gas that contains native oil or gas, in which case it would be an FMP.

In some cases where some native gas is produced, the gas-storage agreement specifies that the royalty on a set amount of native gas is prepaid. The

meter measuring the gas in this case would be considered a GSAMP until the amount of native gas on which the pre-paid royalty is based is exceeded, at which point the meter would become an FMP.

The BLM would add a definition of ''Nonanes-plus ($C_9$+) analysis,'' a gas analysis in which gas components from methane ($C_1$) to octane ($C_8$) are split and individually measured, and components of nonanes ($C_9$) and higher are lumped into a single grouping, because the term would be added to numerous sections of the rule and may not be consistently understood by all users. The existing regulation erroneously uses the term ''Extended analysis'' in conjunction with nonanes-plus. The BLM would eliminate the term ''Extended analysis'' in the proposed rule and would clarify that nonanes-plus ($C_9$+) analysis refers to a single grouping of all components that are heavier than octane ($C_8$).

This rule would change the definition of ''Normal flowing point'' to clarify that the normal flowing points at a particular FMP are the average values of differential pressure, static pressure, and flowing temperature taken over a 1-day to 31-day time frame. The existing definition of ''Normal flowing point'' does not define the normal flow point as an average over time and is not adequate for either the agency or the public to determine these values, resulting in inconsistent use and enforcement. The proposed change would provide a clear understanding of what a normal flowing point is and how it would be determined. The BLM uses the normal flowing points when witnessing the verification of mechanical recorders and electronic gas measurement systems and when determining overall measurement uncertainty.

This rule would add definitions for ''Published inside diameter'' and ''Reference inside diameter.'' Under the existing regulation, only the inside diameter of the meter tube is referenced, without clarifying which specific inside diameter is required. This has caused confusion for both operators and the BLM with respect to which diameter should be used for a given situation as required by this subpart. The BLM is proposing to define ''published'' and ''reference'' inside diameters of meter tubes to clarify when each of the defined inside diameters would be used in flow calculations and which would be used in table references for API MPMS 14.3.2 (Table 7, 8a, and 8b) to determine the minimum required meter tube lengths. The reason for this change is to achieve consistency with requirements and calculations in API MPMS 14.3.2, which is incorporated by reference. The published inside diameter is the standard inside diameter as found in engineering handbooks. For example, the published inside diameter for 2-inch, Schedule 40 pipe is 2.067 inches. The published inside diameter is used to determine the minimum required lengths of meter tubes and placement of 19-tube bundle flow straighteners and isolating flow conditioners, if used (see 3175.80(i) and (n)). The reference inside diameter is calculated by averaging multiple inside diameter measurements taken upstream of the orifice plate and then correcting that average to a reference temperature. The reference inside diameter is used in the flow-rate equation, as required by § 3175.103 in both the existing and proposed rules, and in the grandfathered flow-rate calculations defined in proposed § 3175.50(2)(c)(i) (existing § 3175.61(b)(2)).

The BLM would improve the existing definition of ''Upper calibrated limit'' by clarifying that it is commonly referred to in the oil and gas industry as ''span.'' The term ''upper calibrated limit'' was developed during the 2013 rewrite of gas standard API MPMS 21.1 and may not be familiar to the public. The addition of a reference to ''span'' would help readers who are more familiar with this term understand the new one.

3175.20 General Requirements

Existing § 3175.20 would be modified to reflect the new section numbering of the proposed regulation. Proposed § 3175.20(b) would be added to address the additional sections on Gas storage agreement measurement points (GSAMP).

3175.30 Incorporation by Reference (IBR)

Building on existing § 3175.30, this proposed section lists 15 industry standards, reports, and manuals that are proposed for incorporation by reference, either in whole or in part.

- AGA Report No. 3, Orifice Metering of Natural Gas and Other Related Hydrocarbon Fluids; Second Edition, September, 1985 (''AGA Report No. 3 (1985)''). This report provides construction and installation requirements, and standardized implementation recommendations for the calculation of flow rate through concentric, square-edged, flange-tapped orifice meters. This standard was previously approved for IBR and is unchanged.
- AGA Transmission Measurement Committee Report No. 8, Compressibility Factors of Natural Gas and Other Related Hydrocarbon Gases; Second Edition, November 1992 (''AGA Report No. 8 (1992)''). This report presents detailed information for precise computations of compressibility factors and densities of natural gas and other hydrocarbon gases, calculation uncertainty estimations, and FORTRAN computer program listings. This standard was previously approved for IBR and is unchanged.
- AGA Transmission Measurement Committee Report No. 8, Part 1, Thermodynamic Properties of Natural Gas and Related Gases, Detail and Gross Equations of State; Third Edition, April 2017 (''AGA Report No. 8 Part 1''). The part 1 is essentially the same computations of compressibility factors and densities of natural gas and other hydrocarbon gases, calculation uncertainty estimations, and FORTRAN computer program listings as the 1992 Second edition. This report is being proposed for incorporation because the BLM believes this revised standard would allow the use of a more accurate compressibility calculation while still retaining the older calculation for situations where the new calculation is not necessary or not practical.
- AGA Transmission Measurement Committee Report No. 8, Part 2, Thermodynamic Properties of Natural Gas and Related Gases, GERG–2008 Equation of State; First Edition, April 2017 (''AGA Report No. 8 Part 2''). This part 2 introduces a new and more accurate computation known as ''GERG–2008''. This report is being proposed for incorporation because the BLM believes this new and more accurate computation known as ''GERG–2008 should be allowed under the proposed rule.
- API MPMS Chapter 14—Natural Gas Fluids Measurement, Section 1—Collecting and Handling of Natural Gas Samples for Custody Transfer; Seventh Edition, May 2016; Addendum, August 2017; Errata, August 2017 (''API 14.1''). This standard provides comprehensive guidelines for properly collecting, conditioning, and handling representative samples of natural gas that are at or above their hydrocarbon dew point. There are no substantive changes to this standard; we are proposing to add approval for the new Addendum and Errata to this standard.
- API MPMS, Chapter 14, Section 3, Orifice Metering of Natural Gas and Other Related Hydrocarbon Fluids—Concentric, Square-edged Orifice Meters, Part 1, General Equations and Uncertainty Guidelines; Fourth Edition, September 2012; Errata, July 2013 (''API 14.3.1''). This standard provides engineering equations and uncertainty

estimations for the calculation of flow rate through concentric, square-edge, flange-tapped orifice meters. This standard was previously approved for IBR and is unchanged.

• API MPMS Chapter 14, Section 3, Orifice Metering of Natural Gas and Other Related Hydrocarbon Fluids—Concentric, Square-edged Orifice Meters, Part 2, Specification and Installation Requirements; Fifth Edition, March 2016; Errata 1, March 2017; Errata 2, January 2019) (''API 14.3.2''). This standard provides construction and installation requirements, and standardized implementation recommendations for the calculation of flow rate through concentric, square-edge, flange-tapped orifice meters. There are no substantive changes to this standard; we are proposing to add approval for the new Errata to this standard.

• API MPMS Chapter 14, Section 3, Orifice Metering of Natural Gas and Other Related Hydrocarbon Fluids—Concentric, Square-edged Orifice Meters, Part 3, Natural Gas Applications; Fourth Edition, November 2013 (''API 14.3.3''). This standard is an application guide for the calculation of natural gas flow through a flange-tapped, concentric orifice meter. This standard was previously approved for IBR and is unchanged.

• API MPMS Chapter 14, Natural Gas Fluids Measurement, Section 3, Concentric, Square-Edged Orifice Meters, Part 3, Natural Gas Applications, Third Edition, August, 1992 (''API 14.3.3 (1992)''). This standard is an application guide for the calculation of natural gas flow through a flange-tapped, concentric orifice meter. This standard was previously approved for IBR and is unchanged.

• API MPMS, Chapter 14.5, Calculation of Gross Heating Value, Relative Density, Compressibility and Theoretical Hydrocarbon Liquid Content for Natural Gas Mixtures for Custody Transfer; Third Edition, January 2009; Reaffirmed February 2014 (''API 14.5''). This standard presents procedures for calculating, at base conditions from composition, the following properties of natural gas mixtures: Gross heating value, relative density (real and ideal), compressibility factor, and theoretical hydrocarbon liquid content. This standard was previously approved for IBR and is unchanged.

• API MPMS Chapter 21.1, Flow Measurement Using Electronic Metering Systems—Electronic Gas Measurement; Second Edition, February 2013 (''API 21.1''). This standard describes the minimum specifications for electronic gas measurement systems used in the measurement and recording of flow parameters of gaseous phase hydrocarbon and other related fluids for custody transfer applications utilizing industry recognized primary measurement devices. This standard was previously approved for IBR and is unchanged.

• GPA Midstream Standard 2166–17, Obtaining Natural Gas Samples for Analysis by Gas Chromatography, Reaffirmed 2017 (''GPA 2166–17''). This standard recommends procedures for obtaining samples from flowing natural gas streams that represent the compositions of the vapor phase portion of the system being analyzed. This standard is being proposed for incorporation because, since the existing regulation published in November 2016, the GPA published a revised standard, GPA 2166–17. Although there have been few changes from the 2005 standard, the BLM believes the revised version would result in gas samples that better represent the gas flowing through the FMP, which would help improve the accuracy of the heating value reported on the OGOR B. There are no substantive changes to this standard; we are proposing to add approval for the reaffirmation date of this standard.

• GPA Standard Midstream 2261–19, Analysis for Natural Gas and Similar Gaseous Mixtures by Gas Chromatography; Revised 2019 (''GPA 2261–19''). This standard establishes a method to determine the chemical composition of natural gas and similar gaseous mixtures within set ranges using a gas chromatograph (CG). There are no substantive changes to this standard; we are proposing to add approval for the new revision date of this standard.

• GPA Midstream Standard 2198–16, Selection, Preparation, Validation, Care and Storage of Natural Gas and Natural Gas Liquids Reference Standard Blends; Revised 2016 (''GPA 2198–16''). This standard establishes procedures for selecting the proper natural gas and natural gas liquids reference standards, preparing the reference standards for use, verifying the accuracy of composition as reported by the manufacturer, and the proper care and storage of those reference standards to ensure their integrity as long as they are in use. This standard is being proposed for incorporation because, since the existing regulation published in November 2016, the GPA published a revised standard, GPA 2198–16. The BLM reviewed the revised standard and determined that the changes from the previous version will help improve the accuracy, reliability, and verifiability of reference standard blends.

• PRCI Contract–NX–19, Manual for the Determination of Supercompressibility Factors for Natural Gas; December 1962 (''PRCI NX 19''). This manual presents detailed information for computations of compressibility factors and densities of natural gas and other hydrocarbon gases. This standard was previously approved for IBR and is unchanged.

The BLM is proposing to remove four industry standards that are currently incorporated by reference in existing subpart 3175.

• API MPMS Chapter 22.2—Testing Protocol, Differential Flow Measurement Devices; First Edition, August 2005; Reaffirmed August 2012 (''API 22.2''). This standard is a testing protocol for any flow meter operating on the principle of a local change in flow velocity, caused by the meter geometry, giving a corresponding change of pressure between two reference locations. API 22.2 is being proposed for removal because the regulatory language in existing § 3175.47 on the testing process, which refers to API 22.2, would be replaced with a general reference to the PMT website for all equipment that requires BLM approval in proposed § 3175.40. See the discussion of the PMT review process under § 3175.40 later in this preamble.

• GPA Standard 2166–05, Obtaining Natural Gas Samples for Analysis by Gas Chromatography; Adopted as a tentative standard, 1966; Revised and Adopted as a standard 1968; Revised 1986, 2005 (GPA 2166–05). This standard recommends procedures for obtaining samples from flowing natural gas streams that represent the compositions of the vapor phase portion of the system being analyzed. GPA 2166–05 is being proposed for removal because this standard has been replace by GPA 2166–17.

• GPA Standard 2198–03, Selection, Preparation, Validation, Care and Storage of Natural Gas and Natural Gas Liquids Reference Standard Blends; Adopted 1998; Revised 2003 (GPA 2198–03). This standard establishes procedures for selecting the proper natural gas and natural gas liquids reference standards, preparing the reference standards for use, verifying the accuracy of composition as reported by the manufacturer, and the proper care and storage of those reference standards to ensure their integrity as long as they are in use. GPA 2198–03 is being proposed for removal because this standard has been replaced by GPA 2198–16.

• GPA Standard 2286–14, ''Method for the Extended Analysis of Natural Gas and Similar Gaseous Mixtures by Temperature Program Gas Chromatography; Adopted as a standard 1995; Revised 2014 (''GPA 2286–14''). This method is intended for the compositional analysis of natural gas and similar gaseous mixtures where precise physical property data of the hexanes and heavier fractions are required. The procedure is applicable for mixtures which may contain components of nitrogen, carbon dioxide, and/or hydrocarbon compounds C1–C14. GPA 2286–14 is being proposed for removal because, since the existing regulations was published in November 2016, the BLM determined that this standard is primarily intended for laboratory use and is not applicable to the determination of gas composition in typical field applications.

3175.31 Specific Performance Requirements

Existing § 3175.31 establishes the minimum performance standards for uncertainty, bias, and verifiability. The BLM is proposing certain modifications to this section in order to clarify its requirements and facilitate the application of those requirements. Clarification of these requirements is of particular importance because this section established the minimum standards that all equipment and processes must meet for BLM approval.

Existing § 3175.31 (a) establishes flow-rate uncertainty limits for high- and very-high-volume FMPs. There are no uncertainty limits for low- and very-low-volume FMPs in the existing regulation and the BLM is not proposing to add any. The proposed rule would add a new paragraph (a)(3) to clarify that there are no uncertainty limits for low- and very-low-volume FMPs.

Proposed § 3175.31(b)(1) would increase the allowable uncertainty in average annual heating value for high-volume FMPs from 2 percent to 3 percent. For very-high-volume FMPs, the average annual heating value uncertainty would be increased from 1 percent in existing § 3175.31(b)(2) to 2 percent. The average annual heating value uncertainty is a measure of how well a 12-month average of heating values, as determined from spot samples, compares to a hypothetical 12-month average based on continuous heating value measurement. The average annual heating value uncertainty is a function of how variable the heating value from spot sample to spot sample is and how often the spot samples are taken. For an FMP that has heating values that are fairly consistent from sample to sample, it may only take two or three samples to achieve a set level of uncertainty. On the other hand, if the heating values vary considerably from sample to sample, it may take 10 or more samples to achieve the same level of uncertainty.

The BLM developed the following equation (see existing § 3175.31(b)(4)) which defines the relationship between the number of samples taken over a year (N), the average annual heating value uncertainty

$$(U_{\overline{HV}}),$$

and heating value variability from sample to sample ($V_{95\%}$).

$$N = 0.904\left(\frac{V_{95\%}}{U_{\overline{HV}}}\right)^2$$

In this equation, the number of samples required to achieve a set level of average annual heating value uncertainty changes as the square of the average annual heating value uncertainty. For example, if the heating value variability is ±4 percent and the required level of uncertainty is ±1 percent, then it would require the operator to take 15 samples per year. However, if the required level of uncertainty was increased to ±2 percent, it would reduce the required number of samples per year to four.

Since the existing rule published in November 2016, industry has expressed concern over § 3175.115(b), which requires the operator to adjust the sampling frequency of high- or very-high-volume FMPs to achieve the levels of average annual heating value uncertainty required under § 3175.31(b). By increasing the maximum level of uncertainty under the proposed rule, the maximum number of samples required per year would drop by 75 percent for very-high-volume FMPs and 56 percent for high-volume FMPs. The BLM believes that the proposed increase in average annual heating value uncertainty would alleviate much of industry's concern while still providing the BLM with an objective and performance-based method to establish spot sampling frequency. The BLM also believes the proposed uncertainty limits for average annual heating value are justified because they would match the uncertainty limits for volume determination. The BLM is specifically seeking comments on this proposed change. Both volume and heating value have equal effect on the amount of royalty due. Royalty is determined by a multiplication of the royalty rate (determined by the lease agreement), the volume (determined by a BLM compliant measurement point), the heating value (determined by a BLM approved sampling method), and the value (determined by ONRR).

In the existing regulation, the defined limits for heating value uncertainty came from the BLM Threshold Analysis. In the time period between the publication of the current regulation, it has become clear that some costs were not considered in that calculation. The possibility of increased sampling frequency would incur additional administrative costs and visits to FMP locations for operators. Many times these locations are remote, which also creates additional associated cost with the sampling. The BLM has accounted for those additional costs in the proposed heating value uncertainty limits.

Existing § 3175.31(b) establishes heating value uncertainty limits for high- and very-high-volume FMPs. There are no uncertainty limits for low- and very-low-volume FMPs in the existing regulations and the BLM is not proposing to add any. The BLM would add a new paragraph (b)(3) to the proposed rule only to clarify that there are no uncertainty limits for low- and very-low-volume FMPs.

3175.40 Measurement Equipment Requiring BLM Approval

The proposed rule would reorganize existing § 3175.40, as well as make a number of changes to the requirements. Existing § 3175.40 lists the types of equipment that are allowed for use at FMPs. Some of this equipment, including flange-tapped orifice plates (existing § 3175.41), chart recorders (existing § 3175.42, for low- and very-low-volume FMPs only), and gas chromatographs (existing § 3175.45) are automatically approved with no additional review required. Other equipment—including transducers (existing § 3175.43), flow-computer software (existing § 3175.44), flow conditioners (existing § 3175.46),

differential meters other than flange-tapped orifice plates (existing § 3175.47), linear meters (existing § 3175.48), and accounting systems (existing § 3175.49)—requires BLM approval based on a review and recommendation from the PMT. The sections for each device requiring BLM approval include some description of the required testing.

Under the proposed rule, the equipment requiring BLM approval would be grouped under revised § 3175.40 and the equipment automatically approved would be grouped under revised § 3175.41 (see discussion under § 3175.41). All discussion regarding the testing and PMT review process under existing § 3175.43 through § 3175.49 would be removed and replaced with a statement directing the reader to the PMT section of the *www.blm.gov* website. The BLM is proposing these changes in order to streamline and better organize the regulations.

As with the transducer and flow computer testing procedures (§§ 3175.130 and 3175.140, respectively), all discussion relating to the testing and review process would also be removed and placed on the PMT website. The reason for this change is to achieve consistency with subpart 3174 (oil measurement) and to allow modifications to the testing and review processes based on experience and input from operators and manufacturers. As explained in the previous discussion of proposed § 3170.30, the purpose of the PMT review process, and any associated testing procedures, will be to assess whether the proposed alternative equipment meets the minimum performance standards of subpart 3175.

Existing § 3175.48 addresses all types of linear gas meters. Under proposed § 3175.40, linear meters would be listed as Coriolis meters (§ 3175.40(e)) and ultrasonic meters (§ 3175.40(f)). The BLM is proposing this change because the BLM estimates that the majority of linear meters used for gas measurement will fall into one of these two categories. All other types of linear meters would be reviewed as ''new technology'' by the PMT. The PMT will need to develop a testing procedure for all equipment covered under § 3175.40. It would be difficult for the PMT to build a generic testing procedure for all linear meters due to the dramatic differences in technology and varied range of influence effects that such a widely diverse group of equipment would create.

The proposed rule would add new § 3175.40(g), which would address software used to capture and process output from a gas chromatograph (GC), to the list of devices that require BLM approval. The BLM is proposing to require BLM approval of this software because it is critical to the determination of heating value and relative density, both of which have a direct effect on the determination of royalty. In addition, the BLM is not aware of any industry standards that dictate how this software must function or any existing independent, third party, review of this software. Like other equipment and software requirements, the BLM would review GC software to ensure that it complies with the § 3175.31 requirements, particularly with respect to verifiability and any potential bias that a software might produce.

The raw output from a GC consists of a chromatogram, which is a graph of detector response over time. As a gas sample is run through a GC, the GC first sorts the molecules in the gas, typically by molecular weight, using a series of filters and devices known as columns. After flowing through these filters and columns, all the methane molecules, for example, are grouped together and segregated from the other molecules. Likewise, the ethane, propane, butane, and other molecules are each grouped and segregated. As the groups of segregated molecules flow out of the GC, they pass through a detector that generates a response, or ''blip,'' in relation to the size of the group of molecules. A large blip corresponds to a large concentration of that molecule in the gas sample. A software package captures this output from the GC and uses the size of the blip as well as the type of molecule to determine the concentration of each molecule in the gas sample. The BLM believes that PMT review of this software is critical to ensure the software is properly interpreting the output from the GC and accurately determining the molecular concentrations, which are ultimately used to calculate the heating value and relative density of the gas sample.

The proposed rule would add water-vapor measurement equipment and methods to the list of devices that require BLM approval. The most common water-vapor measurement devices—chilled mirrors and laser detection devices—are automatically approved under the existing regulation (see § 3175.126(a)(1)(i) and (ii)). Water vapor in a gas stream does not contribute any heating value and displaces hydrocarbon molecules, which do have heating value. As a result, water vapor reduces the heating value of gas, which in turn reduces the royalty value of the gas.

Both the existing and proposed rules allow operators to reduce the gas heating value based on measured amounts of water vapor in the gas stream. Unlike other molecules, such as carbon dioxide and nitrogen, which also reduce the heating value of a gas, water vapor is not detected using a gas chromatograph; therefore, alternate means of measuring water vapor are commonly used, such as a chilled mirror and laser detection devices.

Since the publication of the existing rule, the BLM has determined that both chilled mirrors and laser detection devices can vary in design and may have certain operating limitations that could affect the amount of water vapor they measure. For example, some laser detectors will mistake other components in the gas stream for water vapor, thereby overstating the amount of water vapor that is actually in the gas stream. Chilled mirrors also vary in design and can sometimes mistake hydrocarbons for water, which can cause errors in the measured water vapor content. By requiring PMT review and BLM approval of all water-vapor detection equipment and methods used at FMPs, the BLM can determine the accuracy of these devices and their operating limitations based on independent laboratory data. Like other equipment, the BLM would review these devices to ensure compliance with the § 3175.31 requirements, particularly with respect to any potential bias that a device might produce by falsely detecting hydrocarbons as water vapor.

The proposed rule would add § 3175.40(i), which would address measurement data systems. Under existing § 3175.49, accounting systems used to report measurement data must be approved by the BLM. Since the publication of the existing regulation, the BLM has found that the term ''accounting system'' has caused confusion among operators, who sometimes assume this includes systems that maintain financial information. The proposed rule would not only move the requirement for accounting systems to obtain BLM approval to a new section, it would also rename accounting systems to ''measurement data systems'' in order to more accurately describe these systems. Measurement data systems are designed to gather, edit, store, and report measurement data and have nothing to do with financial information. The review process would allow the BLM to confirm that the measurement data systems will adequately preserve raw data and verifiability to meet the requirements of § 3175.31.

3175.41 Approved Measurement Equipment

The proposed rule would modify § 3175.41, to place all approved measurement equipment in a single section of the regulation. This consolidation would replace the existing § 3175.40, § 3175.41, § 3175.42, § 3175.43, § 3175.44, and § 3175.45.

3175.43 Data Submission and Notification Requirements

Under proposed § 3175.43, all the notification and data submission requirements would be consolidated and listed in one place. The BLM proposes to add this section to help operators identify and track the notification and data submission requirements. This section does not impose any new notification or reporting requirements.

3175.50 Grandfathering

The BLM is proposing an expansion of the equipment that would be grandfathered in place and not require BLM approval. The BLM is proposing to revise subpart 3175's grandfathering provision, which appears in existing § 3175.61, and relocate it to § 3175.50. Under the existing regulations (§§ 3175.43, 3175.44, and 3175.46 through 3175.49), the operator can only use equipment that has been approved by the BLM, through the PMT, and then placed on the list of type-tested equipment. The implementation of this provision was delayed until January 17, 2019, under existing § 3175.60(a)(4) for equipment installed on or before January 17, 2017, and under § 3175.60(b)(2)(i) for equipment installed after January 17, 2017. The implementation of § 3175.40 was further delayed by practical necessity (see BLM Instruction Memorandum 2018–077). The proposed new grandfathering section (§ 3175.50(a)) would exempt all equipment covered by § 3175.40 in place at very-low, low, and high-volume FMPs on or before the effective date of the final revised rule from the BLM-approval requirement. Equipment at very-high-volume FMPs would not be exempt, regardless of when it was installed. The BLM is not proposing to grandfather equipment installed at very-high-volume FMPs because of the higher risk of significant mismeasurement due to the high volume of gas measured and because the revenue resulting from the high production volumes would make replacing equipment, if necessary, economically feasible.

There are three reasons that the BLM is proposing to add this grandfathering provision. First, shortly after its inception, the PMT realized that the workload of reviewing data from all existing makes, models, and sizes of equipment requiring approval under § 3175.40 would be enormous and could take years to complete, far longer than the originally projected 30- to 60-day review process. Second, operators have expressed concerns about the cost of replacing existing equipment that is not on the BLM list of approved equipment with equipment that is on the list, especially at lower-volume FMPs. Third, upon review of operator-supplied field data for some existing equipment approvals, it became clear to the PMT that such data was, in most cases, insufficient to perform statistically significant analysis. Without a controlled baseline, most data received provided little useful information about the performance of the device. The BLM understands that it is impractical for operators to remove outdated or obsolete equipment from the field and subject it to laboratory testing. The grandfathering provision of this proposed rule would balance the possible threat of uncertainty error against the imposed burden of such testing.

Based on these concerns, the BLM is proposing to grandfather all equipment installed at very-low, low-, and high-volume FMPs on or before the effective date of the new final rule. This would dramatically decrease the number of makes, models, and sizes of equipment that would be subject to review by the PMT and would assure operators that they would not have to immediately replace this equipment.

The proposed grandfathering could have some impacts on the BLM's ability to ensure accurate measurement, the absence of statistically significant bias, and verifiability, all of which are required under the performance goals in both the existing regulations and the proposed regulations. For example, for high-volume FMPs, which must comply with the uncertainty performance goals under § 3175.31(a) of the existing regulations, the grandfathering of existing transducers, flow conditioners, linear meters, and differential meters other than flange-tapped orifice plates could impact the BLM's ability to ensure accurate measurement. The current version of the BLM's uncertainty calculator, which is used to determine and enforce overall uncertainty, is based on the manufacturer's specifications for that device. It has been the BLM's experience that manufacturers develop specifications based on proprietary test procedures and test data interpretation methods that may overstate the actual field performance of their devices. By grandfathering these devices, the actual overall measurement uncertainty has the potential to be substantially greater than what is calculated using the uncertainty calculator. In contrast, those devices, which are not grandfathered, are subject to independent review and analysis by the PMT based on laboratory test data. The uncertainty and operating limitations of these devices determined by the PMT would be used in the uncertainty calculator, yielding a more realistic uncertainty calculation.

For all devices covered by existing regulations (§§ 3175.43, 3175.44, and 3175.46 through 3175.49), the lack of PMT review of laboratory data could result in devices operating outside the limits over which they were tested. This could result in these devices operating at conditions that would lead to statistically significant bias.

Notwithstanding the potential drawbacks of the proposed grandfathering, the majority of the meters affected by this proposal do not have an uncertainty requirement as part of their specific performance requirements, and compliance with the existing regulation could result in cost that would exceed a low producing or older well's income after that expense. The BLM believes the benefits of continued production outweigh the potential drawbacks and pose little risk to royalty accountability.

Proposed § 3175.50(b)(1) would clarify § 3175.61(a) of the existing regulation. Both the existing and proposed regulations grandfather certain aspects of meter tubes installed at low- and high-volume FMPs before January 17, 2017. During implementation of the existing regulations, numerous operators expressed confusion over the conditions for grandfathering, such as whether the grandfathering would still apply if they replaced the meter tube at an FMP that was in place before January 17, 2017. The wording of existing § 3175.61(a) applies the grandfathering to ''meter tubes installed at low- and high-volume FMPs before January 17, 2017. . . .'' The BLM has interpreted this to mean that the January 17, 2017, ''cut-off date'' applies to the date of the meter tube installation, not the date that the FMP was established. If the BLM had intended the latter interpretation, the wording would have been ''meter tubes at FMPs in place before January 17, 2017. . . .'' In any case, this proposed rule would clarify this requirement by adding an explicit statement that if a meter tube is replaced it no longer qualifies for grandfathering.

The current industry standards for meter tubes that would be grandfathered

under this proposed section have been in place since 1991 and are based on large amounts of laboratory testing and data analysis. The BLM believes that requiring meter tubes to comply with these standards is important for accurate and verifiable measurement. The only reason for grandfathering non-compliant meter tubes installed before January 17, 2017, was to eliminate the cost of having to replace them with meter tubes that comply with the current industry standards, recognizing that there could be some adverse impact to measurement as a result. If an operator is going to change out a meter tube anyway (due to damage or excessive wear, for example) the BLM does not believe the additional expense of replacing the existing non-compliant meter tube with one that complies with current industry standards is significant, especially considering that current industry meter-tube standards have been in effect for 26 years. When a meter tube must be replaced, the only justification for grandfathering—expense—is largely eliminated.

Proposed § 3175.50(b)(2) would expand on current § 3175.61(a) in order to make clear that the BLM will accept measured inside pipe diameters that comply with AGA Report No. 3 (1985), Section 4.3.3 (incorporated by reference, see § 3175.30) for grandfathered meter tubes covered in this subpart. The BLM recognizes that much of the grandfathered equipment will not have reference inside diameters that meet the requirements of § 3175.91(d)(7), § 3175.92(d)(2), § 3175.93(d), § 3175.101(c)(5), § 3175.102(e)(1)(iii), and therefore the BLM will allow the use of measured inside diameters that comply with AGA Report No. 3 (1985), Section 4.3.3 for flow-rate calculations.

Proposed § 3175.50(c)(2)(i) would fix two typographical errors in existing § 3175.61(b)(2). This section refers to a variable called ''xi'' in ''API 14.3.3 (1992).'' The correct variable name is ''x1'' and the reference should be API 14.3.3 (2013). Proposed § 3175.50(c)(2)(ii) keeps the current language in existing § 3175.61(b)(2), but segments the compressibility for clarity.

3175.60 Timeframes for Compliance

The proposed rule would generally require all measuring procedures and equipment to comply with the proposed requirements by the effective date of the final rule. The BLM is not proposing phase-in periods, except in the special circumstances described in paragraphs (a) through (d) of this section. Under existing regulations, measuring procedures and equipment used at high- and very-high-volume FMPs had to comply with the requirements by January 17, 2018. Measuring procedures and equipment used at low-volume FMPs had to comply with the requirements by January 17, 2019, and, for very-low-volume FMPs, compliance is required after January 17, 2020. Because all FMPs, other than very-low-volume FMPs, would already have to comply with the existing regulations by the time the final rule is published, and because most of the changes proposed under this rule would be less restrictive than those in the existing rule, the BLM did not see the need for phase-in periods, other than for the items specified in paragraphs (a) through (d) of this section.

Section 3175.60(a) would require measuring equipment and procedures installed at very-low-volume FMPs before January 17, 2017, to comply with all of the requirements of this subpart as of the effective date of the final rule.

Section 3175.60(b) would change the phase-in period for the requirement to enter gas analyses into the BLM's Gas Analysis Reporting and Verification System (GARVS) (see § 3175.120(e) and (f) of existing regulations). Under existing §§ 3175.60(a)(2) and 3175.60(b)(2)(ii), the requirement to enter gas analyses into GARVS was delayed until January 17, 2019. (Note that this requirement was effectively delayed further through Washington Office Instruction Memorandum 2018–077.) In the proposed rule, the requirement to enter gas analyses into GARVS would go into effect 90 days after the BLM provides notice that GARVS is available for use. The BLM is proposing this change because the development and testing of GARVS may take much longer than expected given the complexity of GARVS. The BLM is not proposing a specific date for this requirement to become effective due to the difficulty in estimating time frames for development of GARVS.

Section 3175.60(c) would change the phase-in period for the requirement to use only the BLM-approved equipment as specified in §§ 3175.43 and 3175.44, and §§ 3175.46 through 3175.49 of the existing regulations. Under existing regulations (see §§ 3175.60(a)(4) and 3175.60(b)(2)(iii)), the requirement for operators to use only specified equipment that has been approved by the BLM becomes effective on January 17, 2019. Under the proposed rule, this deadline would be extended to 2 years after the effective date of the final rule. The BLM has established the PMT, which is responsible for reviewing equipment and making recommendations to the BLM as to whether the equipment should be placed on the list of approved equipment. The PMT has developed the testing procedures required for PMT review and has begun to review equipment. The BLM is proposing the 2-year extension of the deadline based on the PMT's current work and estimates of the time it will take the PMT to complete an initial review of equipment likely to be submitted by operators and manufacturers.

Section 3175.60(d) would add a phase-in period for the requirement for electronic gas measurement systems to display the software version (see existing § 3175.101(b)(4)). The reason the existing regulation requires the software version to be displayed is to allow BLM inspectors to check that the software version is on the BLM list of approved equipment. However, as described previously, the requirement to use only BLM-approved equipment (including software) would not come into effect until 2 years after the effective date of the new final rule. Therefore, there is no point in requiring EGM systems to display the software version until operators are required to use only BLM-approved software versions.

The BLM is proposing to delete existing § 3175.60(c) and (d). Paragraph (c) requires operators to comply with Onshore Order No. 5 and the statewide NTLs during the phase-in periods and paragraph (d) rescinds Onshore Order No. 5 and the statewide NTLs once the phase-in periods end. If this rule is finalized as proposed, these paragraphs will not be needed. For all FMPs, the phase-in periods have ended and Onshore Order No. 5 and the statewide NTLs have been rescinded under paragraph (d).

3175.80 Flange-Tapped Orifice Plate (Primary Device)

Existing and proposed § 3175.80 define the requirements for orifice metering of gas. The proposed rule seeks to improve § 3175.80 based on feedback from BLM field offices. The introductory language in this section would be changed to reference the proposed § 3175.50 grandfathering requirements.

With proposed § 3175.80(a), the BLM would replace existing paragraph (a) (which will become § 3175.80(c) of the proposed rule) with new language that would clarify a requirement in existing Table 1 to § 3175.80. The first entry (''Fluid conditions'') in Table 1 to § 3175.80, refers to API 14.3.1, Subsection 4.1, which describes the conditions of the fluid flowing the through the meter on which the

standard is based. These conditions include:

- Single phase;
- Homogeneous;
- Newtonian; and
- With a Reynolds number of 4,000 or greater.

Because this reference in API 14.3.1 is a description of assumed fluid conditions used to develop the standard, rather than a requirement, it is unenforceable as written. Therefore, proposed § 3175.80(a)) would still refer to API 14.3.1, Subsection 4.1, but would also clarify that fluid conditions must comply with the description in API. The BLM received no comments on this issue during the promulgation of the existing regulation, but discovered the possible confusion in internal BLM discussions with field inspectors.

With proposed § 3175.80(b), the BLM would replace existing paragraph (b) (which would become § 3175.80(d) of the proposed rule) with new language that would clarify a requirement in existing Table 1 to § 3175.80. This modification would allow for greater clarity on the reference API 14.3.2, Subsection 6.2.1, and the perpendicularity requirements of the orifice plate.

Under existing § 3175.80(c), operators are required to inspect orifice plates every 2 weeks at FMPs measuring their first production or from wells that have been re-fractured. This proposed rule would remove the phrase ''if the inspection shows that'' from the existing requirement to replace the orifice plate if it does not comply with API 14.3.2, Section 4. It is the BLM's understanding that this phrase was interpreted by some operators to mean that BLM personnel attendance is necessary at each inspection. The BLM did not intend for the operator to wait on BLM personnel to perform these inspections. Under this proposed rule, the operator or their representative would inspect the orifice plate and determine if the orifice plate met the requirements.

Proposed § 3175.80(f) would modify the specific guidelines for maximum time between inspections in existing § 3175.80(d). Under this proposed rule, the BLM would move Table 1 to § 3175.115 to Appendix B of this subpart, and add a reference to Appendix B in proposed § 3175.80(f)(2). This removes the ambiguity with respect to the acceptable timeframes for compliance for this subpart. See discussion under Appendix B.

Proposed § 3175.80(j) would add an initial basic meter-tube inspection that would require operators to perform a basic meter-tube inspection within 1 year after installation of a very-high-volume FMP and within 2 years after installation of a high-volume FMP. This requirement would only apply to FMPs installed after the effective date of the new final rule. The BLM is proposing this requirement in order to help offset potential meter-tube measurement issues caused by well start-up that could go undetected due to the longer time between routine basic meter-tube inspections proposed under § 3175.80(k). If a meter is subject to pitting, buildup of foreign substances, or obstructions, these issues will typically show up early in the life of the meter. During the basic meter-tube inspections that the BLM has witnessed up to the development of this proposed rule, BLM inspectors have discovered a high probability of loose material collecting in the flow line, partially blocking flow conditioners and orifice plates. The initial meter-tube inspection would allow operators to catch and resolve these problems before reverting to the routine basic meter-tube inspection frequencies proposed in § 3175.80(k).

Proposed § 3175.80(k) would change the basic meter-tube inspection frequencies from those required under existing § 3175.80(h). Currently, operators must perform a basic meter-tube inspection every year at very-high-volume FMPs, every 2 years at high-volume FMPs, and every 5 years at low-volume FMPs. Very-low-volume FMPs are exempt from basic meter-tube inspections. Industry has expressed concern about the cost associated with performing a basic meter-tube inspection at this frequency and the lost production that occurs when shutting down a meter to inspect the meter tube. Based on these concerns, the BLM re-examined the required inspection frequency and determined that in most cases, the BLM could achieve roughly the same confidence of meter-tube condition with fewer inspections. Under the proposed rule, operators would have to perform a basic meter-tube inspection every 5 years at both high- and very-high-volume FMPs, and every 10 years at low-volume FMPs. Very-low-volume FMPs would continue to be exempt. The BLM would also add a requirement for an initial basic meter-tube inspection for high- and very-high-volume FMPs (see discussion under proposed § 3175.80(j)) and would change the name of the basic meter-tube inspection to ''routine'' basic meter-tube inspection.

Based on industry experience, meter-tube problems, such as pitting and buildup of foreign substances, are more likely to happen at lower-volume meters. High-volume meters tend to have high enough gas velocity through the meter that corrosive substances, which can cause pitting, such as standing water, cannot collect in the meter tube. Foreign substances, such as sludge and scale, also are less likely to accumulate where gas velocity is high. Although low-volume FMPs are more likely to have pitting and sludge buildup, the lower volume makes any potential mis-measurement less significant. The BLM believes the proposed routine basic meter-tube inspection frequency strikes a balance between economic burden on the operator and mitigating the risk of lost royalty.

The BLM is proposing a number of changes in § 3175.80(k)(3) based on industry concerns. Under existing § 3175.80(i)(1)(i), the operator must clean the meter tube on a low-volume FMP if the basic meter-tube inspection shows pitting, obstructions, or a buildup of foreign substances. For high- and very-high-volume FMPs, the operator must perform a detailed meter-tube inspection under existing § 3175.80(i)(1)(ii) and make any necessary measurements to determine if the meter complies with API 14.3.2, Subsections 5.1 through 5.4 and API 14.3.2, Subsection 6.2, or the requirements under existing § 3175.61(a), if the meter tube is grandfathered under existing § 3175.61(a). This typically involves removing the meter tube and measuring the inside diameter at multiple points with a micrometer. It also involves determining the surface roughness of the inside surface of the meter tube. A detailed meter-tube inspection can be costly.

Industry has expressed two concerns specific to these requirements during outreach conducted after the release of the 2016 rule. First, industry pointed out that if an operator performs a basic meter-tube inspection on a low-volume FMP and the only identified problem is pitting, the operator is required to clean the meter tube under existing § 3175.80(i)(1)(i). However, cleaning the meter tube will not resolve pitting issues and therefore provides no value. Second, if an operator performs a basic meter-tube inspection on a high- or very-high-volume FMP and the only identified problem is an obstruction, such as debris in front of the orifice plate or flow conditioner, the problem can be easily resolved by removing the debris. As long as there were no other issues identified during the basic meter-tube inspection, performing a detailed inspection under existing § 3175.80(i)(1)(ii) would provide no value and the removal of the obstruction would return the meter to normal

service, which is the overall goal of the meter inspection.

The BLM agrees with these concerns and is proposing to make a number of changes to the basic meter-tube inspection requirements to address them. Under proposed § 3175.80(k)(3), paragraphs (i) through (iii) would be added to identify a required course of action based on the results of the basic meter-tube inspection. If the only issue identified on a high- or very-high-volume FMP is an obstruction, proposed paragraph (i) would only require the operator to remove the obstruction; a detailed inspection would no longer be required. Proposed paragraph (ii) would only require the operator to clean the meter tube at low-volume FMPs if the basic meter-tube inspection identified a buildup of foreign substances. If the basic meter-tube inspection at a high- or very-high-volume FMP revealed pitting or a buildup of foreign substances, then the operator would have to perform a detailed meter-tube inspection. Proposed paragraph (iii) would require a detailed meter-tube inspection if the basic meter-tube inspection revealed pitting or the build-up of foreign substances at a high- or very-high-volume FMP. Proposed paragraph (iii) is essentially the same as the current requirement in existing § 3175.80(i). New paragraph (iv) of proposed § 3175.80(k)(3) would allow the operator to submit an extension request to perform a detailed meter-tube inspection, which is essentially the same as existing § 3175.80(i)(1)(iii).

Proposed § 3175.80(k)(7) would modify the language of the existing regulation to set new timelines for initial and routine basic inspections. This would reduce the frequency of routine basic inspections and add a category for initial inspections.

Under proposed § 3175.80(l)(2), the BLM would modify the requirement in existing § 3175.80(i)(2) regarding documentation of detailed meter-tube inspections at FMPs installed after January 17, 2017. The existing regulation requires the documentation to show that the meter tube complies with API 14.3.2, Subsections 5.1 through 5.4; however, it does not reference API 14.3.2, Subsection 6.2 which is referenced under existing § 3175.80(i)(1)(ii). This omission was an oversight in the writing of the current regulation and the BLM is therefore proposing to add the reference to the corresponding section of the proposed rule.

Under proposed § 3175.80(p), the BLM would move the requirements for the sampling-probe location in the meter tube. All three of these requirements are listed in existing § 3175.112(b). These requirements include locating the sample probe:

- At the first obstruction downstream of the primary device;
- At least five pipe diameters downstream of the primary device; and
- Vertically in a horizontal section of pipe (through a reference to API MPMS 14.1, Subsection 6.4.2).

The BLM proposes to move these requirements from existing § 3175.112(b) to proposed § 3175.80(p) in order to consolidate all meter-tube construction requirements under one section. The sample probe is generally considered to be part of the meter tube because having the sample probe too close to the orifice plate could reduce the accuracy of the meter. In addition, the BLM inspects the sample probe location as part of an inspection of the meter tube. In proposed § 3175.112(b)(1), the BLM would remove the restatement of the sample probe requirements and replace it with a cross reference to § 3175.80(p).

The proposed section would also address exceptions for vertical meter tubes, which are not addressed in the existing regulations. Under the existing regulations, the requirement to mount the sample probe vertically in a horizontal section of pipe would effectively prohibit vertical meter tubes. For vertical meter tubes, the only way to comply with this requirement would be to install the sample probe after an elbow downstream of the primary device. However, the elbow would then become the first obstruction and the installation would no longer comply with the requirement that the sample probe must be the first obstruction downstream of the primary device.

During the implementation of the existing regulation, the BLM has heard concerns from numerous operators that have vertical meter tubes. Vertical meter tubes are not prohibited under industry standards such as API MPMS 14.3.2 and, in some situations, can have advantages over horizontal meter tubes. The BLM believes that the failure to address vertical meter tubes in the existing regulations was an oversight that this proposed rule would fix.

3175.91 Installation and Operation of Mechanical Recorders

Existing and proposed § 3175.91 defines the installation and operation requirements for mechanical recorders. The proposed rule would clarify parts of the requirements for the connection of mechanical recording devices as well as the on-site information requirements.

Proposed § 3175.91(a)(1) would revise the language in the existing regulation in order to separate the guidelines for gauge lines and manifold valves. The change would dedicate § 3175.91(a)(1) to gauge lines and create a new section for valves and manifolds, § 3175.91(a)(2).

Proposed § 3175.91(a)(2) would revise the language in the existing regulation to specify that valves, including those in manifolds, would have to have full opening internal diameters of not less than ⅜ inch. The existing rule requires gauge lines, ports, and valves to have a nominal diameter of not less than ⅜ inch. This rule would clarify this language because the term ''nominal'' is not typically associated with ports and valves. Instead, ports and valves are typically defined by their full-opening bore size. The term ''nominal,'' as used with tubing, means that the outside diameter is approximately ⅜ inch, but the inside diameter can vary based on the wall thickness. Most ⅜-inch nominal tubing used for gauge lines has an inside diameter of 0.305 inches. The BLM changed the wording for gauge lines from ⅜-inch inside diameter in the October 2015 proposed rule to ⅜-inch nominal diameter in the final rule due to comments that stated operators have historically used ⅜-inch nominal tubing for the gauge lines and that requiring the tubing to have an internal diameter of ⅜ inch would require replacement of virtually all gauge lines, which would be cost prohibitive. The requirement for ⅜-inch gauge lines, ports, and valves originated from API 14.3.2, Subsection 5.4.3, which recommends that flange taps have a minimum ⅜ inch internal diameter and that gauge lines not include sudden changes in inside diameter. By separating the requirements for gauge lines and valves and manifolds the BLM can use the term ''nominal'' for gauge lines, to address operator concerns, without creating a potential issue or confusion about the requirements as they relate to bore sizing for valves and manifolds.

Proposed § 3175.91(d)(6) would change the wording from ''Meter elevation'' to ''Elevation of or atmospheric pressure at the FMP'' for on-site data required for mechanical recorders. This would allow either the FMP elevation or the atmospheric pressure at the FMP to be indicated on site. This rule proposes to allow atmospheric pressure to be posted at the FMP instead of meter elevation because either value will allow the BLM to verify the flow computer is properly programmed. Atmospheric pressure tends to be more readily available to operators and the BLM will be able to verify the atmospheric pressure during

an inspection. The atmospheric pressure can influence the flow rate calculation in two ways. If the recorder is using a gauge-pressure chart, then the operator must add the value of the atmospheric pressure to the pressure reading from the chart to calculate flow rate. If the recorder is using an absolute pressure chart, then the operator must know the value of atmospheric pressure when the pen offset is verified or calibrated. In either case, if the wrong value of atmospheric pressure is used, the flow-rate calculation will be in error. The lower the gas pressure at the FMP, the more significant the error becomes. If the atmospheric pressure is posted on site, then the BLM can verify that pressure—at least to some degree—by using GPS elevation or the elevation listed on the APD, and cross-reference that elevation to the table in Appendix A of the rule.

Proposed § 3175.91(d)(7) would require the reference inside diameter of the meter tube to be maintained at the FMP. As discussed in the discussion of § 3175.10 earlier, the reference inside diameter is required for proper flow rate calculation. Under § 3175.91(d)(7) of the existing regulations, only the inside diameter of the meter tube is required to be on site, but it is not clear which specific inside diameter is required. As the intent of the on-site information is to verify accurate gas measurement, the reference inside diameter of the meter tube would be required on site to verify its use in flow rate calculations.

3175.92 Verification and Calibration of Mechanical Recorders

Existing and proposed § 3175.92 define the verification and calibration requirements for mechanical recorders.

Proposed § 3175.92(b)(1) would add language to specify the equipment covered by this requirement and clarify that the timeframes referred to in Table 1 are in months. Proposed § 3175.92(b)(2) would clarify the timeframe requirements of Table 1 of this subpart, and add a reference to Appendix B in § 3175.92(b)(2). See the discussion of Appendix B, later.

Proposed § 3175.92(b)(3) would delay routine verification for an FMP in non-flowing status. This section would require the verification to be conducted within 15 days after the flow is re-initiated. Under this section, non-flowing status means at least 3 months of non-flow, and does not include intermittently flowing on a weekly or daily basis. The existing regulations do not address FMPs in non-flowing status and requires operators to continue to perform routine verifications on them even if they have been shut in since the last verification. The BLM is proposing this change based on industry concern and that there is no public benefit to requiring routine verifications when an FMP is shut in for a long period of time.

Proposed § 3175.92(d)(2) would require the operator to document the reference inside diameter of the meter tube. As discussed previously, the reference inside diameter is required for proper flow-rate calculation. The existing regulations require the inside diameter of the meter tube to be documented on site, but it is not clear which specific inside diameter is required. As the purpose of requiring the information is to verify accurate gas measurement, the BLM is proposing to clarify that it is the reference inside diameter of the meter tube that is required on the verification documentation.

Proposed § 3175.92(e)(1) would change the amount of time an operator has to notify the BLM prior to performing a verification after installation or following a repair. This rule would change the timeframe to 1 business day. The existing regulation requires a minimum of a 72-hour notice prior to performing the verification. The original 72-hour requirement does not allow for sudden changes in scheduling due to unforeseen field conditions. The change to 1 business day would allow operators to provide a more accurate notification to the BLM.

Proposed § 3175.92(e)(2) would modify the wording in the time frame for notifying the BLM of a routine verification. Under existing § 3175.92(e)(2), operators must notify the AO at least 72 hours before performing a verification or submit a monthly or quarterly schedule of verifications. Industry has expressed concern regarding the logistics of scheduling verifications, which can be difficult even 72 hours in advance. The purpose of this requirement is to give the BLM some idea of when verifications occur in order to schedule the witnessing of the verification. After considering the industry concerns, the BLM is proposing to modify the requirement to allow operators to either provide at least 72-hours' notice to the AO or submit a list of FMPs that the operator plans to verify over the next month or next quarter. The operator would no longer have to notify the BLM or submit a schedule of when each FMP would be verified. This list would show all verifications planned for that month or quarter, but not the specific day for each location. The BLM believes the list of wells an operator intends to verify provides enough information to prioritize which verifications the BLM should witness. The BLM would then contact the operator to determine exactly when the operator would verify a given FMP.

Proposed § 3175.92(f) would clarify the threshold that triggers the requirement to submit amended OGOR and royalty reports to ONRR. Under existing § 3175.92(f) amended reports are required if the verification error is greater than 2 percent or 2 Mcf/day, whichever is greater. The intent of this requirement in the existing regulations is not to require amended reports for an error of 2 Mcf/day or less, regardless of the error expressed as a percentage of the average flow rate. Although the current wording is technically correct, it has caused confusion. Therefore, the BLM is proposing to change the wording to read ''. . . if the verification error is greater than 2 percent and 2 Mcf/day. . . .'' As with the current wording, the error would have to meet both thresholds in order to trigger the submission of amended reports.

3175.93 Integration Statements

Existing and proposed § 3175.93 contain the documentation requirements for integration statements. Proposed § 3175.93(d) would require the reference inside diameter of the meter tube to be documented on the integration statement. As discussed previously, the reference inside diameter is required for proper flow-rate calculation. The existing regulations require the inside diameter of the meter tube to be documented on site, but it is not clear which specific inside diameter is required. As the purpose of requiring the information is to verify accurate gas measurement, the BLM is proposing to clarify that it is the reference inside diameter of the meter tube that is required.

3175.100 Electronic Gas Measurement (Secondary and Tertiary Devices)

Existing and proposed § 3175.100 provide an overview of the regulatory requirements of EGM systems based on FMP tier. Proposed Table 1 to proposed § 3175.100, would change the frequency of routine verifications for high- and very-high-volume FMPs to every 6 months for both tiers. The existing regulation requires routine verifications at a 3-month frequency for both tiers. The BLM requires routine verifications because all devices, including the transducers used in EGM systems, tend to drift, or lose their accuracy over time. In a verification, the reading of the transducer is compared to the reading of a certified pressure or temperature device. If the reading is outside the allowable tolerances defined in existing

§ 3175.102(c)(6), then the transducer must be adjusted, or calibrated, to match the reading from the certified pressure device. The BLM is proposing to reduce the frequency of verification because it has been the BLM's experience, through witnessing the verification of EGM systems that transducers rarely drift outside of the allowable tolerance. The BLM believes that most transducers in use today are stable enough that the verification frequency can be reduced to every 6 months without adding significant risk to measurement. In addition, the BLM believes that the human interaction with the transducers and flow computer during a verification can introduce greater error and uncertainty than leaving them alone. The BLM seeks comments on this proposed change.

3175.101 Installation and Operation of Electronic Gas Measurement Systems

Existing and proposed § 3175.101 define the installation and operation requirements of EGM systems. The proposed rule would clarify parts of the requirements for the connection of EGM devices and modify the on-site information requirements.

Under § 3175.101(a) of the proposed rule, the BLM would establish requirements specific to gauge lines. While the revised requirements would not change from those in existing § 3175.101(a), the section would be re-organized to separate out requirements that are specific to gauge lines and requirements that are specific to manifold ports and valves (see proposed § 3175.101(a)(2)). The requirements for both gauge lines and manifold ports and valves are combined under existing § 3175.101(a), which has caused some confusion, especially relating to required minimum diameters. The proposed rule would also clarify that the gauge-line requirements are only applicable if gauge lines are used. At many EGM system installations, the manifold and transducers are placed directly on top of the pressure taps without using gauge lines. This reduces costs and may provide better measurement than using gauge lines to connect the pressure taps, manifold, and transducers. The existing rule resulted in some confusion as to what applies when gauge lines are not used.

Proposed § 3175.101(a)(2) would revise the language in the existing regulation to specify that valves, including those in manifolds, would have full opening internal diameters of not less than ⅜ inch. See the previous discussion of proposed § 3175.91(a)(2).

Proposed new § 3175.101(b)(4) would modify the existing requirement that operators display the software version at the FMP location. The proposed language would limit that requirement to high- and very-high volume FMPs. This would avoid forcing many existing locations to update equipment to meet the regulation. The BLM feels that the current requirement imposes an undue burden on operators while generating little benefit to royalty accountability.

Proposed new § 3175.101(b)(6) would modify a provision in § 3175.101(b)(5) of the existing regulation that requires operators to either display previous-period averages for differential pressure, static pressure, and temperature, or post a QTR on-site that is no more than 31 days old. A QTR includes average values of differential pressure, static pressure, and temperature for the month. The purpose of this requirement is twofold. First, when performing an on-site inspection, BLM inspectors need to know the previous period average differential pressure, static pressure, and flowing temperature to determine if the meter is operating within the volume uncertainty limits defined in § 3175.31(a) of both the proposed and existing regulations. Second, when witnessing a meter verification, BLM inspectors need to know the averages to ensure that operators test the differential pressure, static pressure, and temperature transducers at those average values. Operators use the results of verifications at these average values to determine if they will have to submit amended reports as required under § 3175.102(g).

During implementation of the existing regulations, industry has found that many of their flow computers are not capable of displaying previous-period averages and that they must post the most recent QTRs at these locations. Industry has expressed concerns about the expense and logistical difficulties of posting a new QTR every month at every location where the flow computer is not capable of displaying the average values automatically. For locations that are not inside a meter house, the QTR must also be weather resistant which increases the time and expense of compliance. The BLM has also heard complaints that because the BLM inspects only a small percentage of FMPs every year, most of the time the BLM does not use the QTRs posted on site.

After consideration of these concerns, the BLM is proposing a modification to the QTR posting requirement in the existing regulations. Instead of requiring operators to post recent QTRs at every location that does not have a flow computer capable of displaying the required average values, the BLM would require operators to submit the most recent QTR when the BLM requests it. The operator could submit the QTR through email or fax prior to the BLM going out to inspect the facility. The BLM believes this change would not affect its inspections because the inspectors would still have access to the average values needed for transducer verifications and uncertainty determination.

Proposed § 3175.101(c)(3) would change ''Elevation of the FMP'' to ''Elevation of or atmospheric pressure at the FMP'' in the list of data that must be maintained on site for EGM systems. This would allow for operators to provide either the FMP elevation or the atmospheric pressure at the FMP. The BLM is proposing to allow atmospheric pressure to be posted at the FMP instead of meter elevation because either value will allow the BLM to verify the flow computer. Atmospheric pressure tends to be more readily available to operators and the BLM will be able to verify the atmospheric pressure during an inspection. The atmospheric pressure can influence the flow-rate calculation in two ways. If the meter is using a gauge-pressure transducer, then the flow computer must add the value of the atmospheric pressure programmed into it to the pressure reading from the transducer to calculate flow rate. If the meter is using an absolute pressure transducer, then the operator must know the value of atmospheric pressure when the transducer is verified or calibrated. In either case, if the wrong value of atmospheric pressure is used, the flow-rate calculation will be in error. The lower the pressure at the FMP, the more significant the error becomes. If the atmospheric pressure is posted on site, then the BLM can verify that pressure—at least to some degree—by using GPS elevation or the elevation listed on the APD, and cross-reference that elevation to the table in Appendix A of the existing rule.

Proposed § 3175.101(c)(5) would require the reference inside diameter of the meter tube to be maintained at the FMP. As discussed earlier, the reference inside diameter is required for proper flow-rate calculation. The existing regulations require the inside diameter of the meter tube to be documented on site, but it is not clear which specific inside diameter is required. As the purpose of requiring the information is to verify accurate gas measurement, the BLM is proposing to clarify that it is the reference inside diameter of the meter tube that is required.

Proposed § 3175.101(c)(12) would clarify the requirement to maintain on site the date of the last primary-device

inspection. The current wording has caused confusion because operators are not sure whether they are supposed to post the last orifice-plate inspection date or the last meter-tube inspection date, since both of these are considered part of the primary device under the definition in § 3175.10. The intent of the requirement was to post the last orifice-plate inspection date. The proposed rule would clarify that this requirement is specific to the orifice plate, or other primary device approved by the BLM.

Proposed § 3175.101(c)(13) would add a requirement that the operator post the last meter-tube inspection date. The BLM is proposing to add this requirement in order to allow BLM inspectors to verify that the operator is inspecting the meter tube at the frequency required under proposed § 3175.80(l) and (m). The operator would post either the last basic meter-tube inspection date or the last detailed meter-tube inspection date, whichever is more recent.

3175.102 Verification and Calibration of Electronic Gas Measurement Systems

Existing and proposed § 3175.102 define the verification and calibration requirements for EGM systems. The proposed update would modify and clarify this section, with a particular focus on the methods used to determine atmospheric pressure, verification frequency, stability and drift, reporting requirements. The proposed rule would also address confusion with respect to notification requirements.

Proposed § 3175.102(a)(3) would change the required accuracy of barometers used in the verification of absolute-pressure transducers from ±0.05 psi to ±0.06 psi (±4 millibars). Under both the proposed and existing regulation, operators have the option to use a barometer when verifying the ''zero'' reading of absolute-pressure transducers. With this option, the operator would first vent the transducer to the atmosphere, take a barometric pressure reading from the barometer, and then calibrate the transducer to read the same as the barometer. This option in not available for gauge-pressure transducers. Because this option requires input from a barometer, the uncertainty of the barometer will affect the overall uncertainty of the measurement. Most barometers that are traceable to the National Institute of Standards and Technology have an uncertainty of ±4 millibars, which is equivalent to about ±0.06 psi. Barometers that have lower uncertainties are more expensive and more difficult to find. The BLM believes changing the uncertainty requirement to ±0.06 psi would make compliant barometers more accessible without adding significant uncertainty to the overall measurement.

Proposed new § 3175.102(b)(1)(ii) would add a new maximum allowable time in days between any two routine EGM system verifications by referencing Appendix B. See the discussion of Appendix B later.

New § 3175.102(b)(1)(iii) would add language to the routine verification frequency requirements that would exempt an FMP in non-flowing status from routine verifications. The new language would instead require that the verification be conducted within 15 days after the flow resumes. See the previous discussion of § 3175.92(b)(3).

The BLM is proposing to remove the requirement of existing § 3175.102(c)(3) that the operator replace any transducer that is found to have exceeded its specification for stability or drift on two consecutive verifications. Note that the BLM believes the terms ''stability'' and ''drift'' are synonymous. When existing § 3175.130 was originally proposed in October 2015, the BLM would have required that operators perform a long-term stability test for transducers as part of the BLM's transducer approval process. The BLM found that the manufacturer's specifications for stability or drift were not well defined, not consistently interpreted, and that the manufacturers did not reveal their methods for determining this specification. The BLM ultimately removed this proposed requirement at the final rule stage, due to the cost of performing this test. The BLM included § 3175.102(c)(3) in the final (existing) rule as an attempt to verify and enforce the manufacturer's specifications for stability or drift, in lieu of requiring a test for stability or drift.

The BLM is proposing to delete this requirement because there is currently no practical way for the BLM to determine how much of the error determined during a transducer verification is due to stability or drift. When an operator verifies a transducer, the only data derived from the verification is the difference between the reading from the certified test device and the reading from the transducer. The error could be due to a number of factors, such as transducer uncertainty, ambient temperature effects, static pressure effects (for differential pressure transducers), or human errors made during the previous calibration. The only way to determine stability or drift from the verification is to back out all the other causes, which would require a complex series of calculations and a number of assumptions, which exceeds the BLM's current capacity.

Proposed § 3175.101(e)(1)(iii) would require the reference inside diameter of the meter tube to be documented. As discussed earlier, the reference inside diameter is required for proper flow-rate calculation. The existing regulations require the inside diameter of the meter tube to be documented on site, but it is not clear which specific inside diameter is required. As the purpose of requiring the information is to verify accurate gas measurement, the BLM is proposing to clarify that it is the reference inside diameter of the meter tube that is required.

Proposed § 3175.102(f)(1) would change the amount of time an operator has to notify the BLM prior to performing a verification after installation or following a repair. The BLM would change the timeframe for notification from a minimum of 72 hours to 1 business day. The original 72-hour requirement does not allow for sudden changes in scheduling due to unforeseen field conditions. The change to 1 business day would allow operators to provide a more accurate notification to the BLM.

Proposed § 3175.102(f)(2) would modify the wording in the existing regulation to address industry concerns related to providing advance notice to the AO. See the earlier discussion of § 3175.92(e)(2). Under § 3175.102(f)(2) of the existing and proposed rule, operators must notify the AO at least 72 hours before performing a verification or submit a monthly or quarterly schedule of verifications. The proposed rule clarifies that the verification schedule need only identify the FMPs that will be verified during the month or quarter, rather than the date of each verification.

Proposed § 3175.102(g) would clarify the threshold that triggers the requirement for operators to submit amended OGOR and royalty reports to ONRR. Under § 3175.102(g) of the existing regulation, amended reports are required if the verification error is greater than 2 percent or 2 Mcf/day, whichever is greater. Proposed § 3175.102(g) clarifies the BLM's intent not to require amended reports for an error of 2 Mcf/day or less, regardless of the error expressed as a percentage of the average flow rate. See the previous discussion of § 3175.92(f).

3175.103 Flow Rate, Volume, and Average Value Calculation

Existing and proposed § 3175.103 provides the minimum requirements for performing flow-rate, volume, and average-value calculations. The proposed rule would simplify some of

the language in this section to reduce confusion. Proposed § 3175.103(b) would require that the atmospheric pressure used to convert static pressure expressed in units of pounds per square inch gauge (psig) to units of pounds per square inch absolute (psia) must be determined using Appendix A of subpart 3175. The existing regulation requires the use of API 21.1, Annex B for the psig-to-psia conversion. Appendix A of subpart 3175 contains the same information as API 21.1, Annex B and does not require using secondary source material. This change to the rule would also be consistent with proposed § 3175.94(b) and other sections of this rule that require the use of atmospheric pressure.

3175.104 Logs and Records

Existing § 3175.104 defines the requirements for records and logs. The current regulation was found to be problematic and impose requirements that are beyond the capabilities of many flow computers currently in operation. The proposed regulation would modify the existing regulation to allow for the use of existing equipment while preserving accountability requirements.

Proposed § 3175.104(a)(2) would modify the existing regulation by changing the phrase ''decimal places'' with the phrase ''significant digits,'' as it relates to QTRs. The existing regulation requires the volume, flow time, and integral value or average extension to be reported to 5 decimal places and the average differential pressure, static pressure, and temperature to be reported to 3 decimal places. Industry has expressed concern that 5 decimal places can be impossible to achieve when dealing with large numbers. For example, reporting a volume of 1224.65219 Mcf of gas (5 decimal places) would exceed the number of significant digits stored in the flow computer or the measurement data system.

The BLM acknowledges these concerns and is proposing to require volume, flow time, and integral value or average extension to be reported to 5 significant digits and the average differential pressure, static pressure, and temperature to be reported to 3 significant digits. When the existing regulation was proposed in October of 2015, it would have required ''significant digits.'' However, the BLM changed the language to ''decimal places'' in the final rule based on comments stating that reporting to a specified number of significant digits would be unworkable. This solution resulted in unintended consequences that might require many operators to modify or replace existing gas measurement systems. The goal of specifying the number of significant digits is to ensure the data provides enough resolution for the BLM to perform meaningful recalculations of the volume reported on the QTR. Further research into the issue shows that ''significant digits'' provides a more workable approach than ''decimal places.'' The BLM is seeking comment on this proposed change, and requests data to support the use of one term over the other.

3175.112 Sampling Probe and Tubing

Existing § 3175.112 contains the requirements for sample probes, tubing, and components of the sampling system. The proposed rule would clarify these requirements, specifically as they relate to material of components.

Proposed § 3175.112(c)(4) retains the prohibition on membranes, screens, or filters at any point in the sample probe. The BLM received several comments objecting to this prohibition in the current rule, but no data has been submitted to support the use of such devices. The BLM requests comments and data on this subject.

Proposed § 3175.112(d) would modify the language in the existing regulation to clarify the types of materials that could be used in gas sampling-system components. The existing regulation requires that sample tubing connecting the sample probe to the sample container or analyzer be made out of stainless steel or nylon 11. Operators have expressed confusion over whether other components of the sampling system, such as valves and nipples, must also be constructed of specific materials. The BLM agrees that the wording is not clear for components other than the sample tubing and is proposing to clarify that the material requirement applies to any component of the sampling system into which gas flows during the sample process. The goal of the requirement is to prevent alteration of the gas sample due to contact with materials such as carbon steel or aluminum. These and other materials can react with and contaminate the gas. The new wording of this requirement would also clarify that only components that have gas flow through or into them must be constructed of stainless steel or nylon 11. The requirement to use stainless steel or nylon 11 is based on API MPMS 14.1 and GPA 2166–17.

3175.113 Spot Samples—General Requirements

Existing § 3175.113 establishes the general requirements for spot sampling. The proposed rule would improve and clarify these requirements, specifically as they relate to non-flowing status, sampling notification, cylinder cleaning requirements, and the use of portable GC for spot sampling.

Proposed § 3175.113(a)(1) would modify the wording of existing § 3175.113(a) to clarify that the FMP must be flowing when a gas sample is taken. The existing regulation implies this, but is not clear. The BLM is proposing this change because the current wording of the standard makes it difficult for the BLM to enforce this implied requirement when witnessing an operator taking a gas sample. A gas sample taken from a non-flowing meter is not representative of the gas flowing through the meter because a static gas volume can stratify based on the different densities of the components in the gas and the composition and heating value determined from a stratified gas volume will depend on where in the stratified column the sample was taken.

Proposed § 3175.113(a)(2) would modify the wording of existing § 3175.113(a) to clarify what is meant by a ''non-flowing status'' at the time of sampling. This change is proposed in response to some operators interpreting the existing requirement to mean that any time an FMP is shut in, they had to take a sample within 15 days. For plunger lift and other intermittent-flowing FMPs, this would be unworkable.

The existing requirement was intended to apply to FMPs that were shut in seasonally or for long periods, not to intermittently flowing FMPs. For example, a low-volume FMP requires a sample every 6 months, not to exceed 195 days between the samples. If an operator takes a gas sample at a low-volume FMP on February 1, 2019, the next sample would be due no later than August 15, 2019. If the operator shut its wells in from June 1 to September 1, it would not be able to take the next sample by August 15, 2019, as required, because the well would not be flowing and proposed § 3175.113(a)(1) requires FMPs to be flowing when a sample is taken. The intent of proposed § 3175.113(a)(2) is to clarify that if the FMP is in non-flowing status when the sample is due, the operator has 15 days from the day flow is re-initiated to take a sample. In the earlier example, assuming the wells flowing through the FMP were brought back on line on September 1, 2019, the operator would have until September 15, 2019, to take a sample.

Under existing § 3175.113(b), operators must notify the AO at least 72 hours before taking a sample or submit

a monthly or quarterly schedule of spot samples. Industry has expressed concern regarding the logistics of scheduling gas samples, which can be difficult even 72 hours in advance. The purpose of this requirement is to give the BLM some idea of when gas samples are taken in order for the BLM to be able to witness the sampling. After considering industry concerns, the BLM is proposing to modify this requirement to allow operators to submit a list of FMPs that the operator plans to sample over the next month or next quarter. The operator would no longer have to notify the BLM or submit a schedule of when each FMP would be sampled. The BLM believes the list of wells an operator intends to sample would provide enough information to prioritize which gas samplings the BLM should witness. The BLM would then contact the operator to find out when the operator expects to sample a given FMP.

Proposed § 3175.113(c)(3) would modify the language in existing § 3175.113(c)(3) by updating the GPA reference from GPA 2166–05 to GPA 2166–17. Under proposed § 3175.30, the BLM would incorporate GPA 2166–17, which is the latest published version of the standard.

Proposed § 3175.113(c)(3) would also allow operators to seek approval from the PMT for alternative methods of cleaning sample cylinders. The BLM is aware of several alternative sample-cylinder cleaning methods. The PMT would analyze laboratory test data that compares the effectiveness of the alternative method with the effectiveness of the method in Appendix A of GPA 2166–17. If the alternative method produces similar or better results, the PMT would recommend that the BLM approve the method, with conditions of approval, if necessary, and add it to the list of approved equipment and procedures on the BLM's website. Once approved, the alternative method would be available to all operators on Federal or Indian leases without any further review or approval required.

Proposed § 3175.113(d)(1) would prohibit the use of sampling separators while spot sampling with portable gas chromatographs. Sampling separators can cause condensation or vaporization of the heavier hydrocarbons in the gas stream due to temperature differences caused by the separator. The seventh edition of API MPMS Chapter 14, section 1 does not recommend using sampling separators due to the potential the separator may cause heat transfer. GPA Standard 2166–05 also cautions against the use of sampling separators, stating that research has shown the misuse of separators can cause sample distortion, and that a separator is only useful for streams containing unwanted hydrocarbon droplets, amine, glycol, water, or other contaminants. GPA Standard 2166–05 also states that for clean, dry sample streams above the hydrocarbon dew point, the separator serves no useful purpose and could corrupt the sample. The BLM believes sampling separators create the risk that operators using this equipment will collect unrepresentative samples; the BLM is therefore proposing to prohibit their use in portable gas chromatograph sampling.

Under the proposed rule, the BLM would remove § 3175.113(d)(5) and (d)(6) of the existing regulations and replace them with different requirements (§ 3175.113(d)(5) through (d)(8)). These sections of the existing regulations require operators using portable gas chromatographs to run at least three analyses when sampling a low- or very-low-volume FMP and, for high- and very-high-volume FMPs, continue to take samples until the difference between three consecutive samples is 16 British thermal units per standard cubic foot (Btu/scf) or less for high-volume FMPs and 8 Btu/scf or less for very-high volume FMPs. The intent of these requirements was to provide the BLM with some objective quality assurance that the portable GC and associated sampling system are working properly. Operators have expressed concern that this requirement not only increases their documentation burdens, but can also be difficult, if not impossible, to achieve. Because existing § 3175.113(d)(6) requires the heating value reported on the OGOR Part B to be the mean or median of the three heating values obtained under this section, operators would have to maintain a record of all three analyses that were performed.

Current practice is for operators to maintain only documentation of the analysis they use for reporting royalty. This requirement has therefore resulted in a significant increase in the amount of documentation required. Also, a portable GC samples a live gas stream, unlike a laboratory GC that is sampling from an isolated volume contained in a sample cylinder. The composition of the live gas stream is constantly changing, which can make it difficult to obtain three consecutive samples that are within the tolerances required under existing § 3175.113(d)(5). Many operators stated that these requirements were so onerous that they went away from the use of GCs and opted for other spot sampling methods, like the purge and fill method. In 2018, an industry group developed a standard operating procedure (SOP) that contained a number of objective measures to help ensure quality control when using a portable GC. The BLM recommended the use of this SOP in Washington Office Instruction Memorandum (IM) 2018–069. Proposed §§ 3175.113(d)(5) through 3175.113(d)(8) would incorporate many of the recommendations that were included in the SOP. The BLM believes that the objectives of existing § 3175(d)(5) and (d)(6) can be met using the methods in proposed § 3175(d)(5) through (d)(8).

Proposed § 3175.113(d)(5) would require the regulator for the GC to be heated or insulated to maintain the temperature of the sampled gas to at least 30 °F above the hydrocarbon dew point. The hydrocarbon dew point is the temperature below which the heavier hydrocarbons in the gas begin to condense into a liquid phase. Capturing a representative sample of the gas flowing through the FMP requires the gas temperature to be maintained above the hydrocarbon dew point so that none of the gas components drop out of the gas stream prior to entering the GC. For most parts of the sampling system, the requirement in existing § 3175.111(b) for maintaining the temperature of all of the sampling components to at least the hydrocarbon dew point is sufficient to prevent condensation. However, this requirement is not sufficient with pressure regulators because the drop in pressure through the regulator causes gas to expand, and the expanding gas causes additional cooling (known as the Joule-Thompson effect).

Proposed § 3175.113(d)(5) is similar to existing § 3175.112(c)(2), which requires external regulators that are part of the sample probe to be heated to 30 °F above the hydrocarbon dew point. The proposed requirement would be specific to regulators that are part of a GC sampling system, but not part of the sampling probe. The rationale for existing § 3175.112(c)(2) is the same as the rationale for this proposed requirement.

Proposed § 3175.113(d)(6) would require that gas chromatograph pressure regulators be set to the same pressure setting as the pressure at which the portable GC was calibrated or verified. Gas chromatographs work by injecting the gas sample through several columns, which segregate the individual components of the natural gas. A detector then measures the amount of each component as it exits the GC. The pressure of the gas coming into the GC can influence the rate at which it flows through the columns and the detector. This change in rate can alter the results from the GC. In order to ensure

accuracy, the gas pressure applied to the GC during field testing must match the gas pressure at which the GC is calibrated or verified.

Proposed § 3175.113(d)(7) would prohibit the first GC analysis at an FMP from being used to determine the heating value. The first run of gas through the GC may contain contaminates from previous samples and may not be representative of the gas flowing through the FMP. The first run should be used to purge the entire line and system with gas from the FMP being sampled.

Proposed § 3175.113(d)(8) would require that the sample line be purged and vented for a minimum of 2 minutes before sampling at each location. The BLM proposes this to maintain purity of the sample taken from the sample location, and to reduce any chance of contaminants from prior samples being mixed in with the current sample.

3175.114 Spot Samples—Allowable Methods

Existing § 3175.114 defines the allowable methods for spot sampling. The proposed rule would update the references to industry standard to make them current. Proposed § 3175.114(a) would update the GPA reference in paragraphs (a)(1), (a)(2), and (a)(3) to the latest published version (GPA 2166–17) that is incorporated by reference in § 3175.30. The BLM is not aware of any substantive changes between the version incorporated by reference in the existing rule (GPA 2166–05) and GPA 2166–17, as it relates to the three references discussed here.

3175.115 Spot Samples—Frequency

Existing § 3175.115 details the frequency requirements for spot sampling based on the FMP tier of the meter being sampled. The proposed rule would make compliance with these requirements more achievable for operators, while preserving the BLM's need for heating value determination.

The industry has expressed concerns over the requirements in existing § 3175.115(b). To address some of those concerns the BLM is proposing to modify the scope of the requirement to reduce the number of overall meters that will be affected. This paragraph allows the BLM to change the sampling frequency on high- and very-high-volume FMPs to achieve a set level of average annual heating value uncertainty as described in existing § 3175.31(b), after the FMP has been in operation for 2 years. The primary concern expressed by industry was about the expense of taking samples every 2 weeks and installing composite samplers or on-line GCs at very-high-volume FMPs, as required in the existing regulation. Industry also stated that many of their FMPs have highly variable heating values, which put them at risk of having to conduct 2-week sampling and installing the required composite sampling systems or on-line GCs. Industry argued that heating value uncertainty is a function of the quality of sampling and analysis and is not the same as the variability in heating value from sample to sample.

While the BLM is not proposing any changes to this section specifically, it is proposing changes to other sections that the BLM believes would alleviate much of the industry's concern. First, the BLM would increase the average annual heating value uncertainty from + or −1 percent to + or −2 percent for very-high-volume FMPs and from + or −2 percent to + or −3 percent for high-volume FMPs (see earlier discussion of § 3175.31(b)(1) and (b)(2), respectively). The BLM would also eliminate the requirement to install composite samplers or on-line GCs at very-high-volume FMPs (see discussion of § 3175.115(b)(5) earlier). The BLM believes these two changes would significantly reduce the potential costs imposed by this section.

The BLM does not agree with industry's assertion that average annual heating value uncertainty is an inappropriate method of addressing spot sampling frequency and heating value variability from sample to sample. For more information, please see the preamble discussion of average annual heating value uncertainty in the proposed and final rule documents for existing subpart 3175 (80 FR 61675 and 81 FR 81583).

The BLM would delete existing § 3175.115(b)(5), which requires operators to install composite samplers or on-line GCs at very-high-volume FMPs when the BLM determines that the required level of average annual heating value uncertainty at an FMP cannot be achieved through spot sampling. The BLM is proposing to delete this requirement because it believes that the proposed increase in average annual heating value uncertainty would render this requirement largely unnecessary. Typically, the FMPs that are subject to the largest variability in heating value from sample to sample are lower-volume FMPs that are associated with plunger-lift operations. Very-high-volume FMPs tend to measure gas produced from newly drilled wells that do not need plunger lifts and have less heating value variability. In response to comments on the proposed rule for the existing regulations (see preamble discussion at 81 FR 81585), the BLM concluded that roughly 25 percent of the estimated 900 very-high-volume FMPs nationwide would not be able to meet the ±1 percent performance requirement for average annual heating value uncertainty in § 3175.31 through spot sampling. These FMPs under the existing regulation require the installation of an on-line GC or composite sampling system. The 25 percent figure is based on a required average annual heating value uncertainty of ±1 percent. By increasing the uncertainty from ±1 percent to ±2 percent, as proposed in § 3175.31(b)(2), the BLM estimates the number of very-high-volume FMPs that would require a composite sampler or on-line GC would drop by a factor of 4. This would reduce the number of very-high-volume FMPs requiring a composite sampling system or an on-line GC from 25 percent to roughly 6 percent. The BLM does not believe it is necessary to include a requirement that would only apply to such a small number of FMPs.

Proposed § 3175.115(c) would move the existing Table 1 to § 3175.115 (Maximum Time Between Samples) to Appendix B of this subpart, and would refer the readers to Appendix B for this information. See the discussion of Appendix B, later.

Proposed § 3175.115(d) would increase the amount of time operators would have to install a composite sampling system or on-line GC from 30 days after the due date of the next sample to 90 days after the due date of the next sample. This proposed change is based on industry concerns that the lead-time operators need to plan for, order, and install on-line GCs or composite sampling systems is commonly greater than 30 days. During this 90-day period an operator would not have to take spot samples. While this will reduce heating value accountability during that period, the BLM believes that the potential benefits of an operator installing an on-line GC or composite sampling system, providing a more representative sample over the sampling period, outweigh the temporary loss of spot samples during the 90-day period.

3175.116 Composite Sampling Methods

Existing § 3175.116 defines the requirements for composite sampling. The existing regulation contains limited guidance on the use of this method. The proposed rule would provide clarity for operators and inspectors on this sampling method. The BLM is proposing several additional

requirements for composite sampling systems as discussed later. However, the BLM is not aware of any industry standards for composite samplers other than API MPMS 14.1.12.1. As a result, the BLM is soliciting information from the public regarding best practices for the design, installation and use of composite samplers.

Proposed § 3175.116(c) would add a requirement that sample cylinders used in composite sampling systems comply with the general spot-sample requirements under § 3175.113(c). The existing regulation requires that sample cylinders be sized to ensure that the capacity is not exceeded within the normal collection frequency; however, it does not impose any additional requirements such as those for cylinders used in spot sampling. There are no requirements for the materials that are used to construct and clean the cylinders. The BLM believes that the omission of these requirements for composite sample systems was an oversight and will not add any additional burdens to industry, as they represent common industry best practice despite not being specifically stated in the referenced standard, API MPMS 14.1.12.1.

Proposed § 3175.116(d) would add a new requirement that all components of the sampling system be heated to at least 30 °F over the hydrocarbon dew point at all times. The BLM would add this requirement to prevent condensation and compensate for the effects of cooling under the Joule-Thompson effect as pressure is reduced when the gas runs through valves and fittings.

3175.117 On-Line Gas Chromatographs

Proposed § 3175.117(a) would update the reference to GPA 2166–05, Appendix D, in the existing regulation, with GPA 2166–17, Appendix D, in the proposed rule. The BLM is not aware of any change in Appendix D from the previous version to the newest version. The BLM also requests comment and information from the public regarding industry standards or best practices for the selection, installation, and operation of on-line GCs.

3175.118 Gas Chromatograph Requirements

Existing § 3175.118 contains requirements for gas chromatographs. The proposed rule would update the references to industry standards to the most current editions and address the requirements for gas analysis more clearly, specifically addressing the confusion between the terms ''extended analysis'' and ''nonanes+''.

Proposed § 3175.118(c)(2) would update the referenced industry standard from GPA 2198–03 in the existing rule, to GPA 2198–16 in the proposed rule in order to stay up-to-date with the latest standards for verification and calibration gas standards. There are two changes in the updated GPA standard. First, GPA 2198–16 requires that the concentration of the gas used for verification and calibration be closer to the expected concentration of the gas sampled in the field than what was required under GPA 2198–03. While the older standard requires the concentration of each component to be no less than one-half the concentration expected in the field, it did not place an upper limit for the concentration. The GPA 2198–16 standard places an upper limit of no more than double the expected concentration of the gas sampled in the field. For example, if the expected concentration of propane in the field sample were 4 mole percent, the concentration of propane in the calibration gas could be no less than 2 mole percent and no more than 8 mole percent, according the GPA 2198 standard. In addition, the GPA 2198–16 standard includes steps for the operator to take if the calibration gas has dropped below its hydrocarbon dew point and recommends heating the standard to 30 °F above the hydrocarbon dew point for 4 hours before use. The older standard recommends that the calibration gas should be heated to 20 °F above hydrocarbon dew point for 12 hours before use. The BLM does not believe either of these changes would place significant burdens on the operator.

The proposed updated reference to GPA 2198–16 would also apply to proposed § 3175.118(c)(3) and § 3175.118(c)(4), which refer to GPA 2198–16, Section 6 and Section 5, respectively. The existing regulation references GPA 2198–03, Section 5 and Section 6. The only difference between these sections is the inclusion of reference standards for natural gas liquids. Because subpart 3175 only addresses natural gas, the inclusion of standards for natural gas liquids is not relevant to this rule.

Under existing § 3175.118(e) operators are required to perform extended analyses in accordance with GPA 2286–14. This proposed rule would remove this requirement. Existing § 3175.119(b) requires operators to determine the concentrations of hexanes, heptanes, octanes, and nonanes+, if the mole percent of hexanes+ exceeds 0.5 mole percent. In the development of the existing subpart 3175, the BLM accepted comments on the proposed rule that suggested the BLM incorporate GPA 2286–14, because it would set standards for analyzing hexanes, heptanes, octanes, and nonanes+. The BLM agreed with this comment and added existing § 3175.118(e) as a result. Also based on these comments, the BLM assumed that the term ''extended analysis'' was synonymous with the term ''$C_9$+'' or ''nonanes plus'' analysis. Since publication of the existing rule in November 2016, the BLM has determined that the term ''extended analysis'' has a different meaning than a $C_9$+ analysis and the incorporation of GPA 2286–14 is inappropriate for the BLM's intended purpose. The incorporated GPA 2286–14 standard requires a third column that separates hydrocarbons up through $C_{14}$. This is not needed in normal field conditions, because hydrocarbons above $C_9$, or nonane, rarely exist in sufficient quantities to affect the heating value of the gas due to the high hydrocarbon dew point of larger hydrocarbon molecules. To reduce unnecessary burden on industry while still meeting the desired intent of a more detailed analysis, the BLM proposes to only require $C_9$+ analysis. The new $C_9$+ analysis is discussed in the proposed regulation within the definition of nonanes+ at § 3175.10 and at § 3175.119. The requirement to use GPA 2286–14 represents an unnecessary burden to industry. Under the proposed rule, the BLM would delete the reference to extended analysis and remove the incorporation by reference for GPA 2286–14.

3175.119 Components To Analyze

Existing § 3175.119 defines the minimum requirements for component detail in gas analysis. The proposed modification to the language would alter those requirements based on detailed testing data that the BLM has received from Anadarko Petroleum showing when the greatest risk to royalty exists. All graphs shown in this section were provided by Anadarko.

Proposed § 3175.119(a)(7) would add flexibility to the requirement that gas must be analyzed for either $C_6$+ or $C_9$+. The existing regulation requires $C_6$+ to be analyzed when the concentration of $C_6$+ is 0.5 mole percent or less. Several operators have pointed out that this provision would prevent an operator from voluntarily performing a $C_9$+ analysis when the concentration of $C_6$+ was 0.5 mole percent or less. This was not the intent of the requirement because a $C_9$+ analysis would exceed the minimum standard of $C_6$+ and

would be acceptable to the BLM. As a result, the BLM proposes to change this requirement to clarify that a $C_9$+ would also fulfill this requirement. However, the BLM would also clarify that if an operator voluntarily performs a $C_9$+ analysis, they must include the individual concentrations of hexanes, heptanes, and octanes in the analysis.

Proposed § 3175.119(b) would require a $C_9$+ analysis when the $C_6$+ analysis exceeds 1 mole percent. The existing regulation requires a $C_9$+ analysis when the $C_6$+ analysis exceeds 0.5 mole percent. The BLM is proposing this change based on data provided by an operator who collected 2,466 gas samples and ran both a $C_6$+ and $C_9$+ on each sample. The following graph shows the difference in heating value between the $C_6$+ analysis and the $C_9$+ analysis for each sample as a function of the mole percent of $C_6$+. Note that a negative difference indicates that the $C_6$+ analysis yielded a lower heating value than the $C_9$+ analysis.

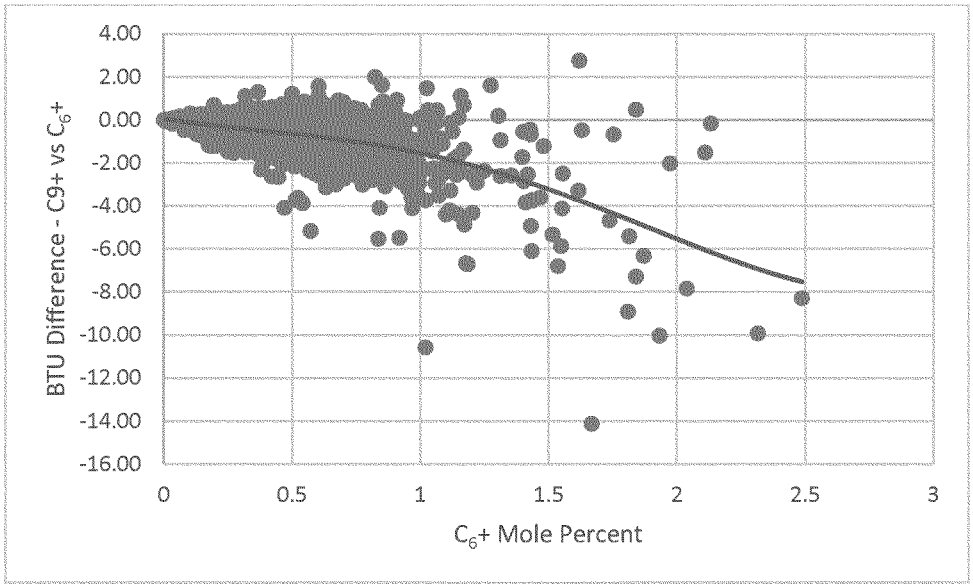


To analyze this data, the BLM created three frequency plots; the first plot (Plot 1) includes only the samples where the mole percent of $C_6$+ was between 0 and 0.5 mole percent, the second plot (Plot 2) includes only those samples where the mole percent of $C_6$+ was between 0.5 mole percent and one mole percent, and the third plot (Plot 3) includes only those samples where the $C_6$+ was 1 mole percent or greater. Each plot consists of ''buckets,'' where each bucket contains samples where the Btu difference using a $C_6$+ analysis and a $C_9$+ analysis is shown on the X-axis. The Y-axis shows how many samples fall into each bucket. For example, in Plot 1, 919 of the samples showed that there was no difference in heating value between using a $C_6$+ analysis and a $C_9$+ analysis and 671 of the samples showed that the $C_6$+ analysis resulted in a heating value one Btu/scf less than the $C_9$+ analysis.

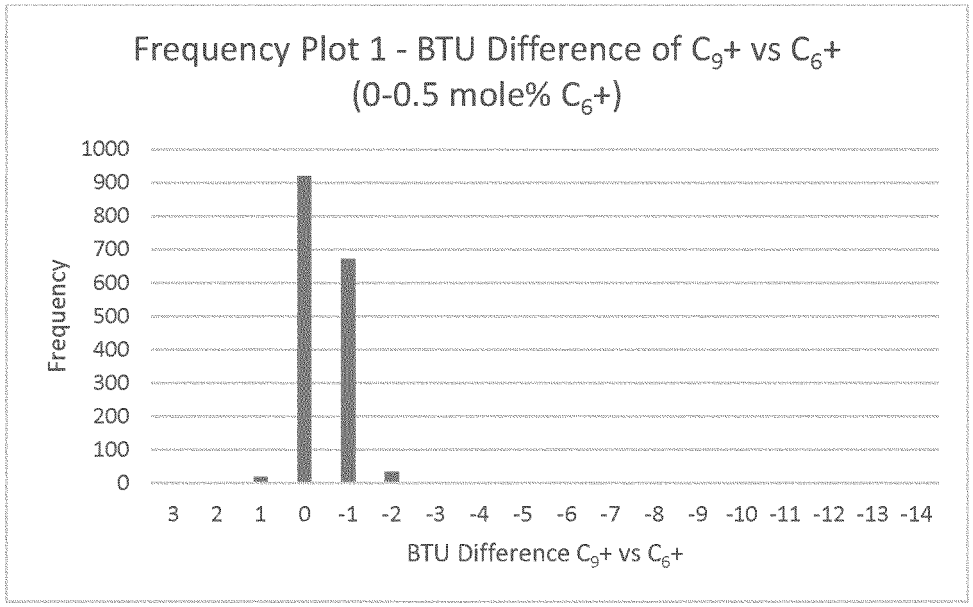

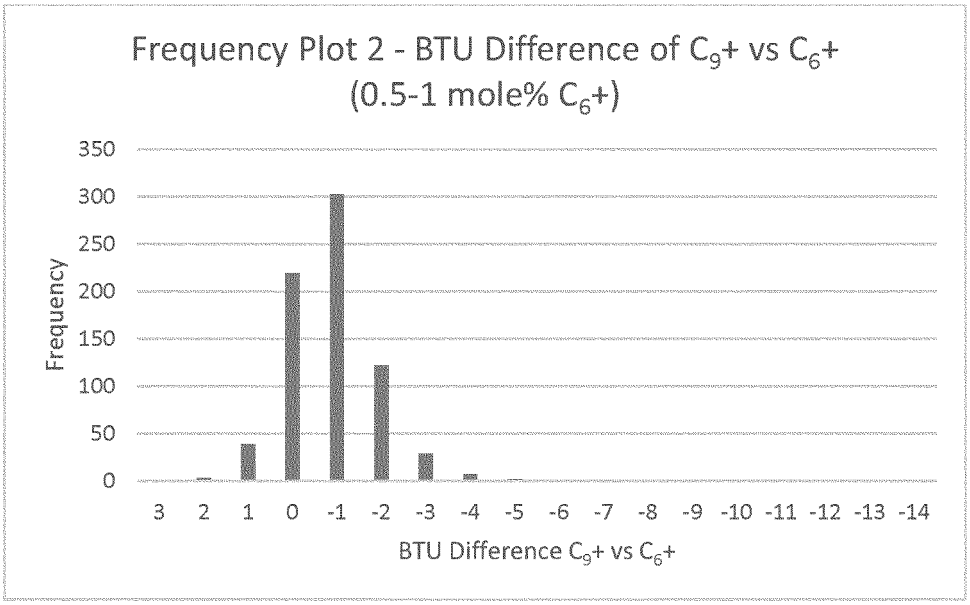


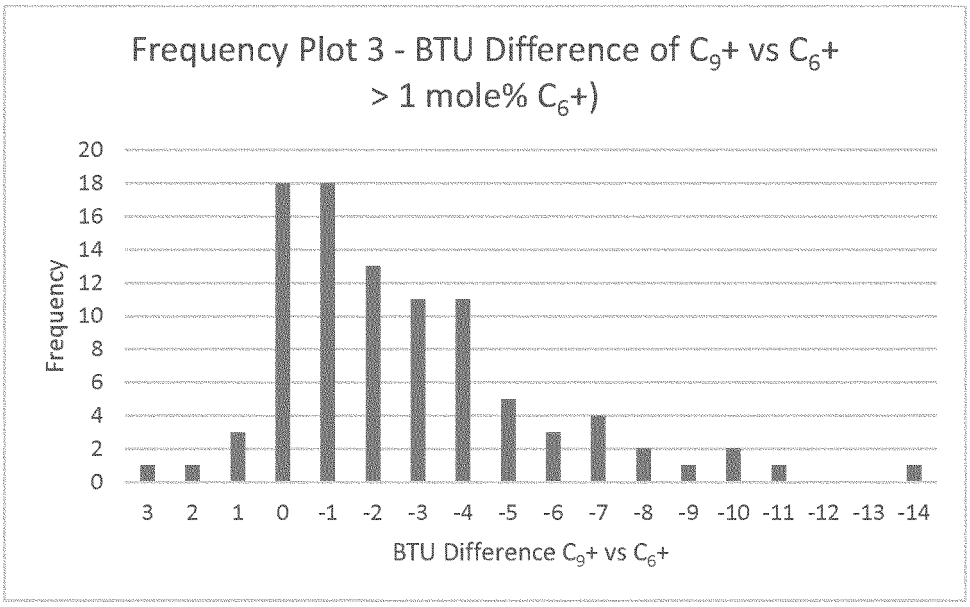


The following table summarizes the results from the three plots:

| | Concentration of $C_6$+ (mole percent) | | |
|---|---|---|---|
| | <0.5 (plot 1) | 0.5–1.0 (plot 2) | >1.0 (plot 3) |
| Total samples | 1,647 | 724 | 95 |
| Average difference (Btu/scf) | −0.43 | −0.87 | −2.66 |
| Median difference (Btu/scf) | 0 | −1 | −2 |
| Maximum heating value difference | −4 | −6 | −14 |

From the three plots and summary table, the BLM believes there is a clear bias of under-reporting of heating value that increases as the mole percent of $C_6$+ increases, when a $C_6$+ analysis is used by an operator instead of a $C_9$+ analysis. The absence of statistically significant bias is one of the performance goals of § 3175.31(c)

However, both the average and median difference between the heating values in a $C_6$+ analysis and $C_9$+ analysis are 1 Btu/scf or less for $C_6$+ concentrations of 1 mole percent or less (see Plots 1 and 2), which could be due to round-off error or otherwise considered as insignificant. The results from Plot 3 show an average difference

between a $C_6$+ analysis and a $C_9$+ analysis of 2.66 Btu/scf, a median difference of −2 Btu/scf, and a maximum difference of 14 Btu/scf. This analysis suggests that a $C_9$+ analysis should be required when the concentration of $C_6$+ exceeds 1 mole percent. To confirm this conclusion, the BLM also did an economic analysis.

In the development of the existing regulation, the BLM used a cost versus royalty-risk approach when determining thresholds. With this analysis, the threshold is set where the cost to an operator of implementing a requirement equals the amount of potential lost royalty if the higher standard is not met. For this analysis, the BLM made the following assumptions based on BLM field experience:

- Cost of $C_6$+ analysis: $100
- Cost of $C_9$+ analysis: $300
- Gas price: $3/MMBtu, $4/MMBtu
- Sample frequency: 360 days for high-volume FMPs and 180 days for very-high-volume FMPs
- Royalty rate: 12.5 percent

The BLM then determined the mole percent of $C_6$+ that resulted in $200 of lost royalty over the sampling period if a $C_9$+ analysis was not conducted. Two hundred dollars is the assumed difference in cost between a $C_6$+ analysis and a $C_9$+ analysis. Note that the sampling frequencies assume the operator is following the alternative $C_9$+ sampling schedule allowed in § 3175.119(c). The following figure shows the break-even point for $C_9$+ analysis as a function of average flow rate through the FMP. For example, for an FMP with an average flow rate of 2,000 Mcf/day and an assumed gas price of $4/MMBtu, a $C_6$+ mole percent threshold of 0.85 mole percent would be the break-even point. If the gas price were $3/MMBtu and an average FMP flow rate of 2,000 Mcf/day, a $C_6$+ mole percent of very close to 1 mole percent would be the break-even point.

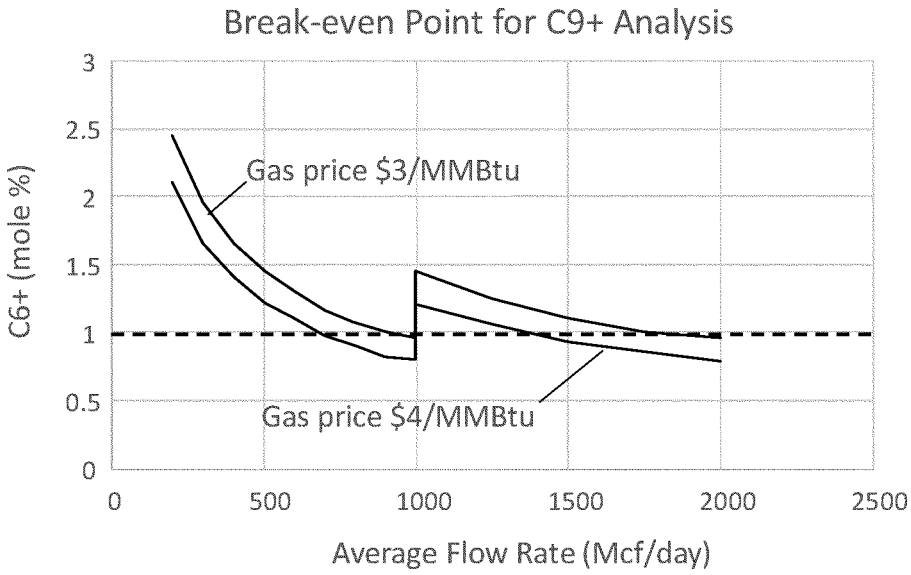


Based on this analysis, the BLM believes that a threshold of 1 mole percent $C_6$+ would exceed the break-even point, where the cost of performing a $C_9$+ equals the potential for lost royalty if only a $C_6$+ analysis was conducted. Therefore, the BLM concludes that this threshold would reduce burden to industry, as compared to the 0.5 mole percent threshold in the existing rule, while still providing the public and Indian tribes and allottees with a fair return. The BLM requests comment on these data and the changes proposed based on the BLM's review of the data.

3175.120 Gas Analysis Report Requirements

Proposed § 3175.120(a)(6) would insert the phrase ''if applicable'' to the requirement that the gas analysis report include the name of the laboratory where the analysis was performed. The BLM is proposing this change because gas analysis reports from portable GCs are not run in a laboratory; therefore, this requirement would not be applicable to them.

Proposed § 3175.120(a)(18) would remove the requirement that the gas analysis report must show the un-normalized mole percent for each component analyzed and instead only require the sum of the un-normalized mole percents from all analyzed components. The un-normalized mole percents represent the raw output of the GC and rarely add up to exactly 100 percent, due to uncertainties inherent to the GC. As a quality control measure, both the existing and proposed regulations require the total un-normalized percent to be within 97 percent to 103 percent. A total un-normalized mole percent outside of this range could indicate problems with a GC, such as a leak, a bad column, or that the GC is out of calibration. The BLM is proposing to remove the requirement for gas analysis reports to include the un-normalized mole percent of each component because the BLM does not use this information and collecting it is an unnecessary burden on operators.

Proposed § 3175.120(d) would clarify the reference for AGA Report No. 8 by specifying the parts containing the calculation method for base supercompressibility. This creates no additional burden or change from the current regulation. Proposed § 3175.120(f) would remove the double reference to the ability to request a variance to remove the GARVS requirement. This change is made to clarify the language.

3175.125 Calculation of Heating Value and Volume

Existing § 3175.125 defines the minimum requirements for the calculation of heating value and volume. The proposed rule would clarify the requirement for averaging the heating value between two royalty measurement points. Under proposed § 3175.125(b)(1), the existing requirement for calculating and reporting an average heating value

would only apply if a lease, unit PA, or CA has more than one FMP that doesn't yet have an FMP number. Once the BLM assigns FMP numbers, each FMP will report as individual line items on the OGOR, negating the need to average heating values when there are multiple FMPs. Under the existing regulation, if there is more than one FMP the average heating value is required in all circumstances. The BLM proposes this change to reduce unnecessary reporting burdens on industry by removing the requirement to report the average heating value for a lease, unit PA, or CA once the BLM assigns individual FMP numbers.

3175.126 Reporting of Heating Value and Volume

Existing § 3175.126 contains the reporting requirements for heating value and volume. The proposed rule would modify this language to clarify those requirements and expand on the requirements for devices used to measure water vapor. Under existing § 3175.126(a)(1), the reported heating value must be ''dry,'' unless the water vapor content is determined through actual measurement and reported on the gas-analysis report. However, the existing regulation does not explicitly state that the water vapor content must be included in the heating-value calculation. The proposed rule would insert the requirement for the measured water vapor content to be included in the heating value calculations. While not a change from existing requirements, the additional language would reduce operator confusion over the requirements of heating-value determination and reporting when water-vapor content has been measured.

Existing § 3175.126(a)(1)(i) lists chilled mirrors as an approved method of measuring water vapor. Under the proposed rule, the BLM would have to approve chilled mirrors by make and model and would place them on the list of approved equipment and methods at *www.blm.gov.* The BLM is proposing to add this requirement because there are numerous models of chilled mirrors on the market and the BLM has no assurance of how accurate these devices are or what operating limitations may apply to them. This requirement would specifically apply to manually operated chilled mirrors. Under proposed § 3175.126(a)(1)(ii), the BLM would apply the same requirements to automated chilled mirrors, for the same reasons.

Existing § 3175.126(a)(1)(ii) lists laser detectors as an approved method of measuring water vapor. Under the proposed rule, laser detectors would no longer be an approved method, but operators could submit individual laser detector makes and models to the BLM for review and approval under revised § 3175.126(a)(1)(iii). The BLM is proposing this change based on concerns that these devices may have certain operating limits that the PMT should review (see the discussion of § 3175.40(h) earlier).

Proposed § 3175.126(a)(1)(iii) would clarify that only those devices that are placed on the BLM's list of approved equipment can be used in the measurement of water vapor. The existing regulation only states that other devices would have to be approved by the BLM.

Proposed § 3175.126(a)(3) would change ''hexane+'' to ''hexane-plus'' for consistent wording with the rest of the regulation. Under existing § 3175.126(a)(3)(i), the BLM defines the required composition of hexanes-plus (60 percent hexanes, 30 percent heptanes, and 10 percent octanes). Under the proposed rule, the BLM would define the minimum heating value of hexanes-plus as 5,129 Btu/scf, which is equivalent to the heating value of the $C_6$+ composition required in the existing rule. This change would allow flexibility for operators who may have contracts that specify a different composition for $C_6$+. Under the proposed rule, the operator could use whatever assumed composition of $C_6$+ they want to use, as long as the equivalent heating value of that composition is at least 5,129 Btu/scf.

The BLM also proposes that in lieu of using the minimum heating value for hexanes-plus required in proposed § 3175.126(a)(3)(i), an operator may use the actual heating value of hexanes, heptanes, and octanes from the $C_9$+ composition as determined under § 3175.119(c). Because these would be measured values of $C_6$+, they would represent a more accurate heating value of the gas than an assumption of heating value under § 3175.126(a)(3)(i). It would also allow the voluntary use of $C_9$+ composition analysis for increased measurement accuracy on FMPs that have 1 mole percent or less of $C_6$+.

The BLM proposes to add a new paragraph § 3175.126(a)(4) to define the minimum heating value of $C_9$+. Under the existing regulation, no minimum heating value or specific composition is defined for $C_9$+. Under the proposed rule, the BLM would define the minimum heating value of $C_9$+ as 6,996 Btu/scf to remove any confusion on the acceptable heating value of $C_9$+. Defining a minimum heating value instead of a specific composition would give operators flexibility in the composition they choose, as long as that composition has a heating value of at least 6,996 Btu/scf.

3175.130 GSAMP Requirements

In addition to adding a definition for gas-storage agreement measurement points (GSAMP) in § 3175.10, the BLM would also include requirements for these meters in proposed § 3175.130.

Paragraph 3175.130(a) would re-define the flow categories specifically for GSAMPs.

Of the 35 gas-storage agreements currently in effect on Federal land, 28 of them pay the BLM a fee that is based on the volume of gas either injected into or withdrawn from the gas-storage reservoir. The withdrawal fee tends to be substantially higher than the injection fee, so this analysis is based only on the withdrawal fees, which are shown in the following figure. Each marker on the graph represents a GSA, with the round markers representing GSAs that are operating under a re-negotiated contract as of September 6, 2018, and the triangle markers represent GSAs that are operating (or have operated and are now terminated) under the original contract fees. Gas storage agreements where the withdrawal fee is not based on the volume withdrawn are not shown on the graph.

The BLM believes that GSAs with re-negotiated contracts represent a better and more up-to-date representation of withdrawal fees. Also, because most fees are subject to re-negotiation based on inflation, the higher fees are more representative of future prices than are the lower fees. Based on these assumptions, the BLM believes that a fair average value for withdrawal fees is $0.020/Mcf.

To compare withdrawal fees to royalty value, the withdrawal fee must be converted to an MMBtu basis. Because withdrawn gas typically has a heating value of around 1 MMBtu/Mcf, the heating value equivalent price is the same as the price per Mcf, or $0.020/MMBtu. Dividing the typical royalty value of gas ($0.474/MMBtu) by $0.020/MMBtu yields a ratio of 23.7. In other words, on an economic basis, an MMBtu of gas produced from a lease well is worth at least 23.7 times as much as an MMBtu of gas injected into or withdrawn from a gas-storage agreement. Therefore, the BLM concludes that an equivalent threshold between low- and very-low-volume meters for GSAMPs would be 23.7 times greater than 35 Mcf/day, which is 830 Mcf/day. The BLM would round this value to 800 Mcf/day as the new threshold between low- and very-low-volume GSAMPs. The equivalent

threshold between a low- and high-volume FMP would be 4,700 Mcf/day using the same methodology. The following graph collects data from GSA reports from the BLM's system of Federal land records (LR2000) as of November 14, 2007, and with updated fee information as of September 6, 2018; the information was compiled and placed in the graph by BLM petroleum engineer Rich Estabrook (retired).

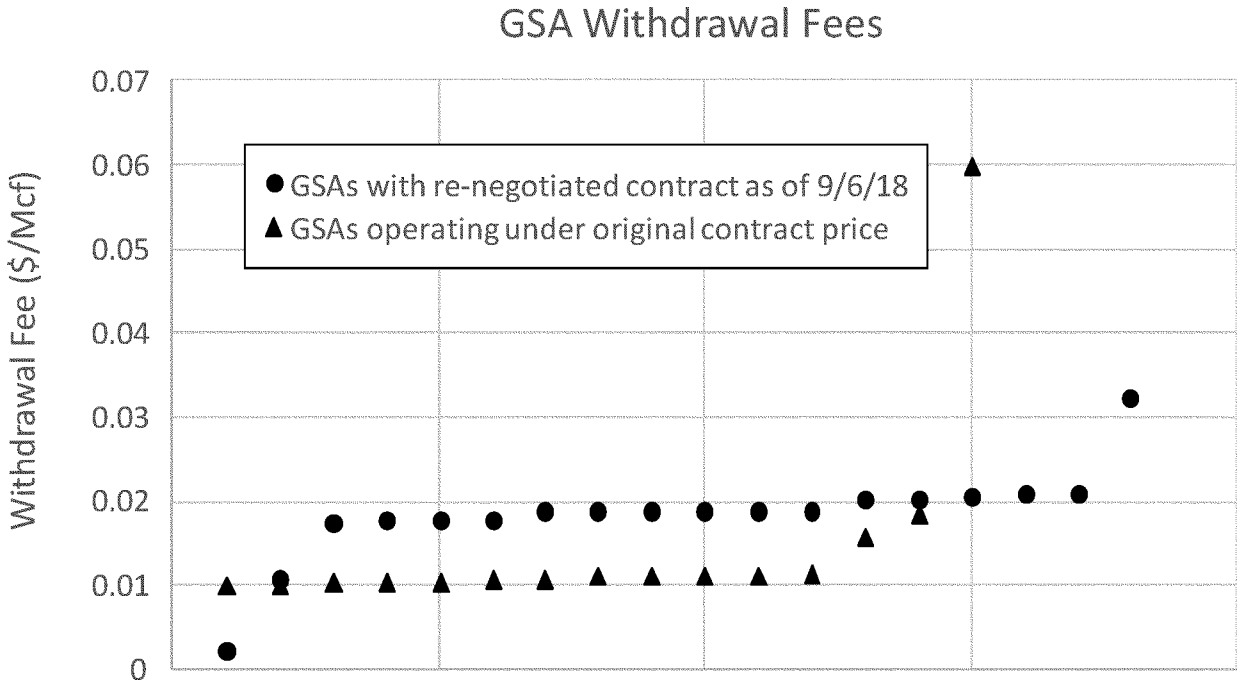


Proposed § 3175.130(b) would exempt GSAMPs from the gas-sampling, analysis, and heating-value reporting requirements of § 3175.80(p), § 3175.110, § 3175.120, § 3175.121, § 3175.125(a) and (b), and § 3175.126. The purpose of taking and analyzing gas samples at an FMP is to determine three parameters: Heating value, which is a direct multiplier in the determination of royalty; relative density, which affects the volume calculation to some degree; and gas composition, which is used to determine compressibility and also affects the volume calculation, although to a much lesser degree. Most gas-storage sites are depleted oil and gas reservoirs with little to no recoverable oil or gas left in them. The gas that is stored in these reservoirs is typically transmission-quality gas that consists primarily of methane. Because the composition of the gas that is injected into or withdrawn from a gas-storage reservoir stays fairly constant over the life of the operation, the heating value and relative density also remain fairly constant. In addition, injection and withdrawal fees are only based on volume; therefore, heating value is not used in the calculation of fees. The slight changes in relative density and compressibility would have little impact on the volume calculation. The BLM does not believe that gas sampling, analysis, and reporting on the withdrawn gas has any public benefit in these cases.

There are some gas-storage reservoirs where the gas withdrawn from the reservoir has a higher heating value than the gas injected into the reservoir. The enrichment of the gas is due to the production of royalty-bearing native oil and gas that still exists in the reservoir. The only way to determine how much native gas was produced is to compare the heating value of the gas injected with the heating value of the gas withdrawn. In addition, the heating value of the withdrawn gas may no longer be as consistent from month to month, due to the addition of native gas production. However, royalty is due on native oil and gas that is withdrawn from the GSA, therefore the meter measuring the withdrawal would be an FMP. The definition of GSAMP clarifies that if the meter measures both gas from a GSA and native gas, it is an FMP. As an FMP, the meter would have to comply with all sections of subpart 3175, including the sections pertaining to gas sampling, gas analysis, and the reporting of heating value. The BLM is specifically seeking comments on this proposed GSAMP language.

Existing § 3175.130 pertains to a testing procedure for transducers. The proposed rule would remove this provision and, instead, place it on the website for the PMT. There are two reasons for this proposed change. First, the BLM wants consistency between the oil measurement rule (subpart 3174) and this rule. The oil measurement rule does not include testing procedures because they will be included on the PMT section of the *www.blm.gov* website. The BLM also decided that providing the testing procedures on the website would provide more flexibility if certain aspects of the procedures need to be modified based on experience and input from operators and manufacturers applying for BLM approval of their devices or procedures. As explained in the discussion of the proposed oil measurement rule earlier, the BLM recognizes that there is a tradeoff between flexibility and public participation in this approach to testing procedures. The BLM seeks comment on the merits of providing the test procedures for oil and gas measurement via the PMT website rather than codifying them in subparts 3174 and 3175, respectively. The BLM also seeks comment on whether the test procedures would benefit from development in a notice-and-comment rulemaking or some other method that would afford greater public participation.

3175.140 Temporary Measurement

The BLM is proposing to add a new section under § 3175.140 to address temporary measurement. Temporary measurement is defined in 43 CFR 3170.10 as a meter that is in place for less than 3 months. Temporary measurement typically applies to a gas meter that is part of a measurement skid used to measure the oil and gas from a newly drilled well before the permanent measurement facility is installed. The existing rule does not address temporary measurement.

Under proposed § 3175.140, a temporary gas meter would have to meet all the requirements of an FMP except for the routine verifications required for mechanical recorders and EGM systems, basic meter-tube inspections, and detailed meter-tube inspections. The reason temporary meters would be exempt from these requirements is because a temporary meter is limited to 3 months of operation and the verifications and meter-tube inspections listed earlier would be done at intervals of 3 months or greater under the proposed rule.

Section 3175.140 in the existing rule pertains to a testing procedure for flow-computer software. The proposed rule would remove this provision and, instead, place it on the website for the PMT. There are two reasons for this proposed change. First, the BLM wants consistency between the oil-measurement rule (subpart 3174) and this rule. The oil-measurement rule does not include testing procedures because they will be included on the PMT website. The BLM also decided that providing the testing procedures on the website would provide more flexibility if certain aspects of the procedures need to be modified based on experience and input from operators and manufacturers applying for BLM approval of their devices or procedures. As discussed earlier, the BLM is seeking comment on this approach to testing procedures.

3175.150 Immediate Assessments

The proposed rule would remove two of the 10 immediate assessments, both related to mechanical recorders. The first is for failure to conduct a mechanical recorder verification after installation or following repair as required under § 3175.92(a), and the second is for failure to conduct a routine mechanical recorder verification as required under § 3175.92(b). The BLM is proposing to remove these immediate assessments because mechanical recorders are becoming less prevalent and are typically only found on very-low-volume FMPs where the risk of royalty loss is minimal.

**Appendix B to 3175—Time Between Samples**

Appendix B of the proposed rule would contain a new table defining the maximum allowable time in days between required orifice-plate inspections, mechanical recorder and EGM system verifications, and spot sampling frequencies. The existing rule establishes the required monthly frequency for each of these activities, but there has been some confusion as to how this should be interpreted. For example, routine mechanical recorder verifications for a low-volume FMP must occur every 3 months according to existing Table 1 to § 3175.90. This frequency would suggest that if a verification was performed on January 1st, the next verification could occur as late as April 30th. This would result in 4 months between verifications instead of the intended 3 months. The same issue applies to verifications for EGM systems and routine orifice-plate inspection frequencies. To address this confusion for spot sampling frequency, the BLM included existing Table 1 to § 3175.115, which establishes the maximum time between samples for a given monthly frequency. For example, under Table 1 to § 3175.115, for a required 3-month spot sampling frequency, no two consecutive spot samples can be more than 105 days apart. The BLM added this to the existing rule to accommodate unforeseen circumstances such as adverse weather, equipment breakdowns, or scheduling issues that would give operators some flexibility if they could not sample at the required 3-month mark. Although the same issue applies to routine orifice-plate inspections, mechanical recorder verification, and EGM system verifications, the existing regulation does not include tables similar to Table 1 to § 3175.115 for these activities. To address this issue, the BLM proposes to move Table 1 to § 3175.115 to a new Appendix B and then reference Appendix B in the sections covering routine orifice-plate inspections, mechanical recorder verifications, EGM system verifications, and spot sampling.

*C. Summary of Estimated Impacts*

The BLM reviewed the proposed rule and conducted an RIA and Environmental Assessment (EA) that examine the impacts of the proposed requirements. The draft RIA and draft EA have been posted in the docket for the proposed rule on the Federal eRulemaking Portal: *https://www.regulations.gov.* In the Searchbox, enter ''RIN 1004–AE59'', click the ''Search'' button, open the Docket Folder, and look under Supporting Documents.

The BLM's 2019 proposed rule would reduce costs for both Federal and Indian onshore oil and gas operators and the BLM. The net present value of the estimated cost savings over a 10-year period is $112 million (using a discount rate of 7 percent) or $132 million (using a discount rate of 3 percent). This equates to annual costs savings of about $16 million per year (annualized over the evaluation period). These cost savings are in 2019 dollars.

In nominal terms, the proposed rule would generate a cost savings to the oil and gas industry and the Federal government averaging $23.1 million in each of the first 3 years, followed by $11.7 million per year in cost savings thereafter. Of these amounts, 88 percent of the cost savings in first 3 years would accrue to the industry, and 96 percent of the costs savings in year four and beyond would accrue to the industry.

The proposed rule would remove or relax a number of requirements for equipment, testing, installation, and recordkeeping at existing and operations. These actions would reduce the cost of regulatory compliance for oil and gas operators producing from leases on Federal and Indian mineral estate compared to what it would cost them to comply with the 2016 Final Rules. Some provisions of the 2019 proposed rule would increase compliance costs for industry and the BLM, but are more than offset by the effect of other provisions that would decrease compliance costs.

The largest cost reduction from a single provision in the proposed rule would come from an estimated $8.6 million reduction in non-hourly installation costs and hourly recordkeeping costs for oil and gas operators from less stringent requirements under 43 CFR 3173.72 and 3173.90 for receiving CAA and offlease measurement approval, and less burdensome requirements to apply for such approval. Operators would also save an estimated $3.4 million in compliance costs and the BLM would save an estimated $2.1 million in administrative costs from proposed changes to 43 CFR 3173.61. This section would no longer require that oil and gas FMP application Sundry Notices include a description of the facility's primary element (meter tube), secondary element, LACT/CMS meter, tank number(s), and wells or facilities using the FMP. The BLM estimates that this change to 43 CFR 3173.61(b)(2) would

reduce industry recordkeeping time from 1 to 2 hours across-the-board, would reduce BLM recordkeeping time from 1.5 hours to 45 minutes for Sundry Notices and other documents submitted with FMP applications for existing facilities, and from 1 hour to 30 minutes of BLM time annually for FMP applications for new and modified facilities.

There are also multiple cost-reducing provisions in 43 CFR subpart 3175 that would also have a significant combined effect. The proposed revisions to subpart 3175 would reduce total industry compliance costs by $8.9 million per year for the first 3 years following its enactment, and $5.5 million each year after that. The savings for industry would include significant changes from the following provisions:

Category 1. Increased Gas Sampling Frequency

Lower one-time, non-hourly installation costs under 43 CFR 3175(b)(2) for very-high-volume (VHV) gas FMPs, which would no longer have to install GC meters if they are unable to achieve a minimum variance (uncertainty level) of their gas samples' heating values (measured in Btu per Mcf) ($3.1 million in annualized one-time savings over 3 years);

Category 8. Orifice-Plate and Meter-Tube Inspections

Reducing the frequency of basic and detailed metering-tube inspections required for low-volume (LV) FMPs under § 3175.80(j) and § 3175.80(k)(3) from once every 5 years to once every 10 years, as well as from once every 2 years to once every 5 years for high-volume (HV) FMPs, and from once every year to once every 5 years for VHV FMPs ($2.1 million saved per year);

Category 2. Sampling Requirements

Removing annual spot-sampling requirements for very-low volume (VLV) and LV FMPs that are actually GSAMPs under § 3175.130(b) and for any HV and VHV FMPs under 3175.113(a)(1) where no current production is taking place ($1.3 million saved per year from these and related provisions);

Category 5. Calibration Frequency

Reducing from 3 months to 6 months the frequency with which HV and VHV FMPs must conduct routine EGM system verifications under § 3175.102(b) ($1.1 million saved per year);

Category 14. EGM Requirements for Logs and Calculations

Removing under § 3175.104(a)(2) the requirement that HV and VHV FMPs replace QTR devices that display fewer than five decimal places ($0.5 million in annual one-time savings for years 1–3); and,

Category 4. Type Testing

Grandfathering, under § 3175.50(a), all transducers, flow computer software versions, isolating flow conditioners, differential primary devices, and linear measurement devices (Coriolis and ultrasonic meters) at VLV, LV, and HV FMPs from type testing for PMT approval of makes and models not listed on *www.blm.gov* ($0.4 million in annual one-time savings for years 1–3).

While changes in 43 CFR subpart 3174 would have the impact of increasing compliance costs, they would be more than offset by the cost reductions from proposed changes to 43 CFR subparts 3173 and 3175 described earlier. Nearly all of the increased compliance costs under 43 CFR subpart 3174 would come from type testing and data submission to the PMT of new equipment and software makes and models grouped under *43 CFR 3174.170—Oil measurement by other methods*. These would include electronic thermometer (§ 3174.43(a)(2), and § 3174.90(e)), temperature averaging device (§ 3174.105), pressure averaging device (§ 3174.106(a)), flow computer software (§ 3174.120(a)), and measurement data system (§ 3174.121(a)) makes and models not currently listed on *www.blm.gov.*

## VII. Procedural Matters

### *Regulatory Planning and Review (E.O. 12866, E.O. 13563)*

Executive Order 12866 provides that the Office of Information and Regulatory Affairs (OIRA) within the Office of Management and Budget (OMB) will review all significant rules. The OIRA has determined that this proposed rule is significant because it would raise novel legal or policy issues.

Executive Order 13563 reaffirms the principles of Executive Order 12866 while calling for improvements in the Nation's regulatory system to promote predictability, to reduce uncertainty, and to use the best, most innovative, and least burdensome tools for achieving regulatory ends. The Executive Order directs agencies to consider regulatory approaches that reduce burdens and maintain flexibility and freedom of choice for the public where these approaches are relevant, feasible, and consistent with regulatory objectives. Executive Order 13563 emphasizes further that regulations must be based on the best available science and that the rulemaking process must allow for public participation and an open exchange of ideas. We have developed this rule in a manner consistent with these requirements.

This proposed rule would revise portions of the BLM's 2016 Final Rules. We have developed this proposed rule in a manner consistent with the requirements in Executive Order 12866 and Executive Order 13563.

The BLM reviewed the requirements of the proposed rule and determined that it will not adversely affect in a material way the economy, a sector of the economy, productivity, competition, jobs, the environment, public health or safety, or State, local, or tribal governments or communities. For more detailed information, see the RIA prepared for this proposed rule. The RIA has been posted in the docket for the proposed rule on the Federal eRulemaking Portal: *https://www.regulations.gov.* In the Searchbox, enter ''RIN 1004–AE59'', click the ''Search'' button, open the Docket Folder, and look under Supporting Documents.

### *Reducing Regulation and Controlling Regulatory Costs (E.O. 13771)*

This rule would be a deregulatory action under Section 3(a) E.O. 13771.

### *Regulatory Flexibility Act*

The Regulatory Flexibility Act (5 U.S.C. 601 *et seq.*) (RFA) requires that Federal agencies prepare a regulatory flexibility analysis for rules subject to the notice-and-comment rulemaking requirements under the Administrative Procedure Act (5 U.S.C. 500 *et seq.*), if the rule would have a significant economic impact, whether detrimental or beneficial, on a substantial number of small entities. See 5 U.S.C. 601–612. Congress enacted the RFA to ensure that government regulations do not unnecessarily or disproportionately burden small entities. Small entities include small businesses, small governmental jurisdictions, and small not-for-profit enterprises.

The BLM reviewed the SBA size standards for small businesses and the number of entities fitting those size standards as reported by the U.S. Census Bureau in the Economic Census. The BLM concludes that the vast majority of entities operating in the relevant sectors are small businesses as defined by the SBA. As such, the proposed rule would likely affect a substantial number of small entities.

The BLM reviewed the proposed rule and estimates that it would generate cost savings for industry of $20.3 million per year for each of the first 3 years following enactment, followed by

$11.2 million per year after that. For each of the estimated 4,600 oil and gas entities operating on Federal and Indian onshore mineral leases, these savings would average $4,415 per entity per year for each of the first 3 years following enactment, followed by ongoing net savings of $2,425 per entity per year beginning in year 4. These estimated cost savings would provide relief to small operators which, the BLM notes, represent the overwhelming majority of operators of Federal and Indian leases.

For the purpose of carrying out its review pursuant to the RFA, the BLM believes that the proposed rule would not have a ''significant economic impact on a substantial number of small entities,'' as that phrase is used in 5 U.S.C. 605. An initial regulatory flexibility analysis is therefore not required. In making a ''significant'' determination under the RFA, the BLM used an estimated per-entity cost savings to conduct a screening analysis. The analysis shows that the average reduction in compliance costs associated with this proposed rule are a small enough percentage of the profit margin for small entities, so as not be considered ''significant'' under the RFA. Details on this determination can be found in the RIA for the proposed rule. For the foregoing reasons, and those mentioned in the RIA at Section 2.9 Affected Small Entities, the Secretary of Interior certifies under 5 U.S.C. 605 (b), that this rule will not have a significant economic impact on a substantial number of small entities.

*Small Business Regulatory Enforcement Fairness Act*

This proposed rule is not a major rule under 5 U.S.C. 804(2), the Small Business Regulatory Enforcement Fairness Act. This proposed rule:

(a) Would not have an annual effect on the economy of $100 million or more.

(b) Would not cause a major increase in costs or prices for consumers, individual industries, Federal, State, or local government agencies, or geographic regions.

(c) Would not have a significant adverse effects on competition, employment, investment, productivity, innovation, or the ability of U.S.-based enterprises to compete with foreign-based enterprises.

*Unfunded Mandates Reform Act (UMRA)*

This proposed rule would not impose an unfunded mandate on State, local, or tribal governments, or the private sector of $100 million or more per year. The proposed rule would not have a significant or unique effect on State, local, or tribal governments or the private sector. The proposed rule contains no requirements that would apply to State, local, or tribal governments. It would revise requirements that would otherwise apply to the private sector. A statement containing the information required by the Unfunded Mandates Reform Act (UMRA) (2 U.S.C. 1531 *et seq.*) is not required for the proposed rule. This proposed rule is also not subject to the requirements of section 203 of UMRA because it contains no regulatory requirements that might significantly or uniquely affect small governments, because it contains no requirements that apply to such governments, nor does it impose obligations upon them.

*Governmental Actions and Interference With Constitutionally Protected Property Right—Takings (Executive Order 12630)*

This proposed rule would not effect a taking of private property or otherwise have taking implications under Executive Order 12630. A takings implication assessment is not required. The proposed rule would revise many of the requirements placed on operators by the 2016 Final Rules. Operators would not have to undertake certain compliance activities, either operational or administrative, associated with those rules. Therefore, the proposed rule would impact some operational and administrative requirements on Federal and Indian lands. All such operations are subject to lease terms which expressly require that subsequent lease activities be conducted in compliance with subsequently adopted Federal laws and regulations.

This proposed rule conforms to the terms of those leases and applicable statutes and, as such, the rule is not a government action capable of interfering with constitutionally protected property rights. Therefore, the BLM has determined that the rule would not cause a taking of private property or require further discussion of takings implications under Executive Order 12630.

*Federalism (Executive Order 13132)*

Under the criteria in section 1 of Executive Order 13132, this proposed rule does not have sufficient federalism implications to warrant the preparation of a federalism summary impact statement. A federalism impact statement is not required.

The proposed rule would not have a substantial direct effect on the States, on the relationship between the Federal Government and the States, or on the distribution of power and responsibilities among the levels of government. It would not apply to States or local governments or State or local governmental entities. The rule would affect the relationship between operators, lessees, and the BLM, but it does not directly impact the States. Therefore, in accordance with Executive Order 13132, the BLM has determined that this proposed rule does not have sufficient federalism implications to warrant preparation of a Federalism Assessment.

*Civil Justice Reform (Executive Order 12988)*

This proposed rule complies with the requirements of Executive Order 12988. More specifically, this proposed rule meets the criteria of section 3(a), which requires agencies to review all regulations to eliminate errors and ambiguity and to write all regulations to minimize litigation. This proposed rule also meets the criteria of section 3(b)(2), which requires agencies to write all regulations in clear language with clear legal standards.

*Consultation and Coordination With Indian Tribal Governments (Executive Order 13175 and Departmental Policy)*

The Department strives to strengthen its government-to-government relationship with Indian tribes through a commitment to consultation with Indian tribes and recognition of their right to self-governance and tribal sovereignty.

The BLM evaluated this proposed rule under the Department's consultation policy and under the criteria in Executive Order 13175 to identify possible effects of the rule on federally recognized Indian tribes. Since the BLM approves proposed operations on all Indian (except Osage Tribe) onshore oil and gas leases, the proposed rule has the potential to affect Indian tribes.

In March 2019, the BLM sent a letter to each registered tribe informing them of a public rulemaking for parts 3170. The letter offered tribes the opportunity for individual government-to-government consultation for the new rule. Subsequent to the letter, each BLM Deputy State Director for Energy, Minerals and Realty received a presentation summarizing the proposed changes to the current rules to share with the tribes. To date, three tribes have expressed interest in formal consultation upon publication of this proposed rule. Future tribal consultation may occur on an ongoing basis.

*Paperwork Reduction Act*

1. Overview

This proposed rule contains existing, revised, and new information collection (IC) activities for BLM regulations, and a submission to the OMB for review under the Paperwork Reduction Act of 1995 (PRA) (44 U.S.C. *et seq.).* All information collections require approval under the PRA. We may not conduct, or sponsor, and you are not required to respond to a collection of information unless it displays a currently valid OMB control number. The OMB has reviewed and approved the information collection requirements associated with this rulemaking and assigned the following OMB control numbers. The proposed rule would affect the following control numbers:

- Onshore Oil and Gas Operations and Production (1004–0137, expiration October 31, 2021);
- Oil and Gas Facility Site Security (1004–0207, expiration May 31, 2023);
- Measurement of Oil (1004–0209, expiration April 30, 2023); and
- Measurement of Gas (1004–0210, expiration April 30, 2023).

Please note that this section includes estimated hour and non-hour cost burdens associated with IC activities for OMB control numbers 1004–0137, 1004–0207, 1004–0209, and 1004–0210 that are not addressed in this proposed rule. Therefore, the total burden estimates described herein exceed the estimated burdens associated with the regulatory provisions directly impacted by this proposed rule. For the existing requirements unchanged by the proposed rule, we used the existing OMB-approved estimated hour and non-hour cost burdens.

The BLM is seeking to renew the information collections for 3 years with the final rulemaking. The following description of the IC activities in this proposed rule includes estimates of annual burdens. Included in the burden estimates are the time for reviewing instructions, searching existing data sources, gathering and maintaining the data needed, and completing and reviewing each component of the proposed information collection.

2. Summary of Information Collection Activities

PROPOSED RULE CHANGES IN RESPONSES AND BURDENS

| OMB control No. | Existing OMB approved responses and burdens | | Proposed rule responses and burdens | | Changes in responses and burdens | |
|---|---|---|---|---|---|---|
| | Number of responses | Number of burden hours | Number of responses | Number of burden hours | Change in responses | Change in burden hours |
| 1004–0137 | 301,663 | 1,835,888 | 222,919 | 1,772,543 | (78,744) | (63,345) |
| 1004–0207 | 93,975 | 69,640 | 89,045 | 59,740 | (4,930) | (9,900) |
| 1004–0209 | 11,742 | 5,884 | 1,382 | 5,166 | (10,360) | (718) |
| 1004–0210 | 430,782 | 95,068 | 246,726 | 66,507 | (184,056) | (28,561) |
| Total | 838,162 | 2,006,480 | 560,072 | 1,903,959 | (278,090) | (102,524) |

PROPOSED RULE CHANGES IN NONHOUR COST BURDENS

| OMB control No. | Existing OMB approved nonhour cost burdens | Proposed rule nonhour cost burdens | Changes in nonhour cost burdens |
|---|---|---|---|
| 1004–0137 | $29,370,000 | $29,370,000 | 0 |
| 1004–0207 | 0 | 0 | 0 |
| 1004–0209 | 5,580,305 | 4,070,305 | ($1,510,000) |
| 1004–0210 | 24,600,894 | 10,996,945 | (13,603,949) |
| Total | 59,551,199 | 44,437,250 | (15,113,949) |

Control Number 1004–0137

*Abstract:* Various Federal and Indian mineral leasing statutes authorize the BLM to grant and manage onshore oil and gas leases on Federal and Indian (except Osage Tribe) lands. In order to fulfill its responsibilities under these statutes, the BLM needs to perform the information collection activities set forth in the regulations at 43 CFR parts 3160 and 3170.

*Title of Collection:* Onshore Oil and Gas Operations (43 CFR part 3160 and 3170).

*OMB Control Number:* 1004–0137.

*Form Numbers:* 3160–3, 3160–4, 3160–5, and 3160–6.

*Type of Review:* Revision of a currently approved collection.

*Respondents/Affected Public:* Holders of onshore oil and gas leases on Federal and Indian (except Osage Tribe) lands, and applicants for such leases.

*Total Estimated Number of Annual Responses:* 222,919.

*Estimated Completion Time per Response:* Varies from 15 minutes to 40 hours, depending on activity.

*Total Estimated Number of Annual Burden Hours:* 1,772,543 hours.

*Respondent's Obligation:* Required to obtain or retain a benefit.

*Frequency of Collection:* On occasion, except for the following IC activities:

- Request for Approval of a Communitization Allocation Agreement (CAA), which must be submitted once;
- Response to Notice of Insufficient CAA, which must be submitted once;
- Request for Approval of a Facility Measurement Point (FMP) for Future Measurement Facilities, which must be submitted once;
- Request for Approval of an FMP for Existing Measurement Facilities, which must be submitted once; and
- Measurement Tickets, which must be submitted monthly.

*Total Estimated Annual Nonhour Burden Cost:* $29.37 million.

The current OMB inventory includes 1,835,888 annual burden hours for the related collection of information. We expect the burden estimate for the proposed rule will be 1,772,543 hours, which reflects a decrease of 78,744 responses and 63,345 hour burdens. The program changes for control number consist of IC activities moved from OMB Control Number 1004–0207 and 1004–0209, and for the large decrease in the measurement tickets burdens. The

proposed rule will not change the nonhour cost burden for this control number.

From approved annual burden hours under 1004–0137, the rule proposes changes to the following burdens:

• Measurement Tickets (upon request), 43 CFR 3174.43(b)(6) and 3174.162, (−67,000 burden hours).

The proposed rule adds the following burden hours:

• Request to Use Alternate Measurement System (One-Time), 43 CFR 3170.30, (+400 burden hours),

• Request to Use Alternate Measurement System (Annual), 43 CFR 3170.30, (+80 burden hours),

• Documentation of Early Adoption of 3174—foregoing phase-in periods (Annual), 43 CFR 3174.43(a)(1) and 3174.60(b)(3), (+500 burden hours),

• Documentation of Tank Calibration Table Strapping (Annual), 43 CFR 3174.43(a)(2) and 3174.82(d), (+2,500 burden hours),

• Notification of LACT System Failure, 43 CFR 3174.90, (+25 burden hours),

• Documentation of Excessive Meter Factor Deviation (Annual), 43 CFR 3174.43(a)(4) and 3174.154(a), (+100 burden hours), and

• Approval for Slop or Waste Oil (Annual), 43 CFR 3174.14, (−50 burden hours).

Control Number 1004–0207

*Abstract:* This collection of information enables the BLM to enforce security standards for Federal and Indian (except Osage Tribe) oil and gas leases.

*Title of Collection:* Oil and Gas Facility Site Security (43 CFR subparts 3170 and 3173).

*OMB Control Number:* 1004–0207.

*Form Number:* None.

*Type of Review:* Revision of a currently approved collection.

*Respondents/Affected Public:* Oil and gas operators, lessees, operators, purchasers, transporters, and any other person directly involved in producing, transporting, purchasing, selling, or measuring oil or gas.

*Total Estimated Number of Annual Responses:* 89,045.

*Estimated Completion Time per Response:* Varies from 15 minutes to 5 hours, depending on activity.

*Total Estimated Number of Annual Burden Hours:* 59,740.

*Respondent's Obligation:* Required to obtain or retain a benefit.

*Frequency of Collection:* On occasion.

*Total Estimated Annual Nonhour Burden Cost:* None.

The current OMB inventory includes 69,640 annual burden hours for the related collection of information. We expect the burden estimate for the proposed rule will be 59,740 hours, which reflects a decrease of 4,930 responses and 9,900 annual burden hours.

From approved annual burden hours under 1004–0207, the rule proposes changes to the following:

• Proposed § 3173.31 would revise and replace two IC activities previously approved for § 3173.6 (''Water Draining Operations —Data Collection'' and ''Water Draining Operations—Recordkeeping and Records Submission). The proposed rule would replace these two IC activities with a single IC activity, *i.e.,* ''Water-Draining Operations.'' The estimated responses decrease by 5,000 (from 65,000 for the two existing IC activities to 60,000 for the one proposed activity). The estimated burden hours decrease by 10,000 (from 25,000 for the two existing IC activities to 15,000 for the one proposed), and

• The proposed rule includes one program change. From approved annual burden hours under 1004–0207, the rule proposes changes to the Report of Theft or Mishandling of Production (43 CFR 3173.40) (+100 annual burden hours). The estimated responses increase by 70 (from 5 for the existing IC activity to 75 for the proposed activity). The estimated burden hours increase by 100 (from 50 for the existing IC activity to 150 for the proposed activity).

There are no effects on estimated non-hour burdens.

Control Number 1004–0209

*Abstract:* This collection of information enables the BLM to enforce standards for the measurement of oil produced from Federal and Indian (except Osage Tribe) leases.

*Title of Collection:* Measurement of Oil (43 CFR part 3174).

*OMB Control Number:* 1004–0209.

*Form Number:* None.

*Type of Review:* Revision of a currently approved collection.

*Respondents/Affected Public:* Oil and gas operators.

*Total Estimated Number of Annual Responses:* 1,382 responses.

*Estimated Completion Time per Response:* Varies from 15 minutes to 40 hours, depending on activity.

*Total Estimated Number of Annual Burden Hours:* 5,166.

*Respondent's Obligation:* Required to obtain or retain a benefit.

*Frequency of Collection:* On occasion.

*Total Estimated Annual Nonhour Burden Cost:* $4,070,305.

The current OMB inventory includes 5,884 annual burden hours for the related collection of information. We expect the burden estimate for the proposed rule will be 5,166 hours, which reflects a decrease of 10,360 responses and 718 hour burdens. The current nonhour cost burden is $5,580,305. We expect the nonhour cost burden for the proposed rule to $4,070,305, which reflects a decrease of $1,510,000.

From approved annual burden hours under 1004–0209, the rule proposes removal of the following burdens:

• Documentation of Tank Calibration Table Strapping (Annual), 43 CFR 3174.5(c)(3), (−2,500 burden hours),

• Notification of LACT System Failure, 43 CFR 3174.7(e)(1), (−25 burden hours),

• Documentation of Testing for Approval of a Positive Displacement (PD) Meter (One-Time), 43 CFR 3174.8(a)(1), (−800 burden hours),

• Documentation of Testing for Approval of a Positive Displacement (PD) Meter (Annual), 43 CFR 3174.8(a)(1), (−80 burden hours),

• Onsite Data Display Requirements (Annual), 43 CFR 3174.10(e), (−50 burden hours),

• Meter Prover Calibration Documentation (Annual), 43 CFR 3174.11(b), (−75 burden hours),

• Meter Proving and Volume Adjustments Notification (Annual), 43 CFR 3174.11(i)(1), (−6 burden hours),

• Request to Use Alternate Oil Measurement System (One-Time), 43 CFR 3174.13, (−400 burden hours),

• Request to Use Alternate Oil Measurement System (Annual), 43 CFR 3174.13, (−80 burden hours), and

• Approval for Slop or Waste Oil (Annual), 43 CFR 3174.14, (−50 burden hours)

From approved annual burden hours under 1004–0209, the rule proposes changes to the following burdens:

• Request for Exception to Uncertainty Requirements (One-Time), 43 CFR 3174.31, (−120 burden hours),

• Request for Exception to Uncertainty Requirements (Annual), 43 CFR 3174.31(a)(2), (−40 burden hours),

• Documentation of Testing for Approval of Automatic Tank Gauging (ATG) Equipment (One-Time), 43 CFR 3174.41(a), (−300 burden hours),

• Documentation of Testing for Approval of Automatic Tank Gauging (ATG) Equipment (Annual), 43 CFR 3174.41(a), (−60 burden hours),

• Documentation of Testing for Approval of Coriolis Meter (One-Time), 43 CFR 3174.41(d) and (e), (+200 burden hours),

• Documentation of Testing for Approval of Coriolis Meter (Annual), 43 CFR 3174.41(d) and (e), (+20 burden hours),

• Log of ATG Verification (upon request) (Annual), 43 CFR 3174.88(b)(4) and 43 CFR 3174.43(b)(1), (−1 burden hours),
• Documentation of Coriolis Meter Specifications and Zero Verification Procedure (upon request) (Annual), 43 CFR 3174.110(e) and 43 CFR 3174.43(b)(2), (No change),
• Log of Meter Factors, Zero Verifications, and Zero Adjustments (upon request) (Annual),
• 43 CFR 3174.110(e), (No change),
• ELM Audit Trail Requirements (upon request) (Annual), 43 CFR 3174.130(h)(6) and 43 CFR 3174.43(b)(4), (+375 burden hours), and
• Meter Proving Reports (upon request) (Annual), 43 CFR 3174.158(c) and 43 CFR 3174.43(b)(5), (+94 burden hours).

Proposed rule introduces the following burden hours:
• Documentation of Testing for Approval of LACT Sampling System (One-Time), 43 CFR 3174.41(b), (+1200 burden hours),
• Documentation of Testing for Approval of LACT Sampling System (Annual), 43 CFR 3174.41(b), (+200 burden hours),
• Documentation of Testing for Approval of Stand-alone Temperature Averaging Device (One-Time), 43 CFR 3174.41(f), (+60 burden hours),
• Documentation of Testing for Approval of Stand-alone Temperature Averaging Device (Annual), 43 CFR 3174.41(f) and 43 CFR 3174.105(a), (+20 burden hours),
• Documentation of Testing for Approval of Temperature and Pressure Transducers (One-Time), 43 CFR 3174.41(g) and (h), (+1,000 burden hours),
• Documentation of Testing for Approval of Temperature and Pressure Transducers (Annual), 43 CFR 3174.41(g) and (h), (+100 burden hours),
• Documentation of Testing for Approval of Electronic Liquid Measurement Software (One-Time), 43 CFR 3174.41(i), (+320 burden hours),
• Documentation of Testing for Approval of Electronic Liquid Measurement Software (Annual), 43 CFR 3174.41(i), (+80 burden hours),
• Documentation of Testing for Approval of Portable Electronic Thermometers (One-Time), 43 CFR 3174.41(j), (+60 burden hours),
• Documentation of Testing for Approval of Portable Electronic Thermometers (Annual), 43 CFR 3174.41(j), (+20 burden hours),
• Documentation of Testing for Approval of Measurement Data Systems (One-Time), 43 CFR 3174.41(k), (+80 burden hours), and
• Documentation of Testing for Approval of Measurement Data Systems (Annual), 43 CFR 3174.41(k), (+40 burden hours).

Control Number 1004–0210

*Abstract:* The information collection activities in this control number assist the BLM in ensuring the accurate measurement and proper reporting of all gas removed or sold from Federal and Indian (except Osage Tribe) leases, units, unit participating areas, and areas subject to communitization agreements, by providing a system for production accountability by operators, lessees, purchasers, and transporters.

*Title of Collection:* Measurement of Gas (43 CFR subpart 3175).

*OMB Control Number:* 1004–0210.

*Form Number:* Equipment Application (New Form).

*Type of Review:* Revision of a currently approved collection.

*Respondents/Affected Public:* Holders of Federal and Indian (except Osage Tribe) oil and gas leases, operators, purchasers, transporters, any other person directly involved in producing, transporting, purchasing, or selling, including measuring, oil or gas through the point of royalty measurement or the point of first sale, and manufacturers of equipment or software used in measuring natural gas.

*Total Estimated Number of Annual Responses:* 246,726.

*Estimated Completion Time per Response:* Varies from 6 minutes to 80 hours, depending on activity.

*Total Estimated Number of Annual Burden Hours:* 66,507.

*Respondent's Obligation:* Required to obtain or retain a benefit.

*Frequency of Collection:* On occasion, except for information collection activities at 43 CFR 3175.115 and 3175.120, which require submission of gas analysis reports at frequencies that vary from monthly to annually.

*Total Estimated Annual Nonhour Burden Cost:* $10,996,945.

The current OMB inventory includes 95,068 annual burden hours for the related collection of information. We expect the burden estimate for the proposed rule will be 66,507 annual hour burdens, which reflects a decrease of 184,056 responses and 28,561 hour burdens. The current nonhour cost burdens equals $24,600,894. We expect the nonhour cost burdens for the proposed rule will be $10,996,945, which reflects a decrease of $13,603,949.

From approved annual burden hours under 1004–0210, the rule proposes removal of the following burdens:
• Transducers—Test Data Collection and Submission for Existing Makes and Models (One-Time), 43 CFR 3175.43 and 3175.130, (−1,600 annual burden hours)
• Transducers—Test Data Collection and Submission for Future Makes and Models, (Annual), 43 CFR 3175.43 and 3175.130, (−16 annual burden hours)
• Flow-computer software—Test Data Collection and Submission foe Existing Makes and Models (One-Time), 43 CFR 3175.44 and 3175.140 though 3175.144, (−800 annual burden hours)
• Flow-computer software—Test Data Collection and Submission for Future Makes and Models (Annual), 43 CFR 3175.44 and 3175.140 though 3175.144, (−160 annual burden hours)
• Isolating Flow Conditioners—Test Data Collection and Submission for Existing Makes and Models (One-Time), 43 CFR 3175.46, (−240 annual burden hours)
• Differential Primary Devices Other than Flange-Tapped Orifice Plates—Test Data Collection and Submission for Existing Makes and Models (One-Time), 43 CFR 3175.47, (−240 annual burden hours)
• Linear Measurement Devices—Test Data Collection and Submission for Existing Makes and Models (One-Time), 43 CFR 3175.48, (−400 annual burden hours)
• Linear Measurement Devices—Test Data Collection and Submission for Future Makes and Models (Annual), 43 CFR 3175.48, (−80 annual burden hours)
• Accounting Systems—Test Data Collection and Submission for Future Makes and Models (One-Time), 43 CFR 3175.49, (−1600 annual burden hours)
• Accounting Systems—Test Data Collection and Submission for Future Makes and Models (Annual), 43 CFR 3175.49, (−160 annual burden hours)
• Sample Separator Cleaning—Documentation, 43 CFR 3175.113(c)(3), (−757 annual burden hours)
• Gas Analysis—Composite Sampling (One-Time), 43 CFR 3175.115(b)(5) (−21 annual burden hours)

Proposed rule introduces changes in burden hours for the following:
• Measurement Equipment at FMPs (NEW Form), 43 CFR 3175.40, (+240 hours)
• Schedule of Basic Meter Tube Inspection, 43 CFR 3175.80(k)(4), (−6,278 annual burden hours)
• Basic Inspection Meter Tubes—Data Collection and Submission, 43 CFR

3175.80(k), (−331 annual burden hours)
- Detailed Inspections of Meter Tubes—Data Collection and Submission, 43 CFR 3175.80(l) and (m), (−2,082 annual burden hours)
- Request for Extension of Time for a Detailed Meter Tube Inspection, 43 CFR 3175.80(k)(3), (−528 annual burden hours)
- Documentation of unedited QTR, configuration log, event log, and alarm log, 43 CFR 3175.104(a) through (d), (−3,136) annual burden hours)
- Notification of Schedule for Spot Sampling, 43 CFR 3175.113(b), (+7,486 annual burden hours)
- Sample Cylinder Cleaning—Documentation, 43 CFR 3175.113(c)(3), (−7,273 annual burden hours)
- Gas Analysis—Spot Sampling, 43 CFR 3175.115(a) and (b) and 3175.116, (−778 annual burden hours)
- On-line Gas Chromatograph Specifications, 43 CFR 3175.117(c), (−10 annual burden hours)
- Gas Chromotograph Verification—Documentation, 43 CFR 3715.118(c)(1) and (d), (−1,211 annual burden hours)
- Gas Analysis Report—Entry into GARVS, 43 CFR 3175.119(a) and 3175.120(f), (−8,586 annual burden hours)

The proposed rule will not change the following burden hours:
- Maintenance of Data at FMP, 43 CFR 3175.101(b) through (d)
- Redundancy Verification Check for Electronic Gas Measurement Systems, 43 CFR 3175.102(e)
- Notification of Verification, 43 CFR 3175.92(d) and (e) and 43 CFR 3175.92(f)
- Evacuation and Pre-charge for the Helium Pop Method—Documentation, 43 CFR 3175.114(a)(2)
- O-ring and Lubricant Composition for the Floating Piston Method—Documentation, 43 CFR 3175.114(a)(3)
- Gas Analysis—Extended Gas Analysis, 43 CFR 3175.119(b)

3. Information Collection Request

The proposed rule would remove or revise requirements that the BLM has found to be unnecessarily burdensome, unclear, inconsistent, or otherwise problematic. The proposed rule would also adopt industry standards, where appropriate, and provide for the use of emerging measurement technologies. The following section describes the proposed regulatory changes potentially changing the collection of information burdens in OMB approved control numbers.

Proposed Revision of Control Number 1004–0137

New uses for Form 3160–5 are included at 43 CFR parts 3170, 3173, and 3174 as a result of the proposed rule. The BLM now requests that the new uses and burdens for Form 3160–5 that are described under control number 1004–0207 and 1004–0209 be moved to 1004–0137. The BLM anticipates continuation of the other IC activities as authorized by the OMB Control Numbers 1004–0207, 1004–0209, and 1004–0210.

The following describes proposed revisions of this control number.

*Proposed § 3170.30, Alternative measurement equipment and procedures.* Proposed § 3170.30 would allow an operator or manufacturer to request approval, with supporting data, for the use of alternate oil and gas measurement equipment or measurement methods. Operators or manufacturers would submit to the BLM performance data, actual field test results, laboratory test data, or any other supporting data or evidence showing the proposed alternate oil or gas measurement equipment or method would meet or exceed the objectives of minimum standards.

*Proposed § 3170.40, Variances (Form 3160–5).* Existing § 3170.6 authorizes any party that is subject to the regulations in 43 CFR part 3170 to request a variance from any of the regulations in part 3170. While § 3170.6 states that a request for a variance should be filed using the BLM's electronic system, it also allows the use of paper copies of Form 3160–5 (Sundry Notices).

*Proposed § 3173.50, Site facility diagram (Form 3160–5).* Existing § 3173.11 requires a site facility diagram for all facilities, which is a primary mechanism for monitoring operators' compliance with measurement regulations and policy. These IC activities enable the BLM to verify, among other things, royalty-free-use volumes reported by the operator on its Oil and Gas Operations Reports. The proposed rule requires each site facility diagram be submitted with a completed Sundry Notice.

Existing § 3173.11(f) specifies that after a site facility diagram has been submitted, operators have an ongoing obligation to update and amend a site facility diagram when facilities are modified; a non-Federal facility located on a Federal lease or federally approved unit or communitized area is constructed or modified; or there is a change in operator.

Proposed § 3173.50 (c)(6) would remove the requirement for an operator of a co-located production facility to include on the site facility diagram a skeleton diagram of other operator's co-located facility(ies).

Proposed § 3173.50(d)(1) would revise the timeframe for when an operator would have to submit a new, permanent site-facility diagram. The timeframe would be changed from 30 days after the BLM assigns an FMP to 60 days after the facility becomes operational. In addition, proposed § 3173.50(d)(2) would change the timeframe for when an operator would have to submit an amended site facility diagram for a modified, existing facility. That time frame would be changed from 30 days to 60 days after the facility is modified. The proposed 60-day timeframe would also apply when a non-Federal facility located on a Federal lease or a federally approved unit or communitized area is constructed or modified.

*Proposed § 3173.60, Applying for a facility measurement point number (Form 3160–5).* Existing § 3173.12 requires operators to obtain BLM approval of facility measurement points (FMPs). Existing § 3173.12(d) applies to permanent measurement facilities that come into service after January 17, 2017. Existing § 3173.12(e) applies to permanent measurement facilities in service before January 17, 2017. Both of these IC activities are one-time only. These activities assist the BLM in verifying production. All requests for an FMP must include the following:
- A complete Sundry Notice;
- The applicable Measurement Type Code specified in the BLM's Well Information System (WIS);
- For gas measurement, identification of the operator/purchaser/transporter unique station number, meter tube size or serial number, and type of secondary device;
- For oil measurement, identification of the oil tank number(s) or tank serial number(s) and size of each tank, and whether the oil was measured by LACT or CMS if not measured by tank gauge;
- Where production from more than one well will flow to the requested FMP, a list of the API well numbers associated with the FMP; and
- FMP location by land description.

This provision does not apply to temporary measurement equipment used during well testing operations. Each request must meet the requirements listed above.

The BLM, through proposed § 3173.60(d), is proposing to remove the requirement that operators list the ''station number, primary element (meter tube) size or serial number, and

type of secondary device (mechanical or electronic)'' and replace it with a requirement that operators provide ''the unique meter ID, and elevation.''

Proposed § 3173.60(d) would require the operator to identify the purchaser or transporter, and the unique meter ID. The proposed change would delete the requirement to identify whether the equipment is LACT or CMS, the associated oil tank number or serial number, and tank size.

*Proposed § 3173.70, Conditions for commingling and allocation approval (surface and downhole); and Proposed § 3173.71, Applying for commingling and allocation approval (Form 3160–5).* Existing § 3173.16 requires an operator to submit information to correct any inconsistencies or deficiencies identified by the BLM, where an operator's request for assignment of an FMP number (see 43 CFR 3173.12) includes a facility associated with a CAA existing on January 17, 2017. Both of these IC activities are one-time only.

Proposed § 3173.70 would revise the existing requirements for commingling and allocation approval. When an operator is interested in commingling a lease or a unit, they would request approval from the BLM. The operator(s) would provide a methodology acceptable to the BLM for allocation among the leases or agreements, from which production is to be commingled, with a signed agreement if there are more than one party.

Proposed § 3173.71 would require a separate Sundry Notice for off-lease measurement approval.

The proposed rule would require an applicant-certified statement of a surface-use plan of operations if new surface disturbance is proposed in a commingling application on BLM-managed land. This proposed change would reduce the application submission burden while ensuring a surface-use plan of operation has been prepared.

The proposed rule would remove the requirement that an operator submit a right-of-way grant with its application for commingling and allocation approval if any of its facilities would be located on Federal or Indian land. The proposed rule would require the operator to provide an applicant-certified statement that it already has a right-of-way grant for Federal rights-of-way.

The proposed rule would require that gas CAA applications be submitted separately from oil CAA applications.

*Proposed § 3173.74, Modification of a commingling and allocation approval (Form 3160–5).* Proposed § 3173.74(b) would add another condition that would require an operator to have the CAA reevaluated by the BLM when actual production exceeds the projected production in the commingling application. This change would not impact burden hours.

*Proposed § 3173.91, Applying for off-lease measurement.* Proposed § 3173.91 would clarify and simplify the requirements for an off-lease measurement application. Operators would be required to submit separate Sundry Notices for applications for off-lease measurement for each oil and gas FMP.

*Proposed § 3174.43, Data Submission and notification requirements (Form 3160–5).* Proposed § 3174.43(a) would revise several existing IC activities by adding a new requirement to use Form 3160–5 (Sundry Notices and Reports on Wells), a form approved by OMB under control number 1004–0137. The BLM requests the revision of control number 1004–0137 to include these uses of Sundry Notices. Existing IC activities that would be affected by the proposed rule in this way are currently authorized under control number 1004–0209:

- Documentation of Tank Calibration Table Strapping (Annual) (Proposed § 3174.82);
- Notification of LACT System Failure (Annual) (Proposed § 3174.90); and
- Approval for Slop or Waste Oil (Annual) (Proposed § 3174.180).

In addition, proposed § 3174.120, would be regulatory authorities for a new use of Sundry Notices. This new IC activity would be labeled, ''Electronic Liquid Measurement'' (ELM).

*Proposed § 3174.60, Timeframes for compliance.* In addition, proposed § 3174.60(b)(3) would include Sundry Notices in another new IC activity, *i.e.,* ''Notification of Early Compliance.'' Proposed § 3174.60(b)(3) would allow an operator to voluntarily begin full compliance with the requirements of 43 CFR subpart 3174 at any FMP prior to the mandatory compliance dates.

*Proposed § 3174.82, Oil tank calibration.* The proposed rule would retain the requirements in the existing regulations, but would add three requirements for FMP oil tank calibration. First, the tank-capacity tables would be required to be calculated for a tank-shell temperature of 60-degree F. Second, FMP tank-capacity tables would be required to be recalculated if the references gauge point is changed. Third, FMP tank calibration charts would be required to be submitted to the AO by Sundry Notice within 45 days after a calibration or recalculation of charts. The existing regulations require operators to submit tank calibration charts to the AO after calibration without specifying how they are to be submitted. The BLM needs to have the most current tank-calibration charts to provide a common tracking mechanism.

*Proposed § 3174.90, LACT system—general requirements.* Burdens related to notification of LACT system failure would be moved from OMB control number 1004–0209, and put under 1004–0137. Proposed § 3174.90(e) would require the operator to notify the AO by Sundry Notice within 30 days after repair of any LACT system failures or equipment malfunctions that may have resulted in measurement error. Existing requirements require operators to notify the AO within 72 hours of a LACT failure. Industry expressed concerns with 72 hours being difficult to comply with.

*Proposed § 3174.120, Electronic liquids measurement, ELM (secondary and tertiary device).* The IC requirements at proposed § 3174.120 would apply to any FMP with ELM equipment installed. The proposed regulation would require each ELM device to display the values and corresponding units of measurement and meter factors. The following information would have to be accessible to the BLM at the FMP without the use of data-collection equipment, laptop computers, or any special equipment:

- The make, model, and size of each sensor; and
- The make, model, range, and calibrated span of the pressure and temperature transducer used to determine gross standard volume.

The following information would have to be recorded and retained, and submitted to the BLM upon request:

- Retention of the QTR would be required on a daily (24 hour) basis, except in circumstances where batch delivery duration is less than 24 hours. In these situations, hourly data retention would be required.
- The configuration log would have to comply with the API requirements and contain and identify all constant flow parameters used in generating the QTR.
- The event log would have to comply with the API requirements and be of sufficient capacity to record all events such that the operator can retain the information under the recordkeeping requirements.
- The type and duration of any of the alarm conditions would have to be recorded.

*Proposed § 3174.154, Excessive meter factor deviation.* The proposed rule would allow the operator to provide a statement explaining that the excessive-

meter factor was not caused by a meter malfunction on a case-by-case basis.

*Proposed § 3174.160–3174.162 Measurement tickets.* The proposed rule would separate out the measurement-ticket requirement into individual sections according to the measurement type. Measurement types would include tank gauging and LACT or CMS.

*Proposed § 3174.180, Determination of oil volumes by methods other than measurement.* This proposed section would require an operator to get prior written approval from the BLM for sale or disposal of slop oil and require the operator to notify the BLM via Sundry Notice of the volume sold or disposed. This change would ensure that a tracking and auditing mechanism for spill oil, waste oil, and slop oil exists. Burdens related this requirement would be moved from OMB control number 1004–0209, and put under 1004–0137.

Proposed Revision of Control Number 1004–0207

The following is an explanation of how the proposed regulatory changes would affect the various subpart's collections of information:

*Proposed § 3170.50, Required Recordkeeping, Records Retention, and Records Submission.* Proposed § 3170.50(g) would revise the IC activity previously approved for § 3170.7(g) by adding ''land description'' to the list of information that must be included in records that are used to determine quality, quantity, disposition, and verification of production. This proposed revision would not affect the estimated burdens of control number 1004–0207.

*Proposed § 3173.31, Water-Draining Operations—Gauging.* Proposed § 3173.31 would revise and replace two IC activities previously approved for § 3173.6 (''Water Draining Operations—Data Collection'' and ''Water Draining Operations—Recordkeeping and Records Submission''). The proposed regulation would remove the list of information specified for water draining operations, and instead refer to the IC requirements in existing § 3173.41(b) (''Required Recordkeeping for Inventory and Seal Records''). Like the existing water-draining provisions, the proposed provision would assist the BLM in accurate accounting of oil and gas produced from Federal and Indian leases. This proposed revision would constitute a program change to control number 1004–0207 that would affect the estimated burdens as described above.

Proposal That Would Affect Both Control Number 1004–0209 and Control Number 1004–0210

*Alternative Measurement Equipment and Procedures.* Proposed § 3170.30 would pertain to requests to use ''alternative measurement equipment and procedures.'' Proposed § 3170.30 would apply to both oil and gas measurement, and would replace the procedures described in current § 3174.13, which applies only to the measurement of oil. Proposed § 3170.30 is not a new or separate IC activity, but rather an additional regulatory authority for other existing IC activities pertaining to measurement of oil and measurement of gas. Thus, proposed § 3170.30 would not affect the estimated burdens of control numbers 1004–0209 or 1004–0210.

Proposed Revision of Control Number 1004–0209

The following is an explanation of how the proposed regulatory changes would affect the various subparts' collections of information:

*Proposed § 3174.60, Timeframes for compliance.* Proposed § 3174.60 would include deadlines that would be one-time only because they apply only to equipment in operation before the effective date of the rule, if finalized. For some other activities, there would be both an annual burden for some respondents, and a one-time burden in the initial implementation of the rule. Finally, some of these IC activities would apply only annually. The labels for IC activities in subpart 3174 indicate whether the activities are one-time or annual. These proposed changes would not affect the estimated burdens of control number 1004–0209.

*Proposed § 3174.82, Oil tank calibration.* The proposed requirement requires submission of tank calibration tables to the BLM within 45 days after calibration. This provision ensures that BLM personnel will have the latest charts when conducting inspections or audits. The requirements related to this section would be removed from this control number and included in OMB Control Number 1004–0137.

*Proposed § 3174.83, Tank gauging—procedures.* During field operations, operators must obtain and document data required under Proposed § 3174.161. The proposed rule would clarify that field staff is required to collect only the observed data related to tank-gauging measurement tickets.

*Proposed § 3174.90, LACT systems—general requirements.* Requirements related to § 3174.7, LACT systems, would be removed from this control number and included in OMB Control Number 1004–0137. This proposed section would require the operator to notify the AO by Sundry Notice within 30 days after repair of any LACT system failures or equipment malfunctions that have resulted in measurement error.

*Proposed § 3174.101, Charging pump and motor.* This new section would require operators to install a charge pump and motor if the static head is insufficient to provide a net positive suction to achieve fluid pressure compatible with the oil fluid properties.

*Proposed § 3174.102, Sampling and mixing system.* This proposed rule seeks to replace the current requirement for testing of sampling systems, even those of the same design and construction to be individually tested. Operators expressed concern that compliance with this requirement to test all sampling systems, even those of the same design and construction, is unnecessarily burdensome and provides no benefit to the Federal Government. The BLM agrees with this assessment and seeks to change the regulation to bring it in line with other equipment standards in the regulation and allow for a single test per design. The proposed change would reduce the overall burden to operators and simplify the inspection process for the BLM.

*Proposed § 3174.103, Air Eliminator.* This new section would require operators to install an air eliminator to prevent gas or air from entering the meter and causing mismeasurement of oil.

*Proposed § 3174.104, LACT Meter.* The proposed rule would allow for other meter types on LACT units in addition to the use of positive displacement and Coriolis meters. This would not change burdens.

*Proposed § 3174.105, Electronic temperature averaging device.* The proposed rule would allow operators to use a flow computer to perform the temperature averaging. The change makes clear that the regulation allows for stand-alone temperature averaging devices or temperature transmitters working in conjunction with a flow computer. Pursuant to proposed § 3174.105(a), a stand-alone temperature-averaging device would require PMT review and BLM approval. Similarly, under proposed § 3174.105(b), a temperature transducer must have received BLM approval.

*Proposed § 3174.107, Meter Proving Connection.* This new section specifies requirements for meter-proving connections, including a leak detecting double block and bleed-valve configuration. Existing subpart 3174 does not reference meter-proving

connections or leak-detection systems and instead incorporates the API 6.1 standard, which is not sufficiently specific. Leak detection during the proving process is critical to determining an accurate meter factor.

*Proposed § 3174.110, Coriolis meter—operating requirements.* This section would provide operating requirements for the Coriolis meter—whether it is a stand-alone unit or is part of a LACT—and its transmitter. Proposed § 3174.110(a) and (b) would require Coriolis meters and Coriolis transmitters to be on the approved equipment list at *www.blm.gov.* The proposed 3174.9(b) is new and it would allow for a Coriolis transmitter to have a separate approval from a Coriolis meter. A Coriolis meter is always used in conjunction with a transmitter. The BLM believes that this proposed change will alleviate concerns that each meter and transmitter combination would require additional individual approval.

*Proposed § 3174.120, Electronic liquid measurement system, ELM (secondary and tertiary device).* This proposed section applies to flow computers (ELM systems) that are connected to Coriolis meters and their transmitters. Although this section does not have a direct corollary in existing subpart 3174, it contains many of the same requirements that appear in the existing Coriolis meter regulations at § 3174.10.

The modification to this regulation separates ELM system requirements from Coriolis meter requirements.

The existing regulation requires operators to use a tertiary device (flow computer and associated memory, calculation, and display functions) for all CMS FMPs. The proposed changes bring the software-testing requirements for electronic oil measurement in line with the requirements of electronic gas measurement in subpart 3175, which provides for uniformity in these requirements to alleviate the burdens that having two differing test protocols.

*Proposed § 3174.121, Measurement data system.* This new section would establish that measurement data systems (MDS) must be approved by the BLM for use at an FMP. MDS are designed to gather, edit, store, and report measurement data. By requiring that MDSs be BLM approved, industry would not have any questions or confusion when selecting an MDS system for use at an FMP.

*Proposed § 3174.140, Temporary measurement.* The BLM is proposing to add a new § 3174.140 to address temporary measurement. A temporary oil meter would have to meet all the requirements of an FMP with some modified requirements based on the limited timeframe the meter will be on the location (for example, proving requirements).

*Proposed § 3174.158, Meter proving reporting requirements.* The proposed rule would provide a detailed list of specific data required for reporting, and would specify a required calculation sequence to be followed in the meter factor calculation. The BLM believes that providing a detailed list of required reporting data would remove any confusion about the exact data that is required on the report.

Proposed § 3174.158(c) would change the proving-report submission requirements of existing § 3174.11(i)(3) from requiring an operator to submit each report within 14 days after a meter proving to only requiring an operator to submit a proving report when requested by the AO. This change has been proposed to make this regulation less burdensome to industry while retaining the BLM's audit capabilities for verifying proving reports.

*Proposed § 3174.160, Measurement tickets.* The proposed rule would separate out the measurement-ticket requirements into individual sections according to the measurement type, tank gauging, and LACT or CMS. This proposed rule would retain the existing requirement that measurement tickets be made available upon request of the AO. This requirement falls under OMB Control Number 1004–0137.

Proposed Revision of Control Number 1004–0210

The following is an explanation of how the proposed regulatory changes would affect the various subparts' collections of information:

*Proposed § 3175.40, Measurement equipment.* The proposed rule would revise and replace some of these provisions pertaining to gas-measurement equipment. The BLM is proposing these changes in order to streamline and better organize the regulations. Proposed § 3175.40 would replace the following existing regulations and associated IC activities:

- 43 CFR 3175.43 and 3175.130 (Transducers—Test Data Collection and Submission for Existing Makes and Models; One-Time);
- 43 CFR 3175.43 and 3175.130 (Transducers—Test Data Collection and Submission for Future Makes and Models; Annual);
- 43 CFR 3175.44 and 3175.140 (Flow-Computer Software—Test Data Collection and Submission for Existing Makes and Models; One-Time);
- 43 CFR 3175.44 and 3175.140 (Flow-Computer Software—Test Data Collection and Submission for Future Makes and Models; Annual);
- 43 CFR 3175.46 (Isolating Flow Conditioners—Test Data Collection and Submission for Existing Makes and Models; One-Time);
- 43 CFR 3175.47 (Differential Primary Devices Other Than Flange-Tapped Orifice Plates—Test Data Collection and Submission for Existing Makes and Models; One-Time);
- 43 CFR 3175.48 (Linear Measurement Devices—Test Data Collection and Submission for Existing Makes and Models; One-Time);
- 43 CFR 3175.48 (Linear Measurement Devices—Test Data Collection and Submission for Future Makes and Models; Annual);
- 43 CFR 3175.49 (Accounting Systems—Test Data Collection and Submission for Existing Makes and Models; One-Time); and
- 43 CFR 3175.49 (Accounting Systems—Test Data Collection and Submission for Future Makes and Models; Annual).

*Proposed § 3175.41, Approved measurement equipment.* Proposed § 3175.41 would provide that the following types of equipment are automatically approved for use if they meet standards prescribed in the regulations at subpart 3175:

- Flange-tapped orifice plates (existing § 3175.41);
- Chart recorders for low- and very-low-volume FMPs (existing § 3175.42); and
- Gas chromatographs (existing § 3175.45).

In addition, proposed § 3175.41 would provide that the following types of equipment would be automatically approved if they meet standards prescribed in the regulations at subpart 3175:

- Transducers, when used at low- and very-low volume FMPs; and (existing §§ 3175.43 and 3175.130); and
- Flow-computer software, when used at low- and very-low volume FMPs (existing §§ 3175.44 and 3175.140).

The existing regulations require BLM approval of all makes and models of transducers and flow-computer software developed and used at FMPs after January 17, 2017 (*i.e.,* the effective date of the existing rule). Proposed § 3175.41 would reduce the number of makes and model of transducers and flow-computer software that would be subject to these IC activities. BLM proposes to include a new form entitled, ''Equipment Application Coversheet.'' Operators would be required to use BLM-approved measurement equipment. However, manufacturers of equipment would need to provide data

on testing equipment using the new form. The existing regulations explain that an oil and gas operator may have applied for review and approval because the equipment was old and no longer supported by the manufacturer. The proposed rule provides an exemption for the older equipment. Therefore, it's unlikely the BLM will receive data from an operator.

*Proposed § 3175.60, Timeframes for compliance.* Subpart 3175, as revised by the proposed rule, would include timeframes for compliance. These timeframes, at proposed 43 CFR 3175.60, would include deadlines that would be one-time-only because they apply only to equipment in operation before the effective date of the rule, if finalized. For some other activities, there would be both an annual burden for some respondents, and a one-time burden in the initial implementation of the rule. Finally, some of these IC activities would apply only annually. The labels for IC activities in subpart 3175 indicate whether the activities are one-time or annual. These proposed changes would not affect the estimated burdens of control number 1004–0210.

*Proposed § 3175.80, Flange-tapped orifice plate (primary device).* Proposed § 3175.80 would revise existing IC activities pertaining to inspections and verifications of primary devices. Some of these information collection activities are usual and customary because they are required by gas sales contracts and/or industry standards. To the extent they are usual and customary, they are not ''burdens'' under the PRA (see 5 CFR 1320.3(b)(2)). A description of what is considered usual and customary is given for each applicable activity in the supporting statement.

The proposed regulation would revise the following existing IC activities:

- Schedule of Basic Meter Tube Inspection;
- Basic Inspection of Meter Tubes—Data Collection and Submission;
- Detailed Inspection of Meter Tubes—Data Collection and Submission; and
- Request for Extension of Time for a Detailed Meter Tube Inspection.

Proposed § 3175.80(j) would add an initial basic meter-tube inspection that would require operators to perform a basic meter-tube inspection within 1 year after installation of a very-high-volume FMP and within 2 years after installation of a high-volume FMP. This requirement would only apply to FMPs installed after the effective date of the final rule.

Proposed § 3175.80(k) would require operators to perform a basic meter-tube inspection every 5 years at both high- and very-high-volume FMPs, and every 10 years at low-volume FMPs. Very-low volume FMPs would continue to be exempt. The BLM would also add a requirement for an initial basic meter-tube inspection for high- and very-high-volume FMPs.

Under proposed § 3175.80(k)(3), provisions would be added to identify a required course of action based on the results of the basic meter-tube inspection. If the only issue identified on a high- or very-high-volume FMP is an obstruction, proposed paragraph (i) would only require the operator to remove the obstruction; a detailed inspection would no longer be required. Proposed paragraph (ii) would only require the operator to clean the meter tube at low-volume FMPs if the basic meter-tube inspection identified a buildup of foreign substances. If the basic meter-tube inspection at a high- or very-high-volume FMP revealed pitting or a buildup of foreign substances, then the operator would have to perform a detailed meter-tube inspection.

*Proposed § 3175.92, Verification and calibration of mechanical recorders.* Proposed § 3175.92(e)(1) would change the amount of time an operator has to notify the BLM prior to performing a verification after installation or following a repair. This rule would change the timeframe to 1 business day. The existing regulation requires a minimum of a 72-hour notice prior to performing the verification. The change to 1 business day would allow operators to provide a more accurate notification.

Proposed § 3175.92(e)(2) would modify the timeframe for notifying the BLM of routine verification. Currently, operators must notify the AO at least 72 hours before performing a verification or submit a monthly or quarterly schedule of verifications. The BLM is proposing to modify the requirement to allow operators to either provide at least 72-hours' notice to the AO or submit a list of FMPs that the operator plans to verify over the next month or next quarter. The operator would no longer have to notify the BLM or submit a schedule of when each FMP would be verified. This list would show all verifications planned for that month or quarter, but not the specific day for each location.

*Proposed § 3175.101, Installation and operation of electronic gas measurement systems.* Existing and proposed § 3175.101 define the installation and operation requirements of EGM systems. The proposed rule would clarify parts of the requirements for the connection of EGM devices and modify the on-site information requirements.

Proposed new § 3175.101(b)(4) would modify the existing requirement that operators display the software version at the FMP location. The proposed language would limit that requirement to high- and very-high volume FMPs. The BLM feels that the current requirement imposes an undue burden on operators.

Proposed new § 3175.101(b)(6) would modify a provision that requires operators to either display previous-period averages for differential pressure, static pressure, and temperature, or post a QTR on-site that is no more than 31 days old. The BLM is proposing a modification to the QTR posting requirement in the existing regulations. Instead of requiring operators to post recent QTRs at every location that does not have a flow computer capable of displaying the required average values, the BLM would require operators to submit the most recent QTR when the BLM requests it.

Proposed § 3175.101(c)(3) would allow for operators to provide either the FMP elevation or the atmospheric pressure at the FMP. The BLM is proposing to allow atmospheric pressure to be posted at the FMP instead of meter elevation because either value will allow the BLM to verify the flow computer.

Proposed § 3175.101(c)(13) would add a requirement that the operator post the last meter-tube inspection date. The BLM is proposing to add this requirement in order to allow BLM inspectors to verify that the operator is inspecting the meter tube at the frequency required under proposed § 3175.80(l) and (m). The operator would post either the last basic meter-tube inspection date or the last detailed meter-tube inspection date, whichever is more recent.

*Proposed § 3175.102, Verification and calibration of electronic gas measurement system.* Existing and proposed § 3175.102 define the verification and calibration requirements for EGM systems. The proposed update would modify and clarify this section, with a particular focus on the methods used to determine atmospheric pressure, verification frequency, stability and drift, reporting requirements. The proposed rule would also address confusion with respect to notification requirements.

*Proposed § 3175.104, Logs and records.* Existing § 3175.104 defines the requirements for records and logs pertaining to several categories of equipment. The BLM has determined that the level of detail required in the current regulation is beyond the capabilities of many operators' flow computers. The proposed regulation would modify the existing regulation to

allow for the use of existing equipment while preserving accountability requirements.

Proposed § 3175.104 would require the operator to retain, and submit to the BLM upon request, quantity transaction records (QTRs), configuration logs, event logs, and an alarm log, all of which comply with standards of the American Petroleum Institute (which are incorporated by reference in the proposed rule).

*Proposed § 3175.113, Spot samples—general requirements.* The BLM is proposing to modify this requirement to allow operators to submit a list of FMPs that the operator plans to sample over the next month or next quarter. The operator would no longer have to notify the BLM or submit a schedule of when each FMP would be sampled. The BLM believes the list of wells an operator intends to sample provides enough information to prioritize which gas samplings the BLM should witness.

Proposed § 3175.113(c)(3) would allow operators to seek approval from the PMT for alternative methods of cleaning sample cylinders.

Under the proposed rule, the BLM would remove § 3175.113(d)(5) and (d)(6) of the existing regulations and replace them with different requirements (§ 3175.113(d)(5) through (d)(8)). Operators have expressed concern that the existing requirement not only increases their documentation burdens, but can also be difficult, if not impossible, to achieve. In 2018, an industry group developed a standard operating procedure (SOP) that contained a number of objective measures to help ensure quality control when using a portable GC. The BLM recommended the use of this SOP in Washington Office Instruction Memorandum (IM) 2018–069. The proposed rule would incorporate many of the recommendations that were included in the SOP.

*Proposed § 3175.115, Spot samples—frequency.* The BLM would delete existing § 3175.115(b)(5), which requires operators to install composite samplers or on-line GCs at very-high-volume FMPs when the BLM determines that the required level of average annual heating value uncertainty at an FMP cannot be achieved through spot sampling. The BLM is proposing to delete this requirement because it believes that the proposed increase in average annual heating value uncertainty would render this requirement largely unnecessary.

Proposed § 3175.115(d) would increase the amount of time operators would have to install a composite sampling system or on-line GC from 30 days after the due date of the next sample to 90 days after the due date of the next sample. This proposed change is based on industry concerns that the lead-time operators need to plan for, order, and install on-line GCs or composite sampling systems is commonly greater than 30 days. During this 90-day period an operator would not have to take spot samples.

*Proposed § 3175.116, Composite sampling methods.* Proposed § 3175.116(c) would add a requirement that sample cylinders used in composite sampling systems comply with the general spot-sample requirements under § 3175.113(c). The BLM believes that the omission of these requirements for composite sample systems was an oversight and will add a slight increase in burdens to industry, although they represent common industry best practice. To reduce unnecessary burden on industry while still meeting the desired intent of a more detailed analysis, the BLM proposes to only require $C_9$+ analysis. This change reduces the overall number of responses for this requirement.

*Proposed § 3175.118, Gas chromatograph requirements.* Under existing § 3175.118(e) operators are required to perform extended analyses in accordance with GPA 2286–14. This proposed rule would remove this requirement.

*Proposed § 3175.120, Gas analysis report requirements.* Proposed § 3175.120(a)(18) would remove the requirement that the gas analysis report must show the un-normalized mole percent for each component analyzed and instead only require the sum of the un-normalized mole percents from all analyzed components. The BLM does not use this information and collecting it is an unnecessary burden on operators.

*Proposed § 3175.125, Calculation of heating value and volume.* Under proposed § 3175.125(b)(1), the existing requirement for calculating and reporting an average heating value would only apply if a lease, unit PA, or CA has more than one FMP that doesn't yet have an FMP number. The BLM proposes this change to reduce unnecessary reporting burdens on industry by removing the requirement to report the average heating value for a lease, unit PA, or CA once the BLM assigns individual FMP numbers.

*Proposed § 3175.140, Temporary measurement.* The BLM is proposing to add a new section under § 3175.140 to address temporary measurement. Temporary measurement is defined in 43 CFR 3170.10 as a meter that is in place for less than 3 months. Temporary measurement typically applies to a gas meter that is part of a measurement skid used to measure the oil and gas from a newly drilled well before the permanent measurement facility is installed. The existing rule does not address temporary measurement.

Under proposed § 3175.140, a temporary gas meter would have to meet all the requirements of an FMP except for the routine verifications required for mechanical recorders and EGM systems, basic meter-tube inspections, and detailed meter-tube inspections.

Some of the recordkeeping requirements in the proposed rule are ''usual and customary'' within the meaning of 5 CFR 1320.3(b)(2), since they are commonly found in gas sales contracts and/or industry standards. Therefore, they are not among the ''burdens'' that must be disclosed under the Paperwork Reduction Act. Some other proposed activities in the regulations are usual and customary only in part. The burdens of those activities are analyzed to the extent they are not usual and customary.

As part of our continuing effort to reduce paperwork and respondent burdens, we invite the public and other Federal agencies to comment on any aspect of this information collection, including:

(1) Whether or not the collection of information is necessary for the proper performance of the functions of the agency, including whether or not the information will have practical utility;

(2) The accuracy of our estimate of the burden for this collection of information, including the validity of the methodology and assumptions used;

(3) Ways to enhance the quality, utility, and clarity of the information to be collected; and

(4) Ways to minimize the burden of the collection of information on those who are to respond, including through the use of appropriate automated, electronic, mechanical, or other technological collection techniques or other forms of information technology, *e.g.,* permitting electronic submission of response.

Send your comments and suggestions on this information collection by the date indicated earlier.

Written comments and recommendations for the proposed information collection should be sent on or before October 13, 2020 to *www.reginfo.gov/public/do/PRAMain.* Find the particular information collection by selecting ''Currently under Review—Open for Public Comments'' or by using the search function. If you submit comments to OMB on the IC activities in this proposed rule, you

should provide the BLM with a copy at one of the street addresses shown earlier in this proposed rule so that we can summarize all written comments and address them in the final rulemaking. Please do not submit to OMB comments that do not pertain to the proposed rule's IC burdens. The BLM is not obligated to consider or include in the Administrative Record for the final rule any comments, which do not relate to the information collection burdens, that you improperly direct to OMB.

*National Environmental Policy Act*

The BLM has prepared a draft EA to determine whether this proposed rule would have a significant impact on the quality of the human environment under the National Environmental Policy Act of 1969 (NEPA) (42 U.S.C. 4321 *et seq.*). The draft EA will be shared with the public during the public comment period on the proposed rule. The BLM will respond to substantive comments on the EA. If the final EA supports the issuance of a Finding of No Significant Impact for the rule, the preparation of an environmental impact statement pursuant to the NEPA would not be required.

The draft EA has been placed in the file for the BLM's Administrative Record for the rule at the address specified in the **ADDRESSES** section. The EA has also been posted in the docket for the rule on the Federal eRulemaking Portal: *https://www.regulations.gov.* In the Searchbox, enter ''RIN 1004–AE59'', click the ''Search'' button, open the Docket Folder, and look under Supporting Documents. The BLM invites the public to review the draft EA and suggests that anyone wishing to submit comments on the EA should do so in accordance with the instructions contained in the ''Public Comment Procedures'' section earlier.

*Actions Concerning Regulations That Significantly Affect Energy Supply, Distribution, or Use (Executive Order 13211)*

This proposed rule is not a significant energy action under the definition in Executive Order 13211. A statement of Energy Effects is not required.

Section 4(b) of Executive Order 13211 defines a ''significant energy action'' as ''any action by an agency (normally published in the **Federal Register**) that promulgates or is expected to lead to the promulgation of a final rule or regulation, including notices of inquiry, advance notices of rulemaking, and notices of rulemaking: (1)(i) That is a significant regulatory action under Executive Order 12866 or any successor order, and (ii) Is likely to have a significant adverse effect on the supply, distribution, or use of energy; or (2) That is designated by the Administrator of the Office of Information and Regulatory Affairs as a significant energy action.''

The BLM reviewed the proposed rule, and we do not consider it to be a ''significant energy action'' as defined in Executive Order 13211. The BLM has found that the proposed rule would not be economically significant under Executive Order 12866. The proposed rule would revise certain requirements in the 2016 Final Rules in a manner that would reduce compliance burdens. While these savings are certainly beneficial to industry from both an operational and financial standpoint, the BLM finds that they are relatively minor when compared to industry net profits, and the changes are not expected to have an effect on the supply, distribution, or use of energy. Further, the Administrator of the Office of Information and Regulatory Affairs did not designate the proposed rule as a significant energy action.

*Clarity of This Regulation (Executive Orders 12866, 12988, and 13563)*

We are required by Executive Orders 12866 (section 1(b)(12)), 12988 (section 3(b)(1)(B)), and 13563 (section 1(a)), and by the Presidential Memorandum of June 1, 1988, to write all rules in plain language. This means that each rule must:

(a) Be logically organized;

(b) Use the active voice to address readers directly;

(c) Use common, everyday words and clear language rather than jargon;

(d) Be divided into short sections and sentences; and

(e) Use lists and tables wherever possible.

If you feel that we have not met these requirements, send us comments by one of the methods listed in the **ADDRESSES** section. To better help the BLM revise the rule, your comments should be as specific as possible. For example, you should tell us the numbers of the sections or paragraphs that you find unclear, which sections or sentences are too long, the sections where you feel lists or tables would be useful, etc.

*Authors*

The principal authors of this proposed rule are: Michael McLaren, Richard Estabrook (Retired), Beth Poindexter, Stormy Phillips (Contractor), Michael Ford, and Barbara Sterling of the BLM Washington Office; assisted by Abdelgadir Elmadani of the BLM Eastern States Office, Gail Clayton of the BLM Farmington, New Mexico Field Office, Christopher DeVault of the BLM Montana State Office, Laura Lozier of the BLM Lander, Wyoming Field Office, Noell Sturdevant and Thomas Zelenka of the BLM New Mexico State Office, Matthew Wokosin of the BLM Dickinson, North Dakota Field Office, Faith Bremner of the BLM's Division of Regulatory Affairs, Michael Wade, Gregory Muehl and James Tichenor of the BLM Washington Office and by the Department of the Interior's Office of the Solicitor.

**List of Subjects in 43 CFR Part 3170**

Administrative practice and procedure, Flaring, Government contracts, Incorporation by reference, Indians-lands, Immediate assessments, Mineral royalties, Oil and gas exploration, Oil and gas measurement, Public lands—mineral resources, Reporting and record keeping requirements, Royalty-free use, Venting.

**Casey Hammond,**

*Principal Deputy Assistant Secretary, Exercising the Authority of the Assistant Secretary, Land and Minerals Management.*

**43 CFR Chapter II**

For the reasons set out in the preamble, the Bureau of Land Management proposes to amend 43 CFR part 3170 as follows:

## PART 3170—ONSHORE OIL AND GAS PRODUCTION

■ 1. The authority citation for part 3170 continues to read as follows:

**Authority:** 25 U.S.C. 396d and 2107; 30 U.S.C. 189, 306, 359, and 1751; and 43 U.S.C. 1732(b), 1733, and 1740.

■ 2. Revise subpart 3170 to read as follows:

### Subpart 3170—Onshore Oil and Gas Production: General

Sec.
3170.1 Authority.
3170.2 Scope.
3170.10 Definitions and acronyms.
3170.20 Prohibitions against by-pass and tampering.
3170.30 Alternative measurement equipment and procedures.
3170.40 Variances.
3170.50 Required recordkeeping, records retention, and records submission.
3170.60 Appeal procedures.
3170.70 Enforcement.

### Subpart 3170—Onshore Oil and Gas Production: General

#### § 3170.1 Authority.

The authorities for promulgating the regulations in this part are the Mineral Leasing Act, 30 U.S.C. 181 *et seq.;* the Mineral Leasing Act for Acquired Lands, 30 U.S.C. 351 *et seq.;* the Federal Oil and Gas Royalty Management Act,

30 U.S.C. 1701 *et seq.;* the Indian Mineral Leasing Act, 25 U.S.C. 396a *et seq.;* the Act of March 3, 1909, 25 U.S.C. 396; the Indian Mineral Development Act, 25 U.S.C. 2101 *et seq.;* and the Federal Land Policy and Management Act, 43 U.S.C. 1701 *et seq.* Each of these statutes gives the Secretary the authority to promulgate necessary and appropriate rules and regulations governing Federal and Indian (except Osage Tribe) oil and gas leases. See 30 U.S.C. 189; 30 U.S.C. 359; 25 U.S.C. 396d; 25 U.S.C. 396; 25 U.S.C. 2107; and 43 U.S.C. 1740. Under Secretary's Order Number 3087, dated December 3, 1982, as amended on February 7, 1983 (48 FR 8983), and the Departmental Manual (235 DM 1.1), the Secretary has delegated regulatory authority over onshore oil and gas development on Federal and Indian (except Osage Tribe) lands to the BLM. For Indian leases, the delegation of authority to the BLM is reflected in 25 CFR parts 211, 212, 213, 225, and 227. In addition, as authorized by 43 U.S.C. 1731(a), the Secretary has delegated to the BLM regulatory responsibility for oil and gas operations on Indian lands. 235 DM 1.1.K.

**§ 3170.2 Scope.**

The regulations in this part apply to:

(a) All Federal onshore and Indian oil and gas leases (other than those of the Osage Tribe);

(b) Indian Mineral Development Act (IMDA) agreements for oil and gas, unless specifically excluded in the agreement or unless the relevant provisions of the rule are inconsistent with the agreement;

(c) Leases and other business agreements for the development of tribal energy resources under a Tribal Energy Resource Agreement entered into with the Secretary, unless specifically excluded in the lease, other business agreement, or Tribal Energy Resource Agreement;

(d) State or private tracts committed to a federally approved unit or communitization agreement (CA) as defined by or established under 43 CFR subpart 3105 or 43 CFR part 3180;

(e) All onshore facility measurement points where oil or gas produced from the leases or agreements identified earlier in this section is measured; and

(f) Measurement points on BLM-managed gas storage agreements.

**§ 3170.10 Definitions and acronyms.**

(a) As used in this part, the term:

*Alarm log* means a log for recording any system alarm, user-defined alarm, or error conditions (such as out-of-range temperature or pressure) that occur. This includes a description of each alarm condition and the times the condition occurred and cleared.

*Allocated or allocation* means a method or process by which production is measured at a central point and apportioned to the individual lease, or unit Participating Area (PA), or CA from which the production originated.

*Audit trail* means all source records necessary to verify and recalculate the volume and quality of oil or gas production measured at a facility measurement point (FMP) and reported to the Office of Natural Resources Revenue (ONRR).

*Authorized officer* (AO) has the same meaning as defined in 43 CFR 3000.0–5.

*Averaging period* means the previous 12 months or the life of the meter, whichever is shorter. For Facility Measurement Points (FMPs) that measure production from a newly drilled well, the averaging period excludes production from that well that occurred in or before the first full month of production. (For example, if an oil FMP and a gas FMP were installed to measure only the production from a new well that first produced on April 10, the averaging period for this FMP would not include the production that occurred in April (partial month) and May (full month) of that year.)

*Bias* means a shift in the mean value of a set of measurements away from the true value of what is being measured.

*By-pass* means any piping or other arrangement around or avoiding a meter or other measuring device or method (or component thereof) at an FMP that allows oil or gas to flow without accountability. Equipment that permits the changing of the orifice plate of a gas meter without bleeding the pressure off the gas meter run (*e.g.,* senior fitting) is not a by-pass. Piping around a meter with a double block and bleed valve (or a series of valves that ensure valve integrity) that must be effectively sealed under § 3173.20, could be approved by the AO or be part of a PMT-approved process and would not be a by-pass.

*Commingling,* for production accounting and reporting purposes, means combining, before the point of royalty measurement, production from more than one lease, unit PA, or CA, or production from one or more leases, unit PAs, or CAs with production from State, local governmental, or private properties that are outside the boundaries of those leases, unit PAs, or CAs. Combining production from multiple wells within a single lease, unit PA, or CA, or combining production downhole from different geologic formations within the same lease, unit PA, or CA, is not considered commingling for production accounting purposes.

*Communitization agreement* (CA) means an agreement to combine a lease, or a portion of a lease that cannot otherwise be independently developed and operated in conformity with an established well spacing or well development program, with other tracts for purposes of cooperative development and operations.

*Communitized area* means the area committed to a BLM approved communitization agreement.

*Condition of Approval (COA)* means a site-specific requirement included in the approval of an application that may limit or modify the specific actions covered by the application. Conditions of approval may minimize, mitigate, or prevent impacts to public lands or resources.

*Configuration log* means a record that contains and identifies all selected flow parameters used in the generation of a quantity transaction record.

*Days* means consecutive calendar days, unless otherwise indicated.

*Event log* means an electronic record of all exceptions and changes to the flow parameters contained within the configuration log that have an impact on a quantity transaction record.

*Facility* means:

(i) A site and associated equipment used to process, treat, store, or measure production from or allocated to a Federal or Indian lease, unit PA, or CA that is located upstream of or at (and including) the approved point of royalty measurement; and

(ii) A site and associated equipment used to store, measure, or dispose of produced water that is located on a lease, unit, or communitized area.

*Facility measurement point (FMP)* means a point where oil or gas produced from a Federal or Indian lease, unit PA, CA, or gas storage agreement involving production of native gas or oil is measured and the measurement affects the calculation of the volume or quality of production on which royalty is owed or a point where fluid is measured on a Federal or Indian storage agreement and the measurement affects the calculation of the volume or quality of fluid on which injection and withdrawal fees are owed. An FMP includes all measurement points relevant to determining the allocation of production to Federal or Indian leases, unit PAs, or CAs. However, allocation facilities that are part of a commingling and allocation approval under § 3173.71 or that are part of a commingling and allocation approval approved after July 9, 2013, are not FMPs. An FMP must be located on the lease, unit, or

communitized area unless the BLM approves measurement off the lease, unit, or CA (see 43 CFR 3162.7–2, 3162.7–3, 3173.71, 3173.72, 3173.92, and 3173.93). An FMP cannot be located at the tailgate of a gas processing plant located off the lease, unit, or CA. Measurement points for flared volumes are not FMPs.

*FMP number* means a number assigned by the BLM to the FMP after review of an FMP application.

*Gas* means any fluid, either combustible or noncombustible, hydrocarbon or non-hydrocarbon, that has neither independent shape nor volume, but tends to expand indefinitely and exists in a gaseous state under metered temperature and pressure conditions.

*Incident of Noncompliance (INC)* means a BLM-issued documentation that identifies violations and notifies the recipient of required corrective actions.

*Land description* means a location surveyed in accordance with the U.S. Department of the Interior's Manual of Surveying Instructions (2009), as amended, that includes the quarter-quarter section, section, township, range, and principal meridian, or other authorized survey designation acceptable to the AO, such as metes-and-bounds, or latitude and longitude.

*Lease* has the same meaning as defined in 43 CFR 3160.0–5.

*Lessee* has the same meaning as defined in 43 CFR 3160.0–5.

*Measurement data system (MDS)* means a system that captures and stores source records from the flow computer at an FMP. The MDS is used by operators to validate, balance, and report volume and quality. An MDS does not include Supervisory Control and Data Acquisition (SCADA) systems.

*NIST traceable* means an unbroken and documented chain of comparisons relating measurements from field or laboratory instruments to a known standard maintained by the National Institute of Standards and Technology (NIST).

*Notice to lessees and operators (NTL)* has the same meaning as defined in 43 CFR 3160.0–5.

*Notify* means to contact by any method including, but not limited to, electronically (*e.g.,* email), in person, by telephone, by Form 3160–5 (Sundry Notice), by letter.

*Off-lease measurement* means measurement at an FMP that is not located on the lease, unit, or communitized area from which the production came.

*Oil* means a mixture of hydrocarbons that exists in the liquid phase at the temperature and pressure at which it is measured. Condensate is considered to be oil for purposes of this part. Gas liquids extracted from a gas stream upstream of the approved point of royalty measurement are considered to be oil for purposes of this part.

(i) *Clean oil or Pipeline oil* means oil that is of such quality that it is acceptable to normal purchasers.

(ii) *Slop oil* means oil that is of such quality that it is not acceptable to normal purchasers and is usually sold to oil reclaimers. Oil that can be made acceptable to normal purchasers through special treatment that can be economically provided at existing or modified facilities or using portable equipment at or upstream of the FMP is not slop oil.

(iii) *Waste oil* means oil that has been determined by the AO or authorized representative to be of such quality that it cannot be treated economically and put in a marketable condition with existing or modified lease facilities or portable equipment, cannot be sold to reclaimers, and has been determined by the AO to have no economic value.

*Operator* has the same meaning as defined in 43 CFR 3160.0–5.

*Participating area (PA)* has the same meaning as defined in 43 CFR 3180.0–5.

*Permanent measurement facility* means all equipment used on-site for 3 months or longer, that is used for the purposes of determining the quantity or quality of production, or for the storage of production, and which meets the definition of an FMP under this section.

*Point of royalty measurement* means a BLM-approved FMP at which the volume and quality of oil or gas which is subject to royalty is measured. The point of royalty measurement is to be distinguished from meters that determine only the allocation of production to particular leases, unit PAs, CAs, or non-Federal and non-Indian properties. The point of royalty measurement is also known as the point of royalty settlement.

*Production* means oil or gas removed from a well bore and any products derived therefrom.

*Production Measurement Team (PMT)* means a panel of members from the BLM (which may include BLM-contracted experts) that reviews changes in industry measurement technology, methods, and standards to determine whether regulations should be updated, and provides guidance on measurement technologies and methods not addressed in current regulation.

*Purchaser* means any person or entity who legally takes ownership of oil or gas in exchange for financial or other consideration.

*Source record* means any unedited and original record, document, or data that is used to determine volume and quality of production, regardless of format or how it was created or stored (*e.g.,* paper or electronic). It includes, but is not limited to, raw and unprocessed data (*e.g.,* instantaneous and continuous information used by flow computers to calculate volumes); gas charts; measurement tickets; calibration, verification, prover, and configuration reports; pumper and gauger field logs; volume statements; event logs; seal records; and gas analyses.

*Statistically significant* describes a difference between two data sets that exceeds the threshold of significance.

*Tampering* means any deliberate adjustment or alteration to a meter or measurement device, appropriate valve, or measurement process that could introduce bias into the measurement or affect the BLM's ability to independently verify volumes or qualities reported.

*Temporary measurement facility* means an FMP in place for less than 3 months. A temporary measurement facility will not receive an FMP number.

*Threshold of significance* means the maximum difference between two data sets (a and b) that can be attributed to uncertainty effects. The threshold of significance is determined as follows:

$$T_s = \sqrt{U_a^2 + U_b^2}$$

where:

$T_s$ = Threshold of significance, in percent

$U_a$ = Uncertainty (95 percent confidence) of data set a, in percent

$U_b$ = Uncertainty (95 percent confidence) of data set b, in percent

*Total observed volume (TOV)* means the total measured volume of all oil, sludges, sediment and water, and free water at the measured or observed temperature and pressure.

*Transporter* means any person or entity who legally moves or transports oil or gas from an FMP.

*US well number* means a unique, permanent, numeric identifier assigned to each well drilled for oil and gas in the United States, which includes the completion code. The US well number replaces the old API well number.

*Uncertainty* means the statistical range of error that can be expected between a measured value and the true value of what is being measured. Uncertainty is determined at a 95 percent confidence level for the purposes of this part.

*Unit* means the land within a unit area as defined in 43 CFR 3180.0–5.

*Unit PA* means the unit participating area, if one is in effect, the exploratory unit if there is no associated participating area, or an enhanced recovery unit.

*Variance* means an approved alternative to a provision or standard of a regulation, Onshore Oil and Gas Order, or NTL.

(b) As used in this part, the following additional acronyms apply:

*API* means American Petroleum Institute.

*BLM* means the Bureau of Land Management.

*Btu* means British thermal unit.

*CMS* means Coriolis Measurement System.

*LACT* means lease automatic custody transfer.

*OGOR* means Oil and Gas Operations Report (Form ONRR–4054 or any successor report).

*ONRR* means the Office of Natural Resources Revenue, U.S. Department of the Interior, and includes any successor agency.

*S&W* means sediment and water.

*WIS* means Well Information System or any successor electronic filing system.

**§ 3170.20 Prohibitions against by-pass and tampering.**

(a) All by-passes are prohibited.

(b) Tampering with any measurement device, component of a measurement device, or measurement process is prohibited.

(c) Any by-pass or tampering with a measurement device, component of a measurement device, or measurement process may, together with any other remedies provided by law, result in an assessment of civil penalties, pursuant to 30 U.S.C. 1719 and 43 CFR 3163.2, for knowingly or willfully:

(1) Taking, removing, transporting, using, or diverting oil or gas from a lease site without valid legal authority; or

(2) Preparing, maintaining, or submitting false, inaccurate, or misleading reports, records, or information.

**§ 3170.30 Alternative measurement equipment and procedures.**

(a) Any operator or manufacturer may request approval for the use of alternate oil or gas measurement equipment or measurement methods. Any operator or manufacturer requesting such approval must submit to the BLM performance data, actual field test results, laboratory test data, or any other supporting data or evidence requested by the BLM demonstrating that the proposed alternate oil or gas measurement equipment or method would meet or exceed the objectives of the applicable minimum standards of part 3170 and would not affect royalty income, production accountability, or site security.

(b) The PMT will review the submitted data to ensure that the alternate oil and gas measurement equipment or method meets the standards of part 3170. The PMT will make a recommendation, including conditions of approval, to the BLM to approve use of the equipment or method that the PMT determines meets the standards of part 3170. If the PMT recommends, and the BLM approves, new measurement equipment or methods, the BLM will post the make, model, range or software version (as applicable), or method on the BLM website *www.blm.gov* as being appropriate for use at an FMP for oil or gas measurement without further approval by the BLM, subject to any conditions of approval identified by the PMT and approved by the BLM.

(c) The procedures for requesting and granting a variance under § 3170.40 may not be used as an avenue for approving new measurement technology, methods, or equipment. Approval of alternative oil or gas measurement equipment or methods must be obtained by following the requirements of this section.

**§ 3170.40 Variances.**

(a) Any party subject to a requirement of a regulation in this part may request a variance from that requirement.

(1) A request for a variance must include the following:

(i) Identification of the specific requirement from which the variance is requested;

(ii) Identification of the length of time for which the variance is requested, if applicable;

(iii) An explanation of the need for the variance;

(iv) A detailed description of the proposed alternative means of compliance;

(v) A showing that the proposed alternative means of compliance will produce a result that meets or exceeds the objectives of the applicable requirement for which the variance is requested; and

(vi) The FMP number(s) for which the variance is requested, if applicable.

(2) A request for a variance must be submitted as a separate document from any plans or applications. A request for a variance that is submitted as part of a master development plan, application for permit to drill, right-of-way application, or application for approval of other types of operations, rather than submitted separately, will not be considered. Approval of a plan or application that contains a request for a variance does not constitute approval of the variance. A separate request for a variance may be submitted simultaneously with a plan or application. For plans or applications that are contingent upon the approval of the variance request, the BLM encourages the simultaneous submission of the variance request and the plan or application.

(3) The party requesting the variance must submit a Form 3160–5, Sundry Notices and Reports on Wells (Sundry Notice) electronically to the BLM office having jurisdiction over the lease, unit, or CA, using WIS, unless the submitter:

(i) Is a small business, as defined by the U.S. Small Business Administration; and

(ii) Does not have access to the internet.

(4) The AO, after considering all relevant factors, may approve the variance, or approve it with COAs, only if the AO determines that:

(i) The proposed alternative means of compliance meets or exceeds the objectives of the applicable requirement(s) of the regulation;

(ii) Approving the variance will not adversely affect royalty income and production accountability; and

(iii) Issuing the variance is consistent with maximum ultimate economic recovery, as defined in 43 CFR 3160.0–5.

(5) The decision whether to grant or deny the variance request is entirely within the BLM's discretion.

(6) A variance from the requirements of a regulation in this part does not constitute a variance from provisions of other regulations, including Onshore Oil and Gas Orders.

(b) The BLM reserves the right to rescind a variance or modify any COA of a variance due to changes in Federal law, technology, regulation, BLM policy, field operations, noncompliance, or other reasons. The BLM will provide a written justification if it rescinds a variance or modifies a COA.

(c) The procedures for requesting and granting a variance under this section must not be used as an avenue for approving new measurement technology, methods, or equipment. Approval of alternative oil and gas measurement equipment or methods must be obtained through the PMT, following the requirements under § 3170.30.

**§ 3170.50 Required recordkeeping, records retention, and records submission.**

(a) Lessees, operators, purchasers, transporters, and any other person

directly involved in producing, transporting, purchasing, selling, or measuring oil or gas through the point of royalty measurement or the point of first sale, whichever is later, must retain all records, including source records, that are relevant to determining the quality, quantity, disposition, and verification of production attributable to Federal or Indian leases for the periods prescribed in paragraphs (c) through (e) of this section.

(b) This retention requirement applies to records generated during or for the period for which the lessee or operator has an interest in or conducted operations on the lease, or in which a person is involved in transporting, purchasing, or selling production from the lease.

(c) For Federal leases, and units or CAs that include Federal leases, but do not include Indian leases, the record holder must maintain records for:

(1) Seven years after the records are generated; unless,

(2) A judicial proceeding or demand involving such records is timely commenced, in which case the record holder must maintain such records until the final nonappealable decision in such judicial proceeding is made, or with respect to that demand is rendered, unless the Secretary or their designee or the applicable delegated State authorizes in writing an earlier release of the requirement to maintain such records.

(d) For Indian leases, and units or CAs that include Indian leases, but do not include Federal leases, the record holder must maintain records for:

(1) Six years after the records are generated; unless,

(2) The Secretary or their designee notifies the record holder that the Department of the Interior has initiated or is participating in an audit or investigation involving such records, in which case the record holder must maintain such records until the Secretary or their designee releases the record holder from the obligation to maintain the records.

(e) For units and communitized areas that include both Federal and Indian leases, 6 years after the records are generated. If the Secretary or their designee has notified the record holder within those 6 years that an audit or investigation involving such records has been initiated, then:

(1) If a judicial proceeding or demand is commenced within 7 years after the records are generated, the record holder must retain all records regarding production from the lease, unit PA, or CA until the final nonappealable decision in such judicial proceeding is made, or with respect to that demand is rendered, unless the Secretary or their designee authorizes in writing a release of the requirement to maintain such records before a final nonappealable decision is made or rendered.

(2) If a judicial proceeding or demand is not commenced within 7 years after the records are generated, the record holder must retain all records regarding production from the unit or communitized area until the Secretary or their designee releases the record holder from the obligation to maintain the records;

(f) The lessee, operator, purchaser, or transporter must maintain an audit trail.

(g) All records, including source records, that are used to determine quality, quantity, disposition, and verification of production attributable to a Federal or Indian lease, unit PA, or CA, must include the FMP number or the lease, unit PA, or CA number, land description along with a unique equipment identifier (*e.g.,* a unique tank identification number and meter ID), and the name of the company that created the record. For all facilities existing prior to the assignment of an FMP number, all records must include the following information:

(1) The name of the operator;

(2) The lease, unit PA, or CA number;

(3) The well or facility name and number; and

(4) Land description.

(h) Upon request of the AO, the operator, purchaser, or transporter must provide such records to the AO as may be required by regulation, written order, Onshore Order, NTL, or COA.

(i) All records must be legible.

(j) All records requiring a signature must also have the signer's printed name.

### § 3170.60 Appeal procedures.

(a) BLM decisions, orders, assessments, or other actions under the regulations in this part are administratively appealable under the procedures prescribed in 43 CFR 3165.3(b), 3165.4, and part 4.

(b) For any recommendation made by the PMT, and approved by the BLM, a party affected by such recommendation may file a request for discretionary review by the Assistant Secretary for Land and Minerals Management. The Assistant Secretary may delegate this review function as they deem appropriate, in which case the affected party's application for discretionary review must be made to the person or persons to whom the Assistant Secretary's review function has been delegated.

### § 3170.70 Enforcement.

Noncompliance with any of the requirements of this part or any order issued under this part may result in enforcement actions under 43 CFR subpart 3163 or any other remedy available under applicable law or regulation.

■ 3. Revise subpart 3173 to read as follows:

## Subpart 3173—Requirements for Site Security and Production Handling

Sec.

3173.10 Definitions and acronyms.
3173.20 Storage and sales facilities—seals.
3173.21 Oil measurement system components—seals.
3173.22 Federal seals.
3173.30 Removing production from tanks for sale and transportation by truck.
3173.31 Water-draining operations.
3173.32 Hot oiling, clean-up, and completion operations.
3173.40 Report of theft or mishandling of production.
3173.41 Required recordkeeping for inventory and seal records.
3173.43 Data submission and notification requirements.
3173.50 Site facility diagram.
3173.60 Applying for a facility measurement point number.
3173.61 Requirements for approved facility measurement points.
3173.70 Conditions for commingling and allocation approval (surface and downhole).
3173.71 Applying for a commingling and allocation approval.
3173.72 Existing commingling and allocation approvals.
3173.73 Relationship of a commingling and allocation approval to royalty-free use of production.
3173.74 Modification of a commingling and allocation approval.
3173.75 Effective date of a commingling and allocation approval.
3173.76 Terminating a commingling and allocation approval.
3173.80 Combining production downhole in certain circumstances.
3173.90 Requirements for off-lease measurement.
3173.91 Applying for off-lease measurement.
3173.92 Effective date of an off-lease measurement approval.
3173.93 Existing approved off-lease measurement.
3173.94 Relationship of off-lease measurement approval to royalty-free use of production.
3173.95 Termination of off-lease measurement approval.
3173.96 Instances not constituting off-lease measurement, for which no approval is required.
3173.190 Immediate assessments for certain violations.
Appendix A to Subpart 3173—Examples of Site Facility Diagrams

## Subpart 3173—Requirements for Site Security and Production Handling

### § 3173.10 Definitions and acronyms.

(a) As used in this subpart, the term:

*Access* means the ability to:

(i) Add liquids to or remove liquids from any tank or piping system, through a valve or combination of valves or by moving liquids from one tank to another tank; or

(ii) Enter any component in a measuring system affecting the accuracy of the measurement of the quality or quantity of the liquid being measured.

*Appropriate valves* means those valves that provide access to production before it is measured for sales and that are subject to the sealing requirements of this subpart.

*Authorized representative (AR)* has the same meaning as defined in 43 CFR 3160.0–5.

*Business day* means any day Monday through Friday, excluding Federal holidays.

*Commingling and allocation approval (CAA)* means a formal allocation agreement to combine production from two or more sources (leases, unit PAs, CAs, or non-Federal or non-Indian properties) before that product reaches an FMP.

*Completed* means when oil or gas is first produced through wellhead equipment from the ultimate producing interval after casing has been run.

*Economically marginal property* means a lease, unit PA, or CA—

(i) For which:

(A) The expected revenue (minus any associated operating costs) generated from crude-oil or natural-gas production volumes on that property is not sufficient to cover the cost of the capital expenditures based on the least expensive practicable alternative average cost to construct facilities typical for the area required to achieve measurement of non-commingled production of oil or gas from that property over a payout period of 18 months; or

(B) The royalty net present value (RNPV) is less than the cost of the capital expenditures for the least expensive, practicable alternative required to achieve measurement of non-commingled production of oil or gas from that property.

(ii) Both the payout period and the RNPV are determined separately for each lease, unit PA, or CA oil or gas FMP. Oil FMPs are evaluated using estimated revenue (minus taxes and operating costs) from crude oil production, as defined in this section, while gas FMPs are evaluated using estimated revenue (minus taxes and operating costs) from natural gas production, as defined in this section.

*Effectively sealed* means the placement of a seal in such a manner that the sealed component cannot be accessed, moved, or altered without breaking the seal.

*Free water* means the measured volume of water that is present in a container and that is not in suspension in the contained liquid at observed temperature.

*Maximum ultimate economic recovery* has the same meaning as defined in 43 CFR 3160.0–5.

*Mishandling* means failing to measure or account for removal of production from a facility.

*Payout period* means the time required, in months, for the cost of an investment in an oil or gas FMP for a specific lease, unit PA, or CA to be covered by the nominal revenue earned from crude oil production, for an oil FMP, or natural gas production, for a gas FMP, minus taxes, royalties, and any operating and variable costs. The payout period is determined separately for each oil or gas FMP for a given lease, unit PA, or CA.

*Piping* means a tubular system (*e.g.,* metallic, plastic, fiberglass, or rubber) used to move fluids (liquids and gases).

*Production phase* means that event during which oil is delivered directly to or through production equipment to the storage facilities and includes all operations at the facility other than those defined by the sales phase.

*Propagation of uncertainty,* in statistics, means the effect of variables' uncertainties on the uncertainty of a function based on those variables.

*Royalty Net Present Value (RNPV)* means the net present value of all Federal or Indian royalties paid on revenue earned from crude oil production or natural gas production from an oil or gas FMP for a given lease, unit PA, or CA over the expected life of metering equipment that must be installed for that lease, unit PA, or CA to achieve non-commingled measurement.

*Sales phase* means that event during which oil is removed from storage facilities for sale at an FMP.

*Seal* means a uniquely numbered device that completely secures either a valve or those components of a measuring system that affect the quality or quantity of the oil being measured.

(b) As used in this subpart, the following additional acronyms apply:

*BIA* means the Bureau of Indian Affairs.

*BMP* means Best Management Practice.

### § 3173.20 Storage and sales facilities—seals.

(a) All lines entering or leaving any oil storage tank must have valves capable of being effectively sealed during the production and sales phases unless otherwise provided under this subpart. Appropriate valves must be in an operable condition and accurately reflect whether the valve is open or closed. During the production phase, all appropriate valves that allow unmeasured production to be removed from storage must be effectively sealed in the closed position. During any other phase (sales, water drain, or hot oiling), and prior to taking the top tank gauge measurement, all appropriate valves that allow unmeasured production to enter or leave the sales tank must be effectively sealed in the closed position (see appendix A to subpart 3173). Each unsealed or ineffectively sealed appropriate valve is a separate violation.

(b) Valves or combinations of valves and tanks that provide access to the production before it is measured for sales are considered appropriate valves and are subject to the seal requirements of this subpart (see Appendix A to subpart 3173). If there is more than one valve on a line from a tank, the valve closest to the tank must be sealed. All appropriate valves must be in an operable condition and accurately reflect whether the valve is open or closed.

(c) The following are not considered appropriate valves and are not subject to the sealing requirements of this subpart:

(1) Valves on production equipment (*e.g.,* separator, dehydrator, gun barrel, or wash tank);

(2) Valves on water tanks, provided that the possibility of access to production in the sales and storage tanks does not exist through a common circulating, drain, overflow, or equalizer system;

(3) Valves on tanks that contain oil that has been determined by the AO or AR to be waste or slop oil;

(4) Sample cock valves used on piping or tanks with a Nominal Pipe Size of 1 inch or less in diameter;

(5) Fill-line valves during shipment when a single tank with a nominal capacity of 500 barrels (bbl) or less is used for collecting marginal production of oil produced from a single well (*i.e.,* production that is less than 3 bbl per day). All other seal requirements of this subpart apply;

(6) Gas line valves used on piping with a Nominal Pipe Size of 1 inch or less used as tank bottom ''roll'' lines, provided there is no access to the contents of the storage tank and the roll lines cannot be used as equalizer lines;

(7) Valves on tank heating systems that use a fluid other than the contents of the storage tank (*i.e.,* steam, water, or glycol);

(8) Valves used on piping with a Nominal Pipe Size of 1 inch or less connected directly to the pump body or used on pump bleed off lines;

(9) Tank vent-line valves; and

(10) Sales, equalizer, or fill-line valves on systems where production may be removed only through approved oil metering systems (*e.g.,* LACT or CMS). However, any valve that allows access for removing oil before it is measured through the metering system must be effectively sealed (see appendix A to subpart 3173).

(d) Tampering with any appropriate valve is prohibited. Tampering with an appropriate valve may result in an assessment of civil penalties under 30 U.S.C. 1719 and 43 CFR 3163.2 for knowingly or willfully preparing, maintaining, or submitting false, inaccurate, or misleading reports, records, or written information, or knowingly or willfully taking, removing, transporting, using, or diverting oil or gas from a lease site without valid legal authority, together with any other remedies provided by law.

**§ 3173.21 Oil measurement system components—seals.**

(a) Components used for quantity or quality determination of oil must be effectively sealed to indicate tampering. Such components include, but are not limited to, the following components of LACT meters (see §§ 3174.101 through 3174.108) and CMSs (see § 3174.130):

(1) Sampler volume control;

(2) All valves on lines entering or leaving the sample container, excluding the safety pop-off valve (if so equipped). Each valve must be sealed in the open or closed position, as appropriate;

(3) Mechanical counter head (totalizer) and meter head;

(4) Stand-alone temperature averager monitor;

(5) Non-automatic adjusting, fixed, back pressure valve pressure adjustment downstream of the meter;

(6) Any drain valves larger than 1 inch in nominal diameter in the system; and

(7) Right-angle drive.

(b) Each missing or ineffectively sealed component is a separate violation.

**§ 3173.22 Federal seals.**

(a) In addition to any INC issued for a seal violation, the AO or AR may place one or more Federal seals on any appropriate valve, sealing device, or oil-metering-system component that does not comply with the requirements in §§ 3173.2 and 3173.3 if the operator is not present, refuses to cooperate with the AO or AR, or is unable to correct the noncompliance.

(b) The placement of a Federal seal does not constitute compliance with the requirements of §§ 3173.20 and 3173.21.

(c) A Federal seal may not be removed without the approval of the AO or AR.

**§ 3173.30 Removing production from tanks for sale and transportation by truck.**

(a) When a single truckload constitutes a completed sale, the driver must possess documentation containing the information required in § 3174.161(a) or § 3174.162.

(b) When multiple truckloads are involved in a sale and the oil measurement method is based on the difference between the opening and closing gauges, the driver of the last truck must possess the documentation containing the information required in § 3174.161(a) or § 3174.162. All other drivers involved in the sale must possess a trip log or manifest.

(c) After the seals have been broken, the purchaser or transporter is responsible for the entire contents of the tank until it is resealed.

**§ 3173.31 Water-draining operations.**

When water is drained from a production storage tank, the operator, purchaser, or transporter, as appropriate, must document the information as required in § 3173.41(b).

**§ 3173.32 Hot oiling, clean-up, and completion operations.**

(a) During hot oil, clean-up, or completion operations, or any other situation where the operator removes oil from storage, temporarily uses it for operational purposes, and then returns it to storage on the same lease, unit PA, or communitized area, the operator must document the following information:

(1) Federal or Indian lease, unit PA, or CA number(s);

(2) Tank location by land description;

(3) Unique tank number and nominal capacity;

(4) Date of the opening gauge;

(5) Opening gauge measurement (gauged manually or automatically) to the nearest ½ inch;

(6) Unique identifying number of each seal removed;

(7) Closing gauge measurement (gauged manually or automatically) to the nearest ½ inch;

(8) Unique identifying number of each seal installed;

(9) How the oil was used; and

(10) Where the oil was used (*i.e.,* well or facility name and number).

(b) During hot oiling, line flushing, or completion operations or any other situation where the operator removes production from storage for use on a different lease, unit PA, or communtized area, the production is considered sold and must be measured in accordance with the applicable requirements of this subpart and reported as sold to ONRR on the OGOR under 30 CFR part 1210 subpart C for the period covering the production in question.

**§ 3173.40 Report of theft or mishandling of production.**

(a) No later than the next business day after discovery of an incident of apparent theft or mishandling of production, the operator, purchaser, or transporter must report the incident to the AO. All oral reports must be followed up with a written incident report within 10 business days of the oral report.

(b) The incident report must include the following information:

(1) Company name and name of the person reporting the incident;

(2) Lease, unit PA, or CA number, well or facility name and number, and FMP number, as appropriate;

(3) Land description of the facility location where the incident occurred;

(4) The estimated volume of production removed;

(5) The manner in which access was obtained to the production or how the mishandling occurred;

(6) The name of the person who discovered the incident;

(7) The date and time of the discovery of the incident; and

(8) Whether the incident was reported to local law enforcement agencies and/or company security.

**§ 3173.41 Required recordkeeping for inventory and seal records.**

(a) The operator must perform an end-of-month inventory (gauged manually or automatically) that records: TOV in storage (measured to the nearest ½ inch) subtracting free water, the volume not corrected for temperature/S&W, and the volume as reported to ONRR on the OGOR;

(1) The end-of-month inventory must be completed within ± 3 days of the last day of the calendar month; or

(2) The end of month inventory must be a calculated ''end of month'' inventory based on daily production that takes place between two measured inventories that are not more than 31, nor fewer than 20, days apart. The calculated monthly inventory is determined based on the following equation:

$$\{[(X + Y - W) / Z1] * Z2\} + X = A,$$

where:

A = calculated end of month inventory;
W = first inventory measurement;
X = second inventory measurement;
Y = gross sales volume between the first and second inventory;
Z1 = number of actual days produced between the first and second inventory; and
Z2 = number of actual days produced between the second inventory and end of calendar month for which the OGOR report is due.

For example: If the first inventory measurement performed on January 12 is 125 bbl, the second inventory measurement performed on February 10 is 150 bbl, the gross sales volume between the first and second inventory is 198 bbl, and February is the calendar month for which the report is due. For purposes of this example, we assume February had 28 days and that the well was non-producing for two of those days.

{[(150 bbl + 198 bbl − 125 bbl)/29 days] * 16 days} + 150 bbl = 273 bbl for the February end-of-month inventory.

(b) For each seal, the operator must maintain a record that includes:

(1) The unique identifying number of each seal and the valve or meter component on which the seal is or was used;

(2) The date of installation or removal of each seal;

(3) For valves, the position (open or closed) in which it was sealed; and

(4) The reason the seal was removed.

**§ 3173.43 Data submission and notification requirements.**

(a) The operator must submit a Form 3160–5, Sundry Notices and Reports on Wells (Sundry Notice) for the following:

(1) Site facility diagrams (see § 3173.50);

(2) Request for an FMP number (see § 3173.60);

(3) Request for FMP amendments (see § 3173.61(b));

(4) Requests for approval of off-lease measurement (see § 3173.91);

(5) Request to amend an approval of off-lease measurement (see § 3173.91(k));

(6) Requests for approval of CAAs (see § 3173.71); and

(7) Request to modify a CAA (see § 3173.74).

(b) The operator must submit all Sundry Notices electronically to the BLM office having jurisdiction over the lease, unit, or CA using WIS, unless the submitter:

(1) Is a small business, as defined by the U.S. Small Business Administration; and

(2) Does not have access to the internet.

**§ 3173.50 Site facility diagram.**

(a) A site facility diagram is required for all facilities.

(b) Except for the requirement to submit a Form 3160–5, Sundry Notice, with the site facility diagram, no format is prescribed for site facility diagrams. The diagram should be formatted to fit on an 8½″ by 11″ sheet of paper, if possible, and must be legible and comprehensible to an individual with an ordinary working knowledge of oil field operations (see appendix A to subpart 3173). If more than one page is required, each page must be numbered (in the format ''N of X pages'').

(c) The diagram must:

(1) Reflect the position of the production and water recovery equipment, piping for oil, gas, and water, and metering or other measuring systems in relation to each other, but need not be to scale;

(2) Commencing with the header, identify all of the equipment, including, but not limited to, the header, wellhead, piping, tanks, and metering systems located on the site, and include the appropriate valves and any other equipment used in the handling, conditioning, or disposal of production and water, and indicate the direction of flow;

(3) Identify by the complete US well number the wells flowing into headers;

(4) If another operator operates a co-located facility, the operator must identify the co-operator by name on the diagram and identify with a box on the diagram the approximate location of the co-located facility;

(5) Indicate which valve(s) must be sealed and in what position during the production and sales phases and during other production activities (*e.g.,* circulating tanks or drawing off water), which may be shown by an attachment, if necessary;

(6) For storage facilities common to co-located facilities operated by one operator, one diagram is sufficient;

(7) Clearly identify the lease, unit PA, or CA to which the diagram applies, the land description of the facility, and the name of the company submitting the diagram, and any co-located facilities;

(8) Clearly identify, on the diagram or as an attachment, all meters and measurement equipment. Specifically identify all assigned FMP numbers or the unique identifiers or station ID numbers of the measurement equipment used for royalty reporting; and

(9) If the operator claims royalty-free use, clearly identify the equipment for which the operator claims royalty-free use. The operator must either:

(i) For each engine, motor, or major component (*e.g.,* compressor, separator, dehydrator, heater-treater, or tank heater) powered by production from the lease, unit PA, or CA, state the volume (oil or gas) consumed (per day or per month) and how the volume is determined; or

(ii) Measure the volume used, by meter or tank gauge.

(d) The operator must submit a new site facility diagram as follows:

(1) For new, permanent facilities that become operational after [EFFECTIVE DATE OF FINAL RULE], a site facility diagram within 60 days after the facility becomes operational; or

(2) For a facility that is in service on or before [EFFECTIVE DATE OF FINAL RULE], and that has a site facility diagram on file with the BLM that meets the minimum requirements of Onshore Oil and Gas Order 3, Site Security, an amended site facility diagram meeting the requirements of this section is not due until 60 days after the existing facility is modified, or a non-Federal facility located on a Federal lease or federally approved unit or communitized area is constructed or modified.

(e) After a site facility diagram has been submitted that complies with the requirements of this part, the current operator has an ongoing obligation to update and amend the diagram within 60 days after such facility is modified or, a non-Federal facility located on a Federal lease or federally approved unit or communitized area is constructed or modified.

**§ 3173.60 Applying for a facility measurement point number.**

(a) The operator must submit separate applications for approval of an FMP number that measures oil produced from a lease, unit PA, or CA, gas storage agreement involving native gas or oil, or under a CAA that complies with the requirements of this subpart, and an FMP number that measures gas produced from the same lease, unit PA, or CA, or under a CAA that complies with the requirements of this subpart. This requirement applies even if the measurement equipment or facilities are at the same location.

(b) For a permanent measurement facility that comes into service after [EFFECTIVE DATE OF FINAL RULE], the operator must apply for approval of the FMP number before any production leaves the permanent measurement facility. This requirement does not apply to measurement equipment at any temporary measurement facility used

during well-testing operations. After timely submission and prior to approval of an FMP number request, an operator must use the lease, unit PA, or CA number for reporting production to ONRR, until the BLM assigns an FMP number, at which point the operator must use the FMP number for all reporting to ONRR as set forth in § 3173.61.

(c) For a permanent measurement facility in service on or before [EFFECTIVE DATE OF FINAL RULE], the operator must apply for BLM approval of an FMP number within the time prescribed in this paragraph, based on the production level of any one of the leases, unit PAs, or CAs, whether or not they are part of a CAA. The deadline to apply for an FMP number approval applies to both oil and gas measurement facilities measuring production from that lease, unit PA, or CA.

(1) For a stand-alone lease, unit PA, or CA that produced 4,500 Mcf or more of gas per month or 500 bbl or more of oil per month, the deadline is [DATE ONE YEAR AFTER EFFECTIVE DATE OF FINAL RULE].

(2) For a stand-alone lease, unit PA, or CA that produced 1,000 Mcf or more, but less than 4,500 Mcf of gas per month, or 50 bbl or more, but less than 500 bbl of oil per month, the deadline is [DATE TWO YEARS AFTER EFFECTIVE DATE OF FINAL RULE].

(3) For a stand-alone lease, unit PA, or CA that produced less than 1,000 Mcf of gas per month or less than 50 bbl of oil per month, the deadline is [DATE THREE YEARS AFTER THE EFFECTIVE DATE OF THE FINAL RULE].

(4) For a stand-alone lease, unit PA, or CA that has not produced for a year or more before [EFFECTIVE DATE OF FINAL RULE], the operator must apply for an FMP number prior to the resumption of production.

(5) The production levels identified in paragraphs (d)(1) through (3) of this section should be calculated using the average production of oil or gas over the 12 months preceding the effective date of this section or over the period the lease, unit PA, or CA has been in production, whichever is shorter.

(6) If the operator of any facility covered by this section applies for an FMP number approval by the deadline in this paragraph, the operator may continue using the lease, unit PA, or CA number for reporting production to ONRR, until the BLM assigns an FMP number, at which point the operator must use the FMP number for all reporting to ONRR as set forth in § 3173.61.

(d) All requests for FMP number approval must include the following:

(1) A complete Sundry Notice requesting approval of each FMP; and

(2) Information about the equipment used for oil and gas measurement, including, for:

(i) ''Gas measurement,'' specify the name of the operator/purchaser/transporter, as appropriate, the unique meter identification, and elevation;

(ii) ''Oil measurement by tank gauge,'' specify name of the operator/purchaser/transporter, as appropriate, and the oil tank number or tank serial number and size in barrels or gallons for all tanks associated with measurement at an FMP; and

(iii) ''Oil measurement by LACT or CMS,'' specify the name of operator/purchaser/transporter, as appropriate, and unique meter identification;

(3) Where production from more than one well will flow to the requested FMP, list the US well numbers associated with the FMP; and

(4) FMP location by land description.

(f) A request for approval of an FMP number may be submitted simultaneously with separate requests for off-lease measurement and/or CAA.

**§ 3173.61 Requirements for approved facility measurement points.**

(a) An operator must start reporting production to ONRR on its OGOR using an FMP number for the third production month after the BLM assigns the FMP number(s), and every month thereafter. (For example, for a facility that is assigned an FMP number on January 15, 2021, the effective date of the FMP is the April 2021 production report.)

(b)(1) The operator must file a Sundry Notice that describes any changes or modifications made to the FMP within 30 days after the change. This requirement does not apply to temporary modifications (*e.g.,* for maintenance purposes). These include any changes and modifications to the information listed on an application submitted under § 3173.60.

(2) The Sundry Notice must specify what was changed and the effective date, and include, if appropriate, an amended site facility diagram (see § 3173.50).

**§ 3173.70 Conditions for commingling and allocation approval (surface and downhole).**

(a) Subject to the exceptions provided in paragraph (b) of this section, the BLM may grant a CAA only if the proposed allocation method used for commingled measurement does not have the potential to affect the determination of the total quantity or quality of production on which royalty is owed. All the Federal or Indian leases, unit Pas, or CAs proposed for commingling must meet the following conditions:

(1) The proposed commingling includes production from more than one:

(i) Federal lease, unit PA, or CA, where each lease, unit PA, or CA proposed for commingling has 100 percent Federal mineral interest, and the same fixed royalty rate;

(ii) Indian tribal lease, unit PA, or CA, where each lease, unit PA, or CA proposed for commingling is wholly owned by the same tribe and has the same fixed royalty rate;

(iii) Federal unit PA or CA, where each unit PA, or CA proposed for commingling has the same proportion of Federal interest, and each interest is subject to the same fixed royalty rate. (For example, the BLM could approve a commingling request under this paragraph where an operator proposes to commingle two Federal CAs of mixed ownership and both CAs are 50 percent Federal and 50 percent private, so long as the Federal interests have the same royalty rates.); or

(iv) Indian unit PA or CA, where each unit PA or CA proposed for commingling has the same proportion of Indian interests, and each interest is held by the same tribe and has the same fixed royalty rate;

(2) The operator or operators provide a methodology acceptable to the BLM for allocation among the leases or agreements from which production is to be commingled, with a signed agreement if there is more than one operator.

(3) The applicant demonstrates to the AO that each lease, unit PA, or CA proposed for inclusion in the CAA is producing in paying quantities (or, in the case of Federal leases, capable of production in paying quantities) pending approval of the CAA, or the applicant demonstrates to the AO that a lease, unit PA, or CA proposed for inclusion in the CAA has an approved Application for Permit to Drill.

(b) The BLM may also approve a CAA in instances where the proposed commingling of production involves production from Federal or Indian leases, unit PAs, or CAs that do not meet the criteria of paragraph (a)(1) of this section (*e.g.,* the commingling of leases, unit PAs, or CAs with different royalty rates, or where the commingling involves multiple mineral ownerships). In order to be approved, a CAA under this paragraph must meet the requirements of paragraphs (a)(2) through (3) of this section and at least one of the following conditions must be met:

(1) The Federal or Indian lease, unit PA, or CA meets the definition of an economically marginal property.

However, if the BLM determines that the economically marginal Federal or Indian lease, unit PA, or CA included in a CAA ceases to be an economically marginal property, then this condition is no longer met;

(2) The average monthly production over the preceding 12 months for each Federal or Indian lease, unit PA, or CA proposed for the CAA on an individual basis is less than 6,000 Mcf of gas per month, or 1,000 bbl of oil per month;

(3) A CAA that includes Indian leases, unit PAs, or CAs has been authorized under tribal law or otherwise approved by a tribe;

(4) The CAA covers the downhole commingling of production from multiple formations that are covered by separate leases, unit PAs, or CAs, where the BLM has determined that the proposed commingling from those formations is an acceptable practice for the purpose of achieving maximum ultimate economic recovery and resource conservation;

(5) The applicant must provide an overall allocation uncertainty analysis calculated by using propagation of uncertainty method of the Federal or Indian mineral interest percentage for each lease, unit PA, or CA proposed for commingling which meets the following criteria:

(i) Overall allocation uncertainty analysis must meet the performance goals in § 3174.31 or § 3175.31;

(ii) The analysis must show no allocation bias as a result of commingling allocation;

(iii) The analysis must state what the assumed underlying distribution is of the volumes generated in the analysis and support the use of the underlying distribution assumption; and

(iv) The analysis must be limited to four leases, unit PAs, or CAs proposed for commingling approval.

(6) There are overriding considerations that indicate the BLM should approve a commingling application in the public interest, notwithstanding potential negative royalty impacts from the allocation method. Such considerations could include topographic or environmental considerations that make non-commingled measurement physically impractical or undesirable, in view of where additional measurement and related equipment necessary to achieve non-commingled measurement would have to be located.

**§ 3173.71 Applying for a commingling and allocation approval.**

To apply for a CAA, the applicant must submit the following, if applicable, to the BLM office having jurisdiction over the leases, unit PAs, or CAs from which production is proposed to be commingled:

(a) A completed Sundry Notice requesting approval of commingling and allocation of either oil or gas;

(b) A completed Sundry Notice for approval of off-lease measurement under § 3173.91, if any of the proposed FMPs are outside the boundaries of any of the leases, units, or CAs from which production would be commingled. The Sundry Notice for off-lease measurement approval must be submitted simultaneously with the Sundry Notice requesting commingling approval;

(c) A proposed allocation agreement, including a proposed allocation methodology, with an example of how the methodology would be applied, signed by each operator of each of the leases, unit PAs, or CAs from which production would be included in the CAA;

(d) A list of all Federal or Indian lease, unit PA, or CA numbers in the proposed CAA, specifying the type of production (*i.e.,* oil or gas) for which commingling is requested;

(e) A map or maps (topographic map, if applying under § 3173.70(b)(6)) of appropriate scale showing the following:

(1) The boundaries of all the leases, units, unit PAs, or communitized areas whose production is proposed to be commingled; and

(2) The location of existing or planned facilities and the relative location of all wellheads (including the US well number) and piping included in the CAA, and existing FMPs or FMPs proposed to be installed to the extent known or anticipated;

(f) An applicant-certified statement of a surface-use plan of operations, if new surface disturbance is proposed for the FMP and its associated facilities are located on BLM-managed land within the boundaries of the leases, units, and communitized areas from which production would be commingled;

(g) An applicant-certified statement of a right-of-way grant approval under 43 CFR part 2880, if the proposed FMP is on a pipeline, or approved under 43 CFR part 2800, if the proposed FMP is a meter or storage tank. This requirement applies only when new surface disturbance is proposed for the FMP, and its associated facilities are located on BLM-managed land outside any of the leases, units, or communitized areas where production would be commingled;

(h) Written approval from the appropriate surface-management agency, if new surface disturbance is proposed for the FMP and its associated facilities are located on Federal land managed by an agency other than the BLM;

(i) An applicant-certified statement of a right-of-way grant approval for the proposed FMP, filed under 25 CFR part 169, with the appropriate BIA office, if any of the proposed surface facilities are on Indian land outside the lease, unit, or communitized area from which the production would be commingled;

(j) Documentation demonstrating that each of the leases, unit PAs, or CAs proposed for inclusion in the CAA is producing in paying quantities (or, in the case of Federal leases, is capable of production in paying quantities) pending approval of the CAA. If the leases are not yet producing, documentation that a lease, unit PA, or CA proposed for inclusion has an approved Application for Permit to Drill, including offset well decline curve data to support projected production volumes presented in the commingling application;

(k) All gas analyses, including Btu content or oil gravities as applicable, for previous periods of production from the leases, units, unit PAs, or communitized areas proposed for inclusion in the CAA, for up to 6 years before the date of the application for approval of the CAA. Gas analysis and oil gravity data is not needed if the CAA falls under paragraph (a)(1) of this section.

**§ 3173.72 Existing commingling and allocation approvals.**

Upon receipt of an operator's request for assignment of an FMP number to a facility associated with a CAA existing on [EFFECTIVE DATE OF FINAL RULE], the AO will review the existing CAA and take the following action:

(a) The AO will grandfather the existing CAA and associated off-lease measurement, where applicable, if the existing CAA meets one of the following conditions:

(1) The existing CAA involves downhole commingling that includes Federal or Indian leases, unit PAs, or CAs; or

(2) The existing CAA is for surface commingling and the average production rate over the previous 12 months for each Federal or Indian lease, unit PA, and CA included in the CAA is:

(i) Less than 6,000 Mcf per month for gas; or

(ii) Less than 1,000 bbl per month for oil.

(b) If the existing CAA does not meet the conditions of paragraph (a)(1) or (2) of this section, the AO will review the CAA for consistency with the minimum

standards and requirements for a CAA under § 3173.14.

(1) The AO will notify the operator in writing of any inconsistencies or deficiencies with an existing CAA. The operator must correct any inconsistencies or deficiencies that the AO identifies, provide the additional information that the AO has requested, or request an extension of time from the AO, within 20 business days after receipt of the AO's notice. When the AO is satisfied that the operator has corrected any inconsistencies or deficiencies, the AO will terminate the existing CAA and grant a new CAA based on the operator's corrections.

(2) The AO may terminate the existing CAA and grant a new CAA with new or amended COAs to make the approval consistent with the requirements under § 3173.70 in connection with approving the requested FMP. If the operator appeals any COAs of the new CAA, the existing CAA approval will continue in effect during the pendency of the appeal.

(3) If the existing CAA does not meet the standards and requirements of § 3173.70 and the operator does not correct the deficiencies, the AO may terminate the existing CAA under § 3173.76 and deny the request for an FMP number for the facility associated with the existing CAA.

(c) If the AO grants a new CAA to replace an existing CAA under paragraph (b) of this section, the new CAA is effective on the first day of the month following its approval. Any new allocation percentages resulting from the new CAA will apply from the effective date of the CAA forward.

(d) The grandfathering of an existing downhole commingling approval does not constitute a new surface commingling approval or the grandfathering of an associated surface commingling approval.

**§ 3173.73 Relationship of a commingling and allocation approval to royalty-free use of production.**

A CAA does not constitute approval of off-lease royalty-free use of production as fuel in facilities located at an FMP approved under the CAA.

**§ 3173.74 Modification of a commingling and allocation approval.**

(a) A CAA must be modified when:

(1) There is a modification to the allocation agreement;

(2) Additional leases, unit PAs, or CAs are proposed for inclusion in the CAA; or

(3) There is permanent production cessation from any of the leases, unit PAs, or CAs within the CAA.

(b) When a CAA was based on projected production quantity and quality and any of the leases, unit PAs, or CAs exceeds the production projections provided by the applicant, then the CAA must be reevaluated and the approval may be rescinded, revised, or COAs modified.

(c) To request a modification of a CAA, all operators must submit to the AO:

(1) A completed Sundry Notice describing the modification requested;

(2) A new allocation methodology, including an allocation methodology and an example of how the methodology is applied, if appropriate; and

(3) Certification by each operator in the CAA that it agrees to the CAA modification.

(d) A change in operator does not trigger the need to modify a CAA.

**§ 3173.75 Effective date of a commingling and allocation approval.**

(a) If the BLM approves a CAA, the effective date of the CAA is the first day of the month following first production through the FMPs for the CAA.

(b) If the BLM approves a modification, the effective date is the first day of the month following approval of the modification.

(c) A CAA does not modify any of the terms of the leases, units, or CAs covered by the CAA.

**§ 3173.76 Terminating a commingling and allocation approval.**

(a) The AO may terminate a CAA for any reason, including, but not limited to, the following:

(1) Changes in technology, regulation, or BLM policy;

(2) Operator non-compliance with the terms or COAs of the CAA or this subpart; or

(3) The AO determines that a lease, unit, or CA subject to the CAA has terminated, or a unit PA subject to the CAA has ceased production; or

(4) A CAA was based on projected production quantity and quality and any of the leases, unit PAs, or CAs exceeds the production projections provided by the applicant.

(b) If only one lease, unit PA, or CA remains subject to the CAA, the CAA terminates automatically.

(c) An operator may terminate its participation in a CAA by submitting a Sundry Notice to the BLM. The Sundry Notice must identify the FMP(s) for the lease(s), unit PA(s), or CA(s) previously subject to the CAA. Termination by one operator does not mean the CAA terminates as to all other participating operators, so long as one of the other provisions of this subpart is met and the remaining operators submit a Sundry Notice requesting a new CAA as outlined in paragraph (e) of this section.

(d) The AO will notify in writing all operators who are a party to the CAA of the effective date of the termination and any inconsistencies or deficiencies with their CAA approval that serve as the reason(s) for termination. The operator must correct any inconsistencies or deficiencies that the AO identifies, provide the additional information that the AO has requested, or request an extension of time from the AO, within 20 business days after receipt of the BLM's notice, or the CAA is terminated.

(e) If a CAA is terminated, each lease, unit PA, or CA that was included in the CAA may require a new FMP number(s) or a new CAA. Operators will have 30 days to apply for a new FMP number (§ 3173.12) or CAA (§ 3173.15), if applicable. The existing FMP number may be used for production reporting until a new FMP number is assigned or CAA is approved.

**§ 3173.80 Combining production downhole in certain circumstances.**

(a)(1) Combining production from a single well completed in different hydrocarbon pools or geologic formations (*e.g.,* a directional well) underlying separate adjacent properties (whether Federal, Indian, State, or private), where none of the hydrocarbon pools or geologic formations underlie or are common to more than one of the respective properties, constitutes commingling for purposes of §§ 3173.70 through 3173.76.

(2) If any of the hydrocarbon pools or geologic formations underlie or are common to more than one of the properties, the operator must establish a unit PA (see 43 CFR part 3180) or CA (see 43 CFR 3105.2–1—3105.2–3), as applicable, rather than applying for a CAA.

(b) Combining production downhole from different geologic formations on the same lease, unit PA, or CA in a single well requires approval of the AO (see 43 CFR 3162.3–2), but it is not considered commingling for production accounting purposes.

**§ 3173.90 Requirements for off-lease measurement.**

The BLM will consider granting a request for off-lease measurement if the request:

(a) Involves only production from a single lease, unit PA, CA, or CAA;

(b) Provides for accurate production accountability;

(c) Is in the public interest (considering factors such as BMPs,

topographic and environmental conditions that make on-lease measurement physically impractical, and maximum ultimate economic recovery); and

(d) Occurs at an approved FMP. A request for approval of an FMP (see § 3173.12) may be filed concurrently with the request for off-lease measurement.

**§ 3173.91 Applying for off-lease measurement.**

To apply for approval of off-lease measurement, the operator must submit the following to the BLM office having jurisdiction over the leases, units, or communitized areas:

(a) A completed Sundry Notice, with separate applications for each oil and gas FMP;

(b) Justification for off-lease measurement (considering factors such as BMPs, topographic and environmental issues, and maximum ultimate economic recovery);

(c) A topographic map or maps of appropriate scale showing the following:

(1) The boundary of the lease, unit, unit PA, or communitized area from which the production originates; and

(2) The location of existing or planned facilities and the relative location of all wellheads (including the US well number for each well) and piping included in the off-lease measurement proposal, and existing FMPs or FMPs proposed to be installed to the extent known or anticipated;

(d) The surface ownership of all land on which equipment is, or is proposed to be, located;

(e) If any of the proposed off-lease measurement facilities are located on non-federally owned surface, a written concurrence must be signed by the owner(s) of the surface and the owner(s) of the measurement facilities, including each owner's name, address, and telephone number, granting the BLM unrestricted access to the off-lease measurement facility and the surface on which it is located, for the purpose of inspecting any production, measurement, water handling, or transportation equipment located on the non-Federal surface up to and including the FMP, and for otherwise verifying production accountability. If the ownership of the non-Federal surface or of the measurement facility changes, the operator must obtain and provide to the AO the written concurrence required under this paragraph from the new owner(s) within 30 days of the change in ownership;

(f) An applicant certified statement of a right-of-way grant (Standard Form 299) approved under 43 CFR part 2880, if the proposed off-lease FMP is on a pipeline, or under 43 CFR part 2800, if the proposed off-lease FMP is a meter or storage tank. This requirement applies only when new surface disturbance is proposed for the FMP and its associated facilities are located on BLM-managed land;

(g) An applicant certified statement of a right-of-way grant approval under 25 CFR part 169 with the appropriate BIA office, if any of the proposed surface facilities are on Indian land outside the lease, unit, or communitized area from which the production originated;

(h) Written approval from the appropriate surface-management agency, if new surface disturbance is proposed for the FMP and its associated facilities are located on Federal land managed by an agency other than the BLM;

(i) An application for approval of off-lease royalty-free use (if required under applicable rules), if the operator proposes to use production from the lease, unit, or CA as fuel at the off-lease measurement facility without payment of royalty; and

(j) If the operator is applying for an amendment of an existing approval of off-lease measurement, the operator must submit a completed Sundry Notice required under paragraph (a) of this section, and information required under paragraphs (b) through (j) of this section to the extent the information previously submitted has changed.

**§ 3173.92 Effective date of an off-lease measurement approval.**

If the BLM approves off-lease measurement, the approval is effective on the date that the approval is issued, unless the approval specifies a different effective date.

**§ 3173.93 Existing approved off-lease measurement.**

(a) Upon receipt of an operator's request for assignment of an FMP number to a facility associated with an off-lease measurement approval existing on [EFFECTIVE DATE OF FINAL RULE], the AO will review the existing approved off-lease measurement for consistency with the minimum standards and requirements for an off-lease measurement approval under § 3173.22. The AO will notify the operator in writing of any inconsistencies or deficiencies.

(b) The operator must correct any inconsistencies or deficiencies that the AO identifies, provide any additional information the AO requests, or request an extension of time from the AO, within 20 business days after receipt of the AO's notice. The extension request must explain the factors that will prevent the operator from complying within 20 days and provide a timeframe under which the operator can comply.

(c) In connection with approving an FMP application, the AO may terminate the existing off-lease measurement approval and grant a new off-lease measurement approval with new or amended COAs to make the approval consistent with the requirements for off-lease measurement under § 3173.90 in connection with approving the requested FMP. If the operator appeals the new off-lease measurement approval, the existing off-lease measurement approval will continue in effect during the pendency of the appeal.

(d) If the existing off-lease measurement approval does not meet the standards and requirements of § 3173.90 and the operator does not correct the deficiencies, the AO may terminate the existing off-lease measurement approval under § 3173.95 and deny the request for an FMP number for the facility associated with the existing off-lease measurement approval.

(e) If the existing off-lease measurement approval under this section is consistent with the requirements under § 3173.90, then that existing off-lease measurement is grandfathered and will be part of the FMP approval.

(f) If the BLM grants a new off-lease measurement approval to replace an existing off-lease measurement approval, the new approval is effective on the first day of the month following its approval.

**§ 3173.94 Relationship of off-lease measurement approval to royalty-free use of production.**

Approval of off-lease measurement does not constitute approval of off-lease royalty-free use of production as fuel in facilities located at an FMP approved under the off-lease measurement approval.

**§ 3173.95 Termination of off-lease measurement approval.**

(a) The BLM may terminate off-lease measurement approval for any reason, including, but not limited to, the following:

(1) Changes in technology, regulation, or BLM policy; or

(2) Operator non-compliance with the terms or conditions of approval of the off-lease measurement approval or §§ 3173.90 through 3173.94.

(b) The BLM will notify the operator in writing of the effective date of the

termination and any inconsistencies or deficiencies with its off-lease measurement approval that serve as the reason(s) for termination. The operator must correct any inconsistencies or deficiencies that the BLM identifies, provide any additional information the AO requests, or request an extension of time from the AO within 20 business days after receipt of the BLM's notice, or the off lease measurement approval terminates on the effective date.

(c) The operator may terminate the off-lease measurement by submitting a Sundry Notice to the BLM. The Sundry Notice must identify the new FMP(s) for the lease(s), unit(s), or CA(s) previously subject to the off-lease measurement approval.

(d) If off-lease measurement is terminated, each lease, unit PA, or CA that was subject to the off-lease measurement approval may require a new FMP number(s) or a new off-lease measurement approval. Operators will have 30 days to apply for a new FMP number or off-lease measurement approval, whichever is applicable. The existing FMP number may be used for production reporting until a new FMP number is assigned or off-lease measurement is approved.

**§ 3173.96 Instances not constituting off-lease measurement, for which no approval is required.**

(a) If the approved FMP is located on the well pad of a directionally or horizontally drilled well that produces oil and gas from a lease, unit, or communitized area on which the well pad is not located, measurement at the FMP does not constitute off-lease measurement. However, if the FMP is located off of the well pad, regardless of distance, measurement at the FMP constitutes off-lease measurement, and BLM approval is required under §§ 3173.90 through 3173.94.

(b) If a lease, unit, or CA consists of more than one separate tract whose boundaries are not contiguous (*e.g.,* a single lease comprises two or more separate tracts), measurement of production at an FMP located on one of the tracts is not considered to be off-lease measurement if:

(1) The production is moved from one tract within the same lease, unit, or communitized area to another area of the lease, unit, or communitized area on which the FMP is located; and

(2) Production is not diverted during the movement between the tracts before the FMP, except for production used royalty free.

**§ 3173.190 Immediate assessments for certain violations.**

Certain instances of noncompliance warrant the imposition of immediate assessments upon discovery, as prescribed in the following table. Imposition of these assessments does not preclude other appropriate enforcement actions:

TABLE 1 TO § 3173.190: VIOLATIONS SUBJECT TO AN IMMEDIATE ASSESSMENT

| Violation: | Assessment amount per violation: |
|---|---|
| 1. An appropriate valve on an oil storage tank was not effectively sealed, as required by § 3173.20 | $1,000 |
| 2. A Federal seal is removed without prior approval of the AO or AR, as required by § 3173.22 | 1,000 |
| 3. Oil was not properly measured before removal from storage for use on a different lease, unit, or CA, as required by § 3173.32(b) | 1,000 |
| 4. An FMP was bypassed, in violation of § 3170.22 | 1,000 |
| 5. Theft or mishandling of production was not reported to the BLM, as required by § 3173.40 | 1,000 |
| 6. Records necessary to determine quantity and quality of production were not retained, as required by § 3170.32 | 1,000 |
| 7. FMP application was not submitted, as required by § 3173.60 | 1,000 |
| 8. (i) For facilities that begin operation after [EFFECTIVE DATE OF FINAL RULE], BLM approval for off-lease measurement was not obtained before removing production, as required by § 3173.91 | |
| (ii) Facilities that were in operation on or before [EFFECTIVE DATE OF FINAL RULE], are subject to an assessment if they do not have an existing BLM approval for off-lease measurement | 1,000 |
| 9. (i) For facilities that begin operation after [EFFECTIVE DATE OF FINAL RULE], BLM approval for surface commingling was not obtained before removing production, as required by § 3173.71 | |
| (ii) Facilities that were in operation on or before [EFFECTIVE DATE OF FINAL RULE], are subject to an assessment if they do not have an existing BLM approval for surface commingling | 1,000 |
| 10. (i) For facilities that begin operation after [EFFECTIVE DATE OF FINAL RULE], BLM approval for downhole commingling was not obtained before removing production, as required by § 3173.71 | |
| (ii) Facilities that were in operation on or before [EFFECTIVE DATE OF FINAL RULE], are subject to an assessment if they do not have an existing BLM approval for downhole commingling | 1,000 |

## Appendix A to Subpart 3173—Examples of Site Facility Diagrams

*I. Diagrams*

1. Site Facility Diagrams and Sealing of Valve Introduction

2. Diagrams

| Diagrams | Appendix pages | Description |
|---|---|---|
| I–A | 1–1 | Simple gas well without equipment. |
| I–B | 1–2 | Simple gas well with equipment. |
| I–C | 1–3 thru 1–5 | Single operator with co-located facilities single oil tank, gas, and water storage. |
| I–D | 1–6 and 1–8 | Oil sales with multiple oil tanks, gas, and water storage. |
| I–E | 1–9 thru 1–12 | Co-located facilities with multiple operators, oil sales by Lease Automatic Custody Transfer (LACT) system, gas, and water storage. |
| I–F | 1–13 thru 1–16 | On-lease gas plant, with oil sales by LACT, Liquefied Petroleum Gas (LPG)/Natural Gas Liquids (NGL) sales by LACT, inlet gas, tailgate gas, flared or vented and plant process gas used. |

| Diagrams | Appendix pages | Description |
|---|---|---|
| I–G | 1–17 thru 1–19 | Enhanced recovery water injection or other water disposal facility. |
| I–H | 1–20 thru 1–22 | Pod Facility. |
| I–I | 1–23 thru 1–25 | Water recycle system with water disposal options by pipeline or truck. |

1. *Site Facility Diagrams and Sealing of Valve Introduction Appendix to 3173* is provided not as a requirement but solely as an example to aid operators, purchasers, and transporters in determining what valves are considered to be ''appropriate valves'' subject to the seal requirements of this proposed rule, and to aid in the preparation of facility diagrams. It is impossible to include every type of equipment that could be used or situation that could occur in production activities. In making the determination of what is an ''appropriate valve,'' the entire facility must be considered as a whole, including the facility size, the equipment type, and the on-going activities at the facility. The signature block, in which a company representative certifies each diagram's accuracy, may be placed directly on the diagram or on a separate piece of paper accompanying the diagram. As shown in this appendix, the signature block may appear in a box or as a line of text.

BILLING CODE 4310–84–P

I-A

Facility Operator/Owner Name: ABC Oil and Gas

Federal/Indian Lease, unit PA, or CA Number: NMNM12345

Land Description: New Mexico Principal Meridian,
T. 36 N., R. 11 W., sec. 2, NW1/4NE1/4

Page 1 of 1

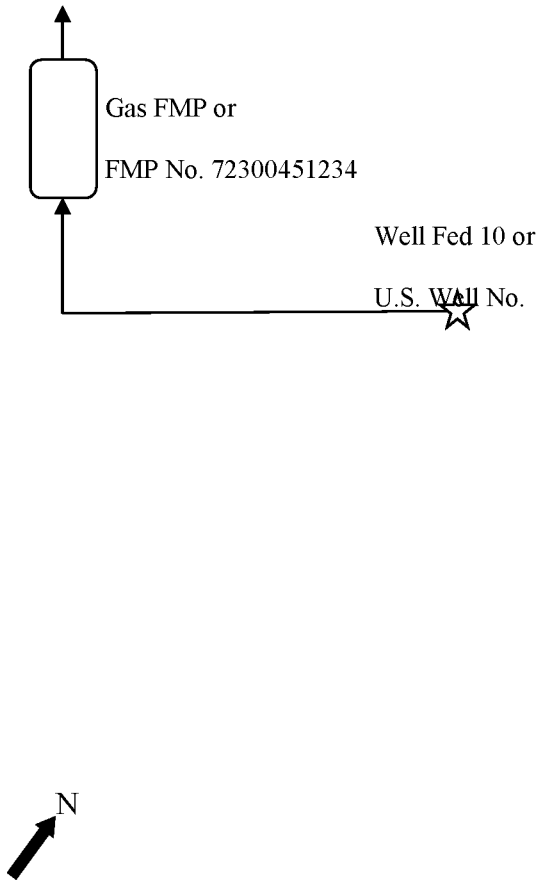

I-B

Facility Operator/Owner Name: ABC Oil and Gas

Federal/Indian Lease, unit PA, or CA Number: NMNM12345

Land Description: New Mexico Principal Meridian,
T. 36 N., R. 11 W., sec. 2, NW1/4NE1/4

Page 1 of 1

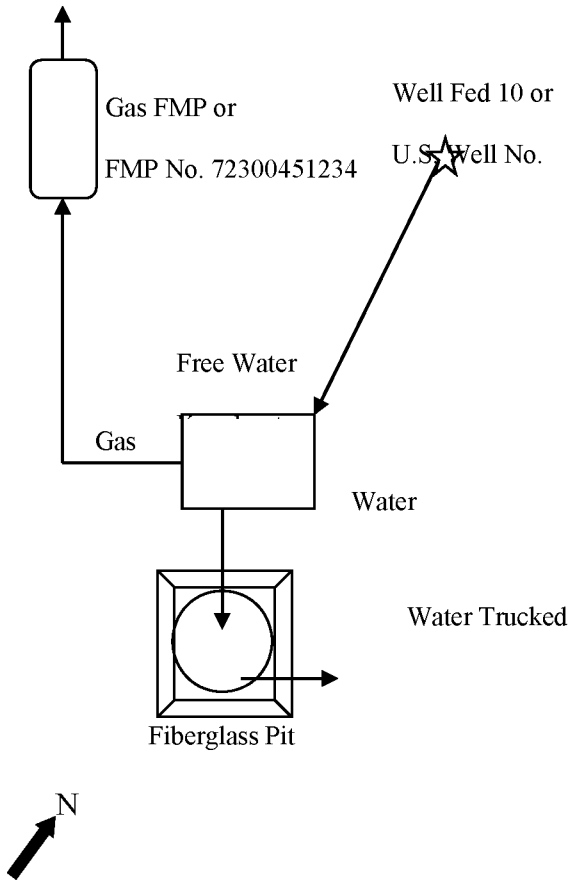


Free Water Knockout Manufacturer: XYZ Equipment
Serial No. F-9876
Gas Usage less than 0.1 Mcf/day

I-C
Page 1 of 3

Facility Operator/Owner Name: ABC Oil and Gas Federal/Indian Lease, unit PA, or CA Number: NMNM12345 and NMNM54
Land Description: New Mexico Principal Meridian, T. 36 N., R. 11 W., sec. 2, NW1/4NE1/4

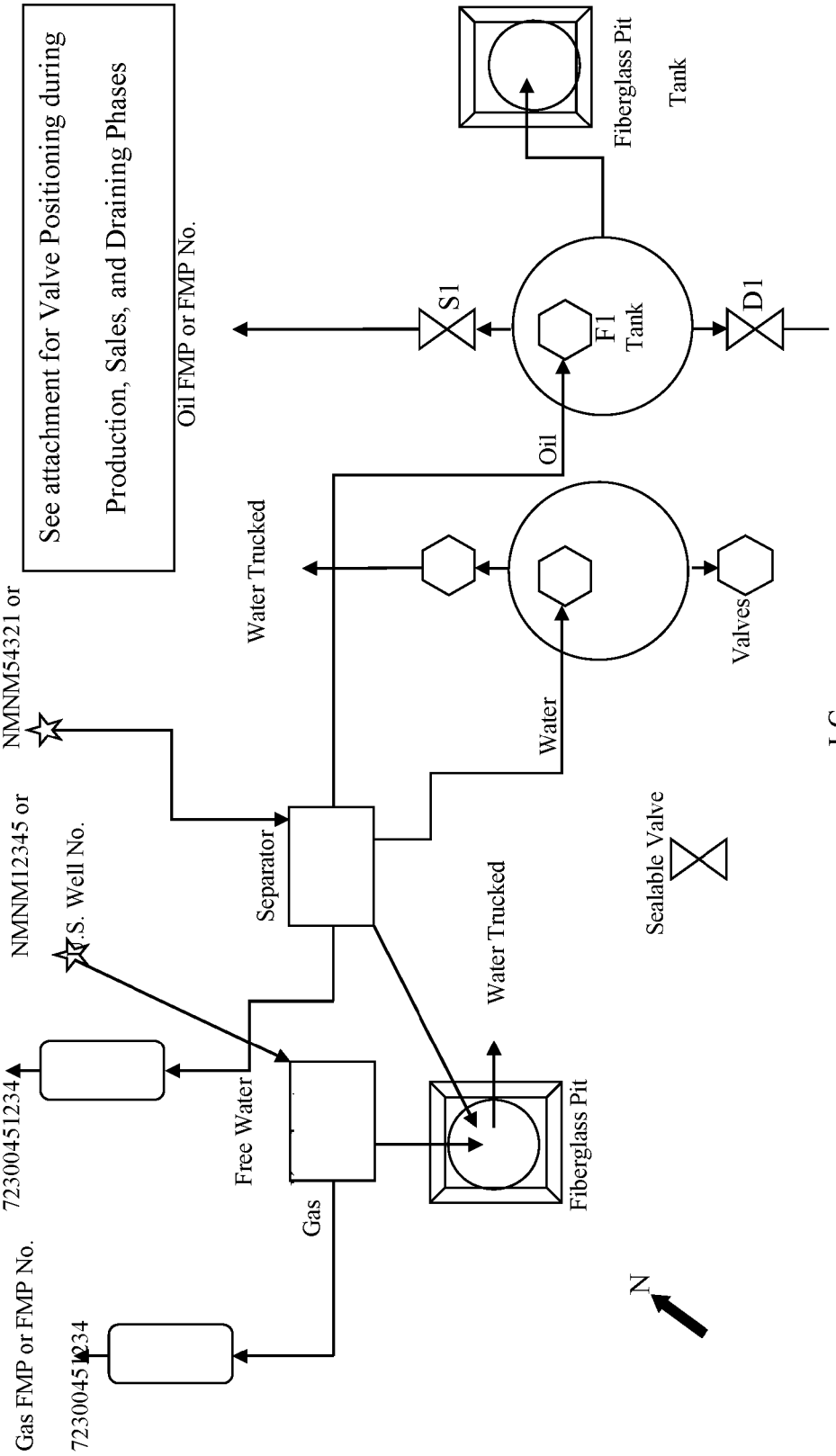


I-C

Appendix

Page 2 of 3

Facility Operator/Owner Name: ABC Oil and Gas Federal/Indian Lease, unit PA, or CA Number: NMNM12345

Land Description: New Mexico Principal Meridian, T. 36 N., R. 11 W., sec. 2, NW1/4NE1/4

Diagram #I-C:
F1 is the Fill Valve
S1 is the Sales Valve
D1 is the Drain Valve

Valve Positioning in the Production Phase
Production into T5678
S1 is Sealed Closed
F1 is Open
D1 is Sealed Closed

Valve Positioning in the Sales Phase for
Sales from T5678
S1 is Open
F1 is Open
D1 is Sealed Closed

Valve Positioning in the Drain Phase for
Draining from T5678
S1 is Sealed Closed
F1 is Open
D1 is Open

Free Water Knockout Manufacturer: XYZ Equipment
Serial No. F-9876

Gas Usage less than 0.1 Mcf/day

I-C
Page 3 of 3

Facility Operator/Owner Name: ABC Oil and Gas Federal/Indian Lease, unit PA, or CA Number: NMNM12345

Land Description: New Mexico Principal Meridian, T. 36 N., R. 11 W., sec. 2, NW1/4NE1/4

Separator Manufacturer: XYZ Equipment
Serial No. F-9876
Fire box rated at 150,000 btu/hour (btu/hr) operated 4 months/year (mo/yr), 20 hours/day (hrs/day)
150,000 btu/hr ÷ 1157 btu/cubic foot (btu/$ft^3$) (see current gas analysis) X 20 hrs ÷ 1000 = 2.51 Mcf/day

Pump Jack Manufacturer: Hy-Lift Pumps
Serial No.: 78563-P
Manufacturer fuel use when operated at 75% of rated maximum RPM, 5.87 Mcf/hr X operating 12 hrs. = 70.44 Mcf/day

Water Tank Manufacturer: Super Tanks
Tank Serial No. 3589412-Tank Heater rated at 200,000 btu/hr operated 4 mo/yr, 10 hrs/week,
200,000 btu/hr ÷ 1157 btu/$ft^3$ (see current gas analysis) X 40 hrs/mo ÷ 1000 = 6.91 MCF/mo.

Oil Tank Manufacturer: Super Tanks
Tank No.: 5678
Tank Serial No. 5863281-Tank Heater rated at 200,000 btu/hr operated 4 mo/yr, 5 hrs/week
200,000 btu/hr ÷ 1157 btu/$ft^3$ (see current gas analysis) X 20 hrs/mo ÷ 1,000 = 3.46 Mcf/mo.

I-D

Facility Operator/Owner Name: ABC Oil and Gas Federal/Indian Lease, unit PA, or CA Number: NMNM12345

Land Description: New Mexico Principal Meridian, T. 36 N., R. 11 W., sec. 2, NW1/4NE1/4

Page 1 of 3

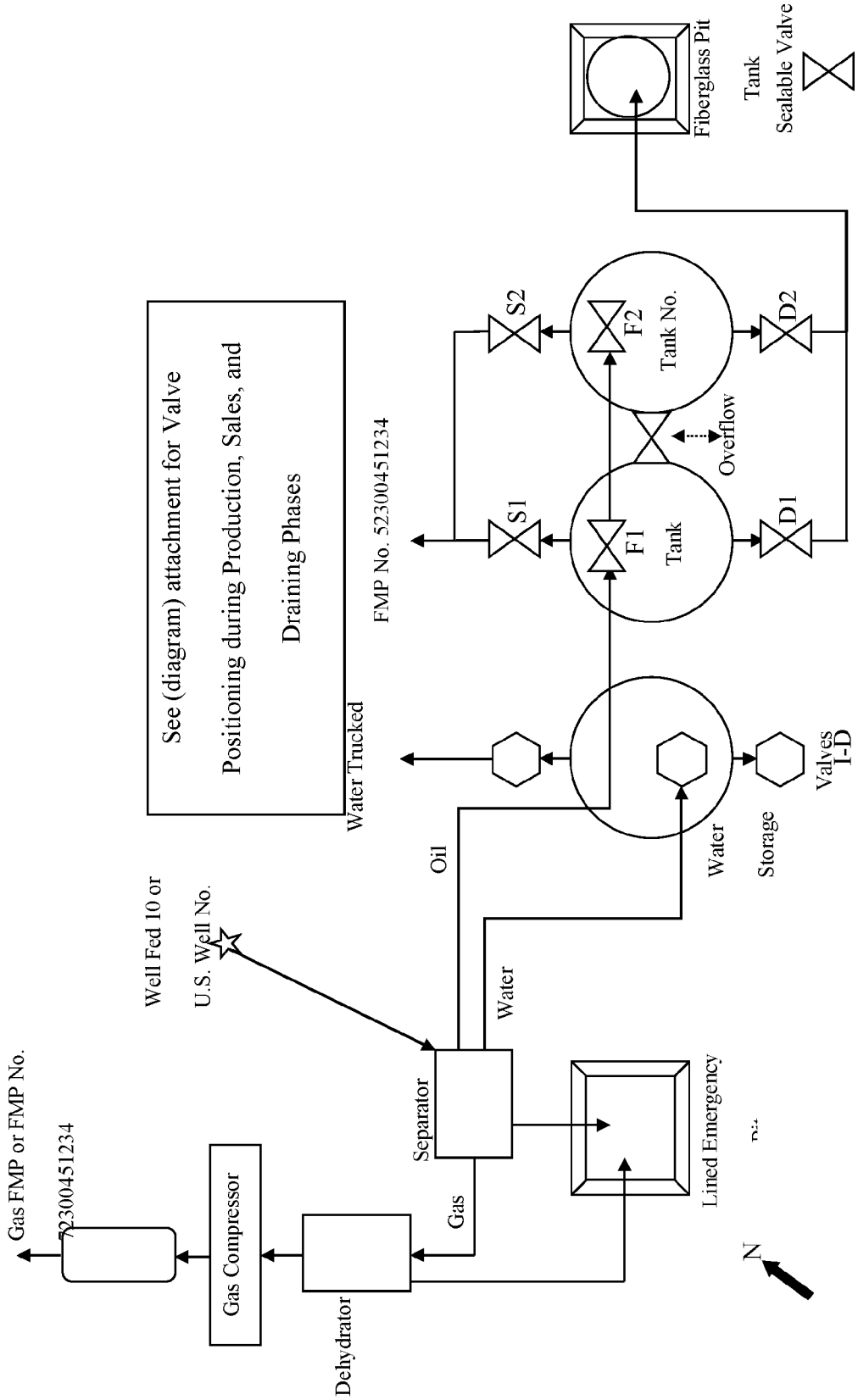

Appendix
Page 2 of 3

Facility Operator/Owner Name: ABC Oil and Gas Federal/Indian Lease, unit PA, or CA Number: NMNM12345

Land Description: New Mexico Principal Meridian, T. 36 N., R. 11 W., sec. 2, NW1/4NE1/4

Diagram #I-D:
F1 and F2 are Fill Valves
S1 and S2 are Sales Valves
D1 and D2 are Drain Valves

Valve Positioning in the Production Phase for

| Production into T5678 | Production into T1234 |
|---|---|
| S1 and D1 are Sealed Closed | S2 and D2 are Sealed Closed |
| Overflow is Open | Overflow is Open |
| F1 or F2 are Open | F1 or are F2 Open |

Valve Positioning in the Sales Phase for

| Sales from T5678 through S1: | Sales from T1234 through S2: |
|---|---|
| D1 and F1 are Sealed Closed | D2 and F2 are Sealed Closed |
| Overflow is Sealed Closed | Overflow is Sealed Closed |
| S1 is Open | S2 is Open |

Valve Positioning in the Drain Phase for

| Draining from T5678 | Draining from T1234 |
|---|---|
| S1 and F1 are Sealed Closed | S2 and F2 are Sealed Closed |
| Overflow is Sealed Closed | Overflow is Sealed Closed |
| D1 is Open | D2 is Open |

Compressor Manufacturer: Maximum Compression
Compressor Serial No.: SWS-586324-D
Manufacturer fuel use when operated at 80% of rated maximum, 24.87 Mcf/hr X 24 hrs. = 596.88 Mcf/day

I-D
Page 3 of 3

Facility Operator/Owner Name: ABC Oil and Gas Federal/Indian Lease, unit PA, or CA Number: NMNM12345

Land Description: New Mexico Principal Meridian, T. 36 N., R. 11 W., sec. 2, NW1/4NE1/4

Compressor Manufacturer: Maximum Compression
Compressor Serial No.: SWS-586324-D
Manufacturer fuel use when operated at 80% of rated maximum, 24.87 Mcf/hr X 24 hrs. = 596.88 Mcf/day

Dehydrator Manufacturer: XYZ Equipment
Serial No. 5423895358
Fire box rated at 75,000 btu/hr operated, 20 hrs/day
75,000 btu/hr ÷ 1,157 btu/$ft^3$ (see current gas analysis) X 24 ÷ 1,000 = 1.56 Mcf/day

Separator Manufacturer: XYZ Equipment
Serial No. F-9876
Fire box rated at 150,000 btu/hr operated 4 mo/yr, 20 hrs/day
150,000 btu/hr ÷ 1,157 btu/$ft^3$ (see current gas analysis) X 20 hrs ÷1,000 = 2.59 Mcf/day

Water Tank Manufacturer: Super Tanks
Tank Serial No. 3589412-Tank Heater rated at 200,000 btu/hr operated 4 mo/yr, 10 hrs/week, 70% efficiency
200,000 btu/hr ÷ 1,157 btu/$ft^3$ (see current gas analysis) X 40 hrs/mo ÷ 1,000 = 6.91 Mcf/mo.

Oil Tank Manufacturer: Super Tanks
Tank No.: 5678
Tank Serial No. 5863281-Tank Heater rated at 200,000 btu/hr operated 4 mo/yr, 5 hrs/week
200,000 btu/hr ÷ 1,157 btu/$ft^3$ (see current gas analysis) X 20 hrs/mo ÷ 1,000 = 3.46 Mcf/mo.

Oil Tank Manufacturer: Unknown
Tank No.: 1234
Tank Serial No. N/A-Tank Heater rated at 200,000 btu/hr operated 4 mo/yr, 5 hrs/week
200,000 btu/hr ÷ 1,157 btu/$ft^3$ (see current gas analysis) X 20 hrs/mo ÷ 1,000 = 3.46 Mcf/mo.

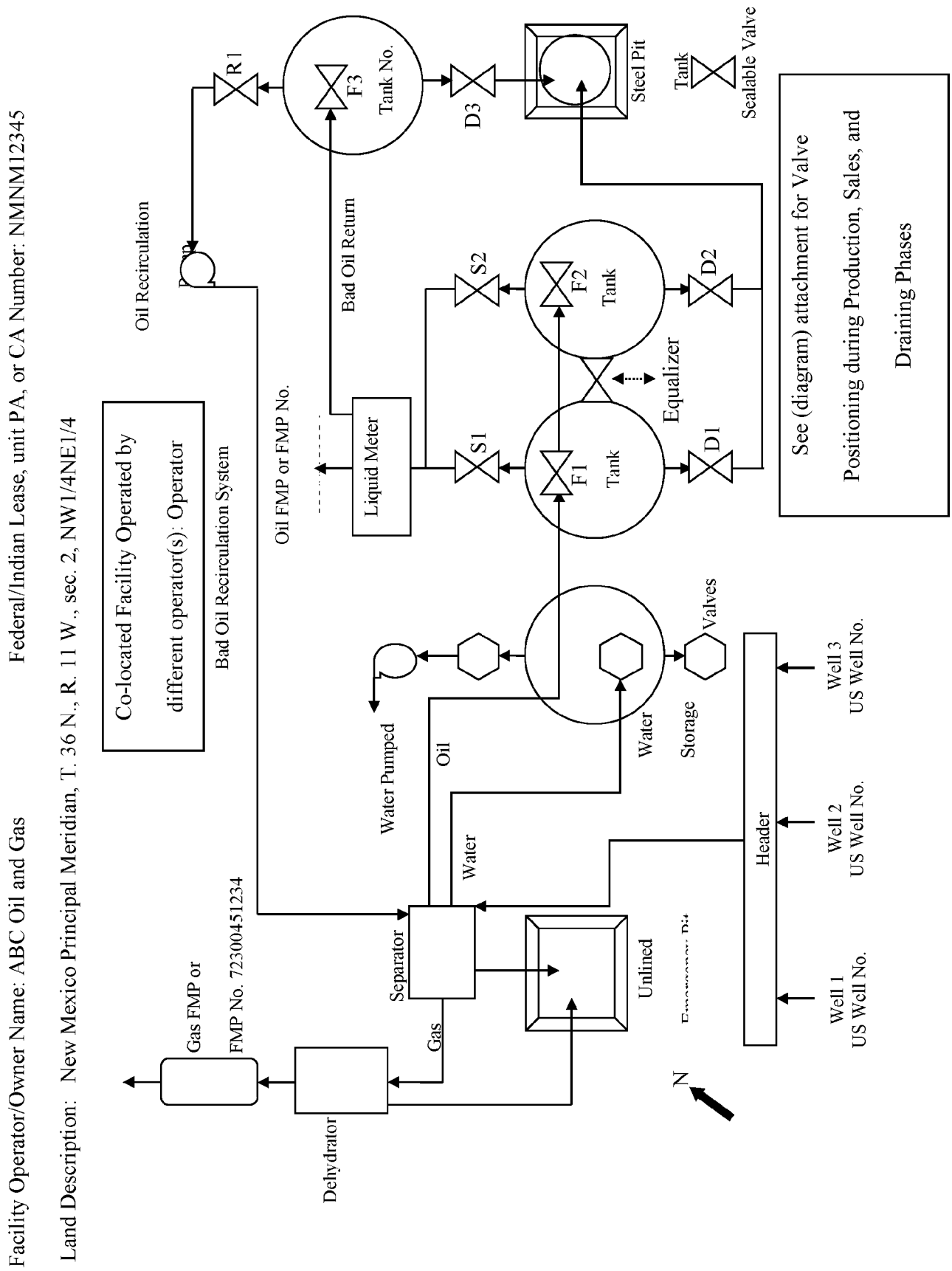
I-E
Page 1 of 4
Facility Operator/Owner Name: ABC Oil and Gas
Federal/Indian Lease, unit PA, or CA Number: NMNM12345
Land Description: New Mexico Principal Meridian, T. 36 N., R. 11 W., sec. 2, NW1/4NE1/4
Co-located Facility Operated by different operator(s): Operator
Bad Oil Recirculation System
Oil FMP or FMP No.
Bad Oil Return
Oil Recirculation
R1
F3
Tank No.
D3
Steel Pit
Tank
Sealable Valve
See (diagram) attachment for Valve Positioning during Production, Sales, and Draining Phases
S2
F2
Tank
D2
Equalizer
Liquid Meter
S1
F1
Tank
D1
Water Pumped
Oil
Water
Storage
Valves
Header
Well 3
US Well No.
Well 2
US Well No.
Well 1
US Well No.
Separator
Gas
Unlined
Gas FMP or
FMP No. 72300451234
Dehydrator
N

Appendix
Page 2 of 4

Facility Operator/Owner Name: ABC Oil and Gas Federal/Indian Lease, unit PA, or CA Number: NMNM12345

Land Description: New Mexico Principal Meridian, T. 36 N., R. 11 W., sec. 2, NW1/4NE1/4

Diagram #I-E:
F1, F2 and F3 are Fill Valves
S1 and S2 are Sales Valves
D1 and D2 are Drain Valves
R1 is a Recirculation Valve

Valve Positioning in the Production Phase for
Production into T5678, T1234 and 6851
S1, F1, F2, F3 and R1 are Open
D1 and D2 are Sealed Closed
Equalizer is open

Valve Positioning in the Sales Phase for
Production into T5678, T1234 and 6851
S1, F1, F2, F3 and R1 are Open
D1 and D2 are Sealed Closed
Equalizer is open

Valve Positioning in the Drain Phase for

Draining from T5678
S1 and F1 are Sealed Closed
Equalizer is Sealed Closed
D1 and S2 are Open
D2 is Sealed Closed

Draining from T1234
S2 and F2 are Sealed Closed
Equalizer is Sealed Closed
D2 and S1 are Open
D1 is Sealed Closed

Dehydrator Manufacturer: XYZ Equipment
Serial No. 5423895358

Fire box rated at 75,000 btu/hr operated 24 hrs/day, 20 hrs/day
75,000 btu/hr ÷ 1,157 btu/$ft^3$ (see current gas analysis) X 24 ÷ 1,000 = 1.56 Mcf/day

I-E
Page 3 of 4

Facility Operator/Owner Name: ABC Oil and Gas Federal/Indian Lease, unit PA, or CA Number: NMNM12345

Land Description: New Mexico Principal Meridian, T. 36 N., R. 11 W., sec. 2, NW1/4NE1/4

Dehydrator Manufacturer: XYZ Equipment
Serial No. 5423895358
Fire box rated at 75,000 btu/hr operated 24 hrs/day, 20 hrs/day
75,000 btu/hr ÷ 1,157 btu/$ft^3$ (see current gas analysis) X 24 ÷ 1,000 = 1.56 Mcf/day

Separator Manufacturer: XYZ Equipment
Serial No. F-9876
Fire box rated at 150,000 btu/hr operated 4 mo/yr, 20 hrs/day
150,000 btu/hr ÷ 1,157 btu/$ft^3$ (see current gas analysis) X 20 ÷ 1,000 = 2.59 Mcf/day
Charge pump, water pump and oil recirculation pump are electric motor driven and not subject to beneficial use.
Valve Positioning in the Drain Phase for Tank No. 6851
R1 is Sealed Closed
F3 is Sealed Closed
D3 Open

I-E
Page 4 of 4

Facility Operator/Owner Name: ABC Oil and Gas Federal/Indian Lease, unit PA, or CA Number: NMNM12345

Land Description: New Mexico Principal Meridian, T. 36 N., R. 11 W., sec. 2, NW1/4NE1/4

The following components on liquid measurement metering system will be effectively sealed (list as appropriate) for oil FMP (or FMP No. 62300451234):

1. Sampler volume control;
2. All valves on lines entering or leaving the sample container excluding the safety pop-off valve (if so equipped). Each valve must be sealed in the open or closed position, as appropriate;
3. Mechanical counter head (totalizer) and meter head;
4. Stand-alone temperature averager monitor;
5. Non-automatic adjusting, fixed, back pressure valve pressure adjustment downstream of the meter;
6. Any drain valves larger than 1 inch in nominal diameter in the system; and
7. Right-angle drive.

I-F

Facility Operator/Owner Name: Oil and Gas Plant Operations Inc. Federal/Indian Lease, unit PA, or CA Number: NMNM12345

Land Description: New Mexico Principal Meridian, T. 36 N., R. 11 W., sec. 2, NW1/4NE1/4

Page 1 of 4

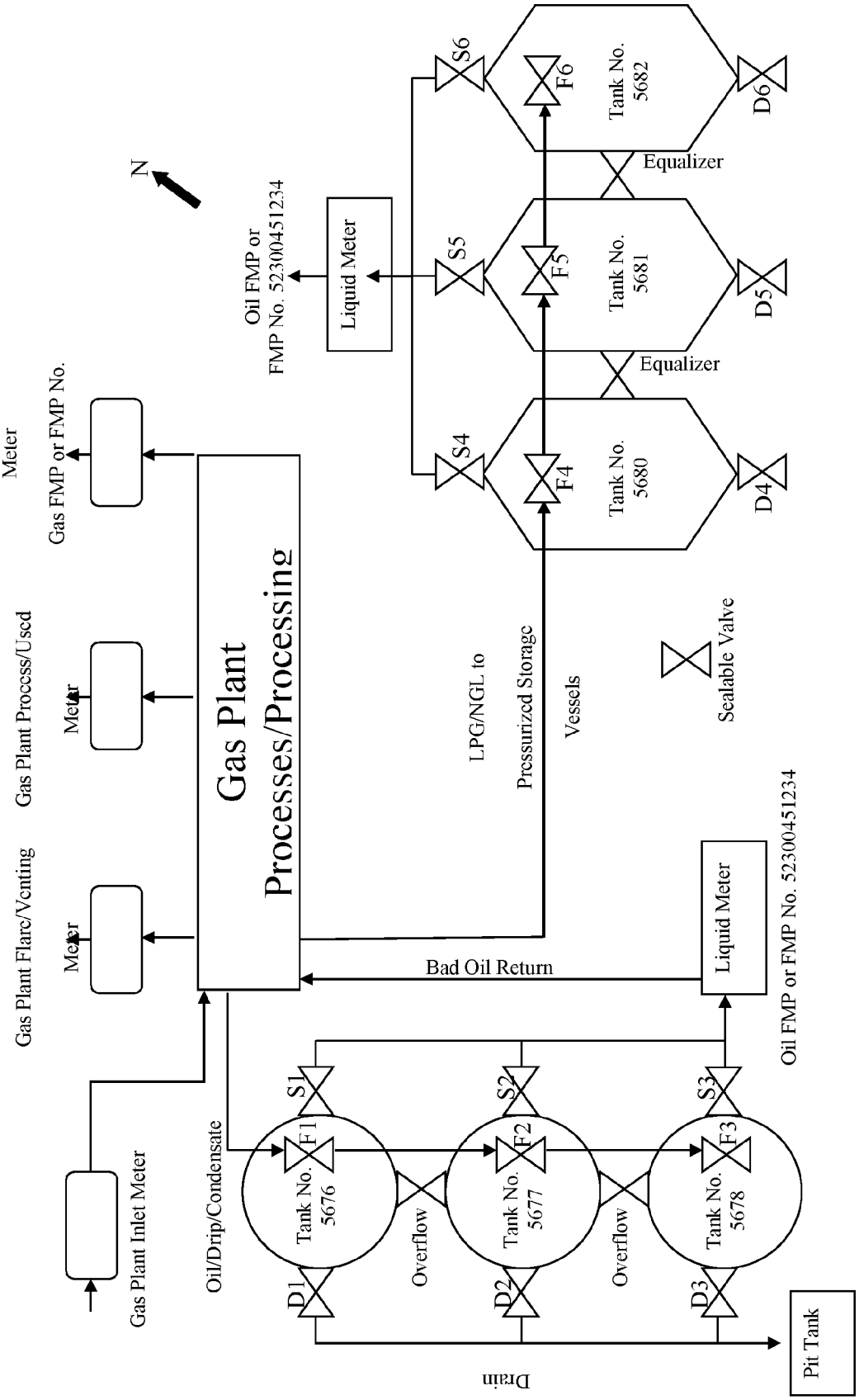

I-F
Appendix

Facility Operator/Owner Name: ABC Oil and Gas

Federal/Indian Lease, unit PA, or CA Number: NMNM12345

Land Description: New Mexico Principal Meridian,
T. 36 N., R. 11 W., sec. 2, NW1/4NE1/4

Page 2 of 4

Diagram #I-F:
F1, F2, F3, F4, F5, and F6 are Fill Valves
S1, S2, S3, S4, S5, and S6 are Sales Valves
D1, D2, D3, D4, D5 and D6 are Drain Valves

Valve Positioning in the Production Phase for

| Production into T5676: | Production into T5677: | Production into T5678: |
|---|---|---|
| D1 is Sealed Closed | D2 is Sealed Closed | D3 is Sealed Closed |

Valve Positioning in the Sales Phase for

| Sales from T5676 through S1: | Sales from T5677 through S2: | Sales from T5678: |
|---|---|---|
| D1 is Sealed Closed | D2 is Sealed Closed | D3 is Sealed Closed |

Valve Positioning in the Drain Phase for

| Draining from T5676: | Draining from T5677: | Draining from T5678: |
|---|---|---|
| S1 is Sealed Closed | S2 is Sealed Closed | S3 is Sealed Closed |
| F1 is Sealed Closed | F2 is Sealed Closed | F3 is Sealed Closed |
| Overflow is Sealed Closed | Overflow is Sealed Closed | Overflow is Sealed Closed |
| D1 is Open | D2 is Open | D3 is Open |

Valve Positioning in the Production Phase for

| Production into T5680: | Production into T5681: | Production into T5682: |
|---|---|---|
| S4 is Sealed Closed | S5 is Sealed Closed | S6 is Sealed Closed |
| D4 is Sealed Closed | D5 is Sealed Closed | D6 is Sealed Closed |

I-F

Facility Operator/Owner Name: ABC Oil and Gas

Federal/Indian Lease, unit PA, or CA Number: NMNM12345

Land Description: New Mexico Principal Meridian,
T. 36 N., R. 11 W., sec. 2, NW1/4NE1/4

Page 3 of 4

Valve Positioning in the Sales Phase for

| Sales from T5680 through S1: | Sales from T5681 through S2: | Sales from T5682: |
|---|---|---|
| S4 is Sealed Closed | S5 is Sealed Closed | S6 is Sealed Closed |
| D4 is Sealed Closed | D5 is Sealed Closed | D6 is Sealed Closed |

Valve Positioning in the Drain Phase for

| Draining from T5680: | Draining from T5681: | Draining from T5682: |
|---|---|---|
| S4 is Sealed Closed | S5 is Sealed Closed | S6 is Sealed Closed |
| F4 is Sealed Closed | F5 is Sealed Closed | F6 is Sealed Closed |
| Overflow is Sealed Closed | Overflow is Sealed Closed | Overflow is Sealed Closed |
| D4 is Open | D5 is Open | D6 is Open |

Gas Plant Inlet Meter
Meter Manufacturer: ABC Metering
Meter Serial No.: G-25684523
Meter Tube Manufacturer and Serial No.: Best Meter Tubes, VUH2635X

Gas Plant Flared/Venting Meter
Meter Manufacturer: ABC Metering
Meter Serial No.: R-25368456
Meter Tube Manufacturer and Serial No.: Best Meter Tubes, BAS23587ADD

Gas Plant Process/Used Meter
Meter Manufacturer: ABC Metering
Meter Serial No.: H-398742
Meter Tube Manufacturer and Serial No.: Best Meter Tubes, FG15783854HJK

I-F

Facility Operator/Owner Name: ABC Oil and Gas

Federal/Indian Lease, unit PA, or CA Number: NMNM12345

Land Description: New Mexico Principal Meridian,
T. 36 N., R. 11 W., sec. 2, NW1/4NE1/4

Page 4 of 4

Gas Plant Process/Used Meter
Meter Manufacturer: ABC Metering
Meter Serial No.: H-398742
Meter Tube Manufacturer and Serial No.: Best Meter Tubes, FG15783854HJK

The following components on liquid measurement metering system will be effectively sealed (list as appropriate) for oil FMP (or FMP No. 62300451234):

1. Sampler volume control;
2. All valves on lines entering or leaving the sample container excluding the safety pop-off valve (if so equipped). Each valve must be sealed in the open or closed position, as appropriate;
3. Mechanical counter head (totalizer) and meter head;
4. Stand-alone temperature averager monitor;
5. Non-automatic adjusting, fixed, back pressure valve pressure adjustment downstream of the meter;
6. Any drain valves larger than 1 inch in nominal diameter in the system; and
7. Right-angle drive.

I-G

Facility Operator/Owner Name: ABC Oil and Gas
NMNM98765
Land Description: New Mexico Principal Meridian,
T. 36 N., R. 11 W., sec. 2, NW1/4NE1/4

Federal/Indian Lease, unit PA, or CA Number:

Page 1 of 3

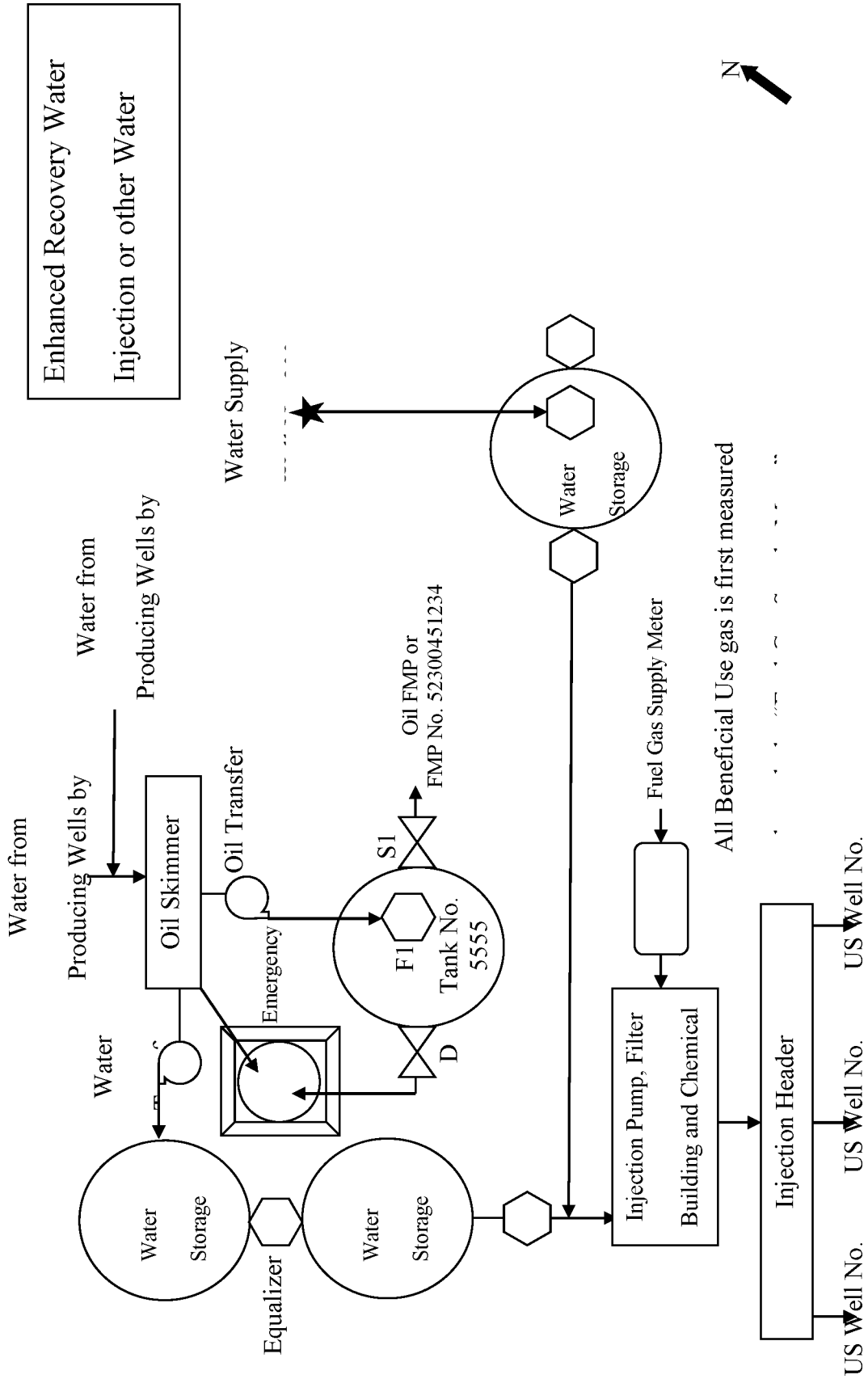

I-G
Appendix

Facility Operator/Owner Name: ABC Oil and Gas
Land Description: New Mexico Principal Meridian,
T. 36 N., R. 11 W., sec. 2, NW1/4NE1/4

Federal/Indian Lease, unit PA, or CA Number: NMNM98765

Page 2 of 3

Diagram #I-G:
F1 is the Fill Valve
S1 is the Sales Valve
D1 is the Drain Valve

Valve Positioning in the Production Phase for
Production into T5555
S1 is Sealed Closed
F1 is Open
D1 is Sealed Closed

Valve Positioning in the Sales Phase for
Sales from T5555
S1 is Open
F1 is Open
D1 is Sealed Closed

Valve Positioning in the Drain Phase for
Draining from T5555
S1 is Sealed Closed
F1 is Open
D1 is Open

Oil Tank Manufacturer: Super Tanks
Tank No.: 5555
Tank Serial No. 5863281

I-G
Page 3 of 3:

Fuel gas meter
Meter Manufacturer: ABC Metering
Meter Serial No.: F-258645
Meter Tube Manufacturer and Serial No.: Best Meter Tubes, DRFG254

I-H

Facility Operator/Owner Name: ABC Oil and Gas
NMNM98765
Land Description: New Mexico Principal Meridian,
T. 36 N., R. 11 W., sec. 2, NW1/4NE1/4

Federal/Indian Lease, unit PA, or CA Number:

Page 1 of 4

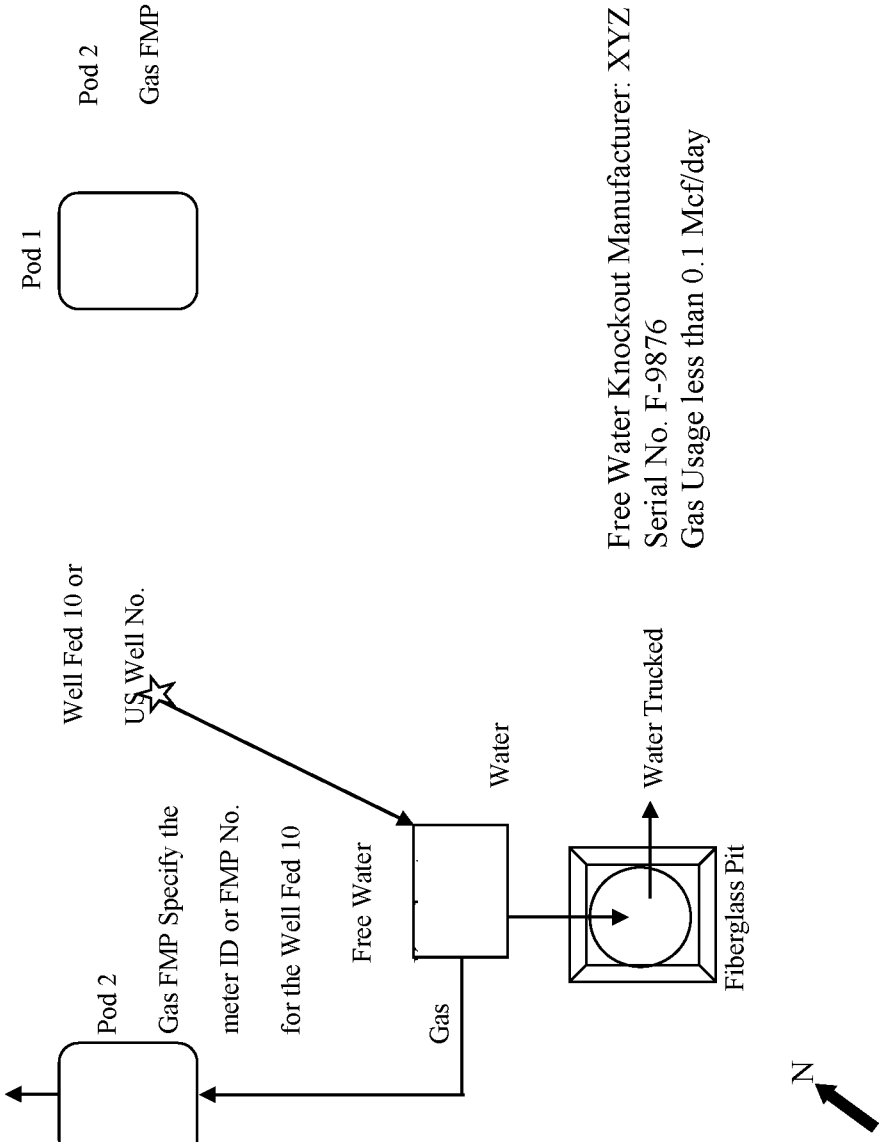

I-H

Facility Operator/Owner Name: ABC Oil and Gas
NMNM98765
Land Description: New Mexico Principal Meridian,
T. 36 N., R. 11 W., sec. 2, NW1/4NE1/4

Federal/Indian Lease, unit PA, or CA Number:

Page 2 of 3

POD Facility
2

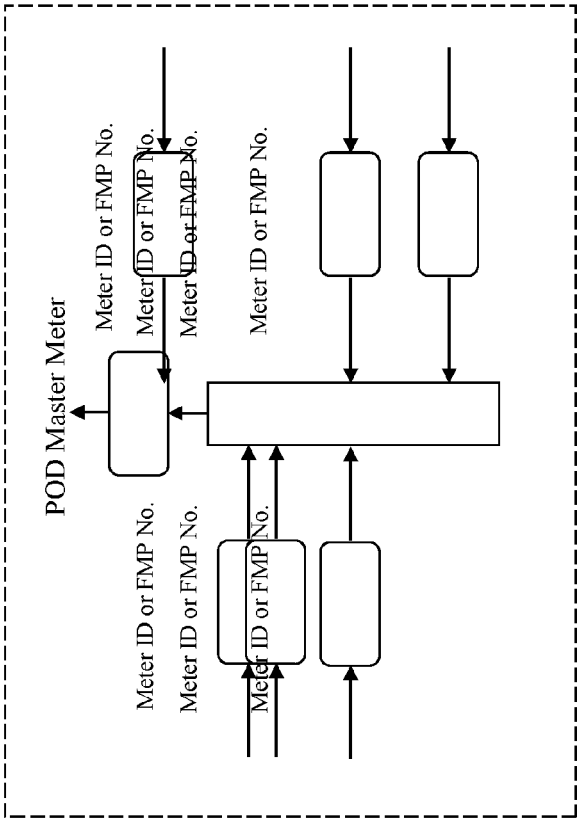


POD Facility
1

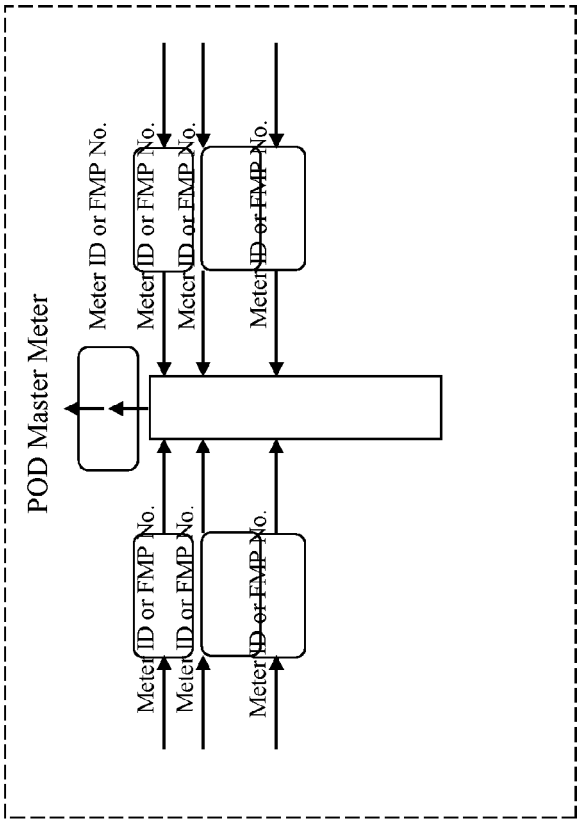

I-H

Facility Operator/Owner Name: ABC Oil and Gas Federal/Indian Lease, unit PA, or CA Number: NMNM98765

Land Description: New Mexico Principal Meridian, T. 36 N., R. 11 W., sec. 2, NW1/4NE1/4

Page 3 of 3

POD 1
Master ID or FMP No.

Meter ID or FMP No. Meter ID or FMP No.
Federal/Indian Lease, unit PA, or CA Number: NMNM98765 Federal/Indian Lease, unit PA, or CA Number: NMNM98765

Meter ID or FMP No. Meter ID or FMP No.
Federal/Indian Lease, unit PA, or CA Number: NMNM1234A Federal/Indian Lease, unit PA, or CA Number: NMNM56789D

Meter ID or FMP No. Meter ID or FMP No.
Federal/Indian Lease, unit PA, or CA Number: NMSF10254 Federal/Indian Lease, unit PA, or CA Number: NMSF10254

POD 1
Master ID or FMP No.

Meter ID or FMP No. Meter ID or FMP No.
Federal/Indian Lease, unit PA, or CA Number: NMNM56789 Federal/Indian Lease, unit PA, or CA Number: NMNM54321A

Meter ID or FMP No. Meter ID or FMP No.
Federal/Indian Lease, unit PA, or CA Number: NMNM1234C Federal/Indian Lease, unit PA, or CA Number: NMNM56789B

Meter ID or FMP No. Meter ID or FMP No.
Federal/Indian Lease, unit PA, or CA Number: NMSF10983 Federal/Indian Lease, unit PA, or CA Number: NMSF10254

I-I

Facility Operator/Owner Name: ABC Oil and Gas Federal/Indian Lease, unit PA, or CA Number: NMNM12345

Land Description: New Mexico Principal Meridian, T. 36 N., R. 11 W., sec. 2, NW1/4NE1/4 Page 1 of 3

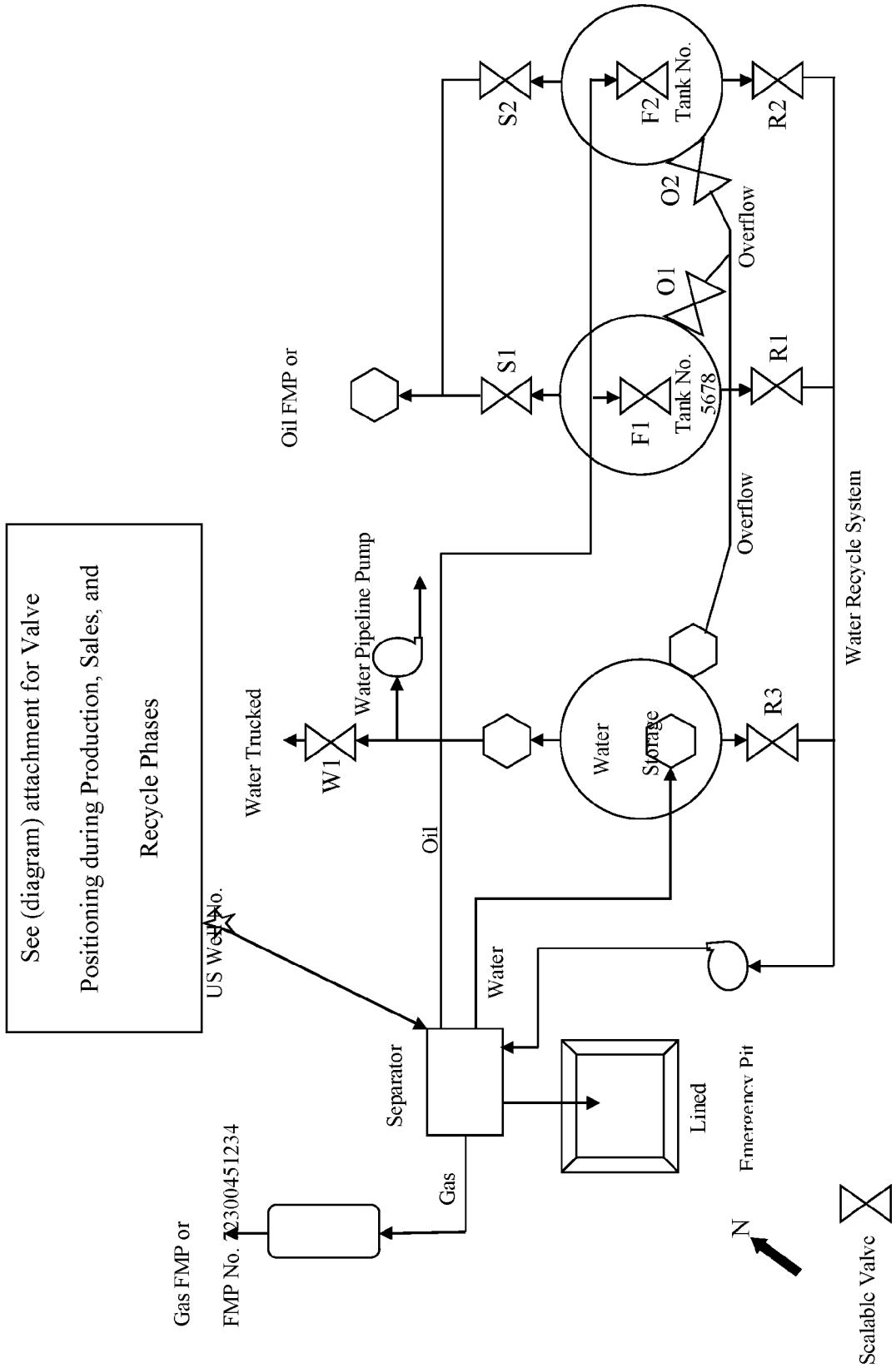

I-I
Appendix
Page 2 of 3

Facility Operator/Owner Name: ABC Oil and Gas Federal/Indian Lease, unit PA, or CA Number: NMNM12345
Land Description: New Mexico Principal Meridian, T. 36 N., R. 11 W., sec. 2, NW1/4NE1/4

Diagram #I-I:
F1 and F2 are Fill Valves
S1 and S2 are Sales Valves
R1, R2, and R3 are Recycle Valves
O1 and O2 are Overflow Valves

Valve Positioning in the Production Phase

| Production into T5678 | Production into T1234 |
|---|---|
| S1 and D1 are Sealed Closed | S2 and D2 are Sealed Closed |
| O1 and O2 are Open | O1 and O2 are Open |
| F1 or F2 are Open | F1 or F2 are Open |

Valve Positioning in the Sales Phase

| Sales from T5678 through S1: | Sales from T1234 through S2: |
|---|---|
| D1, F1, and O1 are Sealed Closed | D2, F2, and O2 are Sealed Closed |
| S1 is Open | S2 is Open |

Valve Positioning in the Recycle Phase

| Recycle from T5678 | Recycle from T1234 |
|---|---|
| S1 is Sealed Closed | S2 is Sealed Closed |
| F1, O1, O2 and R1 are Open | F1, O1, O2, and R2 are Open |

Water storage valve W1 is Sealed Closed except for loading water to truck. Note: Not required by BLM standards.

I-I
Appendix
Page 3 of 3

Facility Operator/Owner Name: ABC Oil and Gas Federal/Indian Lease, unit PA, or CA Number: NMNM12345

Land Description: New Mexico Principal Meridian, T. 36 N., R. 11 W., sec. 2, NW1/4NE1/4

Separator Manufacturer: XYZ Equipment
Serial No. F-9876
Fire box rated at 150,000 btu/hr operated 4 mo/yr, 20 hrs/day
150,000 btu/hr ÷ 1,157 btu/ft$^3$ (see current gas analysis) X 20 hrs ÷1,000 = 2.59 Mcf/day

Water Tank Manufacturer: Super Tanks
Tank Serial No. 3589412Tank Heater rated at 200,000 btu/hr operated 4 mo/yr, 10 hrs/week, 70% efficiency
200,000 btu/hr ÷ 1,157 btu/ft$^3$ (see current gas analysis) X 40 hrs/mo ÷ 1,000 = 6.91 Mcf/mo.

Oil Tank Manufacturer: Super Tanks
Tank No. 5678
Tank Serial No. 5863281-Tank Heater rated at 200,000 btu/hr operated 4 mo/yr, 5 hrs/week
200,000 btu/hr ÷ 1,157 btu/ft$^3$ (see current gas analysis) X 20 hrs/mo ÷ 1,000 = 3.46 Mcf/mo.

Oil Tank Manufacturer: Unknown
Tank No. 1234
Tank Serial No. N/A-Tank Heater rated at 200,000 btu/hr operated 4 mo/yr, 5 hrs/week
200,000 btu/hr ÷ 1,157 btu/ft$^3$ (see current gas analysis) X 20 hrs/mo ÷ 1,000 = 3.46 Mcf/mo.

Water pipeline pump and recycle pump powered by gasoline engines and not subject to beneficial use.

BILLING CODE 4310–84–C

■ 4. Revise subpart 3174 to read as follows:

**Subpart 3174—Measurement of Oil**

Sec.
3174.10 Definitions and acronyms.
3174.20 General requirements.
3174.30 Incorporation by reference (IBR).
3174.31 Specific measurement performance requirements.

3174.40 Approved measurement equipment and data requirements.
3174.41 Measurement equipment requiring BLM approval.
3174.42 Approved measurement equipment.
3174.43 Data submission and notification requirements.
3174.50 Grandfathering.
3174.60 Timeframes for compliance.
3174.70 Measurement location.
3174.80 Oil storage tank equipment.
3174.81 Oil measurement by tank gauging.
3174.82 Oil tank calibration.
3174.83 Tank gauging procedures.
3174.84 Tank oil sampling.
3174.85 Determining S&W content.
3174.86 Tank oil temperature determination.
3174.87 Observed oil gravity determination.
3174.88 Measuring tank fluid level.
3174.90 LACT systems—general requirements.
3174.100 LACT systems—components and operating requirements.
3174.101 Charging pump and motor.
3174.102 Sampling and mixing system.
3174.103 Air eliminator.
3174.104 LACT meter.
3174.105 Electronic temperature averaging device.
3174.106 Pressure-indicating device.
3174.107 Meter-proving connections.
3174.108 Back-pressure and check valves.
3174.110 Coriolis meter operating requirements.
3174.120 Electronic liquids measurement, ELM (secondary and tertiary device).
3174.121 Measurement data system (MDS).
3174.130 Coriolis measurement systems (CMS)—general requirements and components.
3174.140 Temporary measurement.
3174.150 Meter-proving requirements.
3174.151 Meter prover.
3174.152 Meter-proving runs.
3174.153 Minimum proving frequency.
3174.154 Excessive meter factor deviation.
3174.155 Verification of the temperature transducer.
3174.156 Verification of the pressure transducer (if applicable).
3174.157 Density verification (if applicable).
3174.158 Meter proving reporting requirements.
3174.160 Measurement tickets.
3174.161 Tank gauging measurement ticket.
3174.162 LACT system and CMS measurement ticket or volume statement.
3174.170 Oil measurement by other methods.
3174.180 Determination of oil volumes by methods other than measurement.
3174.190 Immediate assessments.

### § 3174.10 Definitions and acronyms.

(a) As used in this subpart, the term:

*Barrel (bbl)* means 42 standard United States gallons.

*Base pressure* means:

(i) 0.0 pounds per square inch, gauge (psig);

(ii) 14.696 pounds per square inch, absolute (psia); or

(iii) Local atmospheric pressure for static measurement.

*Base temperature* means 60 °F.

*Certificate of calibration* means a document stating the base prover volume and other physical data required for the calibration of flow meters.

*Composite meter factor* means a meter factor corrected from normal operating pressure to base pressure. The composite meter factor is determined by proving operations where the pressure is considered constant during the measurement period between provings.

*Coriolis measurement system (CMS)* means a metering system using a Coriolis meter in conjunction with an ELM, tertiary device, pressure transducer, and temperature transducer in order to derive and report gross standard oil volume. A CMS system provides real-time, on-line measurement of oil.

*Coriolis meter* means a device, which determines a mass flow rate by means of the interaction between a flowing fluid and oscillation of tube(s). The meter also infers the density by measuring the natural frequency of the oscillating tubes. The Coriolis meter consists of sensors and a transmitter, which convert the output from the sensors to signals representing volume and density.

*Displacement prover* means a prover consisting of a pipe or pipes with known capacities, a displacement device, and detector switches, which sense when the displacement device has reached the beginning and ending points of the calibrated section of pipe. Displacement provers can be portable or fixed.

*Dynamic meter factor* means a kinetic meter factor derived by linear interpolation or polynomial fit, used for conditions where a series of meter factors have been determined over a range of normal operating conditions.

*Electronic liquids measurement (ELM)* means all the hardware and software necessary to convert indicated volume, meter factor, flowing temperature, and flowing pressure to a gross standard volume or net standard volume that is used to determine Federal royalty. This includes, but is not limited to, any BLM-approved meter, temperature transducer, pressure transducer, flow computer, display, memory, and any internal or external processes used to edit and present the data or values measured.

*Gross standard volume* means a volume of oil corrected to base pressure and temperature, and includes meter factor as applicable.

*High-volume FMP* means any FMP that measures more than 1,500, but less than 15,000 bbl oil/month over the averaging period.

*Indicated volume* means the uncorrected volume indicated by the meter in a LACT system or the Coriolis meter in a CMS. For a positive displacement meter, the indicated volume is represented by the non-resettable totalizer on the meter head. For Coriolis meters, the indicated volume is the uncorrected (without the meter factor) mass of liquid divided by the density.

*Innage gauging* means the level of a liquid in a tank measured from the datum plate or tank bottom to the surface of the liquid.

*Lease automatic custody transfer (LACT) system* means a system of components designed to provide for the unattended custody transfer of oil produced from a lease(s), unit PA(s), or CA(s) to the transporting carrier while providing a proper and accurate means for determining the net standard volume and quality, and fail-safe and tamper-proof operations.

*Low-volume FMP* means any FMP that measures 1,500 bbl oil/month or less over the averaging period.

*Master meter prover* means a positive displacement meter or Coriolis meter that is selected, maintained, and operated to serve as the reference device for the proving of another meter. A comparison of the master meter to the Facility Measurement Point (FMP) line meter output is the basis of the master-meter method.

*Measurement period* means the duration between the opening date and time and closing date and time of a measurement ticket or QTR volume statement.

*Meter factor* means a ratio obtained by dividing the measured volume of liquid that passed through a prover or master meter during the proving by the measured volume of liquid that passed through the line meter during the proving, corrected to base pressure and temperature.

*Net standard volume* means the gross standard volume corrected for quantities of non-merchantable substances such as sediment and water.

*Positive displacement meter* means a meter that registers the volume passing through the meter using a system, which constantly and mechanically isolates the flowing liquid into segments of known volume.

*Quantity transaction record (QTR)* means a report generated by a flow computer on a LACT, CMS, or other system approved by the BLM that summarizes the daily and/or hourly volume calculated by the flow computer and the average or totals of the dynamic

data that is used in the calculation of gross standard volume. Volumes can be displayed as observed and/or gross standard volume, as required.

*Transducer* means an electronic device that converts a physical property, such as pressure, temperature, or electrical resistance, into an electrical output signal that varies proportionally with the magnitude of the physical property. Typical output signals are in the form of electrical potential (volts), current (milliamps), or digital pressure or temperature readings. The term transducer includes devices commonly referred to as transmitters.

*Vapor tight* means capable of holding pressure differential at the installed pressure-relieving or vapor-recovery devices' settings.

*Very-high-volume FMP* means any FMP that measures 15,000 bbl oil/month or more over the averaging period.

(b) As used in this subpart, the following acronyms carry the meaning prescribed:

*API* means American Petroleum Institute.

*CA* has the meaning set forth in § 3170.10 of this part.

*COA* has the meaning set forth in § 3170.10 of this part.

*CPL* means correction for the effect of pressure on a liquid.

*CTL* means correction for the effect of temperature on a liquid.

*NIST* means National Institute of Standards and Technology.

*PA* has the meaning set forth in § 3170.10 of this part.

*PMT* means Production Measurement Team.

*PSIA* means pounds per square inch, absolute.

*S&W* means sediment and water.

**§ 3174.20 General requirements.**

(a) Measurement of all oil at an FMP must comply with the standards prescribed in this subpart.

(b) Oil may be stored only in tanks that meet the requirements of § 3174.80.

(c) An operator must obtain a BLM-approved FMP number under §§ 3173.60 and 3173.61 of this part for each oil measurement facility where the measurement affects the calculation of the volume or quality of production on which royalty is owed (*i.e.,* oil tank used for tank gauging, LACT system, CMS, or other approved metering device), except as provided in paragraph (d) of this section.

(d) Meters used for allocation under a commingling and allocation approval under § 3173.70 are not required to meet the requirements of this subpart.

**§ 3174.30 Incorporation by reference (IBR).**

(a) Certain material is incorporated by reference into this part with the approval of the Director of the Federal Register under 5 U.S.C. 552(a) and 1 CFR part 51. To enforce any edition other than that specified in this section, the BLM must publish a rule in the **Federal Register**, and the material must be reasonably available to the public. All approved material is available for inspection at the Bureau of Land Management, Division of Fluid Minerals, 20 M Street SE, Washington, DC 20003, 202–912–7162; at all BLM offices with jurisdiction over oil and gas activities; and is available from the sources listed as follows. It is also available for inspection at the National Archives and Records Administration (NARA). For information on the availability of this material at NARA, email *fedreg.legal@nara.gov* or go to *www.archives.gov/federal-register/cfr/ibr-locations.html.*

(b) American Petroleum Institute (API), 1220 L Street NW, Washington, DC 20005; telephone 202–682–8000; API also offers free, read-only access to all of the material at *http://publications.api.org.*

(1) API Manual of Petroleum Measurement Standards (MPMS) Chapter 2—Tank Calibration, Section 2A, Measurement and Calibration of Upright Cylindrical Tanks by the Manual Tank Strapping Method; First Edition, February 1995; Reaffirmed, February 2012; Reaffirmed, August 2017 (''API 2.2A''), IBR approved for § 3174.82(a).

(2) API MPMS Chapter 2—Tank Calibration, Section 2B, Calibration of Upright Cylindrical Tanks Using the Optical Reference Line Method; First Edition, March 1989; Reaffirmed, January 2013 (''API 2.2B''), IBR approved for § 3174.82(a).

(3) API MPMS Chapter 2—Tank Calibration, Section 2C—Calibration of Upright Cylindrical Tanks Using the Optical-triangulation Method; First Edition, January 2002; Reaffirmed, April 2013 (''API 2.2C''), IBR approved for § 3174.82(a).

(4) API MPMS Chapter 3.1A, Standard Practice for the Manual Gauging of Petroleum and Petroleum Products; Third Edition, August 2013; Reaffirmed, December 2018 (''API 3.1A''), IBR approved for §§ 3174.80(f), 3174.88(a).

(5) API MPMS Chapter 3—Tank Gauging, Section 1B—Standard Practice for Level Measurement of Liquid Hydrocarbons in Stationary Tanks by Automatic Tank Gauging; Third Edition, April 2018 (''API 3.1B''), IBR approved for § 3174.88(b).

(6) API MPMS Chapter 3—Tank Gauging, Section 6—Measurement of Liquid Hydrocarbons by Hybrid Tank Measurement Systems; First Edition, February 2001; Errata, September 2005; Reaffirmed, January 2017 (''API 3.6''), IBR approved for § 3174.88(b).

(7) API MPMS Chapter 4—Proving Systems, Section 1—Introduction; Third Edition, February 2005; Reaffirmed June 2014 (''API 4.1''), IBR approved for § 3174.152.

(8) API MPMS Chapter 4—Proving Systems, Section 2—Displacement Provers; Third Edition, September 2003; Reaffirmed, March 2011; Addendum, February 2015 (''API 4.2''), IBR approved for §§ 3174.151(b), (d), and (e), 3174.152(b).

(9) API MPMS Chapter 4.5, Master-Meter Provers; Fourth Edition, June 2016 (''API 4.5''), IBR approved for § 3174.151(a).

(10) API MPMS Chapter 4—Proving Systems, Section 6—Pulse Interpolation; Second Edition, May 1999; Errata, April 2007; Reaffirmed, October 2013 (''API 4.6''), IBR approved for § 3174.152(b).

(11) API MPMS Chapter 4.8, Operation of Proving Systems; Second Edition, September 2013 (''API 4.8''), IBR approved for §§ 3174.151(a) and (b), 3174.152(c).

(12) API MPMS Chapter 4—Proving Systems, Section 9—Methods of Calibration for Displacement and Volumetric Tank Provers, Part 2—Determination of the Volume of Displacement and Tank Provers by the Waterdraw Method of Calibration; First Edition, December 2005; Reaffirmed, July 2015 (''API 4.9.2''), IBR approved for § 3174.151(b).

(13) API MPMS Chapter 5—Metering, Section 6—Measurement of Liquid Hydrocarbons by Coriolis Meters; First Edition, October 2002; Reaffirmed, November 2013 (''API 5.6''), IBR approved for §§ 3174.130(e), 3174.157.

(14) API MPMS Chapter 7.1, Temperature Determination—Liquid-in-Glass Thermometers; Second Edition, August 2017 (''API 7.1''), IBR approved for § 3174.86 introductory paragraph and (b).

(15) API MPMS Chapter 7—Temperature Determination, Section 2—Portable Electronic Thermometers; Third Edition, May 2018 (''API 7.2''), IBR approved for § 3174.86 introductory paragraph.

(16) API MPMS Chapter 7—Temperature Determination, Section 4—Dynamic Temperature Measurement; Second Edition, January 2018 (''API 7.4''), IBR approved for § 3174.105(c).

(17) API MPMS Chapter 8.1, Standard Practice for Manual Sampling of Petroleum and Petroleum Products;

Fourth Edition, October 2013 (''API 8.1''), IBR approved for §§ 3174.84, 3174.157.

(18) API MPMS Chapter 8.2, Standard Practice for Automatic Sampling of Petroleum and Petroleum Products; Fourth Edition, November 2016 (''API 8.2''), IBR approved for §§ 3174.102, 3174.157.

(19) API MPMS Chapter 8—Sampling, Section 3—Standard Practice for Mixing and Handling of Liquid Samples of Petroleum and Petroleum Products; First Edition, October 1995; Errata, March 1996; Reaffirmed, March 2015 (''API 8.3''), IBR approved for §§ 3174.102, 3174.157.

(20) API MPMS Chapter 9.1, Standard Test Method for Density, Relative Density, or API Gravity of Crude Petroleum and Liquid Petroleum Products by Hydrometer Method; Third Edition, December 2012; Reaffirmed, May 2017 (''API 9.1''), IBR approved for § 3174.87.

(21) API MPMS Chapter 9.2, Standard Test Method for Density or Relative Density of Light Hydrocarbons by Pressure Hydrometer; Third Edition, December 2012; Reaffirmed, May 2017 (''API 9.2''), IBR approved for § 3174.87.

(22) API MPMS Chapter 9.3, Standard Test Method for Density, Relative Density, and API Gravity of Crude Petroleum and Liquid Petroleum Products by Thermohydrometer Method; Third Edition, December 2012; Reaffirmed, May 2017 (''API 9.3''), IBR approved for § 3174.87.

(23) API MPMS Chapter 10.4, Determination of Water and/or Sediment in Crude Oil by the Centrifuge Method (Field Procedure); Fourth Edition, October 2013; Errata, March 2015 (''API 10.4''), IBR approved for § 3174.85.

(24) API MPMS Chapter 11—Physical Properties Data, Section 1—Temperature and Pressure Volume Correction Factors for Generalized Crude Oils, Refined Products and Lubricating Oils; May 2004, Addendum 1, September 2007; Reaffirmed, August 2012 (''API 11.1''), IBR approved for §§ 3174.90(g), (h), and (i), 3174.120(d), 3174.121(c), 3174.130(f) and (g), 3174.161(b), 3174.162(a).

(25) API MPMS Chapter 12.1.1, Calculation of Static Petroleum Quantities—Upright Cylindrical Tanks and Marine Vessels; Fourth Edition, February 2019 (API 12.1.1), IBR approved for § 3174.161(b).

(26) API MPMS Chapter 12—Calculation of Petroleum Quantities, Section 2—Calculation of Petroleum Quantities Using Dynamic Measurement Methods and Volumetric Correction Factors, Part 2—Measurement Tickets; Third Edition, June 2003; Reaffirmed, February 2016 (''API 12.2.2''), IBR approved for §§ 3174.90(i), 3174.121(c), 3174.130(g), 3174.162(a).

(27) API MPMS Chapter 12—Calculation of Petroleum Quantities, Section 2—Calculation of Petroleum Quantities Using Dynamic Measurement Methods and Volumetric Correction Factors, Part 3—Proving Report; First Edition, October 1998; Reaffirmed, May 2014 (''API 12.2.3''), IBR approved for §§ 3174.105(d), 3174.106(b), 3174.152(c) and (e), 3174.158 introductory paragraph and (a).

(28) API MPMS Chapter 12—Calculation of Petroleum Quantities, Section 2—Calculation of Petroleum Quantities Using Dynamic Measurement Methods and Volumetric Correction Factors, Part 4—Calculation of Base Prover Volumes by the Waterdraw Method; First Edition, December, 1997; Errata, July 2009; Reaffirmed, September 2014 (''API 12.2.4''), IBR approved for § 3174.151(c).

(29) API MPMS Chapter 13. 3, Measurement Uncertainty; Second Edition, December 2017 (''API 13.3''), IBR approved for § 3174.31(a).

(30) API MPMS Chapter 14, Section 3, Orifice Metering of Natural Gas and Other Related Hydrocarbon Fluids—Concentric, Square-edged Orifice Meters, Part 1: General Equations and Uncertainty Guidelines; Fourth Edition, September 2012; Errata, July 2013; Reaffirmed, September 2017 (''API 14.3.1''), IBR approved for § 3174.31(a).

(31) API MPMS Chapter 18—Custody Transfer, Section 1—Measurement Procedures for Crude Oil Gathered From Lease Tanks by Truck; Third Edition, May 2018 (''API 18.1''), IBR approved for §§ 3174.83(b), 3174.88(a).

(32) API MPMS Chapter 21—Flow Measurement Using Electronic Metering Systems, Section 2—Electronic Liquid Volume Measurement Using Positive Displacement and Turbine Meters; First Edition, June 1998; Reaffirmed, October 2016 (''API 21.2''), IBR approved for §§ 3174.90(h), 3174.105(e), 3174.106(c), 3174.120(e), 3174.130(f), 3174.162(b).

(33) API Recommended Practice (RP) 12R1, Setting, Maintenance, Inspection, Operation and Repair of Tanks in Production Service; Fifth Edition, August 1997; Reaffirmed, April 2008; Addendum 1, December 2017 (''API RP 12R1''), IBR approved for § 3174.80(a).

(34) API RP 2556, Correction Gauge Tables for Incrustation; Second Edition, August 1993; Reaffirmed, November 2013 (''API RP 2556''), IBR approved for § 3174.82(a).

**Note 1 to paragraph (b):** You may also be able to purchase these standards from the following resellers: Techstreet, 3916 Ranchero Drive, Ann Arbor, MI 48108; telephone 734–780–8000; *www.techstreet.com/api/apigate.html;* IHS Inc., 321 Inverness Drive South, Englewood, CO 80112; 303–790–0600; *www.ihs.com;* SAI Global, 610 Winters Avenue, Paramus, NJ 07652; telephone 201–986–1131; *http://infostore.saiglobal.com/store/.*

**§ 3174.31 Specific measurement performance requirements.**

(a) *Volume measurement uncertainty levels.* (1) The FMP must achieve the following overall uncertainty levels as calculated in accordance with statistical methodologies in API 13.3, and the quadrature sum (square root of the sum of the squares) method described in API 14.3.1, Subsection 12.3 (both incorporated by reference, see § 3174.30):

TABLE 1 TO § 3174.31(a)(1): VOLUME MEASUREMENT UNCERTAINTY LEVELS

| FMP category | If the averaging period volume (see definition 43 CFR 3170.3) is: | The overall volume measurement uncertainty must be within: |
|---|---|---|
| Very-high-volume | 1. Greater than or equal to 15,000 bbl/month | ±0.50 percent |
| High-volume | 2. Greater than 1,500 but less than 15,000 bbl/month | ±1.50 percent |
| Low-volume | 3. Less than or equal to 1,500 bbl/month | N/A |

(2) A BLM State Director may grant an exception to the uncertainty levels prescribed in paragraph (a)(1) of this section, but only upon:

(i) A showing that meeting the required uncertainly level would involve extraordinary cost or

unacceptable adverse environmental impacts; and

(ii) Written concurrence of the PMT, prepared in coordination with the BLM Director or his or her delegate.

(b) *Bias.* The measuring equipment used for volume determinations must achieve measurement without statistically significant bias.

(c) *Verifiability.* All FMP equipment must be susceptible to independent verification by the BLM of the accuracy and validity of all inputs, factors, and equations that are used to determine quantity or quality. Verifiability includes the ability to independently recalculate volume and quality based on source records.

**§ 3174.40 Approved measurement equipment and data requirements.**

Sections 3174.41 through 3174.43 list the following:

(a) Equipment that requires BLM approval before operators may use it at an FMP;

(b) Approved equipment that operators may use at an FMP if that equipment meets the requirements of this subpart; and

(c) Information that this subpart requires operators to submit to the BLM.

**§ 3174.41 Measurement equipment requiring BLM approval.**

Except as provided in § 3174.50, the following equipment requires BLM approval prior to use, and must appear on the list of PMT-reviewed and BLM-approved equipment maintained at *www.blm.gov.* BLM approval will be based upon a showing that the equipment meets or exceeds the performance requirements of § 3174.31. To obtain approval, the applicant must submit an application to the PMT. Recommended testing procedures will be listed at *www.blm.gov.*

(a) Automatic tank gauge (ATG) (see § 3174.88(b)(1));

(b) LACT sampling systems (see § 3174.102);

(c) Positive displacement meters (see § 3174.104);

(d) Coriolis meters (see § 3174.104 and § 3174.110(a));

(e) Coriolis transmitters (see § 3174.104 and § 3174.110(b));

(f) Stand-alone temperature averaging devices (see § 3174.105(a));

(g) Temperature transducers (see § 3174.105(b));

(h) Pressure transducers (see § 3174.106(a));

(i) Flow computers and installed particular software versions (see § 3174.120(a));

(j) Portable electronic thermometers (see § 3174.86(c));

(k) Measurement data systems (see § 3174.121(a)); and

(l) Temporary measurement (see § 3174.140).

**§ 3174.42 Approved measurement equipment.**

The following equipment is approved for use if it meets the requirements specified in this subpart:

(a) Centrifuge tubes (see § 3174.85);

(b) Liquid-in-glass thermometers (see § 3174.86);

(c) Hydrometers and thermohydrometers (see § 3174.87); and

(d) Manual gauging tapes (see § 3174.88(a)).

**§ 3174.43 Data submission and notification requirements.**

(a) Operators must submit the following information to the BLM using a Sundry Notice:

(1) Notification to the AO of the date an FMP begins voluntary early compliance with this subpart (see § 3174.60(b)(3));

(2) FMP tank calibration charts (tank tables) (see § 3174.82(d));

(3) Notification after repair of any LACT system failures or equipment malfunctions that may have resulted in measurement error (see § 3174.90(e)(1));

(4) Justification for excessive meter factor deviation (see § 3174.154(a));

(5) Prior AO approval to sell or dispose of slop oil (see § 3174.180(c)); and

(6) Notification of the volume of slop oil sold or disposed of and the method used to compute the volume (see § 3174.180(c)).

(b) Operators must submit the following information to the BLM upon request of the AO:

(1) ATG Field verification log (see § 3174.88(b)(4));

(2) Coriolis meter zero value verification procedure (see § 3174.110(e));

(3) Log of all meter factors, zero verifications, and zero adjustments (see § 3174.110(e));

(4) ELM Audit trail data including QTR, configuration log, event log, and alarm log (see § 3174.120(d));

(5) Meter proving report (see § 3174.158(c)); and

(6) Measurement tickets (see § 3174.160).

**§ 3174.50 Grandfathering.**

(a) The equipment listed in § 3174.41(a) through (i) and installed or used at a high- or low-volume FMP prior to [EFFECTIVE DATE OF FINAL RULE] is exempt from the approval requirements in § 3174.41.

(b) For any high- or low-volume FMP, if any of the equipment listed in § 3174.41(a) through (i) is replaced after [EFFECTIVE DATE OF FINAL RULE], it is no longer exempt from the approval requirement in § 3174.41.

(c) Any high- or low-volume FMP that changes category and becomes a very-high-volume FMP is no longer exempt from the approval requirements in § 3174.41.

(d) Portable electronic thermometers, measurement data systems, and temporary measurement are not subject to the exemption provided for in paragraph (a) and must be approved by the BLM prior to use.

**§ 3174.60 Timeframes for compliance.**

(a) All equipment used to measure the volume and quality of oil for royalty purposes at an FMP installed after January 17, 2017, must comply with the requirements of this subpart starting [EFFECTIVE DATE OF FINAL RULE].

(b) All equipment and measuring procedures used to measure the volume and quality of oil for royalty purposes that were in use before January 17, 2017, must comply with the requirements of this subpart as follows:

(1) Very-high-volume FMPs must comply starting [DATE ONE YEAR AFTER EFFECTIVE DATE OF FINAL RULE];

(2) High-volume and low-volume FMPs must comply starting [DATE TWO YEARS AFTER EFFECTIVE DATE OF FINAL RULE]; or

(3) An operator may voluntarily begin full compliance with the requirements of this subpart at any FMP prior to the mandatory compliance dates specified in paragraphs (b)(1) and (2) of this section. The operator must notify the AO within 30 days by Sundry Notice of the date the FMP began early compliance.

(c) Prior to the compliance time frames identified in paragraph (b) of this section, measurement procedures and equipment used to measure oil for royalty purposes that were in use prior to January 17, 2017, must continue to comply with the requirements of Onshore Oil and Gas Order No. 4, Measurement of Oil, and any COAs, written orders, and variances applicable to that equipment.

(d) All requirements and standards related to measurement of oil established by Onshore Oil and Gas Order No. 4, Measurement of Oil, and any COAs, written orders, and variances based on Onshore Oil and Gas Order No. 4 are rescinded as of the compliance time frames identified in paragraph (b) of this section.

(e) Equipment approvals under § 3174.41 will be required after [DATE

TWO YEARS AFTER EFFECTIVE DATE OF FINAL RULE].

**§ 3174.70 Measurement location.**

(a) *Commingling and allocation.* Oil produced from a lease, unit PA, or CA may not be commingled with production from other leases, unit PAs, or CAs or non-Federal properties before the point of royalty measurement, unless prior approval is obtained under §§ 3173.70 and 3173.71 of this part.

(b) *Off-lease measurement.* Oil must be measured on the lease, unit PA, or CA, unless approval for off-lease measurement is obtained under §§ 3173.90 and 3173.91 of this part.

**§ 3174.80 Oil storage tank equipment.**

(a) Each tank used for oil storage must comply with the recommended practices listed in API RP 12R1, Subsection 4 (incorporated by reference, see § 3174.30).

(b) Each oil storage tank must be connected, maintained, and operated in compliance with §§ 3173.20, 3173.31, and 3173.32 of this part.

(c) All oil storage tanks, hatches, connections, and other access points must be vapor tight. Unless connected to a vapor recovery or flare system, all tanks must have a pressure-vacuum relief valve installed at the highest point in the vent line or connection with another tank. All hatches, connections, and other access points must be installed and maintained in accordance with manufacturers' specifications.

(d) All oil storage tanks must be clearly identified and have an operator-generated number unique to the lease, unit PA, or CA, stenciled on the tank and maintained in a legible condition.

(e) Each oil storage tank associated with an FMP that has a tank-gauging system must be set and maintained level.

(f) Each oil storage tank associated with an FMP that has a tank-gauging system must be equipped with a distinct gauging reference point consistent with the definition found in API 3.1A, Subsection 3.14 (incorporated by reference, see § 3174.30). The height of the reference point must be stamped on a fixed bench-mark plate or stenciled on the tank near the gauging hatch, and be maintained in a legible condition.

**§ 3174.81 Oil measurement by tank gauging.**

Oil measurement by tank gauging must accurately compute the total net standard volume of oil withdrawn from a properly calibrated FMP tank by following §§ 3174.82 through 3174.88 and 3174.31 to determine the quantity and quality of oil being removed.

**§ 3174.82 Oil tank calibration.**

(a) The operator must accurately calibrate each oil storage tank associated with an FMP that has a tank-gauging system using API 2.2A, API 2.2B, or API 2.2C, and API RP 2556 (all incorporated by reference, see § 3174.30).

(b) The operator must determine FMP tank capacity tables by tank calibration using actual tank measurements.

(1) The unit volume must be in barrels (bbl);

(2) The incremental height measurement must match the gauging increments specified in § 3174.87(a)(3);

(3) The tank capacity tables must be calculated for a tank shell temperature of 60 °F; and

(4) FMP tank capacity tables must be recalculated if the reference gauge point is changed.

(c) An FMP tank must be recalibrated if it is relocated or repaired, or the capacity is changed as a result of denting, damage, installation, removal of interior components, or other alterations; and

(d) FMP tank calibration charts (tank tables) must be submitted to the AO by Sundry Notice within 45 days after calibration or recalculation of charts.

**§ 3174.83 Tank-gauging procedures.**

(a) The procedures for oil measurement by tank gauging must comply with the requirements outlined in this section and §§ 3174.83 through 3174.88 to determine the quality and quantity of oil measured under field conditions at an FMP.

(b) The operator must follow the operation sequence identified in API 18.1, Subsection 6 (incorporated by reference, see § 3174.30).

(c) During field operations, operators must obtain and document the data required under § 3174.161(a).

(d) The operator must isolate the tank for at least 30 minutes to allow contents to settle before proceeding with tank gauging operations. The tank isolating valves must be closed and sealed as required under § 3173.20 of this part.

(e) After transfer is complete, the operator must close the tank valve and seal the valve as required under §§ 3173.20 and 3173.30 of this part.

**§ 3174.84 Tank oil sampling.**

Sampling operations must be conducted prior to taking the opening gauge, except where the BLM approves an automatic sampling system or alternative process. Oil sampling operations conducted on an FMP tank must yield a representative sample of the oil and its physical properties and must comply with the provisions in API 8.1 pertaining to sampling from storage tanks (incorporated by reference, see § 3174.30).

**§ 3174.85 Determining S&W content.**

Using the oil samples obtained under § 3174.84, the operator must determine the S&W content of the oil in the tank, according to API 10.4 (incorporated by reference, see § 3174.30).

**§ 3174.86 Tank oil temperature determination.**

When determining the temperature of oil contained in an FMP tank, the operator must comply with paragraphs (a) through (d) of this section, API 7.1, Subsections 6.1 through 6.2 and Subsections 7.1 through 7.1.2.2, or API 7.2, Subsections 7.1 through 7.2.2 and 7.2.5 through 7.2.9 (both incorporated by reference, see § 3174.30).

(a) For tanks less than 5,000 bbl nominal capacity, a single temperature measurement at the middle of the liquid may be used.

(b) Glass thermometers must be clean, be free of fluid separation, have a minimum graduation of 1.0 °F, and have an accuracy of ±0.5 °F. Refer to API 7.1, Subsection 6.1.1.3 (incorporated by reference, see § 3174.30) for allowable American Society for Testing and Materials (ASTM) tank thermometers meeting these requirements.

(c) Electronic thermometers must have a minimum graduation of 0.1 °F and have an accuracy of ±0.5 °F. The specific makes and models of electronic thermometers identified and described at *www.blm.gov* are approved for use. If an electronic thermometer is used, a flow-weighted average can be used in lieu of a single-point opening and closing temperature.

(d) Record the temperature to the nearest 1.0 °F for glass thermometers or 0.1 °F for electronic thermometers.

**§ 3174.87 Observed oil gravity determination.**

Tests for oil gravity must comply with paragraphs (a) through (c) of this section and API 9.1, API 9.2, or API 9.3 (all incorporated by reference, see § 3174.30).

(a) The hydrometer or thermohydrometer (as applicable) must be calibrated for an oil gravity range that includes the observed gravity of the oil sample being tested and must be clean, with a clearly legible oil gravity scale and with no loose shot weights.

(b) Allow the temperature to stabilize for at least 5 minutes prior to reading the thermometer.

(c) Read and record the observed API oil gravity to the nearest 0.1 degree. Read and record the temperature reading to the nearest 1.0 °F.

**§ 3174.88 Measuring tank fluid level.**

The operator must take and record the opening gauge only after samples have been taken. Gauging must comply with either paragraph (a) of this section for manual gauging, or paragraph (b) of this section for automatic tank gauging.

(a) For manual innage gauging, the operator must comply with the requirements of API 3.1A, Subsections 4.1 through 4.2.2.3 and 5.1 through 5.4, and API 18.1, Subsection 6.8 (both incorporated by reference, see § 3174.30) and the following:

(1) A proper innage-gauging bob must be used;

(2) A gauging tape must be used. The gauging tape must be made of steel or corrosion-resistant material with graduation clearly legible, and must not be kinked or spliced;

(3) The operator must either obtain two consecutive identical gauging measurements for any tank regardless of size, or:

(i) For tanks of 1,000 bbl or less in nominal capacity, obtain three consecutive measurements that are within 1/4 inch of each other and average these three measurements to the nearest 1/4 inch; or

(ii) For tanks greater than 1,000 bbl in nominal capacity, obtain three consecutive measurements within 1/8 inch of each other, averaging these three measurements to the nearest 1/8 inch.

(4) A suitable product-indicating paste may be used on the tape to facilitate the reading. The use of chalk or talcum powder is prohibited.

(b) For automatic tank gauging (ATG), comply with the requirements of API 3.1B, and API 3.6, Subsection 6.2, (both incorporated by reference, see § 3174.30) and the following:

(1) The specific makes and models of ATG that are identified and described at *www.blm.gov* are approved for use;

(2) The ATG must be installed per the requirements of API 3.1B, Subsections 5, 6, and 7 (incorporated by reference, see § 3174.30), the manufacturer's recommendations, and any COAs from the BLM equipment approval;

(3) The ATG must be inspected and its accuracy verified to within ±1/4 inch in for tanks of 1,000 bbl or less in nominal capacity or within ±1/8 inch for tanks greater than 1,000 bbl in nominal capacity in accordance with procedures outlined in API 3.1B, Subsection 9 (incorporated by reference, see § 3174.30) prior to FMP measurement, but no more frequently than monthly, or any time at the request of the AO. If the ATG is found to be out of the manufacturer's tolerance, the ATG must be calibrated prior to FMP measurement;

(4) A detailed log of field verifications must be maintained and available upon request. The log must be in compliance with § 3170.50(g) of this part and include the following information: The date of verification; the as-found manual gauge readings; the as-found ATG readings; and whether the ATG was field calibrated. If the ATG was field calibrated, the as-left manual gauge readings and as-left ATG readings must be recorded; and

(5) The date of last ATG field verification must be maintained at the FMP in legible condition, in compliance with § 3170.50(g) of this part, and accessible to the AO at all times.

**§ 3174.90 LACT system—general requirements.**

(a) A LACT system must meet the construction and operation requirements and minimum standards of this section and §§ 3174.31 and 3174.100.

(b) A LACT system must be proven as prescribed in § 3174.150.

(c) All components of a LACT system must be accessible for inspection by the AO.

(d) Automatic temperature compensators and automatic temperature and gravity compensators are prohibited and are not grandfathered equipment under § 3174.50.

(e) The operator must notify the AO by Sundry Notice within 30 days after repair of any LACT system failures or equipment malfunctions that may have resulted in measurement error. Such system failures or equipment malfunctions include, but are not limited to, electrical, meter, and other failures that affect oil measurement.

(f) Any tests conducted on oil samples extracted from LACT system samplers for determination of S&W content and observed oil gravity must meet the requirements and minimum standards in §§ 3174.85 and 3174.87.

(g) The average temperature for the measurement ticket must be calculated for the measurement period covered under the measurement ticket and must be the temperature used to calculate the CTL correction factor using API 11.1 (incorporated by reference, see § 3174.30).

(h) The pressure for the measurement ticket must be determined by:

(1) A direct reading of the installed pressure gauge; or,

(2) If the LACT is equipped with an ELM system or an automatic adjusting back-pressure control, then the system must utilize a pressure transducer. If using a pressure transducer, the average pressure must be calculated beginning when the measurement ticket was opened. The average pressure must be calculated by the volumetric averaging method using API 21.2, Subsection 9.2.13.2a (incorporated by reference, see § 3174.30) and must be used to calculate the CPL correction factor using API 11.1. (incorporated by reference, see § 3174.30).

(i) Calculate the net standard volume of each measurement ticket following API 11.1 and API 12.2.2, Subsections 9, 10, and 11 (incorporated by reference, see § 3174.30) or any other BLM-approved methods.

(j) Measurement tickets must be completed under § 3174.162.

**§ 3174.100 LACT system—components and operating requirements.**

Unless otherwise approved, each LACT system must include all of the equipment listed in §§ 3174.101 through 3174.108 and LACT operation must meet the requirements of §§ 3174.101 through 3174.108.

**§ 3174.101 Charging pump and motor.**

Where the static head is insufficient to provide a net positive suction head for desired fluid pressure and flowrates, the LACT system must include an electrically-driven charge pump that has a discharge pressure rate compatible with the meter used and is sized to assure turbulent flow in the LACT main stream piping.

**§ 3174.102 Sampling and mixing system.**

Sampling and mixing systems that are identified and described at *www.blm.gov* are approved for use. Sampling and mixing must be conducted in accordance with API 8.2 and API 8.3 (both incorporated by reference, see § 3174.30) and the following:

(a) The sample extractor probe must:

(1) Be inserted within the center half of the flowing stream;

(2) Be horizontally oriented; and

(3) Have external markings that show the orientation of the probe in relation to fluid flow direction.

(b) Sampling frequency must be proportioned to the flow rate through the meter and must be based on maximizing the number of grabs for the composite-sample container for the measurement period;

(c) The composite-sample container must be capable of holding the sample under pressure, must be equipped with a vapor-proof top closure, and must be operated to prevent the unnecessary escape of vapor. The composite sample container must be emptied and cleaned upon completion of sample withdrawal and when closing a run ticket; and

(d) The mixing system must completely blend the sample (inside the

composite sample container) into a homogeneous mixture before and during the withdrawal of a portion of the sample for testing.

**§ 3174.103 Air eliminator.**

An air eliminator must be installed to prevent air or gas from entering the meter. The air eliminator may be integrated with an optional strainer.

**§ 3174.104 LACT meter.**

The LACT meter must be a positive displacement meter, a Coriolis meter (see § 3174.110), or other meter approved by the BLM. The specific make, models, and sizes of positive displacement, Coriolis meter, Coriolis transmitter, or other approved meters that are identified and described at *www.blm.gov* are approved for use.

(a) The LACT meter must be equipped with a non-resettable totalizer. The non-resettable totalizer display may reside in an electronic flow computer.

(b) The LACT meter must include or allow for the attachment of a device that generates at least 8,400 pulses per barrel of registered volume.

**§ 3174.105 Electronic temperature averaging device.**

The electronic temperature averaging device may be a stand-alone device or a function of a flow computer and must be installed, operated, and maintained as follows:

(a) The specific makes and models of stand-alone electronic temperature averaging devices that are identified and described at *www.blm.gov* are approved for use.

(b) The specific makes and models of temperature transducers that are identified and described at *www.blm.gov* are approved for use.

(c) The temperature thermowell and transducer must be installed no further than 5 pipe diameters downstream from the meter, in compliance with API 7.4, Subsections 6.3 and 7.2 (incorporated by reference, see § 3174.30);

(d) The temperature averaging device must have a reference accuracy of ±0.5 °F or better, and have a minimum display discrimination level in accordance with API 12.2.3, Subsection 11.2, table 3 (incorporated by reference, see § 3174.30);

(e) The electronic temperature averaging device must be volume-weighted and take a temperature reading following API 21.2, Subsection 9.2.8 (incorporated by reference, see § 3174.30); and

(f) The temperature averaging device must include a display of instantaneous temperature and the average temperature calculated since the measurement ticket was opened. The display may be a function of an electronic flow computer.

**§ 3174.106 Pressure-indicating device.**

The pressure-indicating device may be either a pressure gauge or pressure transducer and must be installed, operated, and maintained as follows:

(a) The system must have a pressure-indicating device located downstream of the meter, but on the upstream side of the first valve of the prover connection. The pressure-indicating device must be capable of providing pressure data to calculate the CPL correction factor. The specific makes and models of pressure transducers that are identified and described at *www.blm.gov* are approved for use.

(b) The pressure-indicating device must have a minimum display discrimination level in accordance with API 12.2.3, Subsection 11.2, table 4 (incorporated by reference, see § 3174.30); and

(c) If a pressure transducer is used, it must be used in conjunction with an electronic pressure-averaging device. A pressure-averaging device may be a function of a flow computer:

(1) The electronic pressure averaging device must include a display of instantaneous pressure and the average pressure calculated since the measurement ticket was opened. The display may be a function of an electronic flow computer; and

(2) The electronic pressure averaging device must be volume-weighted and take a pressure reading in accordance with API 21.2, Subsection 9.2.8 (incorporated by reference, see § 3174.30).

**§ 3174.107 Meter-proving connections.**

All meter-proving connections must be installed downstream from the LACT meter and upstream of back-pressure control. The line valve(s) must be installed between the inlet and outlet of the prover loop and must be configured with a double block and bleed design feature to provide for leak testing during proving operations. All valves must be full opening valves.

**§ 3174.108 Back-pressure and check valves.**

The back-pressure and check valves must be installed downstream from the meter-proving connections. Back pressure must be applied by either a back-pressure valve or other controllable means of applying back pressure. Back pressure may be maintained by an automatic-adjusting back-pressure control to adjust for changing flowing conditions. Back-pressure control must maintain a pressure that is above the bubble point of the liquid to prevent the formation of vapor, ensuring single phase flow.

**§ 3174.110 Coriolis meter operating requirements.**

(a) The specific makes, models, and sizes of Coriolis meters that are identified and described at *www.blm.gov* are approved for use.

(b) The specific makes and models of Coriolis transmitters that are identified and described at *www.blm.gov* are approved for use.

(c) The Coriolis meter must register the volume of oil passing through the meter as determined by a system that constantly emits electronic pulse signals representing the indicated volume measured. The pulse per unit volume must be set at a minimum of 8,400 pulses per barrel.

(d) The Coriolis meter must have a non-resettable internal totalizer for indicated volume. The non-resettable totalizer display may reside in an electronic flow computer, but must be generated from the Coriolis meter. A flow-computer-generated totalizer does not comply with the requirements of this subpart.

(e) Meter zero verification must be conducted during the proving process, or any time the AO requests it. If the indicated flow rate is within the manufacturer's specifications for zero stability, no adjustments are required. If the indicated flow rate is outside the manufacturer's specification for zero stability, the meter's zero reading must be adjusted. After the meter's zero reading has been adjusted, the meter must be proven as required by § 3174.150. A copy of the zero value verification procedure must be made available to the AO upon request. A log must be maintained of all meter factors, zero verifications, and zero adjustments. For zero adjustments, the log must include the zero value before adjustment and the zero value after adjustment. The log must be made available to the AO upon request.

(f) The required on-site information may be displayed on a Coriolis meter display or may reside in an electronic flow computer. The display must provide the following information:

(1) The display must be readable without using data-collection units, laptop computers, or any special equipment, and must be on-site and accessible to the AO;

(2) For each Coriolis meter, the following values and corresponding units of measurement must be displayed on the device or the ELM display:

(i) The instantaneous density of liquid (pounds/bbl, pounds/gal, or degrees API);

(ii) The instantaneous indicated volumetric flow rate through the meter (bbl/day);

(iii) The meter factor;

(iv) The cumulative indicated volume through the meter (non-resettable totalizer) (bbl); and

(v) The previous day's indicated volume through the meter (bbl).

**§ 3174.120 Electronic liquids measurement system, ELM (secondary and tertiary device).**

Any FMP with an ELM installed must comply with the requirements of this section. An ELM is required on all very-high-volume FMPs, and all CMS regardless of FMP category.

(a) The specific makes and models of flow computers and software versions that are identified and described at *www.blm.gov* are approved for use.

(b) For each ELM, the following values and corresponding units of measurement must be displayed:

(1) The instantaneous density of liquid (pounds/bbl, pounds/gal, or degrees API);

(2) The instantaneous indicated volumetric flow rate through the meter (bbl/day);

(3) The meter factor;

(4) The instantaneous pressure (psi);

(5) The instantaneous temperature (°F);

(6) The average temperature calculated since the measurement ticket was opened;

(7) The cumulative indicated volume through the meter (non-resettable totalizer) (bbl); and

(8) The previous day's indicated volume through the meter (bbl).

(c) The following information must be correct, must be maintained in a legible condition, and must be accessible to the AO at the FMP without the use of data-collection equipment, laptop computers, or any special equipment:

(1) The make, model, and size of each sensor; and

(2) The make, model, range, and calibrated span of the pressure and temperature transducer used to determine gross standard volume.

(d) Calculated volumetric output of the ELM must incorporate the meter factor and correct for CTL and CPL in accordance with API 11.1 (incorporated by reference, see § 3174.30).

(e) The information specified in paragraphs (e)(1) through (4) of this section must be recorded and retained under the recordkeeping requirements of § 3170.50(g) of this part. The audit trail must comply with API 21.2, Subsection 10 (incorporated by reference, see § 3174.30). All data must be available and submitted to the BLM upon request.

(1) Quantity transaction record (QTR): Retention of QTR data must be on a daily (24-hour) basis, except in circumstances where batch delivery duration is less than 24 hours. In these situations, hourly data retention is required. The QTR must follow the requirements for a measurement ticket in § 3174.162.

(2) Configuration log: The configuration log must comply with the requirements of API 21.2, Subsection 10.2 (incorporated by reference, see § 3174.30). The configuration log must contain and identify all constant flow parameters used in generating the QTR.

(3) Event log: The event log must comply with the requirements of API 21.2, Subsection 10.6 (incorporated by reference, see § 3174.30). In addition, the event log must be of sufficient capacity to record all events such that the operator can retain the information under the recordkeeping requirements of § 3170.50(g) of this part.

(4) Alarm log: The type and duration of any of the following alarm conditions must be recorded:

(i) Deviations from acceptable density parameters for Coriolis flow meters;

(ii) Instances in which the flow rate exceeded the manufacturer's maximum recommended flow rate or was below the manufacturer's minimum recommended flow rate;

(iii) Instances in which the temperature of the fluid exceeded the calibrated span of the temperature transmitter;

(iv) Instances in which the pressure of the fluid exceeded the calibrated span of the pressure transmitter;

(v) Any power loss to the meter or instance in which the ELM no longer detects the meter output; and

(vi) Instances in which any other meter output exceeds its user-defined span of operation.

(5) The alarm log may be part of the event log and fulfill the requirements of this subpart, as long as protections are in place to ensure that excessive alarming will not affect the event log's compliance with the record-keeping requirements of this subpart.

(f) Each ELM must have installed and maintained in an operable condition a backup power supply or a nonvolatile memory capable of retaining all required raw data in the unit's memory for at least 35 days to ensure that the audit-trail information required under paragraph (e) of this section is protected.

**§ 3174.121 Measurement data system (MDS).**

(a) The specific MDS that are identified (by name and version) and described at *www.blm.gov* are approved for use. MDS are not grandfathered under § 3174.50.

(b) The MDS must comply with the recordkeeping requirements of § 3170.50(g) of this part.

(c) The MDS must calculate net standard volume in accordance with API 11.1 and API 12.2.2, Subsections 9, 10 and 11 (both incorporated by reference, see § 3174.30) or other methods approved by the BLM.

(d) The MDS must maintain and preserve the raw data from the primary and secondary elements of the system as well as clearly show edits and corrections made by the user.

**§ 3174.130 Coriolis measurement systems (CMS)—general requirements and components.**

This section applies to Coriolis measurement applications independent of LACT measurement systems.

(a) A CMS must meet the requirements and minimum standards of this section and §§ 3174.31 and 3174.110.

(b) A CMS must be equipped with an ELM system meeting the requirements of § 3174.120.

(c) A CMS system must be proven in compliance with § 3174.150.

(d) CMS measurement tickets must be completed under § 3174.162.

(e) A CMS at an FMP must be installed with the components listed in API 5.6, Subsection 6.3 (incorporated by reference, see § 3174.30). Additional requirements are as follows:

(1) The pressure transducer must meet the requirements of § 3174.106(a), (b), and (c);

(2) Temperature determinations must meet the requirements of § 3174.105(b) and (c);

(3) If nonzero S&W content is to be used in determining net oil volume, the sampling system must meet the requirements of § 3174.102 and any tests conducted on oil samples for determination of S&W content must meet the requirements of § 3174.85. If no sampling system is used, or the sampling system does not meet the requirements of § 3174.102, the S&W content must be reported as zero;

(4) Sufficient back pressure must be applied to ensure single-phase flow through the meter; and

(5) Block valves must be present at both ends of the system to allow for a zero-flow verification.

(f) The API oil gravity reported for the measurement-ticket period must be

determined by one of the following methods:

(1) Determined from a composite sample taken pursuant to § 3174.87; or,

(2) Calculated from the average density as measured by the CMS over the measurement-ticket period under API 21.2, Subsection 9.2.13.2a (incorporated by reference, see § 3174.30). Density must be corrected to base temperature and pressure using API 11.1 (incorporated by reference, see § 3174.30).

(g) Calculate the net standard volume at the close of each measurement ticket following the guidelines in API 11.1 and API 12.2.2, Subsections 9, 10 and 11 (both incorporated by reference, see § 3174.30) or any method approved by the BLM identified and described at *www.blm.gov.*

(h) If the CMS is mounted on a truck or trailer that travels between locations, referred to as a Truck-Mounted Coriolis (TMC), the unit must meet all requirements of the CMS, subject to the following special considerations:

(1) The TMC is required to meet the performance requirements of a very-high-volume FMP;

(2) The meter factor used during the truck load at an FMP must be derived from a prove that is within the defined ''normal operating conditions'' of § 3174.150 for that location;

(3) The display and on-site information requirements of the CMS only apply when the TMC is at that location;

(4) The proving frequency will be based on the total volume passing through the TMC meter, not the volume at any specific location, and will include non-Federal or non-tribal volumes that may have passed through the meter;

(5) The notification requirements of the proving must be followed, including the ability for a BLM representative to witness the prove, even if the proving is not carried out on a BLM location;

(6) The operator must make available, at the request of an AO, data for non-Federal and non-tribal transfers, in which the TMC was used so that a full audit can be conducted (such data may be de-identified);

(7) The sales line between the TMC and the sales valve at the FMP must be connected before the seal is broken on the valve;

(8) The seal on the sales valve must be replaced at the end of each truck load using a TMC (multi-truck loads without seal replacement are prohibited);

(9) The operator must show the TMC will be able to comply with the audit trail requirements of § 3173; and

(10) Any variations from these requirements are considered alternative methods of measurement and will require PMT review and BLM approval.

**§ 3174.140 Temporary measurement.**

Measurement equipment at any temporary measurement facility must meet the requirements of this subpart, subject to the following special considerations:

(a) Temporary measurement facilities must meet the performance requirements of very-high-volume FMPs;

(b) Any temporary measurement facility that meets the definition of LACT or CMS must be proved on the location within 72 hours of first flow through the meter. If the meter is on location for less than 72 hours, it must be proved so a meter factor can be established before it is removed from service; and

(c) Any temporary measurement facility must be identified as such and provide a unique identification number that can be tied to the location for all records.

**§ 3174.150 Meter-proving requirements.**

Sections 3174.151 through 3174.158 specify the minimum requirements for conducting volumetric meter proving for all FMP meters.

**§ 3174.151 Meter prover.**

Acceptable provers are positive-displacement master meters, Coriolis master meters, and displacement provers, or other provers approved by the BLM and identified and described at *www.blm.gov.* The operator must ensure that the meter prover used to determine the meter factor has a valid certificate of calibration on site and available for review by the AO. The certificate must show that the prover, identified by the serial number assigned to and inscribed on the prover, was calibrated as follows:

(a) Master meters must have a meter factor within 0.9900 to 1.0100 as determined by a minimum of five consecutive prover runs within 0.0005 (0.05 percent repeatability) as described in API 4.5, Subsection 6.5, Table 2 (incorporated by reference, see § 3174.30). The master meter must not be mechanically compensated for oil gravity or temperature; its readout must indicate units of volume without corrections. The meter factor must be documented on the calibration certificate and must be calibrated at least once every 12 months. New master meters must be calibrated immediately and recalibrated in 3 months. Master meters that have undergone mechanical repairs, alterations, or changes that affect the calibration must be calibrated immediately upon completion of this work and calibrated again 3 months after this date in accordance with API 4.8, Annex B.2 (incorporated by reference, see § 3174.30).

(b) Displacement provers must meet the requirements of API 4.2 (incorporated by reference, see § 3174.30) and be calibrated using the water-draw method under API 4.9.2 (incorporated by reference, see § 3174.30), at the calibration frequencies specified in API 4.8, Subsection 10.1(b) (incorporated by reference, see § 3174.30).

(c) The base prover volume of a displacement prover must be calculated in accordance with API 12.2.4 (incorporated by reference, see § 3174.30).

(d) Displacement provers must be sized to obtain a displacer velocity through the prover that is within the appropriate range during proving in accordance with API 4.2, Subsection 4.3.4.2, Minimum Displacer Velocities and Subsection 4.3.4.1, Maximum Displacer Velocities (incorporated by reference, see § 3174.30).

(e) Fluid velocity must be calculated using API 4.2, Subsection 4.3.4.3, Equation 12 (incorporated by reference, see § 3174.30).

**§ 3174.152 Meter-proving runs.**

Meter proving must follow the applicable section(s) of API 4.1, Proving Systems (incorporated by reference, see § 3174.30).

(a) Meter proving must be performed under normal operating conditions. The normal operating condition will be established by the flow rate, fluid pressure, fluid temperature, and fluid gravity, at the time of proving. These established normal operating conditions will be in effect until the next proving. Except for impacts from any routine activities, such as pipeline pigging operations or temporary interruptions not lasting more than 3 consecutive days or any 7 days total within the proving period cycle, the flow rate, fluid pressure, fluid temperature, and fluid gravity, must remain in the following ranges or the conditions for normal operating will no longer be met and a new proving is required:

(1) The oil flow rate through the LACT or CMS must remain within 10 percent of the flow rate established during the proving;

(2) The pressure as measured by the LACT or CMS must remain within 10 percent of the pressure established during the proving. Back pressure may be adjusted after prover connection,

prior to proving to establish the normal condition;

(3) The temperature as measured by the LACT or CMS must remain within 10 °F of the operating temperature established during the proving; and

(4) The gravity of the oil must remain within 5 degrees API of the oil gravity established during the proving.

(b) If each proving run is not of sufficient volume to generate at least 10,000 pulses, as specified by API 4.2, Subsection 4.3.2.1 (incorporated by reference, see § 3174.30), from the positive displacement meter or the Coriolis meter, then pulse interpolation must be used in accordance with API 4.6, Pulse Interpolation (incorporated by reference, see § 3174.30).

(c) Proving runs must be made until the calculated meter factor or meter generated pulses from five consecutive runs match within a tolerance of 0.0005 (0.05 percent) between the highest and the lowest value in accordance with API 12.2.3, Subsection 9 (incorporated by reference, see § 3174.30), or from any of the number of runs indicated in API 4.8 Table A.1 (incorporated by reference, see § 3174.30) that will result in the 0.027 percent uncertainty repeatability criteria.

(d) The new meter factor is the arithmetic average of the meter-generated pulses or intermediate meter factors calculated from the proving runs under paragraph (c) of this section.

(e) Meter factor computations must follow the sequence described in API 12.2.3, Subsection 12 (incorporated by reference, see § 3174.30).

(f) The meter factor must be at least 0.9900 and no more than 1.0100.

(g) The initial meter factor for a new or repaired meter must be at least 0.9950 and no more than 1.0050.

(h) If multiple meter factors are determined over a range of normal operating conditions, then:

(1) If all the meter factors determined over a range of conditions fall within 0.0020 of each other, then a single meter factor may be calculated for that range as the arithmetic average of all the meter factors within that range. The full range of normal operating conditions may be divided into segments such that all the meter factors within each segment fall within a range of 0.0020. In this case, a single meter factor for each segment may be calculated as the arithmetic average of the meter factors within that segment; or

(2) The metering system may apply a dynamic meter factor derived (*e.g.,* using linear interpolation, polynomial fit, etc.) from the series of meter factors determined over the range of normal operating conditions, so long as no two neighboring meter factors differ by more than 0.0020.

(i) Composite meter factors may only be used with a fixed-setting, back-pressure system. If a composite meter factor is calculated, the CPL value used must be calculated from the fluid flowing pressure at the conclusion of the proving operations, after the prover has been disconnected and all back-pressure adjustments are completed. After the prover has been disconnected and the fixed back-pressure setting has been adjusted, the back-pressure valve must be sealed under § 3173.21 of this part.

**§ 3174.153 Minimum proving frequency.**

The operator must prove any FMP meter before removal or sales of production after any of the following events:

(a) Within 15 days of the first flow after installation of the FMP;

(b) Every 3 months (quarterly) after the last proving, or each time the registered volume flowing through the meter, as measured on the non-resettable totalizer from the last proving, increases by 75,000 bbl, whichever comes first, but no more frequently than monthly;

(c) Meter zeroing (Coriolis meter);

(d) Removal and reinstallation of the meter;

(e) A change in fluid temperature that exceeds the transducer's calibrated span;

(f) A change in the flow rate, pressure, temperature, or gravity that exceeds the normal operating conditions as defined in § 3174.152(a);

(g) The mechanical or electrical components of the meter are changed, repaired, or removed;

(h) Internal calibration factors are changed or reprogrammed; and

(i) At the request of the AO.

**§ 3174.154 Excessive meter factor deviation.**

If the difference in meter factors between any two consecutive provings exceeds ±0.0025 then:

(a) The operator must submit by Sundry Notice for approval to the AO a statement explaining that the meter did not malfunction; or

(b) If the AO does not approve the explanation that the meter did not malfunction or the operator did not provide one, then the meter must be immediately removed from service, checked for damage or wear, adjusted or repaired, and re-proved before returning the meter to service. The proving report submitted under § 3174.158 must clearly describe all repairs and adjustments; and

(c) The arithmetic average of the two consecutive meter factors (the previous meter factor and the excessive meter factor) must be applied to the production measured through the meter between the date of the previous meter proving and the date of the excessive meter factor proving.

**§ 3174.155 Verification of the temperature transducer.**

As part of each required meter proving and upon replacement, the temperature transducer used in conjunction with a temperature averager for a LACT system and the temperature transducer used in conjunction with an ELM must be verified against a known standard according to the following:

(a) The temperature transducer must be compared with a test thermometer traceable to NIST and with a stated accuracy of ±0.25 °F or better;

(b) The temperature reading displayed on the temperature average display or ELM display must be compared with the reading of the test thermometer using one of the following methods:

(1) The test thermometer must be placed in a test thermometer well located not more than 12 inches from the probe of the temperature transducer; or

(2) Both the test thermometer and probe of the temperature transducer must be placed in an insulated water bath. The water bath temperature must be within 20 °F of the normal flowing temperature of the oil.

(c) The displayed reading of instantaneous temperature from the temperature average display or ELM display must be compared with the reading from the test thermometer. If they differ by more than 0.5 °F, then the difference in temperatures must be noted on the meter proving report, and:

(1) The temperature transducer must be adjusted to match the reading of the test thermometer; or

(2) The temperature transducer must be recalibrated, repaired, or replaced.

**§ 3174.156 Verification of the pressure transducer (if applicable).**

(a) As part of each required meter proving and upon replacement, the pressure transducer must be compared with a test pressure device (dead weight or pressure gauge) traceable to NIST and having a stated maximum uncertainty of no more than one-half of the accuracy required from the transducer being verified.

(b) The pressure reading displayed on the pressure transducer must be compared with the reading of the test pressure device.

(c) The pressure transducer must be tested at the following three points:

(1) Zero (atmospheric pressure);

(2) 100 percent of the calibrated span of the pressure transducer; and

(3) A point that represents the normal flowing pressure through the Coriolis meter.

(d) If the pressure applied by the test pressure device and the pressure displayed on the pressure transducer vary by more than the required accuracy of the pressure transducer, the pressure transducer must be adjusted to read within the stated accuracy of the test pressure device.

**§ 3174.157 Density verification (if applicable).**

If the API gravity of oil is determined from the average density measured by the Coriolis meter (rather than from a composite sample), then during each proving of the Coriolis meter, the instantaneous flowing density determined by the Coriolis meter must be verified by comparing it with an independent density measurement as specified under API 5.6, Subsection 9.1.2.1 (incorporated by reference, see § 3174.30). The difference between the indicated density determined from the Coriolis meter and the independently determined density must be within the specified density reference accuracy specification of the Coriolis meter. Sampling must be performed in accordance with API 8.1, API 8.2, or API 8.3 (all incorporated by reference, see § 3174.30), as appropriate.

**§ 3174.158 Meter proving reporting requirements.**

Meter proving reports may be in any format showing the information required in this section, provided that the calculation of meter factors maintains the proper calculation sequence and rounding. For example: The forms listed in API 12.2.3, Subsection 13 or API 5.6 Appendix C (see § 3174.30 for availability information) may be used.

(a) Each meter proving report must contain the following information recorded at the discrimination levels described in API 12.2.3, Section 11 (incorporated by reference, see § 3174.30):

(1) The information identified and required under the recordkeeping requirements of § 3170.50(g) of this part;

(2) Unique meter identification number;

(3) Meter specification data;

(4) Fluid data;

(5) Liquid properties at metering condition;

(6) Report data, including previous and current flow rates, totalizer, API gravity at 60 °F, and meter factor;

(7) For each proving run the following raw data must be documented:

(i) Run number;

(ii) Temperature of prover and meter;

(iii) Pressure of prover and meter; and

(iv) Pulses and/or intermediate meter factor, as applicable;

(8) Calculation of correction factors for both prover and meter;

(9) Calculation of meter factors;

(10) The temperature from the test thermometer and the temperature from the temperature averager or temperature transducer in accordance with § 3174.155;

(11) For pressure transducers (if applicable), the pressure applied by the pressure test device and the pressure reading from the pressure transducer at the three points required under § 3174.156(c);

(12) For density verification (if applicable), the instantaneous flowing density (as determined by the Coriolis meter), and the independent density measurement, as compared under § 3174.157; and

(13) If a composite meter factor will be used, the ''as left'' fluid flowing pressure after disconnecting the prover.

(b) In addition to the information required under paragraph (a) of this section, the operator must report to the AO all meter-proving and volume adjustments after any LACT system or CMS malfunction, including excessive meter-factor deviation.

(c) The meter-proving report must be made available to the AO upon request.

**§ 3174.160 Measurement tickets.**

Sections 3174.161 through 3174.162 outline the information required to be included on a uniquely numbered measurement ticket or volume statement, in either paper or electronic format, that must be completed prior to oil-volume reporting on an OGOR. Measurement tickets must be made available to the AO upon request.

**§ 3174.161 Tank-gauging measurement ticket.**

(a) The following information must be documented during the field tank-gauging operation by the operator, purchaser, or transporter, as appropriate:

(1) The information identified and required under the recordkeeping requirements of § 3170.50(g) of this part;

(2) Unique tank number and nominal tank capacity;

(3) Opening and closing dates and times;

(4) Opening and closing gauges and observed temperatures in °F;

(5) Observed API oil gravity and temperature in °F;

(6) S&W content percent;

(7) Unique number of each seal removed and installed; and

(8) Name of the individual performing the tank gauging.

(b) The following information is required to be calculated and documented on the measurement ticket upon the completion of the measurement ticket by the operator, purchaser, or transporter, as appropriate:

(1) Observed volume for opening and closing gauge, using tank-specific calibration charts (see § 3174.52);

(2) API oil gravity at 60 °F, following API 11.1 (incorporated by reference, see § 3174.30), utilizing the glass thermal expansion equation when using hydrometer or thermohydrometer; and

(3) Total net standard volume removed from the tank following API 11.1 and API 12.1.1, Subsections 10 and 11, (both incorporated by reference, see § 3174.30) or other methods approved by the BLM.

**§ 3174.162 LACT system and CMS measurement ticket or volume statement.**

At the beginning of every month, the operator, purchaser, or transporter, as appropriate, must document either a measurement ticket under paragraph (a) of this section, or a volume statement under paragraph (b) of this section. A measurement ticket under paragraph (a) of this section must also be closed when proving operations are conducted.

(a) A measurement ticket must include the following:

(1) The information identified and required under the recordkeeping requirements of § 3170.50(g) of this part;

(2) The unique meter identification number;

(3) Opening and closing dates and times;

(4) Opening and closing totalizer readings of the indicated volume;

(5) The meter factor, if meter factor is a composite meter factor, indicate as such;

(6) Total gross standard volume removed through the LACT system or CMS;

(7) API oil gravity. For API oil gravity determined from a composite sample, the observed API oil gravity and temperature must be indicated in °F and the API oil gravity must be indicated at 60 °F. For API oil gravity determined from average density (CMS only), the average uncorrected density must be determined by the CMS;

(8) The average temperature for the measurement period in °F;

(9) The average flowing pressure for the measurement period in psig;

(10) S&W content percent;

(11) Total net standard volume following API 11.1 and API 12.2.2, Subsections 9, 10 and 11 (both incorporated by reference, see § 3174.30) or other methods approved by the BLM.

(12) Unique number of each seal removed and installed; and

(13) Name of the purchaser's representative; or

(b) A volume statement must be generated by an ELM system from unaltered, unprocessed, and unedited daily or hourly (as applicable, see § 3174.120) QTRs or from measurement-data systems that have been approved by the BLM (see § 3174.121). The volume statement must contain the information identified in API 21.2, Subsection 10.3.1 (incorporated by reference, see § 3174.30). Volume statements must include the information identified and required under the recordkeeping requirements of § 3170.50(g) of this part.

(c) Any accumulators used in the determination of average pressure, average temperature, and average density for the measurement period must be reset to zero whenever a new measurement ticket is opened.

**§ 3174.170 Oil measurement by other methods.**

Any method of oil measurement other than the methods addressed in this rule or listed on the *www.blm.gov* website used at an FMP requires prior BLM approval (see § 3170.30 of this part).

**§ 3174.180 Determination of oil volumes by methods other than measurement.**

(a) Under 43 CFR 3162.7–2, when production cannot be measured due to spillage or leakage, the amount of production must be determined by using any method the AO approves or prescribes. This category of production may include, but is not limited to, oil that is classified as slop oil or waste oil.

(b) No oil may be classified or disposed of as waste oil unless the operator can demonstrate to the satisfaction of the AO that it is not economically feasible to put the oil into marketable condition.

(c) The operator may not sell or otherwise dispose of slop oil without prior written approval by Sundry Notice from the AO. Following the sale or disposal of slop oil, the operator must notify the AO by Sundry Notice of the volume sold or disposed of and the method used to compute the volume.

**§ 3174.190 Immediate assessments.**

Certain instances of noncompliance warrant the imposition of immediate assessments upon the BLM's discovery of the violation, as prescribed in the following table. Imposition of any of these assessments does not preclude other appropriate enforcement actions.

TABLE 1 TO § 3174.190: VIOLATIONS SUBJECT TO AN IMMEDIATE ASSESSMENT

| Violation: | Assessment amount per violation: |
|---|---|
| 1. Missing or nonfunctioning FMP LACT system components, as required by § 3174.100 | $1,000 |
| 2. Missing or nonfunctioning FMP CMS components, as required by § 3174.130 | 1,000 |
| 3. Failure to meet the proving frequency requirements for an FMP, detailed in § 3174.153 | 1,000 |
| 4. Failure to obtain a written approval, as required by § 3174.170, before using any oil measurement method other than tank gauging, LACT system, or CMS at a FMP | 1,000 |

■ 5. Revise subpart 3175 to read as follows:

## Subpart 3175—Measurement of Gas

Sec.

3175.10 Definitions and acronyms.
3175.20 General requirements.
3175.30 Incorporation by reference.
3175.31 Specific performance requirements.
3175.40 Measurement equipment requiring BLM approval.
3175.41 Approved measurement equipment.
3175.43 Data submission and notification requirements.
3175.50 Grandfathering.
3175.60 Timeframes for compliance.
3175.70 Measurement location.
3175.80 Flange-tapped orifice plate (primary device).
3175.90 Mechanical recorder (secondary device).
3175.91 Installation and operation of mechanical recorders.
3175.92 Verification and calibration of mechanical recorders.
3175.93 Integration statements.
3175.94 Volume determination.
3175.100 Electronic gas measurement (secondary and tertiary device).
3175.101 Installation and operation of electronic gas measurement systems.
3175.102 Verification and calibration of electronic gas measurement systems.
3175.103 Flow rate, volume, and average value calculation.
3175.104 Logs and records.
3175.110 Gas sampling and analysis.
3175.111 General sampling requirements.
3175.112 Sampling probe and tubing.
3175.113 Spot samples—general requirements.
3175.114 Spot samples—allowable methods.
3175.115 Spot samples—frequency.
3175.116 Composite sampling methods.
3175.117 On-line gas chromatographs.
3175.118 Gas chromatograph requirements.
3175.119 Components to analyze.
3175.120 Gas analysis report requirements.
3175.121 Effective date of a spot or composite gas sample.
3175.125 Calculation of heating value and volume.
3175.126 Reporting of heating value and volume.
3175.130 Requirements for gas storage agreement measurement points (GSAMPs).
3175.140 Temporary measurement.
3175.150 Immediate assessments.
Appendix A to Subpart 3175—Table of Atmospheric Pressures
Appendix B to Subpart 3175— Maximum Time Between Required Actions

**§ 3175.10 Definitions and acronyms.**

(a) As used in this subpart, the term:

*AGA Report No. (followed by a number)* means a standard prescribed by the American Gas Association, with the number referring to the specific standard.

*Area ratio* means the smallest unrestricted area at the primary device divided by the cross-sectional area of the meter tube. For example, the area ratio ($A_r$) of an orifice plate is the area of the orifice bore ($A_d$) divided by the area of the meter tube ($A_D$). For an orifice plate with a bore diameter (d) of 1.000 inches in a meter tube with an inside diameter (D) of 2.000 inches the area ratio is 0.25 and is calculated as follows:

$$A_d = \frac{\pi d^2}{4} = \frac{\pi \cdot 1.000^2}{4} = 0.7854 in^2 \qquad A_D = \frac{\pi D^2}{4} = \frac{\pi \cdot 2.000^2}{4} = 3.1416 in^2$$

$$A_r = \frac{A_d}{A_D} = \frac{0.7854 in^2}{3.1416 in^2} = 0.25$$

*As-found* means the reading of a mechanical or electronic transducer when compared to a certified test device, prior to making any adjustments to the transducer.

*As-left* means the reading of a mechanical or electronic transducer when compared to a certified test device, after making adjustments to the transducer, but prior to returning the transducer to service.

*Atmospheric pressure* means the pressure exerted by the weight of the atmosphere at a specific location.

*Beta ratio* means the reference inside diameter of the orifice bore divided by the reference inside diameter of the meter tube. This is also referred to as a diameter ratio.

*Bias* means a systematic shift in the mean value of a set of measurements away from the true value of what is being measured.

*British thermal unit (Btu)* means the amount of heat needed to raise the temperature of one pound of water by 1 °F.

*Component-type electronic gas measurement system* means an electronic gas measurement system comprising transducers and a flow computer, each identified by a separate make and model, from which performance specifications are obtained.

*Discharge coefficient* means an empirically derived correction factor that is applied to the theoretical differential flow equation in order to calculate a flow rate that is within stated uncertainty limits.

*Effective date of a spot or composite gas sample* means the first day on which the relative density and heating value determined from the sample are used in calculating the volume and quality on which royalty is based.

*Electronic gas measurement (EGM)* means all of the hardware and software necessary to convert the static pressure, differential pressure, and flowing temperature developed as part of a primary device, to a quantity, rate, or quality measurement that is used to determine Federal royalty. For orifice meters, this includes the differential-pressure transducer, static-pressure transducer, flowing-temperature transducer, on-line gas chromatograph (if used), flow computer, display, memory, and any internal or external processes used to edit and present the data or values measured.

*Element range* means the difference between the minimum and maximum value that the element (differential-pressure bellows, static-pressure element, and temperature element) of a mechanical recorder is designed to measure.

*Gas storage agreement measurement point (GSAMP)* means a point where the gas injected and withdrawn from a gas-storage agreement is measured and the measurement affects the calculation of the injection and withdrawal fees paid to the Federal Government, but does not affect the calculation of royalty due on native oil or gas produced from the gas storage area. The GSAMP will not be the FMP for the measurement of volumes for royalty determinations on native oil or gas produced from the gas storage area.

*GPA (followed by a number)* means a standard prescribed by the Gas Processors Association, with the number referring to the specific standard.

*Heating value* means the gross heat energy released by the complete combustion of one standard cubic foot of gas at 14.73 pounds per square inch absolute (psia) and 60 °F.

*Heating value variability* means the deviation of previous heating values over a given time period from the average heating value over that same time period, calculated at a 95 percent confidence level. Unless otherwise approved by the BLM, variability is determined with the following equation:

$$V_{95\%} = 100 \times \frac{\sigma_{HV} \times 2.776}{\overline{HV}}$$

where:

$V_{95\%}$ = heating value variability, %

$\sigma_{HV}$ = standard deviation of the previous five heating values

2.776 = the "student-t" function for a probability of 0.05 and 4 degrees of freedom (degree of freedom is the number of samples minus 1)

$\overline{HV}$ = the average heating value over the time period used to determine the standard deviation.

*High-volume Facility Measurement Point (or high-volume FMP)* means any FMP that measures more than 200 Mcf/day, but less than or equal to 1,000 Mcf/day over the averaging period.

*Hydrocarbon dew point (HCDP)* means the temperature at which hydrocarbon liquids begin to form within a gas mixture. For the purpose of this regulation, the hydrocarbon dew point is the flowing temperature of the gas measured at the FMP, unless otherwise approved by the AO.

*Integration* means a process by which the lines on a circular chart (differential pressure, static pressure, and flowing temperature) used in conjunction with a mechanical chart recorder are re-traced or interpreted in order to determine the volume that is represented by the area under the lines. An integration statement documents the values determined from the integration.

*Live input variable* means a datum that is automatically obtained in real time by an EGM system.

*Low-volume FMP* means any FMP that measures more than 35 Mcf/day, but less than or equal to 200 Mcf/day, over the averaging period.

*Lower calibrated limit* means the minimum engineering value for which a transducer was calibrated by certified equipment, either in the factory or in the field.

*Mean* means the sum of all the values in a data set divided by the number of values in the data set.

*Mole percent* means the number of molecules of a particular type that are present in a gas mixture divided by the total number of molecules in the gas mixture, expressed as a percentage.

*Nonanes-plus ($C_9$+) analysis* means a gas analysis that individually measures the gas components from methane ($C_1$) through octanes ($C_8$). Components with higher molecular weights than octanes ($C_8$) are grouped together into the nonanes-plus ($C_9$+) component.

*Normal flowing point* means the average differential pressure, static pressure, and flowing temperature at an FMP taken over a time period of not less than 1 day and not more than 31 days.

*Primary device* means the volume-measurement equipment installed in a pipeline that creates a measurable and predictable pressure drop in response to the flow rate of fluid through the pipeline. It includes the pressure-drop device, device holder, pressure taps, required lengths of pipe upstream and downstream of the pressure-drop device, and any flow conditioners that may be used to establish a fully developed symmetrical flow profile.

*Published inside diameter* means the inside diameter of a pipe published in a standard piping table as a function of nominal pipe size and schedule. For example, the published inside diameter of a 2-inch pipe is 2.067 inches.

*Qualified test facility* means a facility with currently certified measurement systems for mass, length, time, temperature, and pressure traceable to the NIST primary standards or applicable international standards approved by the BLM.

*Quantity transaction record (QTR)* means a report generated by an EGM system that summarizes the daily and hourly volumes calculated by the flow computer and the average or totals of the dynamic data that is used in the calculation of volume.

*Redundancy verification* means a process of verifying the accuracy of an EGM system by comparing the readings of two sets of transducers placed on the same primary device.

*Reference inside diameter* means the measured inside diameter corrected to a reference temperature (68 °F).

*Reynolds number* means the ratio of the inertial forces to the viscous forces of the fluid flow, and is defined as:

$$R_e = \frac{V \rho D}{\mu}$$

Where:

$R_e$ = the Reynolds number
V = velocity
ρ = fluid density
D = inside meter tube diameter
μ = fluid viscosity

*Secondary device* means the differential-pressure, static-pressure, and temperature transducers in an EGM system, or a mechanical recorder, including the differential pressure, static pressure, and temperature elements, and the clock, pens, pen linkages, and circular chart.

*Self-contained EGM system* means an EGM system in which the transducers and flow computer are identified by a single make and model number from which the performance specifications for the transducers and flow computer are obtained. Any change to the make or model numbers of either a transducer or a flow computer within a self-contained EGM system changes the system to a component-type EGM system.

*Senior fitting* means a type of orifice plate holder that allows the orifice plate to be removed, inspected, and replaced

without isolating and depressurizing the meter tube.

*Standard cubic foot (scf)* means a cubic foot of gas at 14.73 psia and 60 °F.

*Standard deviation* means a measure of the variation in a distribution, and is equal to the square root of the arithmetic mean of the squares of the deviations of each value in the distribution from the arithmetic mean of the distribution.

*Tertiary device* means, for EGM systems, the flow computer and associated memory, calculation, and display functions.

*Threshold of significance* means the maximum difference between two data sets (a and b) that can be attributed to uncertainty effects. The threshold of significance is determined as follows:

$$T_s = \sqrt{U_a^2 + U_b^2}$$

Where:

$T_s$ = Threshold of significance, in percent

$U_a$ = Uncertainty (95 percent confidence) of data set a, in percent

$U_b$ = Uncertainty (95 percent confidence) of data set b, in percent

*Transducer* means an electronic device that converts a physical property such as pressure, temperature, or electrical resistance into an electrical output signal that varies proportionally with the magnitude of the physical property. Typical output signals are in the form of electrical potential (volts), current (milliamps), or digital pressure or temperature readings. The term transducer includes devices commonly referred to as transmitters.

*Turndown* means a reduction of the measurement range of a transducer in order to improve measurement accuracy at the lower end of its scale. It is typically expressed as the ratio of the upper range limit to the upper calibrated limit.

*Type test* means a test on a representative number of a specific make, model, and range of a device to determine its performance over a range of operating conditions.

*Uncertainty* means the range of error that could occur between a measured value and the true value being measured, calculated at a 95 percent confidence level.

*Upper calibrated limit* means the maximum engineering value for which a transducer was calibrated by certified equipment, either in the factory or in the field. This is also referred to as span.

*Upper range limit (URL)* means the maximum value that a transducer is designed to measure.

*Verification* means the process of determining the amount of error in a differential pressure, static pressure, or temperature transducer or element by comparing the readings of the transducer or element with the readings from a certified test device with known accuracy.

*Very-high-volume FMP* means any FMP that measures more than 1,000 Mcf/day over the averaging period.

*Very-low-volume FMP* means any FMP that measures 35 Mcf/day or less over the averaging period.

(b) As used in this subpart the following additional acronyms carry the meaning prescribed:

*GARVS* means the BLM's Gas Analysis Reporting and Verification System.

*GC* means gas chromatograph.

*GPA* means the Gas Processors Association.

*Mcf* means 1,000 standard cubic feet.

*psia* means pounds per square inch—absolute.

*psig* means pounds per square inch—gauge.

**§ 3175.20 General requirements.**

(a) Measurement of all gas at an FMP must comply with the standards prescribed in §§ 3175.10 through 3175.126; § 3175.140, if applicable; and § 3175.150, except as otherwise approved under § 3170.40 of this part.

(b) Measurement of all gas at a GSAMP must comply with the standards prescribed in § 3175.130, except as otherwise approved under § 3170.40 of this part.

**§ 3175.30 Incorporation by reference.**

(a) Certain material identified is incorporated by reference into this part with the approval of the Director of the Federal Register under 5 U.S.C. 552(a) and 1 CFR part 51. To enforce any edition other than that specified in this section, the BLM must publish a rule in the **Federal Register** and the material must be reasonably available to the public. All approved material is available for inspection at the Bureau of Land Management, Division of Fluid Minerals, 20 M Street SE, Washington, DC 20003, 202–912–7162; and at all BLM offices with jurisdiction over oil and gas activities; and is available from the sources listed as follows. It is also available for inspection at the National Archives and Records Administration (NARA). For information on the availability of this material at NARA, email *fedreg.legal@nara.gov* or go to *www.archives.gov/federal-register/cfr/ibr-locations.html.*

(b) American Gas Association (AGA), 400 North Capitol Street NW, Suite 450, Washington, DC 20001; telephone 202–824–7000.

(1) AGA Report No. 3, Orifice Metering of Natural Gas and Other Related Hydrocarbon Fluids; Second Edition, September, 1985 (''AGA Report No. 3 (1985)''), IBR approved for §§ 3175.50(b) and (c), 3175.80(n), and 3175.94(a).

(2) AGA Transmission Measurement Committee Report No. 8, Compressibility Factors of Natural Gas and Other Related Hydrocarbon Gases; Second Edition, November 1992 (''AGA Report No. 8 (1992)''), IBR approved for § 3175.50(c).

(3) AGA Transmission Measurement Committee Report No. 8, Part 1, Thermodynamic Properties of Natural Gas and Related Gases, Detail and Gross Equations of State; Third Edition, April 2017 (''AGA Report No. 8 Part 1''), IBR approved for §§ 3175.103(a), 3175.120(d).

(4) AGA Transmission Measurement Committee Report No. 8, Part 2, Thermodynamic Properties of Natural Gas and Related Gases, GERG–2008 Equation of State; First Edition, April 2017 (''AGA Report No. 8 Part 2''), IBR approved for §§ 3175.103(a), 3175.120(d).

(c) American Petroleum Institute (API), 1220 L Street NW, Washington, DC 20005; telephone 202–682–8000. API also offers free, read-only access to all of the material at *http://publications.api.org.*

(1) API Manual of Petroleum Measurement Standards (MPMS) Chapter 14—Natural Gas Fluids Measurement, Section 1—Collecting and Handling of Natural Gas Samples for Custody Transfer; Seventh Edition, May 2016; Addendum, August 2017; Errata, August 2017 (''API 14.1''),'' IBR approved for §§ 3175.80(p), 3175.112(c), 3175.113(c), 3175.114(b).

(2) API MPMS, Chapter 14, Section 3, Orifice Metering of Natural Gas and Other Related Hydrocarbon Fluids—Concentric, Square-edged Orifice Meters, Part 1: General Equations and Uncertainty Guidelines; Fourth Edition, September 2012; Errata, July 2013 (''API 14.3.1''), IBR approved for §§ 3175.31(a), 3175.80(a).

(3) API MPMS Chapter 14, Section 3, Orifice Metering of Natural Gas and Other Related Hydrocarbon Fluids—Concentric, Square-edged Orifice Meters, Part 2: Specification and Installation Requirements; Fifth Edition, March 2016; Errata 1, March 2017; Errata 2, January 2019 (''API 14.3.2''), IBR approved for §§ 3175.50(b), 3175.80(b), (e) through (i), (l) through (o), Table 1 to § 3175.80.

(4) API MPMS Chapter 14, Section 3, Orifice Metering of Natural Gas and Other Related Hydrocarbon Fluids—Concentric, Square-edged Orifice Meters, Part 3: Natural Gas

Applications; Fourth Edition, November 2013 (''API 14.3.3 (2013)''),'' IBR approved for §§ 3175.50(c), 3175.94(a), and 3175.103(a).

(5) API MPMS Chapter 14, Natural Gas Fluids Measurement, Section 3, Concentric, Square-Edged Orifice Meters, Part 3, Natural Gas Applications, Third Edition, August, 1992 (''API 14.3.3 (1992)''), IBR approved for § 3175.50(c).

(6) API MPMS, Chapter 14.5, Calculation of Gross Heating Value, Relative Density, Compressibility and Theoretical Hydrocarbon Liquid Content for Natural Gas Mixtures for Custody Transfer; Third Edition, January 2009; Reaffirmed, February 2014 (''API 14.5''), IBR approved for §§ 3175.120(c), and 3175.125(a).

(7) API MPMS Chapter 21.1, Flow Measurement Using Electronic Metering Systems—Electronic Gas Measurement; Second Edition, February 2013 (''API 21.1''), IBR approved for *Table 1 to § 3175.100,* §§ 3175.101(e), 3175.102(a) and (c) through (e), 3175.103(c), and 3175.104(a) through (d).

(d) Gas Processors Association (GPA), 6526 E 60th Street, Tulsa, OK 74145; telephone 918–493–3872.

(1) GPA Midstream Standard 2166–17, Obtaining Natural Gas Samples for Analysis by Gas Chromatography; Reaffirmed 2017 (''GPA 2166–17''), IBR approved for §§ 3175.113(c), 3175.114(a), and 3175.117(a).

(2) GPA Midstream Standard 2261–19, Analysis for Natural Gas and Similar Gaseous Mixtures by Gas Chromatography; Revised 2019 (''GPA 2261–19''),'' IBR approved for § 3175.118(a) and (c).

(3) GPA Midstream Standard 2198–16, Selection, Preparation, Validation, Care and Storage of Natural Gas and Natural Gas Liquids Reference Standard Blends; Revised 2016 (''GPA 2198–16''), IBR approved for § 3175.118(c).

(e) Pipeline Research Council International (PRCI), 3141 Fairview Park Dr., Suite 525, Falls Church, VA 22042; telephone 703–205–1600.

(1) PRCI Contract-NX–19, Manual for the Determination of Supercompressibility Factors for Natural Gas; December 1962 (''PRCI NX 19''), IBR approved for § 3175.50(c).

(2) [Reserved]

**Note 1 to paragraphs (b) through (e):** You may also be able to purchase these standards from the following resellers: Techstreet, 3916 Ranchero Drive, Ann Arbor, MI 48108; telephone 734–780–8000; *www.techstreet.com/api/apigate.html;* IHS Inc., 321 Inverness Drive South, Englewood, CO 80112; 303–790–0600; *www.ihs.com;* SAI Global, 610 Winters Ave., Paramus, NJ 07652; telephone 201–986–1131; *http://infostore.saiglobal.com/store/.*

**§ 3175.31 Specific performance requirements.**

(a) *Flow rate measurement uncertainty levels.* (1) For high-volume FMPs, the measuring equipment must achieve an overall flow rate measurement uncertainty within ±3 percent.

(2) For very-high-volume FMPs, the measuring equipment must achieve an overall flow rate measurement uncertainty within ±2 percent.

(3) There is no uncertainty requirement for low- and very-low-volume FMPs.

(4) The determination of uncertainty is based on the values of flowing parameters (*e.g.,* differential pressure, static pressure, and flowing temperature for differential meters or velocity, mass flow rate, or volumetric flow rate for linear meters) determined as follows, listed in order of priority:

(i) The average flowing parameters listed on the most recent daily QTR, if available to the BLM at the time of the uncertainty determination; or

(ii) The average flowing parameters from the previous day, as required under § 3175.101(b)(4)(i) through (iii) (for differential meters).

(5) The uncertainty must be calculated under API 14.3.1, Section 12 (incorporated by reference, see § 3175.30) or other methods approved by the AO.

(b) *Heating value uncertainty levels.* (1) For high-volume FMPs, the measuring equipment must achieve an annual average heating value uncertainty within ±3 percent.

(2) For very-high-volume FMPs, the measuring equipment must achieve an annual average heating value uncertainty within ±2 percent.

(3) There is no heating value uncertainty requirement for low- and very-low-volume FMPs.

(4) Unless otherwise approved by the AO, the average annual heating value uncertainty must be determined as follows:

$$U_{\overline{HV}} = 0.951 \times V_{95\%} \sqrt{\frac{1}{N}}$$

where:

$U_{\overline{HV}}$ = average annual heating value uncertainty

$V_{95\%}$ = heating value variability

$N$ = the number of samples taken per year (N = 1, 2, 4, 6, 12, or 26)

(c) *Bias.* For low-volume, high-volume, and very-high-volume FMPs, the measuring equipment used for either flow rate or heating value determination must achieve measurement without statistically significant bias.

(d) *Verifiability.* An operator may not use measurement equipment for which the accuracy and validity of any input, factor, or equation used by the measuring equipment to determine quantity, rate, or heating value are not independently verifiable by the BLM. Verifiability includes the ability to independently recalculate the volume, rate, and heating value based on source records and field observations.

**§ 3175.40 Measurement equipment requiring BLM approval.**

Except as allowed under § 3175.50(a), all makes, models, sizes, and software versions of the devices listed in this section that are used at FMPs must be

approved by the BLM and posted in the PMT section at *www.blm.gov.* BLM approval will be based upon a showing that the equipment meets or exceeds the performance requirements of § 3175.31. To obtain approval, the applicant must submit an application to the PMT. Recommended testing procedures will be listed at *www.blm.gov.*

(a) Transducers, when used at high- and very-high volume FMPs;

(b) Flow-computer software, when used at high- and very-high volume FMPs;

(c) Isolating flow conditioners;

(d) Differential pressure meters other than flange-tapped orifice plates;

(e) Coriolis meters;

(f) Ultrasonic meters;

(g) Software used to capture and process the output from a GC;

(h) Water vapor measurement equipment and methods; and

(i) Measurement data systems.

**§ 3175.41 Approved measurement equipment.**

The measurement equipment described in this section is approved for use at FMPs, provided it meets or exceeds the minimum standards prescribed in this subpart:

(a) Flange-tapped orifice plates, associated fittings, and meter tubes that are constructed, installed, operated, and maintained in accordance with the standards in § 3175.80;

(b) Chart recorders, when used in conjunction with low- and very-low volume FMPs, that are installed, operated, and maintained in accordance with the standards in § 3175.90;

(c) GCs that meet the standards in §§ 3175.117 and 3175.118 for determining heating value and relative density;

(d) Transducers, when used at low- and very-low volume FMPs, must meet the requirements of § 3175.102; and

(e) Flow-computer software, when used at low- and very-low volume FMPs, must meet the requirements of § 3175.101.

**§ 3175.43 Data submission and notification requirements.**

(a) The operator must submit the following to the AO upon request:

(1) Documentation of orifice-plate inspection for FMPs measuring gas from newly drilled or hydraulically fractured wells (see § 3175.80(e));

(2) Documentation of routine orifice-plate inspection (see § 3175.80(e));

(3) Documentation of basic meter-tube inspection (see § 3175.80(j)(6));

(4) Documentation of detailed meter-tube inspection (see § 3175.80(l));

(5) Documentation of mechanical recorder verification after repair or installation (see § 3175.92(d));

(6) Documentation of routine mechanical recorder verification (see § 3175.92(d));

(7) Documentation of EGM system verification after repair or installation (see § 3175.102(e));

(8) Documentation of routine EGM system verification (see § 3175.102(e));

(9) EGM audit trail data including QTR, configuration log, event log, and alarm log (see § 3175.104);

(10) MDS audit trail data including QTR, configuration log, event log, and alarm log (see § 3175.104(e));

(11) GC verification report (see § 3175.118(d)); and

(12) Gas analysis report (see § 3175.120).

(b) Notification requirements to the AO: The operator must notify the AO at the specified time period listed in this paragraph before conducting the following procedures:

(1) Twenty-four (24) hours prior to performing a detailed meter-tube inspection (see § 3175.80(k)(3));

(2) Seventy-two (72) hours prior to performing a basic meter-tube inspection (see § 3175.80(j)(4)); and

(3) Seventy-two (72) hours prior to taking a gas sample (see § 3175.113(b)).

**§ 3175.50 Grandfathering.**

(a) *Exemption.* Equipment listed in § 3175.40(a) through (f) that was installed at a very-low, low-, or high-volume FMP prior to [EFFECTIVE DATE OF FINAL RULE] is exempt from the approval requirement in § 3175.40. Any of the equipment listed in § 3175.40(a) through (i) that was installed after [EFFECTIVE DATE OF FINAL RULE] must meet the approval requirement in § 3175.40.

(b) *Meter tubes.* (1) Meter tubes installed at low- and high-volume FMPs before January 17, 2017, are exempt from the meter tube requirements of API 14.3.2, Subsection 6.2 (incorporated by reference, see § 3175.30) and § 3175.80(h) and (m). For high-volume FMPs, the BLM will add an uncertainty of ±0.25 percent to the discharge coefficient uncertainty when determining overall meter uncertainty under § 3175.31(a), unless the operator provides data to the PMT that shows a lower uncertainty is justified, and the BLM approves a lower uncertainty. If a meter tube is replaced, it must meet the requirements of API 14.3.2, Subsection 6.2 (incorporated by reference, see § 3175.30), and § 3175.80(h) and (m). Meter tubes grandfathered under this section must still meet the following requirements:

(i) Orifice plate eccentricity must comply with AGA Report No. 3 (1985), Section 4.2.4 (incorporated by reference, see § 3175.30);

(ii) Meter tube construction and condition must comply with AGA Report No. 3 (1985), Section 4.3.4 (incorporated by reference, see § 3175.30); and

(iii) Meter tube lengths.

(A) Meter tube lengths must comply with AGA Report No. 3 (1985), Section 4.4 (dimensions ''A'' and ''A'' from Figures 4–8) (incorporated by reference, see § 3175.30).

(B) If the upstream meter tube contains a 19-tube bundle flow straightener or isolating flow conditioner, the installation must comply with § 3175.80(i);

(2) For meter tubes installed at very-low-, low-, and high-volume FMPs before January 17, 2017, operators may use the measured inside diameter of the meter tube as required by AGA Report No. 3 (1985), Section 4.3.3 (incorporated by reference, see § 3175.30), in lieu of the reference inside diameter of the meter tube for the requirements of §§ 3175.91(d)(7), 3175.92(d)(2), 3175.93(d), 3175.101(c)(5), and 3175.102(e)(1)(iii), and flow-rate calculations. If a meter tube is replaced, operators must use the reference inside diameter of the meter tube to meet the requirements of §§ 3175.91(d)(7), 3175.92(d)(2), 3175.93(d), 3175.101(c)(5), and 3175.102(e)(1)(iii), and for flow-rate calculations.

(c) *EGM software.* (1) EGM software installed at very-low-volume FMPs before January 17, 2017, is exempt from the requirements in § 3175.103(a)(1). However, flow-rate calculations must still be calculated in accordance with AGA Report No. 3 (1985), Section 6, or API 14.3.3 (1992) (both incorporated by reference, see § 3175.30), and supercompressibility calculations must still be calculated in accordance with PRCI NX 19 or AGA Report No. 8 (1992) (both incorporated by reference, see § 3175.30).

(2) EGM software installed at low-volume FMPs before January 17, 2017, is exempt from:

(i) The requirements at § 3175.103(a)(1)(i), if the differential-pressure to static-pressure ratio, based on the monthly average differential pressure and static pressure, is less than the value of ''x1'' shown in API 14.3.3 (2013), Annex G, Table G.1 (incorporated by reference, see § 3175.30). However, flow-rate calculations must still be calculated in accordance with API 14.3.3 (1992) (incorporated by reference, see § 3175.30); and

(ii) The requirements at § 3175.103(a)(1)(ii). However, compressibility must still be calculated in accordance with AGA Report No. 8 (1992) (incorporated by reference, see § 3175.30).

**§ 3175.60 Timeframes for compliance.**

Except as provided in paragraphs (a) through (d) of this section, the measuring procedures and equipment installed at any FMP or GSAMP, per § 3175.130, must comply with all of the requirements of this subpart as of [EFFECTIVE DATE OF FINAL RULE].

(a) Measuring equipment and procedures installed at very-low-volume FMPs before January 17, 2017, must comply with all of the requirements of this subpart as of [EFFECTIVE DATE OF FINAL RULE].

(b) The gas analysis reporting requirements of § 3175.120(e) and (f) of this subpart will begin 90 days after the BLM notifies operators that GARVS is available for use.

(c) Equipment approvals required in § 3175.40 will be required after [DATE TWO YEARS AFTER EFFECTIVE DATE OF FINAL RULE].

(d) EGM systems must display the flow computer software version as required by § 3175.101(b)(4) after [DATE TWO YEARS AFTER EFFECTIVE DATE OF FINAL RULE].

**§ 3175.70 Measurement location.**

(a) *Commingling and allocation.* Gas produced from a lease, unit PA, or CA may not be commingled with production from other leases, unit PAs, CAs, or non-Federal properties before the point of royalty measurement, unless prior approval is obtained under 43 CFR subpart 3173.

(b) *Off-lease measurement.* Gas must be measured on the lease, unit, or CA unless approval for off-lease measurement is obtained under 43 CFR subpart 3173.

**§ 3175.80 Flange-tapped orifice plate (primary device).**

Except as provided in § 3175.50, all flange-tapped orifice plates must comply with the following standards and requirements. (Note: Table 1 to this section lists the standards in this subpart and the API standards that the operator must follow to install and maintain flange-tapped orifice plates. A requirement applies when a column is marked with an ''x'' or a number.).

(a) Fluid conditions must comply with API 14.3.1, Subsection 4.1 (incorporated by reference, see § 3175.30).

(b) Orifice plate eccentricity must comply with API 14.3.2, Subsection 6.2.1 (incorporated by reference, see § 3175.30), and the perpendicularity of the orifice plate holder must maintain the plane of the orifice plate at an angle of 90 degrees to the meter tube axis.

(c) The Beta ratio must be no less than 0.10 and no greater than 0.75.

(d) The orifice bore diameter must be no less than 0.45 inches.

(e) For FMPs measuring production from wells first coming into production, or from existing wells that have been re-fractured (including FMPs already measuring production from one or more other wells), the operator must inspect the orifice plate upon installation and then every 2 weeks thereafter. If the orifice plate does not comply with API 14.3.2, Section 4 (incorporated by reference, see § 3175.30), the operator must replace the orifice plate. When the orifice plate complies with API 14.3.2, Section 4, the operator thereafter must inspect the orifice plate as prescribed in paragraph (f) of this section.

(f)(1) The operator must pull and inspect the orifice plate at the frequency (in months) identified in Table 1 to § 3175.80 of this section.

(2) The time between any two orifice-plate inspections must not exceed the time frames shown in appendix B of this subpart.

(3) The operator must replace orifice plates that do not comply with API 14.3.2, Section 4 (incorporated by reference, see § 3175.30), with an orifice plate that does comply with these standards.

(g) The operator must retain documentation for every plate inspection and must include that documentation as part of the verification report (see § 3175.92(d) for mechanical recorders, or § 3175.102(e) for EGM systems). The operator must provide that documentation to the BLM upon request. The documentation must include:

(1) The information required in § 3170.50(g) of this part;

(2) Plate orientation (bevel upstream or downstream);

(3) Measured orifice bore diameter;

(4) Plate condition (documenting compliance with API 14.3.2, Section 4 (incorporated by reference, see § 3175.30));

(5) The presence of oil, grease, paraffin, scale, or other contaminants on the plate;

(6) Time and date of inspection; and

(7) Whether or not the plate was replaced.

(h) Meter tubes must meet the requirements of API 14.3.2, Subsections 5.1 through 5.4 (incorporated by reference, see § 3175.30).

(i) If flow conditioners are used, they must be either isolating-flow conditioners approved by the BLM and installed under BLM requirements (see § 3175.41) or 19-tube-bundle flow straighteners constructed in compliance with API 14.3.2, Subsections 5.5.2 through 5.5.4, and located in compliance with API 14.3.2, Subsection 6.3 (incorporated by reference, see § 3175.30).

(j) After initial installation of a meter tube at an FMP on or after [EFFECTIVE DATE OF FINAL RULE], the operator must perform an initial basic meter-tube inspection (see paragraph (k)(2) through (7) of this section) within the following timeframes:

(1) For a very-high-volume FMP, within 1 year of the installation date; and

(2) For a high-volume FMP, within 2 years of the installation date.

(k) *Routine basic meter-tube inspection.* (1) Conduct a basic inspection of meter tubes within the timeframe (in years) specified in Table 1 to this section;

(2) Conduct a basic meter-tube inspection that is able to identify obstructions, pitting, and buildup of foreign substances (*e.g.,* grease and scale);

(3) If the basic meter-tube inspection identifies obstructions, pitting, or buildup of foreign substances, the operator must take one of the following actions, as applicable, within 30 days:

(i) For low, high, and very-high volume FMPs, if the basic meter-tube inspection only indicates the presence of an obstruction (such as debris in front of the flow conditioner), the operator must remove the obstruction;

(ii) For low-volume FMPs, if the basic inspection indicates the buildup of foreign substances, the operator must clean the meter tube of the buildup (no action is required if the basic meter-tube inspection only identifies pitting);

(iii) For high and very-high volume FMPs, if the basic inspection indicates pitting or the buildup of foreign substances, the operator must repair or clean the tube and then perform a detailed meter-tube inspection under paragraph (l) of this section; or

(iv) Submit a request to the AO for an extension of the 30-day timeframe, justifying the need for the extension.

(4) Notify the AO at least 72 hours in advance of performing a basic inspection or submit a monthly or quarterly schedule of basic inspections to the AO in advance;

(5) Conduct additional inspections, as the AO may require, if warranted by conditions such as corrosive or erosive-flow (*e.g.,* high hydrogen sulfide ($H_2S$) or carbon dioxide ($CO_2$) content) or

signs of physical damage to the meter tube;

(6) Maintain documentation of the findings from the basic meter-tube inspection including:

(i) The information required in § 3170.50(g) of this part;

(ii) The time and date of inspection;

(iii) The type of equipment used to make the inspection; and

(iv) A description of findings, including location and severity of pitting, obstructions, and buildup of foreign substances; and

(7) Complete the first inspection after [EFFECTIVE DATE OF FINAL RULE] within the timeframes (in years) given in Table 1 to this section. The timeframes start:

(i) For meter tubes at high- or very-high-volume FMPs installed on or after [EFFECTIVE DATE OF FINAL RULE], when the initial basic meter-tube inspection was performed;

(ii) For meter tubes at low-volume FMPs installed on or after [EFFECTIVE DATE OF FINAL RULE], when flow first goes through the meter;

(iii) For meter tubes at FMPs installed before [EFFECTIVE DATE OF FINAL RULE], when the previous basic or detailed meter-tube inspection was performed, or [EFFECTIVE DATE OF FINAL RULE], whichever is earlier.

(l)(1) If a detailed inspection is required under paragraph (k)(3)(iii) of this section, the operator must physically measure and inspect the meter tube to determine if the meter tube complies with API 14.3.2, Subsections 5.1 through 5.4 and Subsection 6.2 (incorporated by reference, see § 3175.30), or the requirements under § 3175.50(b), if the meter tube is grandfathered under § 3175.50(b). If the meter tube does not comply with the applicable standards, the operator must repair the meter tube to bring the meter tube into compliance with these standards or replace the meter tube with one that meets these standards.

(2) For all high- and very-high volume FMPs installed after [EFFECTIVE DATE OF FINAL RULE], the operator must perform a detailed inspection under paragraph (l) of this section before operation of the meter. The operator may submit documentation showing that the meter tube complies with API 14.3.2, Subsections 5.1 through 5.4 and Subsection 6.2 (incorporated by reference, see § 3175.30) in lieu of performing a detailed inspection.

(3) The operator must notify the AO at least 24 hours before performing a detailed inspection.

(m) The operator must retain documentation of all detailed meter-tube inspections, demonstrating that the meter tube complies with API 14.3.2, Subsections 5.1 through 5.4 (incorporated by reference, see § 3175.30), and showing all required measurements. The operator must provide such documentation to the BLM upon request for every meter-tube inspection. Documentation must also include the information required in § 3170.50(g) of this part.

(n)(1) Meter-tube lengths and the location of 19-tube-bundle flow straighteners, if applicable, must comply with API 14.3.2, Subsection 6.3 (incorporated by reference, see § 3175.30).

(2) For Beta ratios of less than 0.5, the location of 19-tube bundle flow straighteners installed in compliance with AGA Report No. 3 (1985), Section 4.4 (incorporated by reference, see § 3175.30), also complies with the location of 19-tube bundle flow straighteners as required in paragraph (1) of this section.

(3) If the diameter ratio (β) falls between the values in Tables 7, 8a, or 8b of API 14.3.2, Subsection 6.3 (incorporated by reference, see § 3175.30), the length identified for the larger diameter ratio in the appropriate Table is the minimum requirement for meter-tube length and determines the location of the end of the 19-tube-bundle flow straightener closest to the orifice plate. For example, if the calculated diameter ratio is 0.41, use the table entry for a 0.50 diameter ratio.

(o)(1) Thermometer wells used for determining the flowing temperature of the gas as well as thermometer wells used for verification (test well) must be located in compliance with API 14.3.2, Subsection 6.5 (incorporated by reference, see § 3175.30).

(2) Thermometer wells must be located in such a way that they can sense the same flowing gas temperature that exists at the orifice plate. The operator may accomplish this by physically locating the thermometer well(s) in the same ambient temperature conditions as the primary device (such as in a heated meter house) or by installing insulation and/or heat tracing along the entire meter run. If the operator chooses to use insulation to comply with this requirement, the AO may prescribe the quality of the insulation based on site-specific factors such as ambient temperature, flowing temperature of the gas, composition of the gas, and location of the thermometer well in relation to the orifice plate (*i.e.,* inside or outside of a meter house).

(3) Where multiple thermometer wells have been installed in a meter tube, the flowing temperature must be measured from the thermometer well closest to the primary device.

(4) Thermometer wells used to measure or verify flowing temperature must contain a thermally conductive liquid.

(p) The sample probe must be the first obstruction, and at least five published inside pipe diameters, downstream of the primary device.

(1) For horizontal meter tubes, the sample probe must also be located in the meter tube vertically at the top of a straight run of pipe in accordance with API 14.1, Subsection 6.4.2 (incorporated by reference, see § 3175.30).

(2) For vertical meter tubes, the sample probe must be mounted perpendicular to the vertical meter tube.

TABLE 1 TO § 3175.80: STANDARDS FOR FLANGE-TAPPED ORIFICE PLATES

| Subject | Reference (API standards incorporated by reference, see § 3175.30) | VL | L | H | VH |
|---|---|---|---|---|---|
| Fluid conditions | § 3175.80(a) | n/a | x | x | x |
| Orifice plate construction and condition | API 14.3.2, Section 4 | x | x | x | x |
| Orifice plate eccentricity and perpendicularity** | § 3175.80(b) | n/a | x | x | x |
| Beta ratio range | § 3175.80(c) | n/a | x | x | x |
| Minimum orifice size | § 3175.80(d) | n/a | n/a | x | x |
| New FMP orifice-plate inspection* | § 3175.80(e) | n/a | x | x | x |
| Routine orifice-plate inspection frequency, in months* | § 3175.80(f) | 12 | 6 | 3 | 1 |
| Documentation of orifice-plate inspection | § 3175.80(g) | x | x | x | x |
| Meter-tube construction and condition** | § 3175.80(h) | n/a | x | x | x |
| Flow conditioners including 19-tube bundles | § 3175.80(i) | n/a | x | x | x |
| Initial basic meter-tube inspection | § 3175.80(j) | n/a | n/a | x | x |

TABLE 1 TO § 3175.80: STANDARDS FOR FLANGE-TAPPED ORIFICE PLATES—Continued

| Subject | Reference (API standards incorporated by reference, see § 3175.30) | VL | L | H | VH |
|---|---|---|---|---|---|
| Routine basic meter-tube inspection frequency, in years * | § 3175.80(k) | n/a | 10 | 5 | 5 |
| Detailed meter-tube inspection * | § 3175.80(l) | n/a | n/a | x | x |
| Documentation of detailed meter-tube inspection | § 3175.80(m) | n/a | n/a | x | x |
| Meter-tube length ** | § 3175.80(n) | n/a | x | x | x |
| Thermometer wells | § 3175.80(o) | n/a | x | x | x |
| Sample probe location | § 3175.80(p) | x | x | x | x |

VL=Very-low-volume FMP; L=Low-volume FMP; H=High-volume FMP; VH=Very-high-volume FMP.
* = Immediate assessment for non-compliance under § 3175.150.
** = Applies to all very-high-volume FMPs and meter tubes installed at low- and high-volume FMPs after [EFFECTIVE DATE OF FINAL RULE]. See § 3175.50 for requirements pertaining to meter tubes installed at low- and high-volume FMPs before [EFFECTIVE DATE OF FINAL RULE].

**§ 3175.90 Mechanical recorder (secondary device).**

(a) The operator may use a mechanical recorder as a secondary device only on very-low-volume and low-volume FMPs.

(b) Table 1 to this section lists the standards that the operator must follow to install, operate, and maintain mechanical recorders. A requirement applies when a column is marked with an ''x'' or a number.

TABLE 1 TO § 3175.90: STANDARDS FOR MECHANICAL RECORDERS

| Subject | Reference | VL | L |
|---|---|---|---|
| Applications for use | § 3175.90(a) | x | x |
| Manifolds and gauge/impulse lines | § 3175.91(a) | n/a | x |
| Differential-pressure pen position | § 3175.91(b) | n/a | x |
| Flowing temperature recording | § 3175.91(c) | n/a | x |
| On-site data requirements | § 3175.91(d) | x | x |
| Operating within the element ranges | § 3175.91(e) | x | x |
| Verification after installation or following repair * | § 3175.92(a) | x | x |
| Routine verification and verification frequency, in months * | § 3175.92(b) | 6 | 3 |
| Routine verification procedures | § 3175.92(c) | x | x |
| Documentation of verification | § 3175.92(d) | x | x |
| Notification of verification | § 3175.92(e) | x | x |
| Volume correction | § 3175.92(f) | n/a | x |
| Test equipment recertification | § 3175.92(g) | x | x |
| Integration statement requirements | § 3175.93 | x | x |
| Volume determination | § 3175.94(a) | x | x |
| Atmospheric pressure | § 3175.94(b) | x | x |

VL=Very-low-volume FMP; L=Low-volume FMP.
* = Immediate assessment for non-compliance under § 3175.150.

**§ 3175.91 Installation and operation of mechanical recorders.**

(a) The connection between the pressure taps and the mechanical recorder must meet the following requirements:

(1) Gauge lines must:

(i) Have a nominal diameter of not less than ⅜-inch;

(ii) Be sloped upwards from the pressure taps at a minimum pitch of 1 inch per foot of length with no visible sag;

(iii) Have the same internal diameter along their entire length; and

(iv) Be no longer than 6 feet.

(2) Valves, including the valves in manifolds, must have a full-opening internal diameter of not less than ⅜-inch;

(3) There must not be any tees except for the static-pressure line; and

(4) There must be no connections to any other devices or more than one differential-pressure bellows and static-pressure element.

(b) The differential-pressure pen must record at a minimum reading of 10 percent of the differential-pressure-bellows range for the majority of the flowing period. This requirement does not apply to inverted charts.

(c) The flowing temperature of the gas must be continuously recorded and used in the volume calculations under § 3175.94(a)(1).

(d) The following information must be maintained at the FMP in a legible condition, in compliance with § 3170.50(g) of this part, and accessible to the AO at all times:

(1) Differential-pressure-bellows range;

(2) Static-pressure-element range;

(3) Temperature-element range;

(4) Relative density (specific gravity) of the gas;

(5) Static-pressure units of measure (psia or psig);

(6) Elevation of or atmospheric pressure at the FMP;

(7) Reference inside diameter of the meter tube;

(8) Primary device type;

(9) Orifice-bore or other primary-device dimensions necessary for device verification, Beta- or area-ratio determination, and gas-volume calculation;

(10) Make, model, and location of approved isolating flow conditioners, if used;

(11) Location of the downstream end of 19-tube-bundle flow straighteners, if used;

(12) Date of last primary-device inspection; and

(13) Date of last meter verification.

(e) The differential pressure, static pressure, and flowing temperature elements must be operated between the

lower- and upper-calibrated limits of the respective elements.

**§ 3175.92 Verification and calibration of mechanical recorders.**

(a) *Verification after installation or following repair.* (1) Before performing any verification of a mechanical recorder required in this part, the operator must perform a leak test. The verification must not proceed if leaks are present. The leak test must be conducted in a manner that will detect leaks in the following:

(i) All connections and fittings of the secondary device, including meter manifolds and verification equipment;

(ii) The isolation valves; and

(iii) The equalizer valves.

(2) The operator must adjust the time lag between the differential- and static-pressure pens, if necessary, to be 1/96 of the chart rotation period, measured at the chart hub. For example, the time lag is 15 minutes on a 24-hour test chart and 2 hours on an 8-day test chart.

(3) The meter's differential pen arc must be able to duplicate the test chart's time arc over the full range of the test chart, and must be adjusted, if necessary.

(4) The as-left values must be verified in the following sequence against a certified pressure device for the differential-pressure and static-pressure elements (if the static-pressure pen has been offset for atmospheric pressure, the static-pressure element range is in psia):

(i) Zero (vented to atmosphere);

(ii) 50 percent of element range;

(iii) 100 percent of element range;

(iv) 80 percent of element range;

(v) 20 percent of element range; and

(vi) Zero (vented to atmosphere).

(5) The following as-left temperatures must be verified by placing the temperature probe in a water bath with a certified test thermometer:

(i) Approximately 10 °F below the lowest expected flowing temperature;

(ii) Approximately 10 °F above the highest expected flowing temperature; and

(iii) At the expected average flowing temperature.

(6) If any of the readings required in paragraph (a)(4) or (5) of this section vary from the test device reading by more than the tolerances shown in Table 1 to paragraph (a)(6), the operator must replace and verify the element for which readings were outside the applicable tolerances before returning the meter to service.

TABLE 1 TO PARAGRAPH (a)(6): MECHANICAL RECORDER TOLERANCES

| Element | Allowable error |
|---|---|
| Differential Pressure ..... | ±0.5% |
| Static Pressure ..... | ±1.0% |
| Temperature ..... | ±2 °F |

(7) If the static-pressure pen is offset for atmospheric pressure:

(i) The atmospheric pressure must be calculated under Appendix A to this subpart; and

(ii) The pen must be offset prior to obtaining the as-left verification values required in paragraph (a)(4) of this section.

(b) *Routine verification frequency.* (1) The differential pressure bellows, static pressure element, and temperature element must be verified in accordance with the requirements of paragraph (c) of this section at the frequency specified (in months) in Table 1 to § 3175.90; and

(2) The time between any two verifications must not exceed the time frames shown in Appendix B of this subpart; or

(3) If an FMP is in non-flowing status at the time that a routine verification is due, a routine verification must be conducted within 15 days after flow is re-initiated. For the purpose of this section, non-flowing status means no flow goes through the FMP for at least 3 months due to seasonal outages or long-term maintenance or repair issues. Non-flowing status does not apply to meters at FMPs that flow intermittently on a daily or weekly basis.

(c) *Routine verification procedures.* (1) Before performing any verification required in this part, the operator must perform a leak test in the manner required under paragraph (a)(1) of this section.

(2) No adjustments to the pens or linkages may be made until an as-found verification is obtained. If the static pen has been offset for atmospheric pressure, the static pen must not be reset to zero until the as-found verification is obtained.

(3) The operator must obtain the as-found values of differential and static pressure against a certified pressure device at the readings listed in paragraph (a)(4) of this section, with the following additional requirements:

(i) If there is sufficient data on site to determine the point at which the differential and static pens normally operate, the operator must also obtain an as-found value at those points;

(ii) If there is not sufficient data on site to determine the points at which the differential and static pens normally operate, the operator must also obtain as-found values at 5 percent of the element range and 10 percent of the element range; and

(iii) If the static-pressure pen has been offset for atmospheric pressure, the static-pressure element range is in units of psia.

(4) The as-found value for temperature must be taken using a certified test thermometer placed in a test thermometer well if there is flow through the meter and the meter tube is equipped with a test thermometer well. If there is no flow through the meter or if the meter is not equipped with a test thermometer well, the temperature probe must be verified by placing it along with a test thermometer in an insulated water bath.

(5) The element undergoing verification must be calibrated according to manufacturer specifications if any of the as-found values determined under paragraph (c)(3) or (4) of this section are not within the tolerances shown in Table 1 to paragraph (a)(6) of this section, when compared to the values applied by the test equipment.

(6) The operator must adjust the time lag between the differential- and static-pressure pens, if necessary, to be 1/96 of the chart rotation period, measured at the chart hub. For example, the time lag is 15 minutes on a 24-hour test chart and 2 hours on an 8-day test chart.

(7) The meter's differential pen arc must be able to duplicate the test chart's time arc over the full range of the test chart, and must be adjusted, if necessary.

(8) If any adjustment to the meter was made, the operator must perform an as-left verification on each element adjusted using the procedures in paragraphs (c)(3) and (4) of this section.

(9) If, after an as-left verification, any of the readings required in paragraph (c)(3) or (4) of this section vary by more than the tolerances shown in Table 1 to paragraph (a)(6) of this section when compared with the test-device reading, any element which has readings that are outside of the applicable tolerances must be replaced and verified under this section before the operator returns the meter to service.

(10) If the static-pressure pen is offset for atmospheric pressure:

(i) The atmospheric pressure must be calculated under appendix A to this subpart; and

(ii) The pen must be offset prior to obtaining the as-left verification values required in paragraph (c)(3) of this section.

(d) *Documentation of verification.* The operator must retain documentation of each verification, as required under

§ 3170.50(g) of this part, and submit it to the BLM upon request. This documentation must include:

(1) The time and date of the verification and the prior verification date;

(2) Primary-device data (reference inside diameter of the meter tube and differential-device size and Beta or area ratio) if the orifice plate is pulled and inspected;

(3) The type and location of taps (flange or pipe, upstream or downstream static tap);

(4) Atmospheric pressure used to offset the static-pressure pen, if applicable;

(5) Mechanical recorder data (make, model, and differential pressure, static pressure, and temperature element ranges);

(6) The normal operating points for differential pressure, static pressure, and flowing temperature;

(7) Verification points (as-found and applied) for each element;

(8) Verification points (as-left and applied) for each element, if a calibration was performed;

(9) Names, contact information, and affiliations of the person performing the verification and any witness, if applicable; and

(10) Remarks, if any.

(e) *Notification of verification.* (1) For verifications performed after installation or following repair, the operator must notify the AO at least 1 business day before conducting the verifications;

(2) For routine verifications, the operator must notify the AO at least 72 hours before conducting the verification or submit a monthly or quarterly verification schedule to the AO in advance that identifies the FMPs that will be verified during that month or quarter.

(f) *Volume correction.* If, during the verification, the combined errors in as-found differential pressure, static pressure, and flowing temperature taken at the normal operating points tested result in a flow-rate error greater than 2 percent and 2 Mcf/day, the volumes reported on the OGOR and on royalty reports submitted to ONRR must be corrected beginning with the date that the inaccuracy occurred. If that date is unknown, the volumes must be corrected beginning with the production month that includes the date that is halfway between the date of the last verification and the date of the current verification. For example: Meter verification determined that the meter was reading 4 Mcf/day high at the normal operating points. The average flow rate measured by the meter is 90 Mcf/day, yielding an error of 4.4 percent. There is no indication of when the inaccuracy occurred. The date of the current verification was Dec 15, 2015. The previous verification was conducted on June 15, 2015. The royalty volumes reported on OGOR B that were based on this meter must be corrected for the 4 Mcf/day error back to September 15, 2015.

(g) *Test equipment recertification.* Test equipment used to verify or calibrate elements at an FMP must be certified at least every 2 years. Documentation of the recertification must be on-site during all verifications and must show:

(1) Test equipment serial number, make, and model;

(2) The date on which the recertification took place;

(3) The test equipment measurement range; and

(4) The uncertainty determined or verified as part of the recertification.

**§ 3175.93 Integration statements.**

An unedited integration statement must be retained and made available to the BLM upon request. The integration statement must contain the following information:

(a) The information required in § 3170.50(g) of this part;

(b) The name of the company performing the integration;

(c) The month and year for which the integration statement applies;

(d) Reference inside diameter of the meter tube (inches);

(e) The following primary device information, as applicable:

(1) Orifice bore diameter (inches); or

(2) Beta or area ratio, discharge coefficient, and other information necessary to calculate the flow rate;

(f) Relative density (specific gravity);

(g) $CO_2$ content (mole percent);

(h) Dinitrogen ($N_2$) content (mole percent);

(i) Heating value calculated under § 3175.125 (Btu/standard cubic feet);

(j) Atmospheric pressure or elevation at the FMP;

(k) Pressure base;

(l) Temperature base;

(m) Static-pressure tap location (upstream or downstream);

(n) Chart rotation (hours or days);

(o) Differential-pressure bellows range (inches of water);

(p) Static-pressure element range (psi); and

(q) For each chart or day integrated:

(1) The time and date on and time and date off;

(2) Average differential pressure (inches of water);

(3) Average static pressure;

(4) Static-pressure units of measure (psia or psig);

(5) Average temperature (°F);

(6) Integrator counts or extension;

(7) Hours of flow; and

(8) Volume (Mcf).

**§ 3175.94 Volume determination.**

(a) The volume for each chart integrated must be determined as follows:

$$V = IMV \times IV$$

where:

V = reported volume, Mcf

IMV = integral multiplier value, as calculated under this section

IV = the integral value determined by the integration process (also known as the ''extension,'' ''integrated extension,'' and ''integrator count'')

(1) If the primary device is a flange-tapped orifice plate, a single IMV must be calculated for each chart or chart interval using the following equation:

$$IMV = 7709.61 \frac{C_d Y d^2}{\sqrt{1-\beta^4}} \sqrt{\frac{Z_b}{G_r Z_f T_f}}$$

where:

$C_d$ = discharge coefficient or flow coefficient, calculated under API 14.3.3 (2013) or AGA Report No. 3 (1985), Section 5 (both incorporated by reference, see § 3175.30)

β = Beta ratio.

Y = gas expansion factor, calculated under API 14.3.3 (2013), Subsection 5.6 or AGA Report No. 3 (1985), Section 5

d = orifice diameter, in inches

$Z_b$ = supercompressibility at base pressure and temperature

$G_r$ = relative density (specific gravity)

$Z_f$ = supercompressibility at flowing pressure and temperature

$T_f$ = average flowing temperature, in degrees Rankine

(2) For other types of primary devices, the IMV must be calculated using the equations and procedures recommended by the PMT and approved by the BLM, specific to the make, model, size, and area ratio of the primary device being used.

(3) Variables that are functions of differential pressure, static pressure, or flowing temperature (*e.g.,* $C_d$, Y, $Z_f$) must use the average values of differential pressure, static pressure, and flowing temperature as determined from the integration statement and reported on the integration statement for the chart or chart interval integrated. The flowing temperature must be the average flowing temperature reported on the integration statement for the chart or chart interval being integrated.

(b) Atmospheric pressure used to convert static pressure in psig to static pressure in psia must be determined under appendix A to this subpart.

**§ 3175.100 Electronic gas measurement (secondary and tertiary device).**

Except as provided in § 3175.50, the standards and requirements in this section apply to all EGM systems used at FMPs. (Note: Table 1 to this section lists the standards in this subpart and the API standards that the operator must follow to install and maintain EGM systems. A requirement applies when a column is marked with an ''x'' or a number.)

TABLE 1 TO § 3175.100—STANDARDS FOR ELECTRONIC GAS MEASUREMENT SYSTEMS

| Subject | Reference (API standards incorporated by reference, see § 3175.30) | VL | L | H | VH |
|---|---|---|---|---|---|
| EGM system commissioning | API 21.1, Subsection 7.3 | n/a | x | x | x |
| Access and data security | API 21.1, Section 9 | x | x | x | x |
| No-flow cutoff | API 21.1, Subsection 4.4.5 | x | x | x | x |
| Manifolds and gauge lines | § 3175.101(a) | n/a | x | x | x |
| Display requirements | § 3175.101(b) | x | x | x | x |
| On-site information | § 3175.101(c) | x | x | x | x |
| Operating within the calibrated limits | § 3175.101(d) | n/a | x | x | x |
| Flowing-temperature measurement | § 3175.101(e) | n/a | x | x | x |
| Verification after installation or following repair * | § 3175.102(a) | x | x | x | x |
| Routine verification frequency, in months * | § 3175.102(b) | 12 | 6 | 6 | 6 |
| Routine verification procedures | § 3175.102(c) | x | x | x | x |
| Redundancy verification | § 3175.102(d) | x | x | x | x |
| Documentation of verification | § 3175.102(e) | x | x | x | x |
| Notification of verification | § 3175.102(f) | x | x | x | x |
| Volume correction | § 3175.102(g) | n/a | x | x | x |
| Test-equipment requirements | § 3175.102(h) | x | x | x | x |
| Flow-rate calculation ** | § 3175.103(a) | x | x | x | x |
| Atmospheric pressure | § 3175.103(b) | x | x | x | x |
| Volume calculation | § 3175.103(c) | x | x | x | x |
| QTR requirements | § 3175.104(a) | x | x | x | x |
| Configuration log requirements | § 3175.104(b) | x | x | x | x |
| Event log | § 3175.104(c) | x | x | x | x |
| Alarm log | § 3175.104(d) | x | x | x | x |
| Accounting systems | § 3175.104(e) | x | x | x | x |

VL=Very-low-volume FMP; L=Low-volume FMP; H=High-volume FMP; VH=Very-high-volume FMP.
* = Immediate assessment for non-compliance under § 3175.150.
** = Applies to all high- and very-high-volume FMPs and FMPs installed at low- and very-low-volume FMPs after [EFFECTIVE DATE OF FINAL RULE]. See § 3175.50 for requirements pertaining to FMPs installed at low- and very-low-volume FMPs before EFFECTIVE DATE OF FINAL RULE].

**§ 3175.101 Installation and operation of electronic gas measurement systems.**

(a) The connection between the pressure taps and the secondary device must meet the following requirements:

(1) If gauge lines are used, they must:

(i) Have a nominal diameter of not less than ⅜-inch;

(ii) Be sloped upwards from the pressure taps at a minimum pitch of 1 inch per foot of length with no visible sag;

(iii) Have the same internal diameter along their entire length; and

(iv) Be no longer than 6 feet.

(2) Valves, including the valves in manifolds, must have a full-opening internal diameter of not less than ⅜-inch;

(3) There must not be any tees, except for the static-pressure line; and

(4) There must be no connections to any other devices or more than one differential pressure and static-pressure transducer. If the operator is employing redundancy verification, two differential pressure and two static-pressure transducers may be connected.

(b) Each FMP must include a display, which must:

(1) Be readable without the need for data-collection units, laptop computers, a password, or any special equipment;

(2) Be on site and in a location that is accessible to the AO;

(3) Include the units of measure for each required variable;

(4) For high- and very-high volume FMPs, display the software version;

(5) Display the previous-day's volume, as well as the following variables consecutively:

(i) Current flowing static pressure with units (psia or psig);

(ii) Current differential pressure (inches of water);

(iii) Current flowing temperature (°F); and

(iv) Current flow rate (Mcf/day or scf/day); and

(6) Either display or, at the request of the AO, provide an hourly or daily QTR (see § 3175.104(a)) no more than 31 days old showing the following information:

(i) Previous-period (for this section, previous period means at least 1 day prior, but no longer than 1 month prior) average differential pressure (inches of water);

(ii) Previous-period average static pressure with units (psia or psig); and

(iii) Previous-period average flowing temperature (°F);

(c) The following information must be maintained at the FMP in a legible condition, in compliance with § 3170.50(g) of this part, and accessible to the AO at all times:

(1) The unique meter identification number;

(2) Relative density (specific gravity);

(3) Elevation of or the atmospheric pressure at the FMP;

(4) Primary device information, such as orifice bore diameter (inches) or Beta or area ratio and discharge coefficient, as applicable;

(5) Reference inside diameter of the meter tube;

(6) Make, model, and location of approved isolating flow conditioners, if used;

(7) Location of the downstream end of 19-tube-bundle flow straighteners, if used;

(8) For self-contained EGM systems, make and model number of the system;

(9) For component-type EGM systems, make and model number of each transducer and the flow computer;

(10) URL and upper calibrated limit for each transducer;

(11) Location of the static-pressure tap (upstream or downstream);

(12) Last orifice plate or other BLM-approved primary-device inspection date;

(13) Last meter-tube inspection date; and

(14) Last secondary device verification date.

(d) The differential pressure, static pressure, and flowing temperature transducers must be operated between the lower and upper calibrated limits of the transducer. The BLM may approve the differential pressure to exceed the upper calibrated limit of the differential-pressure transducer for brief periods in plunger lift operations; however, the differential pressure may not exceed the URL.

(e) The flowing temperature of the gas must be continuously measured and used in the flow-rate calculations under API 21.1, Section 4 (incorporated by reference, see § 3175.30).

**§ 3175.102 Verification and calibration of electronic gas measurement systems.**

(a) *Transducer verification and calibration after installation or repair.* (1) Before performing any verification required in this section, the operator must perform a leak test in the manner prescribed in § 3175.92(a)(1).

(2) The operator must verify the points listed in API 21.1, Subsection 7.3.3 (incorporated by reference, see § 3175.30), by comparing the values from the certified test device with the values used by the flow computer to calculate flow rate. If any of these as-left readings vary from the test equipment reading by more than the tolerance determined by API 21.1, Subsection 8.2.2.2, Equation 24, then that transducer must be replaced and the new transducer must be tested under this paragraph.

(3) For absolute static-pressure transducers, the value of atmospheric pressure used when the transducer is vented to atmosphere must be calculated under Appendix A to this subpart, measured by a NIST-certified barometer with a stated accuracy of ±0.06 psi (±4 millibars) or better, or obtained from an absolute-pressure calibration device.

(4) Before putting a meter into service, the differential-pressure transducer must be tested at zero with full working pressure applied to both sides of the transducer. If the absolute value of the transducer reading is greater than the reference accuracy of the transducer, expressed in inches of water column, the transducer must be re-zeroed.

(b) *Routine verification frequency.* (1) If redundancy verification under paragraph (d) of this section is not used:

(i) The differential pressure, static pressure, and temperature transducers must be verified under the requirements of paragraph (c) of this section at the frequency specified in Table 1 to § 3175.100, in months; and

(ii) The time between any two verifications must not exceed the time frames shown in appendix B of this subpart; or

(iii) If an FMP is in non-flowing status at the time that a routine verification is due, a routine verification must be conducted within 15 days after flow is re-initiated. For the purpose of this section, non-flowing status means no flow goes through the FMP for at least 6 months due to seasonal outages or long-term maintenance or repair issues. Non-flowing status does not apply to meters at FMPs that flow intermittently on a daily or weekly basis.

(2) If redundancy verification under paragraph (d) of this section is used, the differential pressure, static pressure, and temperature transducers must be verified under the requirements of paragraph (d) of this section. In addition, the transducers must be verified under the requirements of paragraph (c) of this section at least annually.

(c) *Routine verification procedures.* Verifications must be performed according to API 21.1, Subsection 8.2 (incorporated by reference, see § 3175.30), with the following exceptions, additions, and clarifications:

(1) Before performing any verification required under this section, the operator must perform a leak test consistent with § 3175.92(a)(1).

(2) An as-found verification for differential pressure, static pressure and temperature must be conducted at the normal operating point of each transducer.

(i) The normal operating point is the mean value taken over a previous time period not less than 1 day or greater than 1 month. Acceptable mean values include means weighted based on flow time and flow rate.

(ii) For differential and static-pressure transducers, the pressure applied to the transducer for this verification must be within five percentage points of the normal operating point. For example, if the normal operating point for differential pressure is 17 percent of the upper calibrated limit, the normal point verification pressure must be between 12 percent and 22 percent of the upper calibrated limit.

(iii) For the temperature transducer, the water bath or test thermometer well must be within 20 °F of the normal operating point for temperature.

(3) If a transducer is calibrated, the as-left verification must include the normal operating point of that transducer, as defined in paragraph (c)(2) of this section.

(4) The as-found values for differential pressure obtained with the low side vented to atmospheric pressure must be corrected to working-pressure values using API 21.1, Annex H, Equation H.1 (incorporated by reference, see § 3175.30).

(5) The verification tolerance for differential and static pressure is defined by API 21.1, Subsection 8.2.2.2, Equation 24 (incorporated by reference, see § 3175.30). The verification tolerance for temperature is equivalent to the uncertainty of the temperature transmitter or 0.5 °F, whichever is greater.

(6) All required verification points must be within the verification tolerance before returning the meter to service.

(7) Before putting a meter into service, the differential-pressure transducer must be tested at zero with full working pressure applied to both sides of the transducer. If the absolute value of the transducer reading is greater than the reference accuracy of the transducer, expressed in inches of water column, the transducer must be re-zeroed.

(d) *Redundancy verification procedures.* Redundancy verifications must be performed as required under API 21.1, Subsection 8.2 (incorporated by reference, see § 3175.30), with the following exceptions, additions, and clarifications:

(1) The operator must identify which set of transducers is used for reporting on the OGOR (the primary transducers) and which set of transducers is used as a check (the check set of transducers);

(2) For every calendar month, the operator must compare the flow-time linear averages of differential pressure, static pressure, and temperature readings from the primary transducers with those from the check transducers;

(3) If for any transducer the difference between the averages exceeds the tolerance defined by the following equation:

$$Tolerance = \sqrt{A_p^2 + A_c^2}$$

Where:

$A_p$ is the reference accuracy of the primary transducer and

$A_c$ is the reference accuracy of the check transducer.

(4) The operator must verify both the primary and check transducer under paragraph (c) of this section within the first 5 days of the month following the month in which the redundancy verification was performed. For example, if the redundancy verification for March reveals that the difference in the flow-time linear averages of differential pressure exceeded the verification tolerance, both the primary and check differential-pressure transducers must be verified under paragraph (c) of this section by April 5th.

(e) *Documentation requirements.* The operator must retain documentation of each verification for the period required under § 3170.50 of this part, including calibration data for transducers that were replaced, and submit it to the BLM upon request.

(1) For routine verifications, this documentation must include:

(i) The information required in § 3170.50(g) of this part;

(ii) The time and date of the verification and the last verification date;

(iii) Primary device data (reference inside diameter of the meter tube and orifice plate or differential-device size, Beta or area ratio);

(iv) The type and location of taps (flange or pipe, upstream or downstream static tap);

(v) The flow computer make and model;

(vi) The make and model number for each transducer, for component-type EGM systems;

(vii) Transducer data (make, model, differential, static, temperature URL, and upper calibrated limit);

(viii) The normal operating points for differential pressure, static pressure, and flowing temperature;

(ix) Atmospheric pressure;

(x) Verification points (as-found and applied) for each transducer;

(xi) Verification points (as-left and applied) for each transducer, if calibration was performed;

(xii) The differential-device inspection date and condition (*e.g.,* clean, sharp edge, or surface condition);

(xiii) Verification equipment make, model, range, accuracy, and last certification date;

(xiv) The name, contact information, and affiliation of the person performing the verification and any witness, if applicable; and

(xv) Remarks, if any.

(2) For redundancy verification checks, this documentation must include;

(i) The information required in § 3170.50(g) of this part;

(ii) The month and year for which the redundancy check applies;

(iii) The makes, models, upper range limits, and upper calibrated limits of the primary set of transducers;

(iv) The makes, models, upper range limits, and upper calibrated limits of the check set of transducers;

(v) The information required in API 21.1, Annex I (incorporated by reference, see § 3175.30);

(vii) The tolerance for differential pressure, static pressure, and temperature as calculated under paragraph (d)(2) of this section; and

(viii) Whether or not each transducer required verification under paragraph (c) of this section.

(f) *Notification of verification.* (1) For verifications performed after installation or following repair, the operator must notify the AO at least 1 business day before conducting the verifications;

(2) For routine verifications, the operator must notify the AO at least 72 hours before conducting the verification or submit a monthly or quarterly verification schedule to the AO in advance that identifies the FMPs that will be verified during that month or quarter.

(g) *Amended reports.* If, during the verification, the combined errors in as-found differential pressure, static pressure, and flowing temperature taken at the normal operating points tested result in a flow-rate error greater than 2 percent and 2 Mcf/day, the volumes reported on the OGOR and on royalty reports submitted to ONRR must be corrected beginning with the date that the inaccuracy occurred. If that date is unknown, the volumes must be corrected beginning with the production month that includes the date that is half-way between the date of the last verification and the date of the present verification. See the example in § 3175.92(f).

(h) *Test equipment requirements.* (1) Test equipment used to verify or calibrate transducers at an FMP must be certified at least every 2 years. Documentation of the certification must be on site and made available to the AO during all verifications and must show:

(i) The test equipment serial number, make, and model;

(ii) The date on which the recertification took place;

(iii) The range of the test equipment; and

(iv) The uncertainty determined or verified as part of the recertification.

(2) Test equipment used to verify or calibrate transducers at an FMP must meet the following accuracy standards:

(i) The accuracy of the test equipment, stated in actual units of measure, must be no greater than 0.5 times the reference accuracy of the transducer being verified, also stated in actual units of measure; or

(ii) The equipment must have a stated accuracy of at least 0.10 percent of the upper calibrated limit of the transducer being verified.

**§ 3175.103 Flow rate, volume, and average value calculation.**

(a) The flow rate must be calculated as follows:

(1) For flange-tapped orifice plates, the flow rate must be calculated under:

(i) API 14.3.3 (2013), Section 4 and Section 5 (incorporated by reference, see § 3175.30); and

(ii) AGA Report No. 8 Part 1 or Part 2 (both incorporated by reference, see § 3175.30), for supercompressibility.

(2) For primary devices other than flange-tapped orifice plates, for which there are no industry standards, the flow rate must be calculated under the equations and procedures recommended by the PMT and approved by the BLM, specific to the make, model, size, and area ratio of the primary device used.

(b) Atmospheric pressure used to convert static pressure in psig to static pressure in psia must be determined using appendix A of this subpart.

(c) Hourly and daily gas volumes, average values of the live input variables, flow time, and integral value or average extension as required under § 3175.104 must be determined under API 21.1, Section 4 and Annex B (incorporated by reference, see § 3175.30).

**§ 3175.104 Logs and records.**

(a) The operator must retain, and submit to the BLM upon request, the original, unaltered, unprocessed, and unedited daily and hourly QTRs, which must contain the information identified in API 21.1, Subsection 5.2 (incorporated by reference, see § 3175.30), with the following additions and clarifications:

(1) The information required in § 3170.50(g) of this part;

(2) The volume, flow time, and integral value or average extension must be reported to at least 5 significant digits. The average differential pressure, static pressure, and temperature as calculated in § 3175.103(c), must be reported to at least 3 significant digits; and

(3) A statement of whether the operator has submitted the integral value or average extension.

(b) The operator must retain, and submit to the BLM upon request, the

original, unaltered, unprocessed, and unedited configuration log, which must contain the information specified in API 21.1, Subsection 5.4 (including the flow-computer snapshot report in Subsection 5.4.2), and Annex G (incorporated by reference, see § 3175.30), with the following additions and clarifications:

(1) The information required in § 3170.50(g) of this part;

(2) Software/firmware identifiers under API 21.1, Subsection 5.3 (incorporated by reference, see § 3175.30);

(3) For very-low-volume FMPs only, the fixed temperature, if not continuously measured (°F); and

(4) The static-pressure tap location (upstream or downstream);

(c) The operator must retain, and submit to the BLM upon request, the original, unaltered, unprocessed, and unedited event log. The event log must comply with API 21.1, Subsection 5.5 (incorporated by reference, see § 3175.30), with the following additions and clarifications: The event log must have sufficient capacity and must be retrieved and stored at intervals frequent enough to maintain a continuous record of events as required under § 3170.50 of this part, or the life of the FMP, whichever is shorter.

(d) The operator must retain an alarm log and provide it to the BLM upon request. The alarm log must comply with API 21.1, Subsection 5.6 (incorporated by reference, see § 3175.30).

(e) Records may only be submitted from measurement data system names and versions and flow computer makes and models that have been approved by the BLM (see § 3175.41).

**§ 3175.110 Gas sampling and analysis.**

The standards and requirements in this section apply to all gas sampling and analyses. (Note: Table 1 to this section lists the standards in this subpart and the API standards that the operator must follow to take a gas sample, analyze the gas sample, and report the findings of the gas analysis. A requirement applies when a column is marked with an ''x'' or a number.)

TABLE 1 TO § 3175.110: GAS SAMPLING AND ANALYSIS

| Subject | Reference | VL | L | H | VH |
|---|---|---|---|---|---|
| Methods of sampling | § 3175.111(a) | x | x | x | x |
| Heating requirements | § 3175.111(b) | x | x | x | x |
| Samples taken from probes | § 3175.112(a) | n/a | x | x | x |
| Location of sample probe | § 3175.112(b) | n/a | x | x | x |
| Sample probe design and type | § 3175.112(c) | n/a | x | x | x |
| Sample tubing | § 3175.112(d) | n/a | x | x | x |
| Spot sample while flowing | § 3175.113(a) | x | x | x | x |
| Notification of spot samples | § 3175.113(b) | x | x | x | x |
| Sample cylinder requirements | § 3175.113(c) | x | x | x | x |
| Spot sampling using portable GCs | § 3175.113(d) | x | x | x | x |
| Allowable methods of spot sampling | § 3175.114(a) | x | x | x | x |
| Low pressure sampling | § 3175.114(b) | x | x | x | x |
| Spot sampling frequency, low- and very-low-volume FMPs (in months) *. | § 3175.115(a) | 12 | 6 | n/a | n/a |
| Initial spot sampling frequency, high- and very-high-volume FMPs (in months) *. | § 3175.115(a) | n/a | n/a | 3 | 1 |
| Adjustment of spot sampling frequencies, high- and very-high-volume FMPs. | § 3175.115(b) | n/a | n/a | x | x |
| Maximum time between samples | § 3175.115(c) | x | x | x | x |
| Installation of composite sampler or on-line GC | § 3175.115(d) | x | x | x | x |
| Removal of composite sampler or on-line GC | § 3175.115(e) | x | x | x | x |
| Composite sampling methods | § 3175.116 | x | x | x | x |
| On-line gas chromatographs | § 3175.117 | x | x | x | x |
| Gas chromatograph requirements | § 3175.118 | x | x | x | x |
| Minimum components to analyze | § 3175.119(a) | x | x | x | x |
| $C_{9+}$ analysis | § 3175.119(b) and (c) | n/a | n/a | x | x |
| Gas analysis report requirements | § 3175.120 | x | x | x | x |
| Effective date of spot and composite samples | § 3175.121 | x | x | x | x |

VL=Very-low-volume FMP; L=Low-volume FMP; H=High-volume FMP.
VH=Very-high-volume FMP.
* = Immediate assessment for non-compliance under § 3175.150.

**§ 3175.111 General sampling requirements.**

(a) Samples must be taken by one of the following methods:

(1) Spot sampling under §§ 3175.113 to 3175.115;

(2) Flow-proportional composite sampling under § 3175.116; or

(3) On-line gas chromatograph under § 3175.117.

(b) At all times during the sampling process, the minimum temperature of all gas sampling components must be the lesser of:

(1) The flowing temperature of the gas measured at the time of sampling; or

(2) 30 °F above the calculated hydrocarbon dew point of the gas.

**§ 3175.112 Sampling probe and tubing.**

(a) *Samples taken from probes.* All gas samples must be taken from a sample probe that complies with the requirements of paragraphs (b) and (c) of this section.

(b) *Location of sample probe.* (1) The sampling probe must be located as specified in § 3175.80(p).

(2) The sample probe must be exposed to the same ambient temperature as the primary device. The operator may accomplish this by physically locating the sample probe in the same ambient temperature conditions as the primary device (such as in a heated meter house) or by installing insulation and/or heat tracing along the entire meter run. If the operator chooses to use insulation to comply with this requirement, the AO may prescribe the quality of the insulation based on site-specific factors such as ambient temperature, flowing

temperature of the gas, composition of the gas, and location of the sample probe in relation to the orifice plate (*i.e.,* inside or outside of a meter house).

(c) *Sample probe design and type.* (1) Sample probes must be constructed from stainless steel.

(2) If a regulating type of sample probe is used, the pressure-regulating mechanism must be inside the pipe or maintained at a temperature of at least 30 °F above the hydrocarbon dew point of the gas.

(3) The sample probe length must be the shorter of:

(i) The length necessary to place the collection end of the probe in the center one-third of the pipe cross-section; or

(ii) The recommended length of the probe in Table 1 in API 14.1, Subsection 6.4 (incorporated by reference, see § 3175.30).

(4) The use of membranes, screens, or filters at any point in the sample probe is prohibited.

(d) *Sample tubing.* All components of the sampling system through or into which gas flows during the sampling process must be constructed of stainless steel or nylon 11. This includes, but is not limited to, the sample probe, the sample line including valves and nipples, and the sample cylinder.

**§ 3175.113 Spot samples—general requirements.**

(a) *Sampling while flowing.* (1) The FMP must be flowing when a sample is taken.

(2) If an FMP is in a non-flowing status at the time that a sample is due, a sample must be taken within 15 days after flow is re-initiated. Documentation of the non-flowing status of the FMP must be entered into GARVS as required under § 3175.120(f). For the purpose of this section, non-flowing status means no flow goes through the FMP for at least one month due to seasonal outages or long-term maintenance or repair issues. Non-flowing status does not apply to meters at FMPs that flow intermittently on a daily or weekly basis.

(b) *Notification of spot samples.* The operator must submit a monthly or quarterly schedule of spot samples to the AO in advance of taking samples that identifies the FMPs to be sampled during the month or quarter.

(c) *Sample cylinder requirements.* Sample cylinders must:

(1) Comply with API 14.1, Subsection 9.1 (incorporated by reference, see § 3175.30);

(2) Have a minimum capacity of 300 cubic centimeters; and

(3) Be cleaned before sampling in accordance with GPA 2166–17, Appendix A (incorporated by reference, see § 3175.30), or an equivalent method. The operator must maintain documentation of cleaning (see § 3170.50 of this part), have the documentation available on site during sampling, and provide it to the BLM upon request. Equivalent method(s) of cleaning must be approved by the BLM through the PMT.

(d) *Spot sampling using portable gas chromatographs.* (1) The use of sampling separators is prohibited.

(2) The sample port and inlet to the sample line must be purged using the gas being sampled before completing the connection between them.

(3) The portable GC must be operated, verified, and calibrated under § 3175.118.

(4) The documentation of verification or calibration required in § 3175.118(d) must be available for inspection by the BLM at the time of sampling.

(5) Regulator assembly must be heated and/or insulated in a manner to ensure they are maintained at least 30 °F above the hydrocarbon dew point during sampling.

(6) The regulator must be set to deliver the sample gas to the portable GC at the same pressure at which it was validated or calibrated.

(7) The first run at each location must not be used to determine the heating value.

(8) Vent the sample line through the sample valve at the chromatograph for a minimum of 2 minutes before sampling at each location. If the prior sample contained high $H_2S$, the sample system must be purged with ultra-high purity helium instead of sample gas before sampling.

**§ 3175.114 Spot samples—allowable methods.**

(a) Spot samples must be obtained using one of the following methods:

(1) *Purging—fill and empty method.* Samples taken using this method must comply with GPA 2166–17, Section 9.1 (incorporated by reference, see § 3175.30);

(2) *Helium ''pop'' method.* Samples taken using this method must comply with GPA 2166–17, Section 9.5 (incorporated by reference, see § 3175.30). The operator must maintain documentation demonstrating that the cylinder was evacuated and pre-charged before sampling and make the documentation available to the AO upon request;

(3) *Floating piston cylinder method.* Samples taken using this method must comply with GPA 2166–17, Sections 9.7.1 to 9.7.3 (incorporated by reference, see § 3175.30). The operator must maintain documentation of the seal material and type of lubricant used and make the documentation available to the AO upon request;

(4) *Portable gas chromatograph.* Samples taken using this method must comply with § 3175.118; or

(5) *Alternative methods.* Other methods approved by the BLM (through the PMT) and posted at *www.blm.gov.*

(b) If the operator uses either a purging—fill and empty method or a helium ''pop'' method, and if the flowing pressure at the sample port is less than or equal to 15 psig, the operator may also employ a vacuum-gathering system. Samples taken using a vacuum-gathering system must comply with API 14.1, Subsection 11.10 (incorporated by reference, see § 3175.30), and the samples must be obtained from the discharge of the vacuum pump.

**§ 3175.115 Spot samples—frequency.**

(a) Unless otherwise required under paragraph (b) of this section, spot samples for all FMPs must be taken and analyzed at the frequency (once during every period, stated in months) prescribed in Table 1 to § 3175.110.

(b) After the time frames listed in paragraph (b)(1) of this section, the BLM may change the required sampling frequency for high-volume and very-high-volume FMPs if the BLM determines that the sampling frequency required in Table 1 in § 3175.110 is not sufficient to achieve the heating value uncertainty levels required in § 3175.31(b).

(1) *Timeframes for implementation.* (i) For high-volume FMPs, the BLM may change the sampling frequency no sooner than 2 years after the FMP begins measuring gas or [DATE FOUR YEARS AFTER EFFECTIVE DATE OF FINAL RULE], whichever is later; and

(ii) For very-high-volume FMPs, the BLM may change the sampling frequency or require compliance with paragraph (b)(5) of this section no sooner than 1 year after the FMP begins measuring gas or [DATE THREE YEARS AFTER EFFECTIVE DATE OF FINAL RULE], whichever is later.

(2) *Calculations on sampling frequencies.* The BLM will calculate the new sampling frequency needed to achieve the heating value uncertainty levels required in § 3175.31(b). The BLM will base the sampling frequency calculation on the heating value variability. The BLM will notify the operator of the new sampling frequency.

(3) *Duration of adjusted sampling frequencies.* The new sampling frequency will remain in effect until the

heating value variability justifies a different frequency.

(4) *Adjusted spot-sampling frequency limitation.* The new sampling frequency will not be more frequent than once every 2 weeks nor less frequent than once every 6 months.

(c) The time between any two samples must not exceed the time frames shown in appendix B of this subpart.

(d) If a composite sampling system or an on-line GC is installed under § 3175.116 or § 3175.117, it must be installed and operational no more than 90 days after the due date of the next sample.

(e) The required sampling frequency for an FMP at which a composite sampling system or an on-line gas chromatograph is removed from service is prescribed in paragraph (a) of this section.

**§ 3175.116 Composite sampling methods.**

(a) Composite samplers must be flow-proportional.

(b) Samples must be collected using a positive-displacement pump.

(c) Sample cylinders must comply with § 3175.113(c) and must be sized to ensure the cylinder capacity is not exceeded within the normal collection frequency.

(d) All components of the sampling system must be heated to at least 30 °F above the HCDP at all times.

**§ 3175.117 On-line gas chromatographs.**

(a) On-line GCs must be installed, operated, and maintained in accordance with GPA 2166–17, Appendix D (incorporated by reference, see § 3175.30), and the manufacturer's specifications, instructions, and recommendations.

(b) The GC must comply with the verification and calibration requirements of § 3175.118. The results of all verifications must be submitted to the AO upon request.

(c) Upon request, the operator must submit to the AO the manufacturer's specifications and installation and operational recommendations.

**§ 3175.118 Gas chromatograph requirements.**

(a) All GCs must be installed, operated, and calibrated under GPA 2261–19 (incorporated by reference, see § 3175.30).

(b) Samples must be analyzed until the un-normalized sum of the mole percent of all gases analyzed is between 97 and 103 percent.

(c) A GC may not be used to analyze any sample from an FMP until the verification meets the standards of this paragraph (c).

(1) GCs must be verified under GPA 2261–19, Section 6 (incorporated by reference, see § 3175.30), not less than once every 7 days.

(2) All gases used for verification and calibration must meet the standards of GPA 2198–16, Sections 3 and 4 (incorporated by reference, see § 3175.30).

(3) All new gases used for verification and calibration must be authenticated prior to verification or calibration under the standards of GPA 2198–16, Section 6 (incorporated by reference, see § 3175.30).

(4) The gas used to calibrate a GC must be maintained under GPA 2198–16, Section 5 (incorporated by reference, see § 3175.30).

(5) If the composition of the gas used for verification as determined by the GC varies from the certified composition of the gas used for verification by more than the reproducibility values listed in GPA 2261–19, Section 10 (incorporated by reference, see § 3175.30), the GC must be calibrated under GPA 2261–19, Section 6 (incorporated by reference, see § 3175.30).

(6) If the GC is calibrated, it must be re-verified under paragraph (c)(5) of this section.

(d) The operator must retain documentation of the verifications for the period required under § 3170.50 of this part, and make it available to the BLM upon request. The documentation must include:

(1) The components analyzed;

(2) The response factor for each component;

(3) The peak area for each component;

(4) The mole percent of each component as determined by the GC;

(5) The mole percent of each component in the gas used for verification;

(6) The difference between the mole percents determined in paragraphs (d)(4) and (5) of this section, expressed in relative percent;

(7) Evidence that the gas used for verification and calibration:

(i) Meets the requirements of paragraph (c)(2) of this section, including a unique identification number of the calibration gas used, the name of the supplier of the calibration gas, and the certified list of the mole percent of each component in the calibration gas;

(ii) Was authenticated under paragraph (c)(3) of this section prior to verification or calibration, including the fidelity plots; and

(iii) Was maintained under paragraph (c)(4) of this section, including the fidelity plot made as part of the calibration run;

(8) The chromatograms generated during the verification process;

(9) The time and date the verification was performed; and

(10) The name and affiliation of the person performing the verification.

**§ 3175.119 Components to analyze.**

(a) The gas must be analyzed for the following components:

(1) Methane;

(2) Ethane;

(3) Propane;

(4) Iso Butane;

(5) Normal Butane;

(6) Pentanes;

(7)(i) Hexanes-plus ($C_6$+); or

(ii) Nonanes-plus ($C_9$+), hexanes, heptanes, and octanes;

(8) Carbon dioxide; and

(9) Nitrogen.

(b) When the concentration of $C_6$+ exceeds 1 mole percent, a $C_9$+ analysis must be conducted.

(c) In lieu of testing each sample for the components required under paragraph (b) of this section, the operator may periodically test for $C_9$+ and adjust the assumed $C_6$+ heating value to match the heating value of hexanes, heptanes, octanes, and $C_9$+ from the $C_9$+ analysis (see § 3175.126(a)(3)(ii)). The adjusted $C_6$+ heating value must be applied to the mole percent of $C_6$+ analyses until the next $C_9$+ analysis is done under paragraph (b) of this section. The minimum analysis frequency for the components listed in paragraph (b) of this section is as follows:

(1) For high-volume FMPs, once per year; and

(2) For very-high-volume FMPs, once every 6 months.

**§ 3175.120 Gas analysis report requirements.**

(a) The gas analysis report must contain the following information:

(1) The information required in § 3170.50(g) of this part;

(2) The date and time that the sample for spot samples was taken or, for composite samples, the date the cylinder was installed and the date the cylinder was removed;

(3) The date and time of the analysis;

(4) For spot samples, the effective date, if other than the date of sampling;

(5) For composite samples, the effective start and end date;

(6) The name of the laboratory where the analysis was performed, if applicable;

(7) The device used for analysis (*i.e.,* GC, calorimeter, or mass spectrometer);

(8) The make and model of analyzer;

(9) The date of last calibration or verification of the analyzer;

(10) The flowing temperature at the time of sampling;

(11) The flowing pressure at the time of sampling, including units of measure (psia or psig);

(12) The flow rate at the time of sampling;

(13) The ambient air temperature at the time of sampling;

(14) Whether or not heat trace or any other method of heating was used;

(15) The type of sample (*i.e.,* spot-cylinder, spot-portable GC, composite);

(16) The sampling method if spot-cylinder (*e.g.,* fill and empty, helium pop);

(17) A list of the components of the gas tested;

(18) The total un-normalized mole percent of the components tested;

(19) The normalized mole percent of each component tested, including a summation of those mole percents;

(20) The ideal heating value (Btu/scf);

(21) The real heating value (Btu/scf), dry basis;

(22) The hexanes-plus heating value (Btu/scf), if applicable;

(23) The pressure base and temperature base;

(24) The relative density; and

(25) The name of the company obtaining the gas sample.

(b) Components that are listed on the analysis report, but not tested, must be annotated as such.

(c) The heating value and relative density must be calculated under API 14.5 (incorporated by reference, see § 3175.30).

(d) The base supercompressibility must be calculated under AGA Report No. 8, Part 1 or Part 2 (incorporated by reference, see § 3175.30).

(e) The operator must submit all gas analysis reports to the BLM within 15 days of the due date for the sample as specified in § 3175.115.

(f) The operator must submit all gas analysis reports and other required information electronically through the GARVS. The BLM will consider granting a variance to the electronic-submission requirement only in cases where the operator demonstrates that it is a small business, as defined by the U.S. Small Business Administration, and does not have access to the internet.

**§ 3175.121 Effective date of a spot or composite gas sample.**

(a) Unless otherwise specified on the gas analysis report, the effective date of a spot sample is the date on which the sample was taken.

(b) The effective date of a spot gas sample may be no later than the first day of the production month following the operator's receipt of the laboratory analysis of the sample.

(c) Unless otherwise specified on the gas analysis report, the effective date of a composite sample is the first of the month in which the sample was removed.

(d) The provisions of this section apply only to OGORs, QTRs, and gas sample reports generated after [EFFECTIVE DATE OF FINAL RULE].

**§ 3175.125 Calculation of heating value and volume.**

(a) *Methodology.* The heating value of the gas sampled must be calculated as follows:

(1) Gross heating value is defined by API 14.5, Subsection 3.7 (incorporated by reference, see § 3175.30) and must be calculated under API 14.5, Subsection 7.1 (incorporated by reference, see § 3175.30); and

(2) Real heating value must be calculated by dividing the gross heating value of the gas calculated under paragraph (a)(1) of this section by the compressibility factor of the gas at 14.73 psia and 60 °F.

(b) *Average heating value determination.* (1) If a lease, unit PA, or CA has more than one FMP without an FMP number, the average heating value for the lease, unit PA, or CA for FMPs without an FMP number for a reporting month must be the volume-weighted average of heating values, calculated as follows:

$$\overline{HV} = \frac{\sum_{i=1}^{i=n}\left(HV_i \times V_i\right)}{\sum_{i=1}^{i=n} V_i}$$

where:

$\overline{HV}$ = the average heating value for the lease, unit PA, or CA, for the reporting month, in Btu/scf

$HV_i$ = the heating value for $FMP_i$, during the reporting month (see § 3175.120(b)(2) if an FMP has multiple heating values during the reporting month), in Btu/scf

$V_i$ = the volume measured by FMPi, during the reporting month, in Btu/scf

Subscript i represents each FMP for the lease, unit PA, or CA

n = the number of FMPs for the lease, unit PA, or CA

(2) If the effective date of a heating value for an FMP is other than the first day of the reporting month, the average heating value of the FMP must be the volume-weighted average of heating values, determined as follows:

$$HV_i = \frac{\sum_{j=1}^{j=m}\left(HV_{i,j} \times V_{i,j}\right)}{\sum_{j=1}^{j=m} V_{i,j}}$$

where:

$HV_i$ = the heating value for $FMP_i$, in Btu/scf

$HV_{i,j}$ = the heating value for $FMP_i$, for partial month j, in Btu/scf

$V_{i,j}$ = the volume measured by $FMP_i$, for partial month j, in Btu/scf

Subscript i represents each FMP for the lease, unit PA, or CA

Subscript j represents a partial month for which heating value $HV_{i,j}$ is effective

m = the number of different heating values in a reporting month for an FMP

(c) *Volume calculation methodology.* The volume must be determined under §§ 3175.94 (mechanical recorders) or 3175.103(c) (EGM systems).

**§ 3175.126 Reporting of heating value and volume.**

(a) The gross heating value and real heating value, or average gross heating value and average real heating value, as applicable, derived from all samples and analyses must be reported on the OGOR in units of Btu/scf under the following conditions:

(1) Containing no water vapor (''dry''), unless the water vapor content has been determined through actual on-site measurement, included in heating value calculations, and reported on the gas analysis report. The heating value may not be reported on the basis of an assumed water-vapor content. Acceptable methods of measuring water vapor are:

(i) Makes and models of chilled mirrors approved by the BLM and placed on the list of approved equipment and methods maintained at *www.blm.gov;*

(ii) Automated chilled mirrors approved by the BLM and placed on the list of approved equipment and methods maintained at *www.blm.gov;* and

(iii) Other equipment and methods approved by the BLM and placed on the list of approved equipment and methods maintained at *www.blm.gov;*

(2) Adjusted to a pressure of 14.73 psia and a temperature of 60 °F;

(3) For samples analyzed under § 3175.119(a), and notwithstanding any provision of a contract between the operator and a purchaser or transporter, the composition of hexanes-plus must have a heating value not less than:

(i) 5129 Btu/scf (equivalent heating value of 60 percent hexanes, 30 percent heptanes, and 10 percent octanes.); or

(ii) The heating value of the $C_9$+ composition determined under § 3175.119(c); and

(4) For samples analyzed under § 3175.119(b), and notwithstanding any provision of a contract between the operator and purchaser or transporter, the composition of $C_9$+ must have a heating value not less than 6,996 Btu/scf.

(b) The volume for royalty purposes must be reported on the OGOR in units of Mcf as follows:

(1) The volume must not be adjusted for water-vapor content or any other factors that are not included in the calculations required in § 3175.94 or § 3175.103; and

(2) The volume must match the monthly volume(s) shown in the unedited QTR(s) or integration statement(s) unless edits to the data are documented under paragraph (c) of this section.

(c) *Edits and adjustments to reported volume or heating value.* (1) If for any reason there are measurement errors stemming from an equipment malfunction that results in discrepancies to the calculated volume or heating value of the gas, the volume or heating value reported during the period in which the volume or heating value error persisted must be estimated.

(2) All edits made to the data before the submission of the OGOR must be documented and include verifiable justifications for the edits made. This documentation must be maintained under § 3170.50 of this part and must be submitted to the BLM upon request.

(3) All values on daily and hourly QTRs that have been changed or edited must be clearly identified and must be cross referenced to the justification required in paragraph (c)(2) of this section.

(4) The volumes reported on the OGOR must be corrected beginning with the date that the inaccuracy occurred. If that date is unknown, the volumes must be corrected beginning with the production month that includes the date that is half way between the date of the previous verification and the most recent verification date.

**§ 3175.130 Requirements for gas storage agreement measurement points (GSAMPs).**

Gas storage agreement measurement points must meet the requirements of this subpart subject to the following specifications and exemptions:

(a) A meter at a GSAMP is:

(1) Very-low volume if it measures 800 Mcf/day or less over the averaging period;

(2) Low volume if it measures more than 800Mcf/day and 4,700 Mcf/day or less over the averaging period; or

(3) High volume if it measures more than 4,700 Mcf/day over the averaging period.

(b) A GSAMP is exempt from the following sections of this subpart:

(1) Section 3175.110;

(2) Section 3175.80(p);

(3) Section 3175.120;

(4) Section 3175.121;

(5) Section 3175.125(a) and (b); and

(6) Section 3175.126.

**§ 3175.140 Temporary measurement.**

Measurement equipment at any temporary measurement facility must meet the requirements of this subpart with the following exceptions:

(a) Routine mechanical recorder verifications under § 3175.92(b) are not required;

(b) Routine EGM system verification under § 3175.102(b) are not required;

(c) Basic meter-tube inspections under § 3175.80(j) are not required; and

(d) Detailed meter-tube inspections under § 3175.80(k)(1) are not required.

**§ 3175.150 Immediate assessments.**

(a) Certain instances of noncompliance warrant the imposition of immediate assessments upon discovery. Imposition of any of these assessments does not preclude other appropriate enforcement actions.

(b) The BLM will issue the assessments for the violations listed as follows:

TABLE 1 TO § 3175.150—VIOLATIONS SUBJECT TO AN IMMEDIATE ASSESSMENT

| Violation: | Assessment amount per violation: |
|---|---|
| 1. New FMP orifice-plate inspections were not conducted as required by § 3175.80(e) | $1,000 |
| 2. Routine FMP orifice-plate inspections were not conducted as required by § 3175.80(f) | 1,000 |
| 3. Basic meter-tube inspections were not conducted as required by § 3175.80(j) | 1,000 |
| 4. Detailed meter-tube inspections were not conducted as required by § 3175.80(k) | 1,000 |
| 5. An initial EGM-system verification was not conducted as required by § 3175.102(a) | 1,000 |
| 6. Routine EGM-system verifications were not conducted as required by § 3175.102(b) | 1,000 |
| 7. Spot samples for low-volume and very-low-volume FMPs were not taken as required by § 3175.115(a) | 1,000 |
| 8. Spot samples for high- and very-high-volume FMPs were not taken as required by § 3175.115(a) and (b) | 1,000 |

BILLING CODE 4310–84–P

## Appendix A to Subpart 3175 – Table of Atmospheric Pressures

| Elevation (ft msl) | Atmos. Pressure (psi) | Elevation (ft msl) | Atmos. Pressure (psi) | Elevation (ft msl) | Atmos. Pressure (psi) |
|---|---|---|---|---|---|
| **0** | 14.70 | **4,000** | 12.70 | **8,000** | 10.92 |
| 100 | 14.64 | 4,100 | 12.65 | 8,100 | 10.88 |
| 200 | 14.59 | 4,200 | 12.60 | 8,200 | 10.84 |
| 300 | 14.54 | 4,300 | 12.56 | 8,300 | 10.80 |
| 400 | 14.49 | 4,400 | 12.51 | 8,400 | 10.76 |
| 500 | 14.43 | 4,500 | 12.46 | 8,500 | 10.72 |
| 600 | 14.38 | 4,600 | 12.42 | 8,600 | 10.68 |
| 700 | 14.33 | 4,700 | 12.37 | 8,700 | 10.63 |
| 800 | 14.28 | 4,800 | 12.32 | 8,800 | 10.59 |
| 900 | 14.23 | 4,900 | 12.28 | 8,900 | 10.55 |
| **1,000** | 14.17 | **5,000** | 12.23 | **9,000** | 10.51 |
| 1,100 | 14.12 | 5,100 | 12.19 | 9,100 | 10.47 |
| 1,200 | 14.07 | 5,200 | 12.14 | 9,200 | 10.43 |
| 1,300 | 14.02 | 5,300 | 12.10 | 9,300 | 10.39 |
| 1,400 | 13.97 | 5,400 | 12.05 | 9,400 | 10.35 |
| 1,500 | 13.92 | 5,500 | 12.01 | 9,500 | 10.31 |
| 1,600 | 13.87 | 5,600 | 11.96 | 9,600 | 10.27 |
| 1,700 | 13.82 | 5,700 | 11.92 | 9,700 | 10.23 |
| 1,800 | 13.77 | 5,800 | 11.87 | 9,800 | 10.19 |
| 1,900 | 13.72 | 5,900 | 11.83 | 9,900 | 10.15 |
| **2,000** | 13.67 | **6,000** | 11.78 | **10,000** | 10.12 |

| | | | | | |
|---|---|---|---|---|---|
| 2,100 | 13.62 | 6,100 | 11.74 | 10,100 | 10.08 |
| 2,200 | 13.57 | 6,200 | 11.69 | 10,200 | 10.04 |
| 2,300 | 13.52 | 6,300 | 11.65 | 10,300 | 10.00 |
| 2,400 | 13.47 | 6,400 | 11.61 | 10,400 | 9.96 |
| 2,500 | 13.42 | 6,500 | 11.56 | 10,500 | 9.92 |
| 2,600 | 13.37 | 6,600 | 11.52 | 10,600 | 9.88 |
| 2,700 | 13.32 | 6,700 | 11.48 | 10,700 | 9.84 |
| 2,800 | 13.27 | 6,800 | 11.43 | 10,800 | 9.81 |
| 2,900 | 13.22 | 6,900 | 11.39 | 10,900 | 9.77 |
| **3,000** | 13.17 | **7,000** | 11.35 | **11,000** | 9.73 |
| 3,100 | 13.13 | 7,100 | 11.30 | 11,100 | 9.69 |
| 3,200 | 13.08 | 7,200 | 11.26 | 11,200 | 9.65 |
| 3,300 | 13.03 | 7,300 | 11.22 | 11,300 | 9.62 |
| 3,400 | 12.98 | 7,400 | 11.18 | 11,400 | 9.58 |
| 3,500 | 12.93 | 7,500 | 11.13 | 11,500 | 9.54 |
| 3,600 | 12.89 | 7,600 | 11.09 | 11,600 | 9.50 |
| 3,700 | 12.84 | 7,700 | 11.05 | 11,700 | 9.47 |
| 3,800 | 12.79 | 7,800 | 11.01 | 11,800 | 9.43 |
| 3,900 | 12.74 | 7,900 | 10.97 | 11,900 | 9.39 |

ft msl = feet above mean sea level

Calculated as:

$$P_{atm} = 14.696 \text{ x } (1\text{-}0.00000686\,E)^{5.25577}$$

Where:

$P_{atm}$ is atmospheric pressure, psi

$E$ is meter elevation, feet above mean sea level

From: U.S. Standard Atmosphere, 1976, U.S.

Government Printing Office, Washington, D.C., 1976.

## APPENDIX B TO SUBPART 3175—MAXIMUM TIME BETWEEN REQUIRED ACTIONS

| If the required frequency is once every: | Then the maximum time between required actions (in days) is: |
|---|---|
| 2 weeks | 18 |
| Month | 45 |
| 2 months | 75 |
| 3 months | 105 |
| 6 months | 195 |
| 12 months | 395 |

[FR Doc. 2020–16393 Filed 9–2–20; 4:15 pm]

BILLING CODE 4310–84–C