AUTHENTICATED
U.S. GOVERNMENT
INFORMATION
GPO

FEDERAL REGISTER

Vol. 85 Friday,
No. 100 May 22, 2020

Pages 31035–31356

OFFICE OF THE FEDERAL REGISTER

The **FEDERAL REGISTER** (ISSN 0097–6326) is published daily, Monday through Friday, except official holidays, by the Office of the Federal Register, National Archives and Records Administration, under the Federal Register Act (44 U.S.C. Ch. 15) and the regulations of the Administrative Committee of the Federal Register (1 CFR Ch. I). The Superintendent of Documents, U.S. Government Publishing Office, is the exclusive distributor of the official edition. Periodicals postage is paid at Washington, DC.

The **FEDERAL REGISTER** provides a uniform system for making available to the public regulations and legal notices issued by Federal agencies. These include Presidential proclamations and Executive Orders, Federal agency documents having general applicability and legal effect, documents required to be published by act of Congress, and other Federal agency documents of public interest.

Documents are on file for public inspection in the Office of the Federal Register the day before they are published, unless the issuing agency requests earlier filing. For a list of documents currently on file for public inspection, see *www.federalregister.gov.*

The seal of the National Archives and Records Administration authenticates the Federal Register as the official serial publication established under the Federal Register Act. Under 44 U.S.C. 1507, the contents of the **Federal Register** shall be judicially noticed.

The **Federal Register** is published in paper and on 24x microfiche. It is also available online at no charge at *www.govinfo.gov*, a service of the U.S. Government Publishing Office.

The online edition of the **Federal Register** is issued under the authority of the Administrative Committee of the Federal Register as the official legal equivalent of the paper and microfiche editions (44 U.S.C. 4101 and 1 CFR 5.10). It is updated by 6:00 a.m. each day the **Federal Register** is published and includes both text and graphics from Volume 1, 1 (March 14, 1936) forward. For more information, contact the GPO Customer Contact Center, U.S. Government Publishing Office. Phone 202-512-1800 or 866-512-1800 (toll free). E-mail, *gpocusthelp.com.*

The annual subscription price for the **Federal Register** paper edition is $860 plus postage, or $929, for a combined **Federal Register, Federal Register** Index and List of CFR Sections Affected (LSA) subscription; the microfiche edition of the **Federal Register** including the **Federal Register** Index and LSA is $330, plus postage. Six month subscriptions are available for one-half the annual rate. The prevailing postal rates will be applied to orders according to the delivery method requested. The price of a single copy of the daily **Federal Register,** including postage, is based on the number of pages: $11 for an issue containing less than 200 pages; $22 for an issue containing 200 to 400 pages; and $33 for an issue containing more than 400 pages. Single issues of the microfiche edition may be purchased for $3 per copy, including postage. Remit check or money order, made payable to the Superintendent of Documents, or charge to your GPO Deposit Account, VISA, MasterCard, American Express, or Discover. Mail to: U.S. Government Publishing Office—New Orders, P.O. Box 979050, St. Louis, MO 63197-9000; or call toll free 1-866-512-1800, DC area 202-512-1800; or go to the U.S. Government Online Bookstore site, see *bookstore.gpo.gov.*

There are no restrictions on the republication of material appearing in the **Federal Register.**

How To Cite This Publication: Use the volume number and the page number. Example: 85 FR 12345.

Postmaster: Send address changes to the Superintendent of Documents, Federal Register, U.S. Government Publishing Office, Washington, DC 20402, along with the entire mailing label from the last issue received.

SUBSCRIPTIONS AND COPIES

PUBLIC

Subscriptions:

Paper or fiche	**202–512–1800**
Assistance with public subscriptions	**202–512–1806**

General online information **202–512–1530; 1–888–293–6498**

Single copies/back copies:

Paper or fiche	**202–512–1800**
Assistance with public single copies	**1–866–512–1800 (Toll-Free)**

FEDERAL AGENCIES

Subscriptions:

Assistance with Federal agency subscriptions:

Email	*FRSubscriptions@nara.gov*
Phone	**202–741–6000**

The Federal Register Printing Savings Act of 2017 (Pub. L. 115-120) placed restrictions on distribution of official printed copies of the daily **Federal Register** to members of Congress and Federal offices. Under this Act, the Director of the Government Publishing Office may not provide printed copies of the daily **Federal Register** unless a Member or other Federal office requests a specific issue or a subscription to the print edition. For more information on how to subscribe use the following website link: *https://www.gpo.gov/frsubs.*

Printed on recycled paper.

Contents

Federal Register

Vol. 85, No. 100

Friday, May 22, 2020

Administrative Office of United States Courts
NOTICES
Meetings:
Judicial Conference, 31135

Agriculture Department
See Animal and Plant Health Inspection Service
See Forest Service
See Rural Business-Cooperative Service
See Rural Utilities Service
PROPOSED RULES
Funding Availability:
Coronavirus Food Assistance Program Additional Commodities Request for Information, 31062–31065

Animal and Plant Health Inspection Service
NOTICES
Agency Information Collection Activities; Proposals, Submissions, and Approvals:
Conditions for Payment of Avian Influenza Indemnity Claims, 31136–31137
Environmental Monitoring, 31135–31136
Environmental Assessments; Availability, etc.:
Oral Rabies Vaccine Program, 31137–31138

Antitrust Division
NOTICES
Proposed Final Judgment and Competitive Impact Statement:
United States v. Novelis Inc., et al., 31212–31227

Civil Rights Commission
NOTICES
Meetings:
Utah Advisory Committee, 31141

Coast Guard
PROPOSED RULES
Special Local Regulation:
Ohio River, Louisville, KY, 31102–31104
Upper Potomac River, National Harbor, MD, 31099–31102

Commerce Department
See Economic Analysis Bureau
See International Trade Administration
See National Oceanic and Atmospheric Administration

Committee for Purchase From People Who Are Blind or Severely Disabled
NOTICES
Procurement List; Additions and Deletions, 31164–31165

Community Living Administration
NOTICES
Program Application Instructions:
Medicare Improvements for Patients and Providers Act Program Funds, 31189–31190

Drug Enforcement Administration
NOTICES
Bulk Manufacturer of Controlled Substances Application:
Noramco, Inc., 31227

Economic Analysis Bureau
RULES
International Services Surveys:
BE–180 Benchmark Survey of Financial Services Transactions between U.S. Financial Services Providers and Foreign Persons, 31050–31053

Education Department
NOTICES
Agency Information Collection Activities; Proposals, Submissions, and Approvals:
Annual Client Assistance Program Performance Report, 31165
Application for New Awards:
Expanding Opportunity Through Quality Charter Schools Program, 31165–31175

Energy Department
See Federal Energy Regulatory Commission
See Western Area Power Administration
PROPOSED RULES
Energy Conservation Program:
Test Procedures for Residential and Commercial Clothes Washers, 31065–31082

Environmental Protection Agency
RULES
National Emission Standards for Hazardous Air Pollutants:
Coal- and Oil-Fired Electric Utility Steam Generating Units—Reconsideration of Supplemental Finding and Residual Risk and Technology Review, 31286–31320
PROPOSED RULES
Air Quality State Implementation Plans; Approvals and Promulgations:
Arizona Air Plan Revisions, Hayden Area; Sulfur Dioxide Control Measures—Copper Smelters; Limited Approval, Limited Disapproval, 31113–31116
Arizona; Nonattainment Plan for the Hayden SO_2 Nonattainment Area; Partial Approval and Partial Disapproval, 31118–31124
Georgia, 31116–31117
Georgia: Emission Reduction Credits, 31112–31113
Pesticide Tolerance; Exemption:
Dipropylene Glycol and Triethylene Glycol, 31130–31133
Guidance:
Administrative Procedures for Issuance and Public Petitions, 31104–31111
Ocean Dumping:
Modification of an Ocean Dredged Material Disposal Site Offshore of Port Everglades, FL; Reopening of Comment Period, 31133–31134
Standards of Performance for New Residential Wood Heaters, New Residential Hydronic Heaters, and Forced-Air Furnaces, 31124–31130
NOTICES
Agency Information Collection Activities; Proposals, Submissions, and Approvals:
Confidentiality Rules (Renewal), 31185–31186
Reformulated Gasoline and Conventional Gasoline: Requirements for Refiners, Oxygenate Blenders, and Importers of Gasoline; Requirements for Parties in the Gasoline Distribution Network (Renewal), 31183

School Integrated Pest Management Awards Program (Renewal), 31186–31187
Draft Ambient Water Quality Criteria Recommendations for Lakes and Reservoirs of the Conterminous United States:
Information Supporting the Development of Numeric Nutrient Criteria, 31184–31185
Environmental Impact Statements; Availability, etc.:, 31182–31183
Release of Policy Assessment for the Ozone National Ambient Air Quality Standards, 31182

Federal Aviation Administration
RULES
Airworthiness Directives:
Airbus Helicopters, 31042–31046
The Boeing Company Airplanes, 31046–31049
Establishment of Class E Airspace:
Harlowton, MT, 31049–31050
PROPOSED RULES
Airworthiness Directives:
Airbus SAS Airplanes, 31083–31085

Federal Communications Commission
PROPOSED RULES
Petitions for Reconsideration of Action in Proceedings, 31134

Federal Emergency Management Agency
NOTICES
Agency Information Collection Activities; Proposals, Submissions, and Approvals:
Federal Assistance to Individuals and Households Program, 31196–31198
National Flood Insurance Program Policy Forms, 31202–31203
Major Disaster and Related Determinations:
Mississippi, 31201–31202
Kentucky, 31201
Mississippi, 31200–31201
South Carolina, 31198–31199
Tennessee, 31198
Washington, 31199–31200
Major Disaster Declaration:
Mississippi; Amendment No. 1, 31200
Mississippi; Amendment No. 2, 31199
Puerto Rico; Amendment No. 7, 31199

Federal Energy Regulatory Commission
NOTICES
Application:
Agate Energy Park, LLC, 31176–31177
Village of Gouverneur, NY; Project No. 14635–001, 31178
Combined Filings, 31175–31176
Environmental Assessments; Availability, etc.:
Texas Eastern Transmission, LP, 31179–31180
Request under Blanket Authorization:
National Fuel Gas Supply Corp., 31177

Federal Railroad Administration
NOTICES
Agency Information Collection Activities; Proposals, Submissions, and Approvals, 31281–31282

Federal Trade Commission
PROPOSED RULES
Health Breach Notification Rule, 31085–31087
NOTICES
Proposed Consent Agreement:
Miniclip S.A., 31187–31189

Fiscal Service
NOTICES
Agency Information Collection Activities; Proposals, Submissions, and Approvals:
Direct Deposit Sign-Up Form, 31282

Fish and Wildlife Service
NOTICES
Endangered and Threatened Species:
Recovery Permit Applications, 31207–31208
Environmental Impact Statements; Availability, etc.:
Joint Final Habitat Conservation Plan and Natural Community Conservation Plan; Placer County, CA, 31203–31204
Permit Application:
Foreign Endangered Species; Marine Mammals, 31204–31207

Food and Drug Administration
NOTICES
Agency Information Collection Activities; Proposals, Submissions, and Approvals, 31190–31191
Requests for Nominations:
Tobacco Products Scientific Advisory Committee, 31192

Foreign Assets Control Office
RULES
Zimbabwe Sanctions Regulations, 31060–31061

Forest Service
NOTICES
Meetings:
Black Hills National Forest Advisory Board, 31138
Collaborative Forest Restoration Program Technical Advisory Panel, 31138–31139

Health and Human Services Department
See Community Living Administration
See Food and Drug Administration
See National Institutes of Health

Homeland Security Department
See Coast Guard
See Federal Emergency Management Agency
See U.S. Customs and Border Protection

Interior Department
See Fish and Wildlife Service
See Land Management Bureau
See Reclamation Bureau

Internal Revenue Service
PROPOSED RULES
Rehabilitation Credit Allocated over a 5-Year Period, 31096–31099

International Trade Administration
NOTICES
Antidumping or Countervailing Duty Investigations, Orders, or Reviews:
Certain Aluminum Foil and Common Alloy Aluminum Sheet from the People's Republic of China, 31144–31145
Certain Glass Containers from the People's Republic of China, 31141–31144

International Trade Commission
NOTICES
Andean Trade Preference Act:
Impact on U.S. Industries and Consumers and on Drug Crop Eradication and Crop Substitution, 31209–31210
Complaint; Solicitation of Comments, 31210–31211
Investigations; Determinations, Modifications, and Rulings, etc.:
Certain Electronic Devices, Including Streaming Players, Televisions, Set Top Boxes, Remote Controllers, and Components Thereof, 31211–31212

Justice Department
See Antitrust Division
See Drug Enforcement Administration
See National Institute of Corrections

Labor Department
NOTICES
Agency Information Collection Activities; Proposals, Submissions, and Approvals:
Administration of the Longshore and Harbor Workers' Compensation Act, 31228–31229
Application for Continuation of Death Benefit for Student, 31229
Coverage Options Under Fair Labor Standards Act Section 18B, 31227–31228
Student Experience Assessment of Job Corps Centers, 31229–31230

Land Management Bureau
NOTICES
Plats of Survey:
Colorado, 31208

National Drug Control Policy Office
PROPOSED RULES
Freedom of Information Act, 31087–31096

National Institute of Corrections
NOTICES
Meetings:
Advisory Board, 31227

National Institutes of Health
NOTICES
Meetings:
Advisory Committee to the Director, 31194
Center For Scientific Review, 31194–31196
National Heart, Lung, and Blood Institute, 31194
National Institute of Allergy and Infectious Diseases, 31193–31194, 31196
Prospective Grant of Exclusive Patent License:
Antibody-Based Therapy for the Treatment of CD20 Expressing Lymphomas, 31193

National Oceanic and Atmospheric Administration
NOTICES
Establishing an Advisory Council Pursuant to the National Marine Sanctuaries Act and Solicitation for Applications for the Mallows Bay-Potomac River National Marine Sanctuary Advisory Council, 31161–31162
Meetings:
New England Fishery Management Council, 31159, 31161, 31163–31164
Pacific Fishery Management Council, 31145–31146, 31160–31161
Take of Marine Mammals Incidental to Specified Activities:
Ward Cove Cruise Ship Dock Project, Juneau, AK, 31146–31159

National Science Foundation
NOTICES
Meetings:
Advisory Committee for Social, Behavioral and Economic Sciences, 31230

Nuclear Regulatory Commission
NOTICES
Meetings:
Advisory Committee on Reactor Safeguards, 31230–31231

Postal Regulatory Commission
NOTICES
Inbound Competitive Multi-Service Agreements with Foreign Postal Operators, 31231–31232

Postal Service
NOTICES
Meetings; Sunshine Act, 31232

Presidential Documents
EXECUTIVE ORDERS
Economic Recovery; Regulatory Relief Efforts To Support (EO 13924), 31351–31356

Railroad Retirement Board
NOTICES
Agency Information Collection Activities; Proposals, Submissions, and Approvals, 31232–31235

Reclamation Bureau
NOTICES
Environmental Impact Statements; Availability, etc.:
Navajo Generating Station-Kayenta Mine Complex; Termination, 31208–31209

Rural Business-Cooperative Service
RULES
Guaranteed Loanmaking and Servicing Regulations, 31035–31042
NOTICES
Funding Availability:
The Business and Industry Coronavirus Aid, Relief, and Economic Security Act Guaranteed Loan Program, 31139–31141

Rural Utilities Service
RULES
Guaranteed Loanmaking and Servicing Regulations, 31035–31042

Securities and Exchange Commission
NOTICES
Amendments to the National Market System Plan Governing the Consolidated Audit Trail, 31322–31349
Application:
Varagon Capital Corp., et al., 31257–31265
Intent to Cancel Registration Pursuant to Section 203(h) of the Investment Advisors Act of 1940, 31245–31246
Meetings; Sunshine Act, 31239, 31253
Self-Regulatory Organizations; Proposed Rule Changes:
BOX Exchange, LLC, 31265–31273
Cboe BZX Exchange, Inc., 31246–31250
Cboe EDGA Exchange, Inc., 31250–31253

Cboe EDGX Exchange, Inc., 31253–31257
Miami International Securities Exchange, LLC, 31239–31245
New York Stock Exchange, LLC, NYSE American, LLC, NYSE Arca, Inc., NYSE Chicago, Inc., and NYSE National, Inc., 31273–31281
The Options Clearing Corp., 31235–31239

Transportation Department
See Federal Aviation Administration
See Federal Railroad Administration

Treasury Department
See Fiscal Service
See Foreign Assets Control Office
See Internal Revenue Service
NOTICES
Development and Potential Issuance of Treasury Floating Rate Notes Indexed to the Secured Overnight Financing Rate, 31282–31284

U.S. Customs and Border Protection
RULES
Announcement of Vessel Manifest Confidentiality Online Application and Update of Mailing and Email Addresses for Submission of Vessel Manifest Confidentiality Certifications, 31054–31057
Temporary Travel Restrictions Applicable to Land Ports of Entry and Ferries Service Between the United States and Canada, 31059–31060
Temporary Travel Restrictions Applicable to Land Ports of Entry and Ferries Service Between the United States and Mexico, 31057–31058

Veterans Affairs Department
NOTICES
Agency Information Collection Activities; Proposals, Submissions, and Approvals:
Monthly Certification of On-The-Job and Apprenticeship Training, 31284

Western Area Power Administration
NOTICES
Agency Information Collection Activities; Proposals, Submissions, and Approvals, 31180–31182

Separate Parts In This Issue

Part II
Environmental Protection Agency, 31286–31320

Part III
Securities and Exchange Commission, 31322–31349

Part IV
Presidential Documents, 31351–31356

Reader Aids
Consult the Reader Aids section at the end of this issue for phone numbers, online resources, finding aids, and notice of recently enacted public laws.

To subscribe to the Federal Register Table of Contents electronic mailing list, go to https://public.govdelivery.com/accounts/USGPOOFR/subscriber/new, enter your e-mail address, then follow the instructions to join, leave, or manage your subscription.

CFR PARTS AFFECTED IN THIS ISSUE

A cumulative list of the parts affected this month can be found in the Reader Aids section at the end of this issue.

3 CFR

Executive Orders:

13924 31353

7 CFR

4279 31035

Proposed Rules:

9 31062

10 CFR

Proposed Rules:

430 31065
431 31065

14 CFR

39 (2 documents) 31042, 31046
71 31049

Proposed Rules:

39 31083

15 CFR

801 31050

16 CFR

Proposed Rules:

318 31085

19 CFR

Ch. I (2 documents) 31057, 31059
103 31054

21 CFR

Proposed Rules:

1401 31087

26 CFR

Proposed Rules:

1 31096

31 CFR

541 31060

33 CFR

Proposed Rules:

100 (2 documents) 31099, 31102

40 CFR

63 31286

Proposed Rules:

2 31104
52 (4 documents) 31112, 31113, 31116, 31118
60 31124
180 31130
228 31133

47 CFR

Proposed Rules:

54 31134

Rules and Regulations

Federal Register
Vol. 85, No. 100
Friday, May 22, 2020

This section of the FEDERAL REGISTER contains regulatory documents having general applicability and legal effect, most of which are keyed to and codified in the Code of Federal Regulations, which is published under 50 titles pursuant to 44 U.S.C. 1510.

The Code of Federal Regulations is sold by the Superintendent of Documents.

DEPARTMENT OF AGRICULTURE

Rural Business-Cooperative Service

Rural Utilities Service

7 CFR Parts 4279

[Docket No. RBS–20–BUSINESS- 0016]

RIN 0570–AB07

Guaranteed Loanmaking and Servicing Regulations

AGENCY: Rural Business-Cooperative Service and Rural Utilities Service, USDA.

ACTION: Interim final rule.

SUMMARY: The Rural Business-Cooperative Service (RBCS), a Rural Development agency of the United States Department of Agriculture (USDA), is issuing an interim final rule to update the Business and Industry (B&I) Guaranteed Loan Program to allow flexibility to obligate federal funds for guaranteed loans pursuant to the Coronavirus Aid, Relief, and Economic Security Act (CARES Act) in response to the national COVID–19 Public Health Emergency. The RBCS is responsible for administering the B&I Guaranteed Loan Program.

DATES:

Effective Date: May 22, 2020.

Applicability date: This interim final rule applies to applications submitted under the B&I CARES Act Guaranteed Loan Program through June 22, 2020 or until funds made available for this purpose are expended.

Comment Date: This rule is being issued to allow for immediate implementation of this program. Although this interim final rule is effective immediately, comments are solicited from interested members of the public on all aspects of the interim final rule. These comments must be submitted and received on or before June 22, 2020. The RBCS will consider these comments and the need for making any revisions as a result of these comments.

ADDRESSES: Comments may be submitted on this interim final rule using the following method:

• *Electronically using the Federal eRulemaking Portal:* Go to *http://www.regulations.gov* and in the ''Search Documents'' box, enter the Docket Number RBS–20–BUSINESS–0016 or the RIN # (0570–AB07), and click the ''Search'' button. To submit a comment, choose the ''Comment Now!'' button. Information on using *Regulations.gov*, including instructions for accessing documents, submitting comments, and viewing the docket after the close of the comment period, is available under the ''Help'' tab at the top of the Home page. In the Docket ID column, select RBS–20–BUSINESS–0016 to submit or view public comments and to view supporting and related materials available electronically. Information on using *Regulations.gov*, including instructions for accessing documents, submitting comments, and viewing the docket after the close of the comment period, is available through the site's ''User Tips'' link.

Other Information: Additional information about Rural Development and its programs is available on the internet at *http://www.rd.usda.gov.*

FOR FURTHER INFORMATION CONTACT: Mark Brodziski, Acting Administrator, Rural Business and Cooperative Service, Rural Development, U.S. Department of Agriculture, 1400 Independence Avenue SW, Stop Washington, DC 20250–3221; email: *mark.brodziski@usda.gov*; telephone (202) 205–0903.

SUPPLEMENTARY INFORMATION:

Executive Summary

Background Information

On March 13, 2020, President Trump declared the ongoing Coronavirus Disease 2019 (COVID–19) pandemic of sufficient severity and magnitude to warrant an emergency declaration for all states, territories, and the District of Columbia. With the COVID–19 emergency, many businesses nationwide are experiencing economic hardship as a direct result of the Federal, State, and local public health measures that are being taken to minimize the public's exposure to the virus. These measures, as well as advice to physically social distance from other people and to stay at home or ''shelter in place,'' have resulted in a dramatic negative impact on the livelihood of many Americans and, in turn, negatively impacted the national economy.

In order to provide some financial relief to American families, on March 27, 2020, the President signed the Coronavirus Aid, Relief, and Economic Security Act (the CARES Act or the Act) (Pub. L. 116–136) to provide emergency assistance and health care response for individuals, families, and businesses affected by the coronavirus pandemic. The Rural Business Cooperative Service (RBCS) received funding and authority through Division B, Title I of the CARES Act to provide for additional funds for use under the Business & Industry (B&I) Guaranteed Loan Program.

Rural Development is a mission area within the USDA comprised of the Rural Utilities Service, Rural Housing Service and RBCS. Its mission is to increase economic opportunity and improve the quality of life in rural communities by providing the leadership, infrastructure, access to capital, and technical support that enables rural communities to prosper. To achieve its mission, Rural Development provides financial support through more than 40 programs including direct loans, grants, loan guarantees, and technical assistance to help improve the quality of life and provide the foundation for economic development in rural areas.

The B&I Guaranteed Loan Program was authorized by the Rural Development Act of 1972. The loans are made by private lenders to rural businesses for the purpose of creating new businesses, expanding existing businesses, and for other purposes that create employment opportunities in rural America. Businesses in rural areas are eligible for this program. Rural areas, as defined at 7 CFR 4279.108(c), are any area of a State other than a city or town that has a population of greater than 50,000 inhabitants and any urbanized area contiguous and adjacent to such a city or town. The types of borrowers that are served by the B&I Guaranteed Loan Program are cooperative organizations, corporations, partnerships, or other legal entities organized and operated on a profit or nonprofit basis; Indian tribes on a Federal or State reservation or other

federally recognized tribal group; public bodies; or individuals, provided the borrower is engaged in, or proposing to engage in, a business. Loans can be made for a variety of purposes, including business acquisition, expansion or improvement; purchase of real estate, machinery and equipment, or supplies; limited debt refinancing; and working capital. The rate and term of the loan is negotiated between the business and the lender.

Purpose of the Regulatory Action

The Rural Business Cooperative Service (RBCS) received funding and authority through Division B, Title I of the CARES Act to provide for additional funds for use under the Business & Industry (B&I) Guaranteed Loan Program. In accordance with the CARES Act, the purpose of the additional B&I funding is to prevent, prepare for and respond to the effects of the COVID–19 pandemic. It is the Agency's intent that guaranteed loan funds will be used for working capital loan purposes to support business operations and facilities in rural areas. This funding will assist rural businesses that are impacted due to the economic impacts of the COVID–19 emergency. This critical funding will allow rural businesses to have access to funding for operating expenses to allow them to sustain operations. This rule will supplement the current B&I Guaranteed Loan Program as implemented in 7 CFR part 4279—Guaranteed Loan Making and 7 CFR part 4287—Servicing, with the new B&I CARES Act Guaranteed Loan Program (B&I CARES Act Program).

Beneficiaries of the B&I CARES Act Program Provision

Currently, with the COVID–19 emergency, there is a lack of access to much needed capital to support business operations and facilities. This holds true particularly for businesses in rural areas. Shelter in place requirements and restrictions on businesses reducing operations to only essential services are having an adverse impact on rural businesses and their capacities to fund operating expenses.

Input and feedback to the Agency from businesses and business associations, bankers and bank associations, and other rural stakeholders highlight a growing concern that the erosion of working capital will require businesses to seek funding for working capital to sustain businesses during the COVID–19 emergency and to restart and ramp up business operations once the COVID–19 emergency is resolved. The National Rural Lenders Association, Rural Lenders Roundtable, ICBA Agriculture and Rural Lenders, and ABA Agriculture and Rural Banking committee reached out to the Agency to emphasize that many of the rural business borrowers will be unable to meet lenders' requirements for working capital loans without the support of a government guarantee. Rural businesses have limited options to access credit due to the limited number of banks serving rural communities. The B&I Guaranteed Loan program enables local lenders to serve rural businesses as evidenced by the fact that over 75 percent of the lenders in the B&I loan portfolio are local community banks financing local businesses.

In addition to agricultural lenders, agribusiness and agricultural producer stakeholders have reached out to the Agency to emphasize the adverse impacts of the COVID–19 emergency to agricultural producers and agribusinesses, the financial needs of agricultural producers and the lack of assistance available to agricultural producers that are too large to qualify for SBA programs or USDA Farm Service Agency (FSA) guaranteed loan programs. The B&I CARES Act Program will also serve farmers, farm labor, and agribusiness. The eligibility requirements of the B&I Guaranteed Loan Program focus on the use of loan funds and not on the borrowers' primary industry classification, such as agricultural production. Loan proceeds of B&I guaranteed loans cannot generally be used for costs related to agricultural production; however, the B&I CARES Act Program will expand eligible use of loan funds to include loans to agricultural producers whose financial needs are greater than loan amounts available under FSA guaranteed loans or are otherwise ineligible for FSA guaranteed loans. Expansion of the program to larger agricultural producers, currently ineligible under B&I, could result in high utilization of available program funding by agricultural producers and limit availability of funding to other rural businesses. To enable large agricultural producers and rural businesses of all industry sectors access to the program, the aggregate total amount of loans for agricultural production will initially be limited to 50 percent of the total amount of program level for the B&I CARES Act Program. This restriction is intended to provide eligible rural businesses of all industry sectors the flexibility they need to use the program effectively. The Agency may publish future notices in the **Federal Register** revising the limitation of the amount of funding made available for loans for agricultural production to align with the demand for these loans.

Agribusinesses (non-agricultural production businesses such as supply services, marketing, processing, and other services) are eligible and include agribusinesses owned by agricultural producers. Certain food processing and distribution businesses located in urban areas may be eligible if certain requirements are met including the processing of agricultural commodities whereby the food sold is grown locally or regionally.

The New B&I CARES Act Guaranteed Loan Program

The B&I Guaranteed Loan program, as funded by the CARES ACT, is similar, yet different from other Federal Government programs. The B&I CARES Act Program will focus assistance to rural businesses, including agribusinesses and agricultural producers, with financial needs unmet by other Federal Government programs to prevent, prepare for, and respond to the coronavirus pandemic. The Small Business Administration (SBA) Economic Injury Disaster Loans (EIDL) provides working capital to help small businesses survive until normal operations resume after a disaster. EIDL can provide up to $2 million to help meet financial obligations and operating expenses that could have been met had the disaster not occurred. EIDL assistance is available only to small businesses when SBA determines they are unable to obtain credit elsewhere. Currently, access to the EIDL program is further limited and SBA is accepting new EIDL and EIDL Advance applications on a limited basis only to provide relief to U.S. agricultural businesses. Although loan purposes under the B&I CARES Act Program may overlap with loan purposes of EIDL, the B&I CARES Act Program will focus assistance to rural businesses that are ineligible to submit new EIDL applications or that are too large or otherwise not eligible for EIDL or have financial needs due to the coronavirus pandemic greater than EIDL assistance.

SBA also administers the Paycheck Protection Program (PPP). PPP is designed to provide a direct incentive for small businesses to keep their employees on the payroll. PPP loans are eligible for forgiveness of up to the full principal amount of the loans if employee and compensation levels are maintained or restored to full-time employment by June 30, 2020 and the loan proceeds are used for payroll, rent, mortgage interest, or utilities. At least

75% of the forgiven amount must have been used for certain qualifying payroll costs. The guaranteed loans funded by the B&I CARES Act Program will be for working capital loan purposes to support business operations and facilities in rural areas. While loan purposes under the B&I CARES Act Program may overlap with some of the purposes of the SBA PPP, the B&I CARES Act Program guaranteed loans will cover a broader range of typical business operating expenses and will not be focused on payroll costs. The B&I CARES Act Program will include funding for inventory, raw materials, supplies, and critical operating expenses for rural manufacturing businesses, including purposes that were not included in the allowable uses of PPP funds.

The B&I CARES Act guaranteed loan funds may be used by eligible businesses to finance business operating expenses incurred for a period up to 12 months, whereas the PPP maximum loan amount is for a period of 2.5 months and the amount of forgiveness of a PPP loan depends on the borrower's payroll costs over an eight-week period. B&I CARES Act Program guaranteed loan funds may be used by rural businesses that require additional working capital to sustain and ramp up business operations once the emergency is resolved. The maximum B&I CARES Act Program loan amount a business may receive will be reduced by the amount of any SBA EIDL or PPP loans and other Federal emergency assistance they receive in order to prevent duplication of program services.

The B&I CARES Act Program guaranteed loan will be a 90% guarantee and require the lender to retain a percentage of the loan and thus hold some of the risk. The loans do not include terms for loan forgiveness and require 100% repayment by the borrower. The loans must be secured with business collateral and may require personal guarantees.

A bank or lender that is not already a participating lender in SBA's guaranteed business loan program (7(a) loan program) must be approved or authorized by the SBA. All lenders that are subject to supervision and credit exam by a Federal or State agency are automatically eligible to participate in the B&I program. Non-supervised lenders may apply to the Agency for approval as an eligible lender.

There are also differences in borrower eligibility requirements between this B&I CARES Act Program and SBA PPP. The PPP is limited to certain businesses and non-profit enterprises qualifying by size of business, mainly based on the number of employees. SBA does not have any geographic restrictions or preferences. The B&I program is available only to businesses located in rural areas as defined in the B&I statute, with limited exceptions. Businesses with multiple locations, rural and non-rural, are eligible when the use of loan funds is to support business facilities and operations in eligible rural areas. The program does not have any restriction on the size of business or business ownership structures.

Summary of Modifications to the B&I Program Regulation To Provide for the B&I CARES Act Guaranteed Loans Program

The B&I CARES Act Program will expand eligible use of loan funds to include loans for agricultural production when the borrower's financial needs are greater than loan amounts available under FSA guaranteed loans or is otherwise ineligible for FSA guaranteed loans.

All the standard requirements of commercial loan applications may further restrict rural businesses' ability to access credit. For example, access to appraisal services and accounting and financial services may be limited due to social distancing and business service restrictions. Balancing credit underwriting standards with businesses' needs to access capital, the Agency is modifying its requirements for certain loan application information for the B&I CARES Act Guaranteed Loan Program. The Agency is providing more flexibility to lenders by accepting appraisals completed within the last two years (rather than a current year appraisal), and updated appraisals (rather than completely new appraisals). The Agency is also increasing the threshold of the loan amount which triggers when appraisals are required for loans in order to align with guidance by FDIC and other credit supervision agencies. The Agency will not require discounting the value of collateral for working capital loans but will continue to require security for loans and will continue limiting the amount of the loan so that it does not exceed the market value of collateral.

The Agency is also providing more flexibility to lenders to accept borrowers' tax records in lieu of obtaining historical financial statements to document a borrower's financial history and loan repayment ability. Use of tax records is standard in commercial lending practices. Agricultural producers' financial records must meet the industry's standard accounting practices.

Loss of income and ongoing fixed operating expenses may deplete a business's working capital and attempts by a business to finance working capital with additional debt will decrease the equity of a business. The Agency is providing borrowers more flexibility in the form of alternatives to meet the B&I requirement of 10% investment in the business by the borrower. Businesses currently facing financial distress will need time to recover. Repayment requirements of additional debt may further distress and lengthen their financial recovery period. To ease a borrower's capital requirement, the B&I CARES Act Program utilizes existing authorities for deferral of principal and interest payments in the first three years from loan origination and extends the maximum repayment term for working capital loans from 7 years to 10 years. Interest shall be paid at least annually from the date of the note.

In summary, the Agency considered the type of enhancements that participating lenders would need to be able to generate quality loans and approve and disburse loan funds in a timely and efficient manner in these critical times. The Agency focused on adjusting several requirements under the current B&I program which would enable lenders greater flexibility in structuring loans while taking into consideration the borrowers' current financial condition and capacity, but also assuring that such adjustments can be made without compromising Agency underwriting standards. For the B&I CARES Act Program guaranteed loans, the Agency made program adjustments to the following: (a) Maximum percentage of guarantee; (b) equity evaluation; (c) appraisal evaluations; (d), collateral evaluation; and (e) maximum repayment terms for working capital loans. The Agency evaluated guarantee fee and annual renewal fee percentages, components of the credit subsidy scoring, necessary to achieve a balance between fee amounts adequate to decrease default risk and fee amounts at reasonable levels to applicants facing financial distress. The Agency intends fees to be reasonable and in an amount adequate to support program levels to make the program available to as many recipients as possible.

As a result of these considerations and the funding purposes outlined in the CARES Act, the Agency decided to offer the following under the B&I CARES Act Program: (1) 90 percent guarantees to all B&I CARES Act Program funded loans, (2) 2 percent guarantee fee; (3) acceptance of appraisals completed within two years of the date of the application; (4) no

discounting of collateral for working capital loans; and (5) extension of the maximum term for working capital loans to 10 years.

Changes to the B&I Guaranteed Loan Program regulations apply only to the loans funded under the CARES Act and do not apply to loans funded under the Appropriations Act of 2020 or any other appropriations other than the CARES Act.

Executive Order 12866, Regulatory Planning and Review

This interim final rule has been reviewed by the Office of Management and Budget under Executive Order 12866 and determined to be economically significant for the purposes of Executive Orders 12866 and, is considered a major rule under the Congressional Review Act. The Executive Order defines an ''economically significant regulatory action'' as one that is likely to result in a rule that may: (1) Have an annual effect on the economy of $100 million or more or adversely affect, in a material way, the economy, a sector of the economy, productivity, competition, jobs, the environment, public health or safety, or State, local, or tribal governments or communities; (2) create a serious inconsistency or otherwise interfere with an action taken or planned by another agency; (3) materially alter the budgetary impact of entitlements, grants, user fees, or loan programs or the rights and obligations of recipients thereof; or (4) raise novel legal or policy issues arising out of legal mandates, the President's priorities, or the principles set forth in this E.O. This interim rule was determined to be economically significant because the changes to the B&I Guaranteed Loan Program regulations are estimated to have an impact on the economy of more than $100 million.

RBCS, however, is proceeding under the emergency provision of Executive Order 12866 Section 6(a)(3)(D) based on the need to move expeditiously to mitigate the current economic conditions arising from the COVID–19 emergency. RBCS is publishing this interim final rule to codify new funding purposes consistent with the purposes of the CARES Act—to prevent, prepare for and respond to the COVID–19 emergency. To the extent practicable under the circumstances related to the COVID–19 emergency, RBCS has met, or attempted to meet the provisions of Section 6(a)(3)(B) and (C) of the Executive Order. The Agency has determined that the most effective use of these program funds to meet this purpose is to primarily focus on funding working capital loans to support business operations and facilities in rural areas. The new provisions of the regulation will ensure the consistent and streamlined implementation by the Agency of these additional flexibilities to respond to the COVID–19 Emergency.

Administrative Procedure Act Statement

The CARES Act provides for additional funds to the Agency under the B&I Guaranteed Loan Program to prevent, prepare for and respond to the coronavirus. The Agency is issuing this interim rule without advance rulemaking or public comment. The Administrative Procedure Act of 1946, as amended (5 U.S.C. 553) (APA), has several exemptions to rulemaking requirements. Section 553(b)(3)(B) of the APA authorizes agencies to dispense with rulemaking notice and comment procedures for rules when the agency, for ''good cause,'' finds that those procedures are ''impracticable, unnecessary, or contrary to the public interest'' Additionally, agencies are authorized to dispense with the 30-day delayed effective date requirement as otherwise provided by the agency for good cause found and published with the rule by Section 553(d) of the same act. Under these sections, USDA has determined, upon finding good cause, that making these funds available as authorized in Division B, Title I of the CARES Act as expeditiously as possible is in the public interest in order to address the national COVID–19 Public Health Emergency. Therefore, the Agency has determined that withholding these funds to provide for public notice and comment would unduly delay the provision of benefits and be contrary to the public interest in response to the national COVID–19 Public Health Emergency. This rule is being issued to allow for immediate implementation of this program. Although this interim final rule is effective immediately, comments are solicited from interested members of the public on all aspects of the interim final rule. These comments must be submitted on or before June 22, 2020. RBCS will consider these comments and the need for making any revisions to this rule or to the B&I CARES Act Program as a result of these comments.

Congressional Review Act

Pursuant to the Congressional Review Act (5 U.S.C. 801), the Office of Information and Regulatory Affairs of the Office of Management and Budget designated this action as a major rule, as defined by 5 U.S.C. 804(2) because this action will result in an annual effect on the economy of $100,000,000 or more. However, notwithstanding 5 U.S.C. 801, section 808(2) of the Congressional Review Act (5 U.S.C. 808(2)) permits that if any rule which an agency for good cause finds that not issuing the notice and public procedure thereon would be impracticable, unnecessary, or contrary to the public interest, shall take effect at such in the time that the Agency determines. USDA has determined, under section 808(2), that making these funds available through the issuance of this interim rule, as authorized in Division B, Title I of the CARES Act, supplements existing authority implemented through regulatory authority in 7 CFR 4279, Subpart A and B, and 7 CFR 4287, Subpart B, and find good cause that notice and public procedure would be impracticable and contrary to the public interest, in light of the national COVID–19 Public Health Emergency. Such finding is made because withholding these funds would unduly delay the provision of emergency benefits under the CARES Act, which Congress intended to provide expeditious relief to address the current economic conditions arising from the COVID–19 emergency. This rule is being issued to allow for immediate implementation of this program. Although this interim final rule is effective immediately, comments are solicited from interested members of the public on all aspects of the interim final rule. These comments must be submitted on or before June 22, 2020. RBCS will consider these comments and the need for making any revisions to this rule or the B&I CARES Act Program as a result of these comments.

Executive Order 12988, Civil Justice Reform

This interim rule has been reviewed under Executive Order 12988, Civil Justice Reform. The Agency has determined that this interim rule meets the applicable standards provided in section 3 of the Executive Order. In addition, all state and local laws and regulations that conflict with this interim rule will be preempted. No retroactive effect will be given to this interim rule and, in accordance with section 212(e) of the Department of Agriculture Reorganization Act of 1994 (7 U.S.C. 6912(e)), administrative appeal procedures must be exhausted before an action against the Department or its agencies may be initiated.

Executive Order 12372, Intergovernmental Review

B&I guaranteed loans are subject to the Provisions of Executive Order

12372, which require intergovernmental consultation with State and local officials. The Agency will conduct intergovernmental consultation in accordance with 2 CFR part 415, subpart C.

Executive Order 13132, Federalism

The policies contained in this interim final rule do not have any substantial direct effect on States, on the relationship between the National Government and the States, or on the distribution of power and responsibilities among the various levels of government. Nor does this interim final rule impose substantial direct compliance costs on State and local governments. Therefore, the Agency has determined that consultation with the States is not required.

Executive Order 13175, Consultation and Coordination With Indian Tribal Governments

This interim final rule has been reviewed in accordance with the requirements of Executive Order 13175, ''Consultation and Coordination with Indian Tribal Governments.'' Executive Order 13175 requires Federal agencies to consult and coordinate with tribes on a government-to-government basis on policies that have tribal implications, including regulations, legislative comments or proposed legislation, and other policy statements or actions that have substantial direct effects on one or more Indian tribes, on the relationship between the Federal Government and Indian tribes or on the distribution of power and responsibilities between the Federal Government and Indian tribes. Rural Development has assessed the impact of this interim final rule on Indian tribes and determined that this final rule does not, to our knowledge, have tribal implications that require tribal consultation under E.O. 13175. If a tribe would like to engage in consultation with Rural Development on this rule, please contact Rural Development's Native American Coordinator at (720) 544–2911 or *AIAN@wdc.usda.gov.*

Regulatory Flexibility Act Certification

The Regulatory Flexibility Act (RFA) generally requires that when an agency issues a proposed rule, or a final rule pursuant to section 553(b) of the APA or another law, the agency must prepare a regulatory flexibility analysis that meets the requirements of the RFA and publish such analysis in the **Federal Register**. 5 U.S.C. 603, 604. Specifically, the RFA normally requires agencies to describe the impact of a rulemaking on small entities by providing a regulatory impact analysis. Such analysis must address the consideration of regulatory options that would lessen the economic effect of the rule on small entities. The RFA defines a ''small entity'' as (1) a proprietary firm meeting the size standards of the SBA; (2) a nonprofit organization that is not dominant in its field; or (3) a small government jurisdiction with a population of less than 50,000. 5 U.S.C. 601(3), Except for such small government jurisdictions, neither State nor local governments are ''small entities.'' Similarly, for purposes of the RFA, individual persons are not small entities. The requirement to conduct a regulatory impact analysis does not apply if the head of the agency ''certifies that the rule will not, if promulgated, have a significant economic impact on a substantial number of small entities.'' 5 U.S.C. 605(b). The agency must, however, publish the certification in the **Federal Register** at the time of publication of the rule, ''along with a statement providing the factual basis for such certification.'' If the agency head has not waived the requirements for a regulatory flexibility analysis in accordance with the RFA waiver provision, and no other RFA exception applies, the agency must prepare the regulatory flexibility analysis and publish it in the **Federal Register** at the time of promulgation or, if the rule is promulgated in response to an emergency that makes timely compliance impracticable, within 180 days of publication of the final rule. 5 U.S.C. 604(a), 608(b). Rules that are exempt from notice and comment are also exempt from the RFA requirements, including conducting a regulatory flexibility analysis, when among other things, the agency for good cause finds that notice and public procedure are impracticable, unnecessary, or contrary to the public interest. Accordingly, as authorized by Section 553(b)(3)(B) and Section 553(d) of the APA as well as supported in the federal agency source book published by the Small Business Administration's Office of Advocacy, '' *A Guide to for Government Agencies, How to Comply with the Regulatory Flexibility,* Ch.1. p.9., the Agency is not required to conduct a regulatory flexibility analysis.

Information Collection and Recordkeeping Requirements

In accordance with the Paperwork Reduction Act of 1995 (44 U.S.C. chapter 35), the information collection activities associated with this interim final rule are covered under the Business and Industry (B&I) Guaranteed Loan Program, OMB Docket Number 0570–0069.

E-Government Act Compliance

The RBCS is committed to the E-Government Act, which requires Government agencies in general to provide the public the option of submitting information or transacting business electronically to the maximum extent possible.

National Environmental Policy Act Certification

This interim final rule has been reviewed in accordance with 7 CFR part 1970, ''Environmental Policies and Procedures.'' The Agency has determined that this is not a major Federal action significantly affecting the quality of the human environment, and in accordance with the National Environmental Policy Act of 1969 (42 U.S.C. 4321 *et seq.*), an Environmental Impact Statement is not required.

Catalog of Federal Domestic Assistance

The program described by this interim final rule is listed in the Catalog of Federal Domestic Assistance Programs under number 10.768—Business and Industry Guaranteed Loan Program. This catalog is available on a subscription basis from the Superintendent of Documents, the United States Government Printing Office, Washington, DC, 20402–9325, telephone number (202) 512–1800 and at *https://www.cfda.gov.*

Unfunded Mandates

This interim final rule contains no Federal mandates (under the regulatory provision of title II of the Unfunded Mandates Reform Act of 1995) for State, local, and Tribal governments or the private sector. Therefore, this interim final rule is not subject to the requirements of section 202 and 205 of the Unfunded Mandates Reform Act.

Civil Rights Impact Analysis

Rural Development has reviewed this interim final rule in accordance with USDA Regulation 4300–4, ''Civil Rights Impact Analysis,'' to identify any major civil rights impacts this interim final rule might have on program participants on the basis of age, race, color, national origin, sex or disability. After review and analysis of the interim final rule and available data, it has been determined that based on the analysis of the program purpose, application submission and eligibility criteria, issuance of this interim final rule will neither adversely nor disproportionately impact very low, low and moderate-income populations, minority

populations, women, Indian tribes or persons with disability, by virtue of their race, color, national origin, sex, age, disability, or marital or familiar status.

USDA Non-Discrimination Policy

In accordance with Federal civil rights law and U.S. Department of Agriculture (USDA) civil rights regulations and policies, the USDA, its Agencies, offices, and employees, and institutions participating in or administering USDA programs are prohibited from discriminating based on race, color, national origin, religion, sex, gender identity (including gender expression), sexual orientation, disability, age, marital status, family/parental status, income derived from a public assistance program, political beliefs, or reprisal or retaliation for prior civil rights activity, in any program or activity conducted or funded by USDA (not all bases apply to all programs). Remedies and complaint filing deadlines vary by program or incident.

Persons with disabilities who require alternative means of communication for program information (*e.g.,* Braille, large print, audiotape, American Sign Language, etc.) should contact the responsible Agency or USDA's TARGET Center at (202) 720–2600 (voice and TTY) or contact USDA through the Federal Relay Service at (800) 877–8339. Additionally, program information may be made available in languages other than English.

To file a program discrimination complaint, complete the USDA Program Discrimination Complaint Form, AD–3027, found online at *http://www.ascr.usda.gov/complaint_filing_cust.html* and at any USDA office or write a letter addressed to USDA and provide in the letter all of the information requested in the form. To request a copy of the complaint form, call (866) 632–9992. Submit your completed form or letter to USDA by: (1) Mail: U.S. Department of Agriculture, Office of the Assistant Secretary for Civil Rights, 1400 Independence Avenue SW, Washington, DC 20250–9410; (2) fax: (202) 690–7442; or (3) email: *program.intake@usda.gov.*

USDA is an equal opportunity provider, employer, and lender.

List of Subjects for 7 CFR Parts 4279

Loan programs-business, Reporting and recordkeeping requirements, Rural areas.

Accordingly, for reasons set forth in the preamble, 7 CFR part 4279 is amended as set forth below:

PART 4279—GUARANTEED LOANMAKING

■ 1. The authority citation for part 4279 is revised to read as follows:

Authority: 5 U.S.C. 301; and 7 U.S.C. 1989: and Public Law 116–136, Division B, Title I.

Subpart A—General

■ 2. Amend § 4279.1 by revising paragraph (a) as follows:

§ 4279.1 Introduction.

(a) This subpart contains general regulations for making and servicing Business and Industry (B&I) loans guaranteed by the Agency and applies to lenders, holders, borrowers, and other parties involved in making, guaranteeing, holding, servicing, or liquidating such loans. This subpart is supplemented by subpart B of this part, which contains loan processing regulations, and subpart B of part 4287 of this chapter, which contains loan servicing regulations. This subpart also contains regulations for Business and Industry loans under the authority of the Coronavirus Aid, Relief, and Economic Security Act (CARES Act) (Pub. L. 116–136) to provide B&I guarantees for loans needed as a result of the Coronavirus Disease 2019 (COVID–19) pandemic for working capital loan purposes to support business operations and facilities in rural areas (B&I CARES Act Program Loans). Some of the requirements of this subpart are waived or altered for B&I CARES Act Program Loans. The waivers and alterations are provided in § 4279.190 of this subpart.

* * * * *

■ 3. Amend § 4279.101 by revising paragraph (a) to read as follows:

§ 4279.101 Introduction.

(a) *Content.* This subpart contains loan processing regulations for the Business and Industry (B&I) Guaranteed Loan Program. It is supplemented by subpart A of this part, which contains general guaranteed loan regulations, and subpart B of part 4287 of this chapter, which contains loan servicing regulations. This subpart also contains regulations for Business and Industry loans under the authority of the Coronavirus Aid, Relief, and Economic Security Act (CARES Act) (Pub. L. 116–136) to provide B&I guarantees for loans needed as a result of the Coronavirus Disease 2019 (COVID–19) pandemic for working capital loan purposes to support business operations and facilities in rural areas (B&I CARES Act Program Loans). Some of the requirements of this subpart are waived or altered for B&I CARES Act Program Loans. The waivers and alterations are provided in § 4279.190 of this subpart.

* * * * *

■ 4. Add § 4279.190 to Subpart B to read as follows:

§ 4279.190 Business and Industry national COVID–19 Public Health Emergency Loans.

(a) *Introduction.* This section contains regulations for the Business and Industry National COVID–19 Public Health Emergency loan program (B&I CARES Act Program Loans). The purpose of the program is to provide loan guarantees under the authority of the Coronavirus Aid, Relief, and Economic Security Act (CARES Act) (Pub. L. 116–136). These B&I CARES Act Program Loans cover costs to prevent, prepare for and respond to the coronavirus. Consistent with the purposes of the CARES Act, the Agency has determined that the most effective use of these program funds is to support the cost of guaranteed loans to rural businesses to respond to the coronavirus. No B&I CARES Act Program Loan guarantee will be approved after September 30, 2021. All provisions of Subparts A and B of Part 4279 and Subpart A of Part 4287 of this chapter apply to B&I CARES Act Program Loans, except as provided in this section. All forms used in connection with a B&I CARES Act Program Loan will be those used with other Business and Industry (B&I) loans, except as provided in this section.

(b) *Eligible borrowers.* Section 4279.108 of this subpart applies to B&I CARES Act Program Loans. In addition, borrowers must have been in operation on February 15, 2020.

(c) *Eligible use of funds.* (1) The purpose of any B&I CARES Act Program Loan must be to cover costs to prevent, prepare for, and respond to the coronavirus pandemic in accordance with paragraph (a) of this section. B&I CARES Act Program Loans should not exceed the amount needed to overcome the financial distress caused by the COVID–19 National Emergency.

(2) Notwithstanding the provisions of § 4279.113, B&I CARES Act Program guaranteed loans will be limited to loans for working capital loan purposes in accordance with paragraph (c)(3) of this section. Loan proceeds may be used only to support facilities and business operations in rural areas and the Borrower must have been in operation on February 15, 2020. Loan proceeds must be disbursed through multiple draws on an as-needed monthly basis.

(3) Eligible Working Capital uses of B&I CARES Act Program Loan funds are limited to:

(i) Wages, salaries, sales commissions to employees, group healthcare benefits, and other employee benefits;

(ii) Administrative expenses and administrative service contracts;

(iii) Property insurance, hazard insurance, and other business insurance;

(iv) Principal and interest payments excluding owner/stockholder debt and related-party debts;

(v) Rent, payments on leases, and routine maintenance;

(vi) Utilities;

(vii) Inventory, feed, seed, fertilizer and chemicals, livestock (excluding livestock for breeding) and supplies;

(viii) Marketing, shipping, and other expenses incurred through normal business operations or such additional expenses due to the national COVID–19 Public Health Emergency;

(ix) Taxes; and

(x) Loan costs and essential loan-related expenses.

(4) *Ineligible purposes.* Notwithstanding the provisions of § 4279.113, the following purposes are ineligible for B&I CARES Act Program guaranteed loans:

(i) Purchase and development of land, buildings, and associated infrastructure for commercial or industrial properties, including expansion or modernization;

(ii) Business acquisitions;

(iii) Leasehold improvements;

(iv) Constructing or equipping facilities;

(v) Purchase of machinery and equipment; and

(vi) Debt refinancing unless such debt refinancing is for debts incurred subsequent to February 15, 2020 for eligible purposes listed in paragraph (c)(3) of this section.

(5) *Agricultural production.* The provisions of § 4279.113(q) do not apply to B&I CARES Act Program Loans. Loans for working capital to support agricultural production, including independent agricultural production, is an eligible use of funds when the applicant's loan request exceeds the maximum loan available through Farm Service Agency (FSA) guaranteed loan programs or the applicant's request is otherwise ineligible for FSA loans.

(d) *Loan amount limits.* (1) The provisions of § 4279.119(a) do not apply to B&I CARES Act Program Loans. The total amount of B&I and B&I CARES Act Program Loans to one borrower (including the guaranteed and unguaranteed portions, the outstanding principal and interest balance of any existing B&I guaranteed loans, and the new loan request) cannot exceed $25 million.

(2) The amount of the B&I CARES Act Program Loan shall be based on a cash flow analysis and must not be greater than the amount needed to cure problems caused by the COVID–19 emergency so that the business is reestablished on a successful basis. Losses and business operating expenses that were adequately paid by insurance or by loans or grants from other sources will not be covered by B&I CARES Act Program Loans. LB&I CARES Act Program Loans may be used to supplement insurance payments or assistance from other sources when the insurance coverage or other assistance is insufficient.

(3) The maximum loan amount of the B&I CARES Act Program Loan for working capital purposes may not exceed 12 times the borrower's total average monthly costs of eligible working capital loan purposes less the total amount of covered loans received under the provisions of section 1102 and Section 1110(a)(2) of the CARES Act and other Federal emergency assistance received.

(4) Borrowers receiving B&I CARES Act Program Loans in an amount less than the maximum loan amount in accordance with paragraph (d)(3) of this section, may apply for subsequent loans under this section up to an accumulative amount of B&I CARES Act Program loans not to exceed the maximum loan amount.

(e) *Percentage of guarantee.* The provisions of § 4279.119(b) do not apply to B&I CARES Act Program Loans. The percentage of guarantee is 90 percent.

(f) *Guarantee fee.* The provisions of § 4279.120(a) do not apply to B&I CARES Act Program Loans. The guarantee fee for the B&I CARES Act Program Loans shall be two (2) percent. The guarantee fee is paid at the time the Loan Note Guarantee is issued and may be included as an eligible use of guaranteed loan proceeds. The amount of the guarantee fee is determined by multiplying the total loan amount by the guarantee fee rate by the percentage of guarantee.

(g) *Annual renewal fee.* Notwithstanding the provisions of § 4279.120(b), the annual renewal fee for B&I CARES Act Program Loans shall be one half of one (0.5) percent (50 basis points.)

(h) *Loan terms.* Notwithstanding the provisions of § 4279.126, the maximum allowable repayment term of loans for working capital purposes is 10 years. Loan repayment may defer principal payments or principal and interest payments for a period up to 12 months from loan closing and may extend deferral of principal payments up to a total of three years with a maximum repayment term of 10 years from the date of loan closing.

(i) *Credit quality.* Notwithstanding the provisions of § 4279.131(a), the lender's evaluation of the borrower's repayment ability shall include an emphasis on the borrower's successful financial history and on the borrower's 2019 financial performance, present condition, and future viability.

(j) *Collateral.* B&I CARES Act Program loans must be adequately secured. Notwithstanding the provisions of § 4279.131(b), loan-to-value discounting by the lender is not required for B&I CARES Act Program Loans for working capital purposes. The value of the collateral (fair market value) must be equal to or greater than the loan amount.

(k) *Capital/equity.* Notwithstanding the provisions of § 4279.131(d), the business must meet one of the following requirements at loan closing:

(1) A minimum of 10 percent balance sheet equity (including subordinated debt when subject to a standstill agreement), or a maximum debt-to-balance sheet equity ratio of 9 to 1;

(2) A Borrower investment of equity or other funds into the project equal to 10 percent or more of total eligible project costs, (such investment may include grants or subordinated debt when subject to a standstill agreement); or

(3) The balance sheet equity includes owner-contributed capital of 10 percent or more of total fixed assets (net total fixed assets plus depreciation).

(l) *Appraisals.* Notwithstanding the provisions of § 4279.144, appraisals of real estate and chattel collateral are required when the amount of the loan exceeds $1,000,000, unless the chattel is newly acquired equipment and the value is supported by a bill of sale. The Agency will accept appraisals older than 1 year but completed within 2 years of the application date. Lenders may provide an updated appraisal in lieu of a new complete appraisal when the original appraisal is more than 2 years old. All appraisals of real estate must be compliant with Uniform Standards of Professional Appraisal Practices (USPAP) requirements and reflect the current market value of the collateral as required by § 4279.144(a). To protect lenders, appraisers and Agency staff during the COVID–19 pandemic, an interior or on-site inspection of the collateral is not required if an assumption can be made by the appraiser on a reasonable basis or is based on previous inspections and

condition reports completed by the lender or third party for the collateral.

(m) *Filing preapplications and applications.* (1) B&I CARES Act Program Loan borrowers with existing B&I loans do not need to resubmit their historical financial statements that have been previously submitted through routine loan servicing actions.

(2) Loans for working capital are classified as categorical exclusions for purposes of the Agency's environmental review policies and procedures in accordance with 7 CFR part 1970. These actions normally do not require an applicant to submit environmental documentation with the application. However, based on the review of the project description, the Agency may request additional environmental documentation from the applicant at any time, specifically if the Agency determines that extraordinary circumstances may exist.

(3) Notwithstanding the provisions of § 4279.161(b), a draft loan agreement is not required, a business plan or feasibility study is not required, and lenders may substitute and rely on the borrower's tax returns when financial statements prepared in accordance with GAAP are not available from the borrower. Agricultural producers' financial records must meet the industry's standard accounting practices.

(4) A lender or borrower may combine applications for a B&I CARES Act Program loan for working capital with an application for B&I appropriated fiscal year funds. The provisions of this section do not apply to applications for B&I appropriated fiscal year funds.

Bette B. Brand,

Deputy Under Secretary, Rural Development.

[FR Doc. 2020–11242 Filed 5–21–20; 8:45 am]

BILLING CODE 3410–XY–P

DEPARTMENT OF TRANSPORTATION

Federal Aviation Administration

14 CFR Part 39

[Docket No. FAA–2020–0455; Product Identifier 2019–SW–105–AD; Amendment 39–21130; AD 2020–11–05]

RIN 2120–AA64

Airworthiness Directives; Airbus Helicopters

AGENCY: Federal Aviation Administration (FAA), DOT.

ACTION: Final rule; request for comments.

SUMMARY: The FAA is adopting a new airworthiness directive (AD) for all Airbus Helicopters Model EC120B helicopters. This AD was prompted by a report of recurrent loss of tightening torque on several attachment bolts of the tail rotor hub body. This AD requires repetitive inspections of the tail rotor hub body for cracks and applicable corrective actions if necessary, and repetitive replacement of the attachment bolts, washers, and nuts of the tail rotor hub body. The FAA is issuing this AD to address the unsafe condition on these products.

DATES: This AD becomes effective June 8, 2020.

The Director of the Federal Register approved the incorporation by reference of a certain publication listed in this AD as of June 8, 2020.

The FAA must receive comments on this AD by July 6, 2020.

ADDRESSES: You may send comments, using the procedures found in 14 CFR 11.43 and 11.45, by any of the following methods:

- *Federal eRulemaking Portal:* Go to *https://www.regulations.gov.* Follow the instructions for submitting comments.
- *Fax:* 202–493–2251.
- *Mail:* U.S. Department of Transportation, Docket Operations, M–30, West Building Ground Floor, Room W12–140, 1200 New Jersey Avenue SE, Washington, DC 20590.
- *Hand Delivery:* U.S. Department of Transportation, Docket Operations, M–30, West Building Ground Floor, Room W12–140, 1200 New Jersey Avenue SE, Washington, DC, between 9 a.m. and 5 p.m., Monday through Friday, except Federal holidays.

For service information identified in this final rule, contact Airbus Helicopters, 2701 N Forum Drive, Grand Prairie, TX 75052; telephone 972–641–0000 or 800–232–0323; fax 972–641–3775; or at *https://www.airbus.com/helicopters/services/technical-support.html.* You may view this service information at the FAA, Office of the Regional Counsel, Southwest Region, 10101 Hillwood Pkwy., Room 6N–321, Fort Worth, TX 76177. It is also available on the internet at *https://www.regulations.gov* by searching for and locating Docket No. FAA–2020–0455.

Examining the AD Docket

You may examine the AD docket on the internet at *https://www.regulations.gov* by searching for and locating Docket No. FAA–2020–0455; or in person at Docket Operations between 9 a.m. and 5 p.m., Monday through Friday, except Federal holidays. The AD docket contains this AD, the European Union Aviation Safety Agency (EASA) AD, any service information that is incorporated by reference, any comments received, and other information. The street address for Docket Operations is listed above. Comments will be available in the AD docket shortly after receipt.

FOR FURTHER INFORMATION CONTACT: Kathleen Arrigotti, Aerospace Engineer, Large Aircraft Section, International Validation Branch, FAA, 2200 South 216th St., Des Moines, WA 98198; telephone and fax 206–231–3218; email *Kathleen.Arrigotti@faa.gov.*

SUPPLEMENTARY INFORMATION:

Discussion

EASA, which is the Technical Agent for the Member States of the European Union, has issued EASA AD 2019–0272R1, dated November 18, 2019 (referred to after this as the Mandatory Continuing Airworthiness Information or ''the MCAI''), to correct an unsafe condition for all Airbus Helicopters EC120B helicopters. EASA advises that an inspection of the tail rotor hub body revealed a recurring loss of tightening torque on several attachment bolts. EASA advises that this condition, if not detected and corrected, could lead to cracking and potential loss of the tail rotor drive and consequent loss of yaw control of the helicopter. The MCAI requires repetitive inspections of the tail rotor hub body for cracks and applicable corrective actions if necessary, as well as repetitive replacement of the associated attachment bolts, washers, and nuts.

You may examine the MCAI in the AD docket on the internet at *https://www.regulations.gov* by searching for and locating Docket No. FAA–2020–0455.

Related Service Information Under 1 CFR Part 51

Airbus Helicopters has issued Emergency Alert Service Bulletin 05A020, Revision 1, dated November 8, 2019. This service information describes procedures for repetitive inspections of the tail rotor hub body for cracks and applicable corrective actions if necessary, and repetitive replacement of the attachment bolts, washers, and nuts of the tail rotor hub body. Corrective actions include replacing the tail rotor hub body and associated bolts, washers, and nuts, and an inspection of the splined flange and the tail rotor hub body, and, if necessary, replacing the splined flange.

This service information is reasonably available because the interested parties

have access to it through their normal course of business or by the means identified in the **ADDRESSES** section.

Other Related Service Information

Airbus Helicopters has issued Emergency Alert Service Bulletin 05A020, Revision 0, dated October 29, 2019. The actions specified in this service bulletin are the same as those specified in Airbus Helicopters Emergency Alert Service Bulletin 05A020, Revision 1, dated November 8, 2019. However, Airbus Helicopters Emergency Alert Service Bulletin 05A020, Revision 1, dated November 8, 2019, revised the compliance time for repetitive inspections of the tail rotor hub body for cracks from within every 15 hours time-in-service (TIS) but not to exceed 7 days, to within every 15 hours TIS.

Airbus has issued ''Detailed Check—Splined Flange,'' Task 64–21–00, 6–5, Airbus Aircraft Maintenance Manual (AMM), Version B, dated April 7, 2014. This service information describes inspection criteria and inspection areas for a detailed check of the tail rotor splined flange.

FAA's Determination

This product has been approved by the aviation authority of another country, and is approved for operation in the United States. Pursuant to the FAA's bilateral agreement with the State of Design Authority, the FAA has been notified of the unsafe condition described in the MCAI and service information referenced above. The FAA is issuing this AD after evaluating all pertinent information and determining the unsafe condition exists and is likely to exist or develop on other products of the same type design.

Requirements of This AD

This AD requires accomplishing the actions specified in the service information described previously, except as discussed under ''Differences Between this AD and the MCAI or Service Information.''

Differences Between This AD and the MCAI

Where Note 1 of the MCAI allows a non-cumulative tolerance of 100 hours TIS to be applied to the compliance times for the initial replacement of bolts, washers, and nuts (Table 1 of the MCAI) to allow for synchronization of the required inspections with other maintenance tasks, this AD does not allow a non-cumulative tolerance of 100 hours TIS to be applied to the compliance times for the initial replacement of bolts, washers, and nuts (Figure 3 to paragraph (j) of this AD).

FAA's Justification for Immediate Adoption and Determination of the Effective Date

Section 553(b)(3)(B) of the Administrative Procedure Act (APA) (5 U.S.C.) authorizes agencies to dispense with notice and comment procedures for rules when the agency, for ''good cause,'' finds that those procedures are ''impracticable, unnecessary, or contrary to the public interest.'' Under this section, an agency, upon finding good cause, may issue a final rule without seeking comment prior to the rulemaking. Similarly, Section 553(d) of the APA authorizes agencies to make rules effective in less than thirty days, upon a finding of good cause.

An unsafe condition exists that requires the immediate adoption of this AD without providing an opportunity for public comments prior to adoption. The FAA has found that the risk to the flying public justifies waiving notice and comment prior to adoption of this rule because recurrent loss of tightening torque on several tail rotor hub body attachment bolts could lead to cracking and potential loss of the tail rotor drive and consequent loss of yaw control of the helicopter. The FAA determined a compliance time of 15 hours TIS or 7 days, whichever occurs first, is required to correct the unsafe condition. This compliance time is shorter than the time necessary for the public to comment and for publication of the final rule.

Accordingly, notice and opportunity for prior public comment are impracticable pursuant to 5 U.S.C. 553(b)(3)(B). In addition, for the reasons stated above, the FAA finds that good cause exists pursuant to 5 U.S.C. 553(d) for making this amendment effective in less than 30 days.

Comments Invited

This AD is a final rule that involves requirements affecting flight safety, and the FAA did not precede it by notice and opportunity for public comment. However, the FAA invites you to send any written relevant data, views, or arguments about this AD. Send your comments to an address listed under the **ADDRESSES** section. Include ''Docket No. FAA–2020–0455; Product Identifier 2019–SW–105–AD'' at the beginning of your comments. The FAA specifically invites comments on the overall regulatory, economic, environmental, and energy aspects of this AD. The FAA will consider all comments received by the closing date and may amend this AD based on those comments.

The FAA will post all comments received, without change, to *https://www.regulations.gov,* including any personal information you provide. The FAA will also post a report summarizing each substantive verbal contact received about this AD.

Regulatory Flexibility Act

The requirements of the Regulatory Flexibility Act (RFA) do not apply when an agency finds good cause pursuant to 5 U.S.C. 553 to adopt a rule without prior notice and comment. Because the FAA has determined that it has good cause to adopt this rule without notice and comment, RFA analysis is not required.

Costs of Compliance

The FAA estimates that this AD affects 90 helicopters of U.S. registry. The FAA estimates the following costs to comply with this AD:

ESTIMATED COSTS FOR REQUIRED ACTIONS

Labor cost	Parts cost	Cost per product	Cost on U.S. operators
1 work-hour × $85 per hour = $85	$0	$85	$7,650

The FAA has received no definitive data that would enable it to provide cost estimates for the on-condition actions specified in this AD.

Authority for This Rulemaking

Title 49 of the United States Code specifies the FAA's authority to issue rules on aviation safety. Subtitle I, section 106, describes the authority of the FAA Administrator. Subtitle VII: Aviation Programs, describes in more detail the scope of the Agency's authority.

The FAA is issuing this rulemaking under the authority described in Subtitle VII, Part A, Subpart III, Section

44701: General requirements. Under that section, Congress charges the FAA with promoting safe flight of civil aircraft in air commerce by prescribing regulations for practices, methods, and procedures the Administrator finds necessary for safety in air commerce. This regulation is within the scope of that authority because it addresses an unsafe condition that is likely to exist or develop on products identified in this rulemaking action.

Regulatory Findings

The FAA determined that this AD will not have federalism implications under Executive Order 13132. This AD will not have a substantial direct effect on the States, on the relationship between the national government and the States, or on the distribution of power and responsibilities among the various levels of government.

For the reasons discussed above, I certify that this AD:

(1) Is not a ''significant regulatory action'' under Executive Order 12866 and

(2) Will not affect intrastate aviation in Alaska.

List of Subjects in 14 CFR Part 39

Air transportation, Aircraft, Aviation safety, Incorporation by reference, Safety.

Adoption of the Amendment

Accordingly, under the authority delegated to me by the Administrator, the FAA amends 14 CFR part 39 as follows:

PART 39—AIRWORTHINESS DIRECTIVES

■ 1. The authority citation for part 39 continues to read as follows:

Authority: 49 U.S.C. 106(g), 40113, 44701.

§ 39.13 [Amended]

■ 2. The FAA amends § 39.13 by adding the following new airworthiness directive (AD):

2020–11–05 Airbus Helicopters: Amendment 39–21130; Docket No. FAA–2020–0455; Product Identifier 2019–SW–105–AD.

(a) Effective Date

This AD becomes effective June 8, 2020.

(b) Affected ADs

None.

(c) Applicability

This AD applies to Airbus Helicopters Model EC120B helicopters, certificated in any category, all serial numbers.

(d) Subject

Joint Aircraft Service Component (JASC) Code 6400, Tail rotor system.

(e) Reason

This AD was prompted by a report of recurrent loss of tightening torque on several attachment bolts on the tail rotor hub body. The FAA is issuing this AD to address this condition, which could lead to cracking and potential loss of the tail rotor drive and consequent loss of yaw control of the helicopter.

(f) Compliance

Comply with this AD within the compliance times specified, unless already done.

(g) Definitions

(1) For the purposes of this AD, an affected part is any tail rotor hub body part number C642A0100103.

(2) For the purposes of this AD, a serviceable part is any affected part that is new (not previously installed on any helicopter); or any affected part on which an inspection has been done as specified in the instructions of Airbus Helicopters Emergency Alert Service Bulletin 05A020, Revision 0, dated October 29, 2019, or Airbus Helicopters Emergency Alert Service Bulletin 05A020, Revision 1, dated November 8, 2019, and there were no cracks.

(h) Repetitive Inspection of the Tail Rotor Hub Body

Within 15 hours time-in-service (TIS) or 7 days, whichever occurs first after the effective date of this AD: Inspect the affected part (as defined in paragraph (g)(1) of this AD) for cracking in accordance with the instructions of section 3.B.2 of Airbus Helicopters Emergency Alert Service Bulletin 05A020, Revision 1, dated November 8, 2019. Thereafter, repeat the inspection at intervals not to exceed 15 hours TIS.

(i) Corrective Actions

(1) If, during any inspection required by paragraph (h) of this AD, there are any cracks, before next flight, replace the tail rotor hub body with a serviceable part (as defined in paragraph (g)(2) of this AD) and replace the bolts, washers, and nuts with new bolts, washers, and nuts, in accordance with the instructions of section 3.B.3 of Airbus Helicopters Emergency Alert Service Bulletin 05A020, Revision 1, dated November 8, 2019, and inspect the tail rotor splined flange for the conditions identified in figure 1 to paragraph (i)(1) of this AD and at the areas identified in figure 2 to paragraph (i)(1) of this AD in accordance with the instructions of section 1.E.2 of Airbus Helicopters Emergency Alert Service Bulletin 05A020, Revision 1, dated November 8, 2019.

Note 1 to paragraph (i)(1): You may refer to ''Detailed Check—Splined Flange,'' Task 64–21–00, 6–5, Airbus Aircraft Maintenance Manual (AMM) Version B, dated April 7, 2014, which pertains to the tail rotor splined flange inspection.

Figure 1 to paragraph (i)(1) – *Inspection Criteria for Tail Rotor Splined Flange*

Location as specified in figure 2 to paragraph (i)(1) of this AD	Maximum damage, which causes replacement (E1, Dia. 2, and Dia. 3 are shown in figure 2 to paragraph (i)(1) of this AD)
Zone A	Score, depth more than 0.2 millimeters (mm) (0.008 in.) Crack E1 less than 2.75 mm (0.108 in.) Dia. 3 more than 6.02 mm (0.2371 in.) Dia. 2 more than 33.03 mm (1.3004 in.)
Zone B	Sanding depth more than 0.1 mm (0.004 in.) Crack
Zone C	Crack Score, depth more than 0.2 mm (0.008 in.)

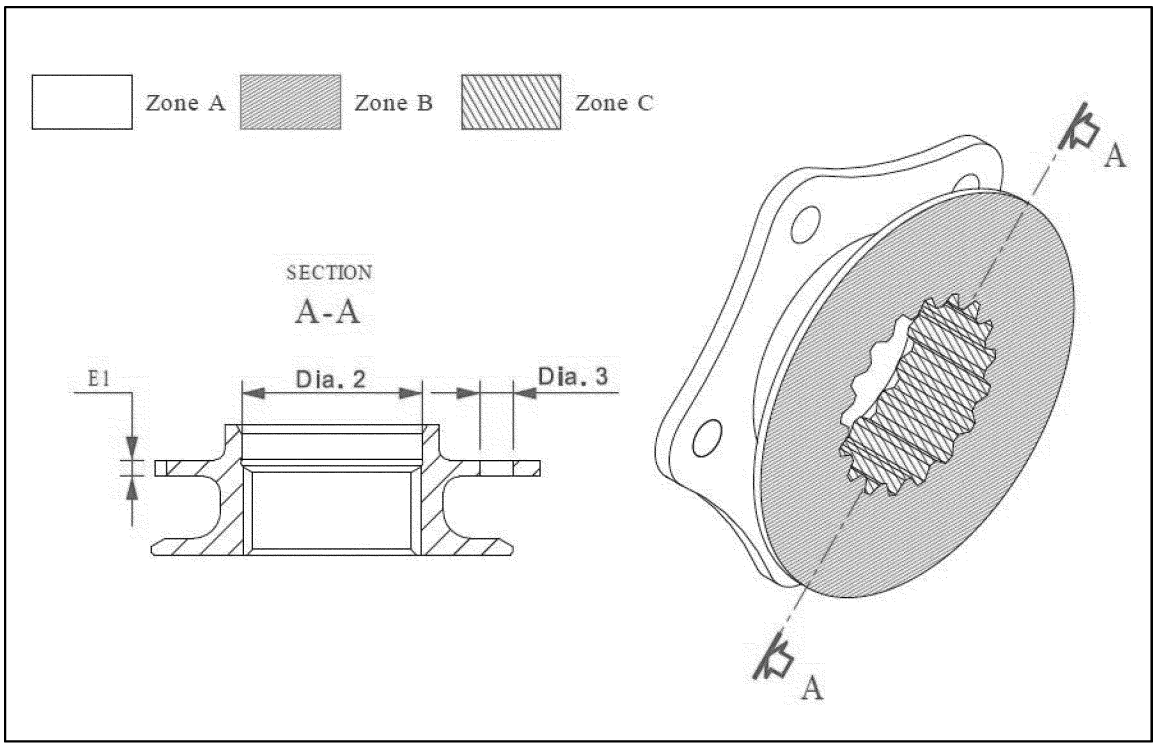

Figure 2 to paragraph (i)(1) – *Inspection Areas of Tail Rotor Splined Flange*

(2) If, during any inspection of the tail rotor splined flange required by paragraph (i)(1) of this AD, the condition of the part exceeds the criteria as specified in figure 1 to paragraph (i)(1) of this AD, before next flight, replace the tail rotor splined flange with an airworthy tail rotor splined flange in accordance with the instructions of section 3.B.4 of Airbus Helicopters Emergency Alert Service Bulletin 05A020, Revision 1, dated November 8, 2019.

(j) Replacement of Attachment Bolts, Washers, and Nuts of the Tail Rotor Hub Body

Within the applicable compliance time specified in figure 3 to paragraph (j) of this AD, replace the attachment bolts, washers,

and nuts of the tail rotor hub body with new bolts, washers, and nuts in accordance with the instructions of Airbus Helicopters Emergency Alert Service Bulletin 05A020, Revision 1, dated November 8, 2019. Thereafter, repeat the replacement of the bolts, washers, and nuts at intervals not to exceed 1,000 hours TIS.

Figure 3 to paragraph (j) – *Initial Replacement of Bolts, Washers and Nuts*

Accumulated Hours TIS on the bolts since first installation on a helicopter	Compliance Time
Less than 9,000 hours TIS	Within 1,000 hours TIS since the initial inspection required by paragraph (h) of this AD was done, without exceeding 9,000 hours TIS on the bolts since first installation on a helicopter
9,000 or more hours TIS, or hours TIS unknown	Within 15 hours TIS or 7 days, whichever occurs first after the effective date of this AD

(k) Parts Installation Limitation

As of the effective date of this AD, it is allowed to install on any helicopter an affected part, provided it is a serviceable part, as defined in paragraph (g) of this AD.

(l) Credit for Previous Actions

This paragraph provides credit for actions required by paragraphs (h) through (j) of this AD, if those actions were performed before the effective date of this AD using Airbus Helicopters Emergency Alert Service Bulletin 05A020, Revision 0, dated October 29, 2019.

(m) Alternative Methods of Compliance (AMOCs)

(1) The Manager, Safety Management Section, Rotorcraft Standards Branch, FAA, may approve AMOCs for this AD. Send your proposal to: Manager, Safety Management Section, Rotorcraft Standards Branch, FAA, 10101 Hillwood Pkwy., Fort Worth, TX 76177; telephone 817–222–5110; email *9-ASW-FTW-AMOC-Requests@faa.gov.*

(2) For operations conducted under a 14 CFR part 119 operating certificate or under 14 CFR part 91, subpart K, notify your principal inspector or lacking a principal inspector, the manager of the local flight standards district office or certificate holding district office, before operating any aircraft complying with this AD through an AMOC.

(n) Related Information

The subject of this AD is addressed in European Union Aviation Safety Agency (EASA) AD 2019–0272R1, dated November 18, 2019. This EASA AD may be found in the AD docket on the internet at *https://www.regulations.gov* by searching for and locating Docket No. FAA–2020–0455.

(o) Material Incorporated by Reference

(1) The Director of the Federal Register approved the incorporation by reference (IBR) of the service information listed in this paragraph under 5 U.S.C. 552(a) and 1 CFR part 51.

(2) You must use this service information as applicable to do the actions required by this AD, unless this AD specifies otherwise.

(i) Airbus Helicopters Emergency Alert Service Bulletin 05A020, Revision 1, dated November 8, 2019.

(ii) [Reserved]

(3) For service information identified in this AD, contact Airbus Helicopters, 2701 N Forum Drive, Grand Prairie, TX 75052; telephone 972–641–0000 or 800–232–0323; fax 972–641–3775; or at *https://www.airbus.com/helicopters/services/technical-support.html.*

(4) You may view this service information at the FAA, Office of the Regional Counsel, Southwest Region, 10101 Hillwood Pkwy., Room 6N–321, Fort Worth, TX 76177.

(5) You may view this service information that is incorporated by reference at the National Archives and Records Administration (NARA). For information on the availability of this material at NARA, email *fedreg.legal@nara.gov,* or go to: *https://www.archives.gov/federal-register/cfr/ibr-locations.html.*

Issued on May 18, 2020.

Gaetano A. Sciortino,

Deputy Director for Strategic Initiatives, Compliance & Airworthiness Division, Aircraft Certification Service.

[FR Doc. 2020–11082 Filed 5–21–20; 8:45 am]

BILLING CODE 4910–13–P

DEPARTMENT OF TRANSPORTATION

Federal Aviation Administration

14 CFR Part 39

[Docket No. FAA–2020–0096; Product Identifier 2019–NM–211–AD; Amendment 39–19913; AD 2020–10–10]

RIN 2120–AA64

Airworthiness Directives; The Boeing Company Airplanes

AGENCY: Federal Aviation Administration (FAA), DOT.

ACTION: Final rule.

SUMMARY: The FAA is superseding Airworthiness Directive (AD) 2016–07–28, which applied to all The Boeing Company Model DC–9–81 (MD–81), DC–9–82 (MD–82), DC–9–83 (MD–83), and DC–9–87 (MD–87) airplanes, and Model MD–88 airplanes. AD 2016–07–28 required repetitive eddy current high frequency (ETHF) inspections for any cracking in the left and right side center wing lower skin, and repair if any crack was found. This AD continues to require repetitive ETHF inspections for any cracking in the left and right side center wing lower skin, and repair if any crack is found. This AD also requires expanding the inspection area to include adjacent stringers with similar stress levels and to perform repetitive inspections with increased sensitivity for crack detection. This AD was prompted by a report of a crack at a certain stringer not addressed by AD 2016–07–28, and cracks at certain other

stringers and associated end fittings, and skins in the center wing fuel tank where the stringers meet the end fittings addressed by AD 2016–07–28. The FAA is issuing this AD to address the unsafe condition on these products.

DATES: This AD is effective June 26, 2020.

The Director of the Federal Register approved the incorporation by reference of a certain publication listed in this AD as of June 26, 2020.

ADDRESSES: For service information identified in this final rule, contact Boeing Commercial Airplanes, Attention: Contractual & Data Services (C&DS), 2600 Westminster Blvd., MC 110–SK57, Seal Beach, CA 90740–5600; telephone 562–797–1717; internet *https://www.myboeingfleet.com.* You may view this service information at the FAA, Airworthiness Products Section, Operational Safety Branch, 2200 South 216th St., Des Moines, WA. For information on the availability of this material at the FAA, call 206–231–3195. It is also available on the internet at *https://www.regulations.gov* by searching for and locating Docket No. FAA–2020–0096.

Examining the AD Docket

You may examine the AD docket on the internet at *https://www.regulations.gov* by searching for and locating Docket No. FAA–2020–0096; or in person at Docket Operations between 9 a.m. and 5 p.m., Monday through Friday, except Federal holidays. The AD docket contains this final rule, any comments received, and other information. The address for Docket Operations is U.S. Department of Transportation, Docket Operations, M–30, West Building Ground Floor, Room W12–140, 1200 New Jersey Avenue SE, Washington, DC 20590.

FOR FURTHER INFORMATION CONTACT: Mohit Garg, Aerospace Engineer, Airframe Section, FAA, Los Angeles ACO Branch, 3960 Paramount Boulevard, Lakewood, CA 90712–4137; phone: 562–627–5264; fax: 562–627–5210; email: *mohit.garg@faa.gov.*

SUPPLEMENTARY INFORMATION:

Discussion

The FAA issued a notice of proposed rulemaking (NPRM) to amend 14 CFR part 39 to supersede AD 2016–07–28, Amendment 39–18473 (81 FR 21253, April 11, 2016) (''AD 2016–07–28''). AD 2016–07–28 applied to all The Boeing Company Model DC–9–81 (MD–81), DC–9–82 (MD–82), DC–9–83 (MD–83), and DC–9–87 (MD–87) airplanes, and Model MD–88 airplanes. The NPRM published in the **Federal Register** on February 13, 2020 (85 FR 8209). The NPRM was prompted by a report of a crack at stringer S–13 which was not addressed by AD 2016–07–28, and by reports of cracks at stringers S–15, S–16, or S–17 and associated end fittings, and skins in the center wing fuel tank where the stringers meet the end fittings, which were addressed by AD 2016–07–28. The NPRM proposed to continue to require repetitive ETHF inspections for any cracking in the left and right side center wing lower skin, and repair if any crack is found. The NPRM also proposed to require expanding the inspection type and area to include repetitive eddy current low frequency (ETLF) inspections of the left and right side fastener holes and the forward and aft skins at certain locations for any cracking. The FAA is issuing this AD to detect and correct cracking in the center wing lower skin. Such cracking could cause structural failure of the wings.

Comments

The FAA gave the public the opportunity to participate in developing this AD. The following represents the comment received on the NPRM and the FAA's response to that comment.

Request To Clarify Actions Since AD 2016–07–28 Was Issued

Boeing requested a correction in the ''Actions Since AD 2016–07–28 Was Issued'' section of the NPRM. Boeing stated that the wording in the section suggests that there have been crack reports for other stringers not addressed in AD 2016–07–28 beyond the single crack report for stringer S–13, and that these additional reports are the reason for expanding the inspection area. Boeing reiterated that AD 2016–07–28 addresses stringers S–15, S–16, and S–17, and, with the exception of the single crack report for stringer S–13, the scope of stringers reported cracked since the issuance of AD 2016–07–28 has not increased.

Boeing contends that the reason for the new ruling is to expand the inspection area to include adjacent stringers with similar stress levels and to perform a new inspection with increased crack detection, as stated in the NPRM. Boeing stated that the first sentence in the ''Actions Since AD 2016–07–28 Was Issued'' section of the NPRM should read, ''Since the FAA issued AD 2016–07–28, a single occurrence of cracking has been found in stringer S–13, which is the only area not addressed by AD 2016–07–28.''

The FAA agrees that the description in the NPRM is inaccurate. Since that section of the preamble does not reappear in the final rule, the requested change to the final rule is not necessary. However, the FAA has changed the **SUMMARY** and Discussion section of the preamble, and paragraph (e) of this AD, to reflect that this AD was prompted by the single crack report at stringer S–13, and that stringer S–13 was not covered by AD 2016–07–28.

Conclusion

The FAA reviewed the relevant data, considered the comment received, and determined that air safety and the public interest require adopting this AD with the changes described previously, and minor editorial changes. The FAA has determined that these minor changes:

- Are consistent with the intent that was proposed in the NPRM for addressing the unsafe condition; and
- Do not add any additional burden upon the public than was already proposed in the NPRM.

The FAA also determined that these changes will not increase the economic burden on any operator or increase the scope of this AD.

Related Service Information Under 1 CFR Part 51

The FAA reviewed Boeing Alert Service Bulletin MD80–57A244, Revision 1, dated October 1, 2019. This service information describes procedures for a general visual inspection (GVI) for existing repairs; repetitive ETLF inspections of the left and right side fastener holes common to stringers 11 through 22 and the forward and aft skins for any crack; repetitive ETHF inspections of the lower skin at stringers 18 through 20 for any crack; an ETHF inspection of the left side and right side center wing lower skin for any crack; and applicable on-condition actions. On-condition actions include repair and an internal GVI for any cracks in stringers 11 through 22 between Xcw=0.0 and Xcw=20.0. This service information is reasonably available because the interested parties have access to it through their normal course of business or by the means identified in the **ADDRESSES** section.

Costs of Compliance

The FAA estimates that this AD affects 288 airplanes of U.S. registry. The FAA estimates the following costs to comply with this AD:

ESTIMATED COSTS FOR REQUIRED ACTIONS

Action	Labor cost	Parts cost	Cost per product	Cost on U.S. operators
Inspection (retained actions from AD 2016-07-28).	14 work-hours × $85 per hour = $1,190 per inspection cycle.	$0	$1,190 per inspection cycle ...	$342,720 per inspection cycle.
Expanded inspection (new action).	Up to 48 work-hours × $85 per hour = Up to $4,080 per inspection cycle.	0	Up to $4,080 per inspection cycle.	Up to $1,175,040 per inspection cycle.

The FAA has received no definitive data that would enable the agency to provide cost estimates for the on-condition actions specified in this AD.

Authority for This Rulemaking

Title 49 of the United States Code specifies the FAA's authority to issue rules on aviation safety. Subtitle I, Section 106, describes the authority of the FAA Administrator. Subtitle VII, Aviation Programs, describes in more detail the scope of the Agency's authority.

The FAA is issuing this rulemaking under the authority described in Subtitle VII, Part A, Subpart III, Section 44701, ''General requirements.'' Under that section, Congress charges the FAA with promoting safe flight of civil aircraft in air commerce by prescribing regulations for practices, methods, and procedures the Administrator finds necessary for safety in air commerce. This regulation is within the scope of that authority because it addresses an unsafe condition that is likely to exist or develop on products identified in this rulemaking action.

Regulatory Findings

The FAA has determined that this AD will not have federalism implications under Executive Order 13132. This AD will not have a substantial direct effect on the States, on the relationship between the national government and the States, or on the distribution of power and responsibilities among the various levels of government.

For the reasons discussed above, I certify that this AD:

(1) Is not a ''significant regulatory action'' under Executive Order 12866,

(2) Will not affect intrastate aviation in Alaska, and

(3) Will not have a significant economic impact, positive or negative, on a substantial number of small entities under the criteria of the Regulatory Flexibility Act.

List of Subjects in 14 CFR Part 39

Air transportation, Aircraft, Aviation safety, Incorporation by reference, Safety.

Adoption of the Amendment

Accordingly, under the authority delegated to me by the Administrator, the FAA amends 14 CFR part 39 as follows:

PART 39—AIRWORTHINESS DIRECTIVES

■ 1. The authority citation for part 39 continues to read as follows:

Authority: 49 U.S.C. 106(g), 40113, 44701.

§ 39.13 [Amended]

■ 2. The FAA amends § 39.13 by removing Airworthiness Directive (AD) 2016–07–28, Amendment 39–18473 (81 FR 21253, April 11, 2016), and adding the following new AD:

2020–10–10 The Boeing Company: Amendment 39–19913; Docket No. FAA–2020–0096; Product Identifier 2019–NM–211–AD.

(a) Effective Date

This AD is effective June 26, 2020.

(b) Affected ADs

This AD replaces AD 2016–07–28, Amendment 39–18473 (81 FR 21253, April 11, 2016) (''AD 2016–07–28'').

(c) Applicability

This AD applies to all The Boeing Company Model DC–9–81 (MD–81), DC–9–82 (MD–82), DC–9–83 (MD–83), and DC–9–87 (MD–87) airplanes, and Model MD–88 airplanes, certificated in any category.

(d) Subject

Air Transport Association (ATA) of America Code 57, Wings.

(e) Unsafe Condition

This AD was prompted by a report of a crack at a certain stringer not addressed by AD 2016–07–28, and cracks at certain other stringers and associated end fittings, and skins in the center wing fuel tank where the stringers meet the end fittings addressed by AD 2016–07–28. The FAA is issuing this AD to detect and correct cracking in the center wing lower skin. Such cracking could cause structural failure of the wings.

(f) Compliance

Comply with this AD within the compliance times specified, unless already done.

(g) Required Actions

Except as specified in paragraph (h) of this AD: At the applicable times specified in paragraph 1.E., ''Compliance,'' of Boeing Alert Service Bulletin MD80–57A244, Revision 1, dated October 1, 2019, do all applicable actions identified as ''RC'' (required for compliance) in, and in accordance with, the Accomplishment Instructions of Boeing Alert Service Bulletin MD80–57A244, Revision 1, dated October 1, 2019.

Note 1 to paragraph (g) of this AD: Boeing Alert Service Bulletin MD80–57A244, Revision 1, dated October 1, 2019, refers to Drawing SN09570007 for certain inspection sequences. If the pages of Drawing SN09570007 are illegible, guidance can be found in Boeing Multi Operator Message MOM–MOM–19–0549–01B, dated October 4, 2019.

(h) Exception to Service Information Specifications

Where Boeing Alert Service Bulletin MD80–57A244, Revision 1, dated October 1, 2019, specifies contacting Boeing for repair instructions or for alternative inspections: This AD requires doing the repair, or doing the alternative inspections and applicable on-condition actions before further flight using a method approved in accordance with the procedures specified in paragraph (i) of this AD.

(i) Alternative Methods of Compliance (AMOCs)

(1) The Manager, Los Angeles ACO Branch, FAA, has the authority to approve AMOCs for this AD, if requested using the procedures found in 14 CFR 39.19. In accordance with 14 CFR 39.19, send your request to your principal inspector or local Flight Standards District Office, as appropriate. If sending information directly to the manager of the certification office, send it to the attention of the person identified in paragraph (j)(1) of this AD. Information may be emailed to: *9-ANM-LAACO-AMOC-Requests@faa.gov.*

(2) Before using any approved AMOC, notify your appropriate principal inspector, or lacking a principal inspector, the manager of the local flight standards district office/certificate holding district office.

(3) An AMOC that provides an acceptable level of safety may be used for any repair, modification, or alteration required by this AD if it is approved by The Boeing Company Organization Designation Authorization (ODA) that has been authorized by the Manager, Los Angeles ACO Branch, FAA, to make those findings. To be approved, the repair method, modification deviation, or

alteration deviation must meet the certification basis of the airplane, and the approval must specifically refer to this AD.

(4) AMOCs approved previously for AD 2016–07–28 are not approved as AMOCs for this AD.

(5) For service information that contains steps that are labeled as Required for Compliance (RC), the provisions of paragraphs (i)(5)(i) and (ii) of this AD apply.

(i) The steps labeled as RC, including substeps under an RC step and any figures identified in an RC step, must be done to comply with the AD. If a step or substep is labeled ''RC Exempt,'' then the RC requirement is removed from that step or substep. An AMOC is required for any deviations to RC steps, including substeps and identified figures.

(ii) Steps not labeled as RC may be deviated from using accepted methods in accordance with the operator's maintenance or inspection program without obtaining approval of an AMOC, provided the RC steps, including substeps and identified figures, can still be done as specified, and the airplane can be put back in an airworthy condition.

(j) Related Information

(1) For more information about this AD, contact Mohit Garg, Aerospace Engineer, Airframe Section, FAA, Los Angeles ACO Branch, 3960 Paramount Boulevard, Lakewood, CA 90712–4137; phone: 562–627–5264; fax: 562–627–5210; email: *mohit.garg@faa.gov.*

(2) Service information identified in this AD that is not incorporated by reference is available at the addresses specified in paragraphs (k)(3) and (4) of this AD.

(k) Material Incorporated by Reference

(1) The Director of the Federal Register approved the incorporation by reference (IBR) of the service information listed in this paragraph under 5 U.S.C. 552(a) and 1 CFR part 51.

(2) You must use this service information as applicable to do the actions required by this AD, unless the AD specifies otherwise.

(i) Boeing Alert Service Bulletin MD80–57A244, Revision 1, dated October 1, 2019.

(ii) [Reserved]

(3) For service information identified in this AD, contact Boeing Commercial Airplanes, Attention: Contractual & Data Services (C&DS), 2600 Westminster Blvd., MC 110 SK57, Seal Beach, CA 90740–5600; telephone 562–797–1717; internet *https://www.myboeingfleet.com.*

(4) You may view this service information at the FAA, Airworthiness Products Section, Operational Safety Branch, 2200 South 216th St., Des Moines, WA. For information on the availability of this material at the FAA, call 206–231–3195.

(5) You may view this service information that is incorporated by reference at the National Archives and Records Administration (NARA). For information on the availability of this material at NARA, email *fedreg.legal@nara.gov,* or go to: *https://www.archives.gov/federal-register/cfr/ibr-locations.html.*

Issued on May 14, 2020.

Gaetano A. Sciortino,

Deputy Director for Strategic Initiatives, Compliance & Airworthiness Division, Aircraft Certification Service.

[FR Doc. 2020–11034 Filed 5–21–20; 8:45 am]

BILLING CODE 4910–13–P

DEPARTMENT OF TRANSPORTATION

Federal Aviation Administration

14 CFR Part 71

[Docket No. FAA–2020–0023; Airspace Docket No. 19–ANM–7]

RIN 2120–AA66

Establishment of Class E Airspace; Harlowton, MT

AGENCY: Federal Aviation Administration (FAA), DOT.

ACTION: Final rule.

SUMMARY: This action establishes Class E airspace at Wheatland County at Harlowton Airport, Harlowton, MT. Two areas are established to contain arriving and departing IFR aircraft operating to/from the airport. The first area extends upward from 700 feet above the surface and the second area extends upward from 1,200 feet above the surface.

DATES: Effective 0901 UTC, July 16, 2020. The Director of the Federal Register approves this incorporation by reference action under Title 1, Code of Federal Regulations part 51, subject to the annual revision of FAA Order 7400.11 and publication of conforming amendments.

ADDRESSES: FAA Order 7400.11D, Airspace Designations and Reporting Points, and subsequent amendments can be viewed online at *https://www.faa.gov//air_traffic/publications/.* For further information, you can contact the Airspace Policy Group, Federal Aviation Administration, 800 Independence Avenue SW, Washington, DC 20591; telephone: (202) 267–8783. The Order is also available for inspection at the National Archives and Records Administration (NARA). For information on the availability of FAA Order 7400.11D at NARA, email *fedreg.legal@nara.gov* or go to *https://www.archives.gov/federal-register/cfr/ibr-locations.html.*

FOR FURTHER INFORMATION CONTACT: Matthew Van Der Wal, Federal Aviation Administration, Western Service Center, Operations Support Group, 2200 S 216th Street, Des Moines, WA 98198; telephone (206) 231–3695.

SUPPLEMENTARY INFORMATION:

Authority for This Rulemaking

The FAA's authority to issue rules regarding aviation safety is found in Title 49 of the United States Code. Subtitle I, Section 106 describes the authority of the FAA Administrator. Subtitle VII, Aviation Programs, describes in more detail the scope of the agency's authority. This rulemaking is promulgated under the authority described in Subtitle VII, Part A, Subpart I, Section 40103. Under that section, the FAA is charged with prescribing regulations to assign the use of airspace necessary to ensure the safety of aircraft and the efficient use of airspace. This regulation is within the scope of that authority as it establishes Class E airspace at Wheatland County at Harlowton Airport, Harlowton, MT, to ensure the safety and management of Instrument Flight Rules (IFR) operations at the airport.

History

The FAA published a notice of proposed rulemaking in the **Federal Register** (85 FR 10625; February 25, 2020) for Docket No. FAA–2020–0023 to establish Class E airspace at Wheatland County at Harlowton Airport, Harlowton, MT. Interested parties were invited to participate in this rulemaking effort by submitting written comments on the proposal to the FAA. One comment was received.

The comment was not germane to the proposed airspace action for the airport. Class E5 airspace designations are published in paragraph 6005 of FAA Order 7400.11D, dated August 8, 2019, and effective September 15, 2019, which is incorporated by reference in 14 CFR 71.1. The Class E airspace designation listed in this document will be published subsequently in the Order.

Availability and Summary of Documents for Incorporation by Reference

This document amends FAA Order 7400.11D, Airspace Designations and Reporting Points, dated August 8, 2019, and effective September 15, 2019. FAA Order 7400.11D is publicly available as listed in the **ADDRESSES** section of this document. FAA Order 7400.11D lists Class A, B, C, D, and E airspace areas, air traffic service routes, and reporting points.

The Rule

This amendment to Title 14 Code of Federal Regulations (14 CFR) part 71 establishes Class E airspace extending upward from 700 feet or more above the surface at Wheatland County at Harlowton Airport, Harlowton, MT. Two airspace areas are established to

contain arriving and departing IFR aircraft operating to/from the airport. The airspace supports the airport's transition from VFR to IFR operations.

The first area extends upward from the 700 feet above the surface and contains IFR departures until reaching 1,200 feet above the surface and IFR arrivals descending below 1,500 feet above the surface. The airspace is described as follows: That airspace extending upward from 700 feet above the surface within a 7.4-mile radius of the airport, and within 2 miles each side of the 279° bearing from the airport, extending from the 7.4-mile radius to 9.3 miles west of the Wheatland County at Harlowton Airport.

The second area extends upward from 1,200 feet above the surface and contains IFR aircraft transitioning to/from the terminal and en route environments. The airspace is described as follows: That airspace extending upward from 1,200 feet above the surface within a 20-mile radius of the Wheatland County at Harlowton Airport.

FAA Order 7400.11, Airspace Designations and Reporting Points, is published yearly and effective on September 15.

Regulatory Notices and Analyses

The FAA has determined that this regulation only involves an established body of technical regulations for which frequent and routine amendments are necessary to keep them operationally current, is non-controversial and unlikely to result in adverse or negative comments. It, therefore: (1) Is not a ''significant regulatory action'' under Executive Order 12866; (2) is not a ''significant rule'' under DOT Regulatory Policies and Procedures (44 FR 11034; February 26, 1979); and (3) does not warrant preparation of a regulatory evaluation as the anticipated impact is so minimal. Since this is a routine matter that will only affect air traffic procedures and air navigation, it is certified that this rule, when promulgated, would not have a significant economic impact on a substantial number of small entities under the criteria of the Regulatory Flexibility Act.

Environmental Review

The FAA has determined that this action qualifies for categorical exclusion under the National Environmental Policy Act in accordance with FAA Order 1050.1F, ''Environmental Impacts: Policies and Procedures,'' paragraph 5–6.5a. This airspace action is not expected to cause any potentially significant environmental impacts, and no extraordinary circumstances exist that warrant preparation of an environmental assessment.

List of Subjects in 14 CFR Part 71

Airspace, Incorporation by reference, Navigation (air).

Adoption of the Amendment

In consideration of the foregoing, the Federal Aviation Administration amends 14 CFR part 71 as follows:

PART 71—DESIGNATION OF CLASS A, B, C, D, AND E AIRSPACE AREAS; AIR TRAFFIC SERVICE ROUTES; AND REPORTING POINTS

■ 1. The authority citation for 14 CFR part 71 continues to read as follows:

Authority: 49 U.S.C. 106(f), 106(g), 40103, 40113, 40120; E.O. 10854, 24 FR 9565, 3 CFR, 1959–1963 Comp., p. 389.

§ 71.1 [Amended]

■ 2. The incorporation by reference in 14 CFR 71.1 of FAA Order 7400.11D, Airspace Designations and Reporting Points, dated August 8, 2019, and effective September 15, 2019, is amended as follows:

Paragraph 6005 Class E Airspace Areas Extending Upward From 700 Feet or More Above the Surface of the Earth.

* * * * *

ANM MT E5 Harlowton, MT

Wheatland County at Harlowton Airport, MT (Lat. 46°26′55″ N, long. 109°51′10″ W)

That airspace extending upward from 700 feet above the surface within a 7.4-mile radius of the airport, and within 2.0 miles each side of the 279° bearing from the airport, extending from the 7.4-mile radius to 9.3 miles west of the airport; and that airspace extending upward from 1,200 feet above the surface within a 20-mile radius of the Wheatland County at Harlowton Airport.

Issued in Seattle, Washington, on May 18, 2020.

Shawn M. Kozica,

Group Manager, Western Service Center, Operations Support Group.

[FR Doc. 2020–11072 Filed 5–21–20; 8:45 am]

BILLING CODE 4910–13–P

DEPARTMENT OF COMMERCE

Bureau of Economic Analysis

15 CFR Part 801

[200507–0130]

RIN 0691–AA90

International Services Surveys: BE–180 Benchmark Survey of Financial Services Transactions Between U.S. Financial Services Providers and Foreign Persons

AGENCY: Bureau of Economic Analysis, Commerce.

ACTION: Final rule.

SUMMARY: This final rule amends regulations of the Department of Commerce's Bureau of Economic Analysis (BEA) to renew reporting requirements for the mandatory BE–180 Benchmark Survey of Financial Services Transactions between U.S. Financial Services Providers and Foreign Persons. This survey applies to the 2019 fiscal reporting year. This mandatory benchmark survey, conducted under the authority of the International Investment and Trade in Services Survey Act, covers the universe of transactions in financial services and is BEA's most comprehensive survey of such transactions. For the 2019 benchmark survey, BEA is making several changes in the data items collected and the design of the survey form.

DATES: This final rule is effective June 12, 2020.

FOR FURTHER INFORMATION CONTACT: Christopher Stein, Chief, Services Surveys Branch (BE–50), Balance of Payments Division, Bureau of Economic Analysis, U.S. Department of Commerce, 4600 Silver Hill Rd., Washington, DC 20233; email *christopher.stein@bea.gov* or phone (301) 278–9189.

SUPPLEMENTARY INFORMATION: On February 25, 2020, BEA published a notice of proposed rulemaking that set forth the revised reporting criteria for the BE–180 Benchmark Survey of Financial Services Transactions between U.S. Financial Services Providers and Foreign Persons (85 FR 10628). This final rule amends 15 CFR part 801 to set forth the reporting requirements for the BE–180 Benchmark Survey of Financial Services Transactions between U.S. Financial Services Providers and Foreign Persons.

The BE–180 Benchmark Survey of Financial Services Transactions between U.S. Financial Services Providers and Foreign Persons is a

mandatory survey and is conducted once every five years by BEA under the authority provided by the International Investment and Trade in Services Survey Act (Pub. L. 94–472, 90 Stat. 2059, 22 U.S.C. 3101–3108, as amended) (the Act), and by Section 5408 of the Omnibus Trade and Competitiveness Act of 1988 (15 U.S.C. 4908(b)). The Act provides that data reported to BEA on this survey are confidential and may be used only for analytical and statistical purposes. Without prior written permission from the survey respondent, the data collected cannot be presented in a manner that allows individual responses to be identified. An individual respondent's report cannot be used for purposes of taxation, investigation, or regulation. Copies retained by BEA are exempt from legal process. Per the Federal Cybersecurity Enhancement Act of 2015 (Division N, Title II, Subtitle B, Pub. L. 114–113), a respondent's data are protected from cybersecurity risks through security monitoring of the BEA information systems.

A response is required from persons subject to the reporting requirements of the BE–180, whether or not they are contacted by BEA, to ensure complete coverage of transactions in financial services between U.S. persons (any individual or organization subject to the jurisdiction of the United States) and foreign persons.

In 2012, BEA established regulatory guidelines for collecting data on international trade in services and direct investment (77 FR 24373; April 24, 2012). This final rule, as published, would amend those regulations to require a response from persons subject to the reporting requirements of the BE–180, whether or not they are contacted by BEA.

The BE–180 benchmark survey is intended to cover the universe of financial services transactions of U.S. financial services companies with foreign persons and is BEA's most comprehensive survey of such transactions. In nonbenchmark years, the universe of estimates covering these transactions are derived from the sample data reported on BEA's BE–185 Quarterly Survey of Financial Services Transactions between U.S. Financial Services Providers and Foreign Persons. The BE–185 and the BE–180 collect similar information. BEA uses cutoff sampling for the BE–185, meaning that respondents must report on the BE–185 only if they had combined sales to foreign persons that exceeded $20 million or combined purchases from foreign persons that exceeded $15 million in any one of the 10 covered financial services transaction categories during fiscal year 2019. The sample of respondents that file on a quarterly basis throughout fiscal year 2019 will also be required to report on the 2019 BE–180 survey. BEA reconciles the annual data from the BE–180 survey with the quarterly data reported on the BE–185 survey by comparing quarterly to annual submissions that are typically completed using audited information.

The benchmark data, which includes data from respondents not subject to filing on an ongoing quarterly basis, will be used, in conjunction with quarterly data collected on the companion BE–185 survey, to produce quarterly estimates of financial services transactions for BEA's international transactions accounts, national income and product accounts, and industry accounts. The data collected through the BE–180 are also used to monitor U.S. trade in financial services, to analyze the impact of U.S. trade in financial services on the U.S. economy and on foreign economies, to compile and improve the U.S. economic accounts, to support U.S. commercial policy on trade in services, to conduct trade promotion activities, and to improve the ability of U.S. businesses to identify and evaluate market opportunities.

A full list of the financial services transactions covered by the BE–180 survey can be found in the regulatory text of this final rule in new § 801.13(g). This includes brokerage services, underwriting and private placement services related to equity transactions and debt transactions, financial management services, credit-related services, credit card services, financial advisory and custody services, securities lending services, electronic funds transfer services, and other financial services.

Description of Changes

This final rule amends the regulations at 15 CFR part 801 by adding new § 801.13 to set forth the reporting requirements for the BE–180 benchmark survey, and amends the survey form for the BE–180 benchmark survey to satisfy changing data needs and to improve data quality and the effectiveness and efficiency of data collections. These amendments include several changes in data items collected and the design of the survey form relative to the 2014 benchmark survey.

BEA changes the reporting requirements for respondents with transactions in covered services below the threshold for mandatory reporting on the schedule(s) of the survey ($3 million in combined sales and/or purchases for fiscal year 2019). For the 2019 BE–180, *all* respondents, regardless of the amount of their transactions in covered services are required to provide a total dollar amount for their sales and purchases, as applicable, *by transaction type.*

BEA adds the following items to the benchmark survey form:

(1) *Question to request the Legal Entity Identifier (LEI) of the survey respondent.* Respondents will be asked to provide their 20-digit LEI, if they have one. Obtaining an LEI is not required for the purpose of filing the survey.

(2) *Questions to collect financial management transactions by type of account.* Respondents who had financial management transactions during the fiscal year will be required to disaggregate these transactions, for both sales and purchases, as applicable, by type of account (for example, mutual funds; pension funds; exchange-traded funds; private equity funds; corporate portfolio; individual portfolio; hedge funds; and trusts).

(3) *Questions about the timing of performance fees.* Respondents who had financial management transactions during fiscal year 2019 will be required to provide additional information about whether these transactions included fees that are tied to performance and, if so, about the timing of those performance fees. Respondents with performance fees (receipts and/or payments) during fiscal year 2019 will be required to distribute them, in a table, based on the quarter(s) in which they were received and/or paid.

(4) *Mandatory questions to collect information on financial services that were conducted remotely, e.g., where both the supplier and the consumer were in different territories when the service was delivered.* This information will be collected for both sales of services performed remotely for foreign persons and for purchases of services performed remotely by foreign persons. For transactions in the financial services categories covered by the survey, respondents will be required to check one of several boxes identifying the percentage of their transactions that were conducted remotely, and to identify if this information was sourced from their accounting records or from recall/general knowledge. Respondents will also be required to check one of two boxes identifying how the remainder of the services not reported as 100% remotely transacted were typically performed (*e.g.,* by the provider traveling to the consumer or by the consumer traveling to the provider).

(5) *A question to identify respondents engaged in transactions related to*

cryptocurrency. BEA adds a single question asking respondents to identify, of their 2019 cross-border financial services reported in the required transaction categories, if any were related to cryptocurrency activities.

In addition, BEA has redesigned the format and wording of the survey. The new survey design incorporates improvements that have been made to other BEA surveys. Some improvements are the result of a recent review conducted with selected survey respondents during the planning for the 2017 BE–120 Benchmark Survey of Transactions in Selected Services and Intellectual Property with Foreign Persons. BE–180 Benchmark Survey instructions and data item descriptions have been changed to improve clarity and ensure that the survey form is consistent with other BEA surveys.

Change to the Regulatory Text of the Proposed Rule

BEA received one comment on the proposed rule which was generally supportive of the rule. The commenter made one suggestion which was outside of the scope of this rulemaking which may be considered for future applications.

We note that we have made a change to paragraph (h), entitled ''*Due date*'', in new § 801.13, as found in the regulatory text of the proposed rule. The phrase ''July 31, 2020 (or by August 31, 2020 for respondents that use BEA's eFile system)'' has been replaced with ''September 30, 2020 (or by October 30, 2020 for respondents that use BEA's eFile system).'' BEA made this change in this final rule to provide respondents additional time to comply with the requirements of the new section.

Executive Order 12866

This final rule has been determined to be not significant for purposes of Executive Order 12866. This rule is not an Executive Order 13771 regulatory action because this rule is not significant for purposes of Executive Order 12866.

Executive Order 13132

This final rule does not contain policies with Federalism implications sufficient to warrant preparation of a Federalism assessment under Executive Order 13132.

Paperwork Reduction Act

The collection-of-information in this final rule was submitted to the Office of Management and Budget (OMB) pursuant to the Paperwork Reduction Act of 1995, 44 U.S.C. 3501–3520 (PRA). OMB approved the reinstatement, with change, of the information collection under OMB control number 0608–0062.

Notwithstanding any other provisions of law, no person is required to respond to, nor shall any person be subject to a penalty for failure to comply with, a collection of information subject to the requirements of the PRA unless that collection displays a currently valid OMB control number.

The BE–180 survey is expected to result in the filing of reports from approximately 7,000 respondents. Approximately 5,500 respondents would report mandatory data on the survey, and approximately 1,500 would file exemption claims. The respondent burden for this collection of information would vary from one respondent to another, but is estimated to average (1) 11 hours for the 1,875 respondents that file mandatory or voluntary data by country and affiliation for relevant transaction types on the mandatory schedules; (2) 2 hours for the 3,625 respondents that file mandatory data by transaction type but not by country or affiliation; and (3) 1 hour for the 1,500 exemption claims. These burden-hour estimates consider time for reviewing instructions, searching existing data sources, gathering and maintaining the data needed, and completing and reviewing the collection of information. Thus, the total respondent burden for this survey is estimated at 29,375 hours, or approximately 4 hours per response (29,375 hours/7,000 respondents), compared to 27,500 hours, or about 3 hours per response (27,500 hours/8,750 respondents) for the 2014 BE–180 benchmark survey. The increase in burden hours is due to estimated changes in the expected response composition of the respondent universe from 2014 to 2019, as well as changes in the content of the survey.

Written comments regarding the burden-hour estimates or other aspects of the collection-of-information requirements contained in the final rule should be sent to both BEA via email at *Christopher.Stein@bea.gov* and to OMB, O.I.R.A., Paperwork Reduction Project 0608–0073, Attention PRA Desk Officer for BEA, Kerrie Leslie, via email at *OIRA_Submission@omb.eop.gov.*

Regulatory Flexibility Act

The Chief Counsel for Regulation, Department of Commerce, certified to the Chief Counsel for Advocacy, Small Business Administration, at the proposed rule stage that this action will not have a significant economic impact on a substantial number of small entities. No comments were received on that certification or on the economic impacts of this rule more generally. Therefore, no regulatory flexibility analysis is required and none has been prepared.

List of Subjects in 15 CFR Part 801

Economic statistics, Foreign trade, International transactions, Penalties, Reporting and recordkeeping requirements.

Dated: May 7, 2020.

Paul W. Farello,

Associate Director of International Economics, Bureau of Economic Analysis.

For reasons set forth in the preamble, BEA amends 15 CFR part 801 as follows:

PART 801—SURVEY OF INTERNATIONAL TRADE IN SERVICES BETWEEN U.S. AND FOREIGN PERSONS AND SURVEYS OF DIRECT INVESTMENT

■ 1. The authority citation for 15 CFR part 801 continues to read as follows:

Authority: 5 U.S.C. 301; 15 U.S.C. 4908; 22 U.S.C. 3101–3108; E.O. 11961 (3 CFR, 1977 Comp., p. 86), as amended by E.O. 12318 (3 CFR, 1981 Comp. p. 173); and E.O. 12518 (3 CFR, 1985 Comp. p. 348).

■ 2. Revise § 801.3 to read as follows:

§ 801.3 Reporting requirements.

Except for surveys subject to rulemaking in §§ 801.7, 801.8, 801.9, 801.10, 801.11, 801.12, and 801.13, reporting requirements for all other surveys conducted by the Bureau of Economic Analysis shall be as follows:

(a) Notice of specific reporting requirements, including who is required to report, the information to be reported, the manner of reporting, and the time and place of filing reports, will be published by the Director of the Bureau of Economic Analysis in the **Federal Register** prior to the implementation of a survey;

(b) In accordance with section 3104(b)(2) of title 22 of the United States Code, persons notified of these surveys and subject to the jurisdiction of the United States shall furnish, under oath, any report containing information which is determined to be necessary to carry out the surveys and studies provided for by the Act; and

(c) Persons not notified in writing of their filing obligation by the Bureau of Economic Analysis are not required to complete the survey.

■ 3. Add § 801.13 to read as follows:

§ 801.13 Rules and regulations for the BE–180 Benchmark Survey of Financial Services Transactions between U.S. Financial Services Providers and Foreign Persons—2019.

The BE–180 Benchmark Survey of Financial Services Transactions between U.S. Financial Services Providers and Foreign Persons will be conducted covering fiscal year 2019. All legal authorities, provisions, definitions, and requirements contained in §§ 801.1 and 801.2 and 801.4 through 801.6 are applicable to this survey. Specific additional rules and regulations for the BE–180 survey are given in paragraphs (a) through (e) of this section. More detailed instructions are given on the report form and in instructions accompanying the report form.

(a) *Response required.* A response is required from persons subject to the reporting requirements of the BE–180 Benchmark Survey of Financial Services Transactions between U.S. Financial Services Providers and Foreign Persons—2019, contained herein, whether or not they are contacted by BEA. Also, a person, or its agent, that is contacted by BEA about reporting on this survey, either by sending a report form or by written inquiry, must respond in writing pursuant to this section. This may be accomplished by:

(1) Completing and returning the BE–180 by the due date of the survey; or

(2) If exempt, by completing the determination of reporting status section of the BE–180 survey and returning it to BEA by the due date of the survey.

(b) *Who must report.* A BE–180 report is required of each U.S. person that is a financial services provider or intermediary, or whose consolidated U.S. enterprise includes a separately organized subsidiary, or part, that is a financial services provider or intermediary, and that had financial services transactions with foreign persons in the categories covered by the survey during its 2019 fiscal year.

(c) *BE–180 definition of financial services provider.* The definition of financial services provider used for this survey is identical to the definition of the term as used in the North American Industry Classification System, United States, 2012, Sector 52-Finance and Insurance, and holding companies that own or influence, and are principally engaged in making management decisions for these firms (part of Sector 55-Management of Companies and Enterprises). For example, companies and/or subsidiaries and other separable parts of companies in the following industries are defined as financial services providers: Depository credit intermediation and related activities (including commercial banking, savings institutions, credit unions, and other depository credit intermediation); non-depository credit intermediation (including credit card issuing, sales financing, and other non-depository credit intermediation); activities related to credit intermediation (including mortgage and nonmortgage loan brokers, financial transactions processing, reserve, and clearinghouse activities, and other activities related to credit intermediation); securities and commodity contracts intermediation and brokerage (including investment banking and securities dealing, securities brokerage, commodity contracts and dealing, and commodity contracts brokerage); securities and commodity exchanges; other financial investment activities (including miscellaneous intermediation, portfolio management, investment advice, and all other financial investment activities); insurance carriers; insurance agencies, brokerages, and other insurance related activities; insurance and employee benefit funds (including pension funds, health and welfare funds, and other insurance funds); other investment pools and funds (including open-end investment funds, trusts, estates, and agency accounts, real estate investment trusts, and other financial vehicles); and holding companies that own, or influence the management decisions of, firms principally engaged in the aforementioned activities.

(d) *What must be reported.* (1) A U.S. person that had combined sales to, or purchases from, foreign persons that exceeded $3 million in the financial services categories covered by the survey during its 2019 fiscal year, on an accrual basis, is required to provide data on total sales and/or purchases of each of the covered types of financial services and must disaggregate the totals by country and by relationship to the foreign transactor (foreign affiliate, foreign parent group, or unaffiliated). The determination of whether a U.S. financial services provider is subject to this reporting requirement can be based on the judgment of knowledgeable persons in a company who can identify reportable transactions on a recall basis, with a reasonable degree of certainty, without conducting a detailed manual records search.

(2) A U.S. person that had combined sales to, or purchases from, foreign persons that were $3 million or less in the financial services categories covered by the survey during its 2019 fiscal year, on an accrual basis, is required to provide the total sales and/or purchases for each type of transaction in which they engaged. The $3 million threshold for sales and purchases should be applied to financial services transactions with foreign persons by all parts of the consolidated domestic U.S. Reporter. Because the $3 million threshold applies separately to sales and purchases, the mandatory reporting requirement may apply only to sales, only to purchases, or to both.

(e) *Voluntary reporting of financial services transactions.* If, during fiscal year 2019, combined sales and purchases were $3 million or less, on an accrual basis, the U.S. person may, in addition to providing the required total for each type of transaction, report sales at a country and affiliation level of detail on the applicable mandatory schedule(s). The estimates can be judgmental, that is, based on recall, without conducting a detailed records search.

(f) *Exemption claims.* Any U.S. person that receives the BE–180 survey form from BEA, but is not subject to the reporting requirements, must file an exemption claim by completing the determination of reporting status section of the BE–180 survey and returning it to BEA by the due date of the survey. This requirement is necessary to ensure compliance with reporting requirements and efficient administration of the Act by eliminating unnecessary follow-up contact.

(g) *Covered types of financial services.* Financial services covered by the BE–180 survey consist of transactions between U.S. financial services companies and foreign persons for:

(1) Brokerage services related to equity transactions;

(2) Other brokerage services;

(3) Underwriting and private placement services related to equity transactions;

(4) Underwriting and private placement services related to debt transactions;

(5) Financial management services;

(6) Credit-related services, except credit card services;

(7) Credit card services;

(8) Financial advisory and custody services;

(9) Securities lending services;

(10) Electronic funds transfer services; and

(11) Other financial services.

(h) *Due date.* A fully completed and certified BE–180 report, or qualifying exemption claim with the determination of reporting status section completed, is due to be filed with BEA not later than September 30, 2020 (or by October 30, 2020 for respondents that use BEA's eFile system).

[FR Doc. 2020–10166 Filed 5–21–20; 8:45 am]

BILLING CODE 3510–06–P

DEPARTMENT OF HOMELAND SECURITY

U.S. Customs and Border Protection

19 CFR Part 103

[CBP Dec. 20–09]

RIN 1651–AB36

Announcement of Vessel Manifest Confidentiality Online Application and Update of Mailing and Email Addresses for Submission of Vessel Manifest Confidentiality Certifications

AGENCY: U.S. Customs and Border Protection, Department of Homeland Security.

ACTION: Final rule; technical amendment.

SUMMARY: This document makes technical amendments U.S. Customs and Border Protection (CBP) regulations in the Code of Federal Regulations by updating the mailing address and codifying the email address for submitting requests for confidential treatment of vessel manifest certifications. In addition, this document amends the regulations to announce a new way to submit requests for confidential treatment of vessel manifest certifications—via the Vessel Manifest Confidentiality Online Application, an online portal on *www.CBP.gov.* This document also makes other technical conforming changes, specifically updating names and references.

DATES: The final rule is effective May 22, 2020.

FOR FURTHER INFORMATION CONTACT: William G. Jackson, Trade Transformation Office, Office of Trade, *william.g.jackson@cbp.dhs.gov* or (571) 468–5110.

SUPPLEMENTARY INFORMATION:

Background

U.S. Customs and Border Protection's (CBP) regulations implementing the Freedom of Information Act (5 U.S.C. 552a) are contained in part 103 of title 19, Code of Federal Regulations (19 CFR part 103). These regulations prescribe rules governing disclosure and production of documents and information under various circumstances. Subpart C of part 103 contains exceptions to these general disclosure requirements by listing certain information that is subject to restricted access.

Section 103.31 generally provides for limited disclosure of vessel manifests and statistical reports. Section 103.31(d), the subject of this rulemaking, describes a process by which parties can request that CBP keep certain manifest information confidential. For an inward manifest, an importer or consignee may request confidential treatment of its name and address, including identifying marks and numbers. *See* 19 CFR 103.31(d)(1). For an outward manifest, a shipper, or authorized employee or official of the shipper, may request confidential treatment of the shipper's name and address. *See* 19 CFR 103.31(d)(2). Currently, the regulations provide a mailing address to submit confidentiality requests, and parties can also submit their requests via email.

Discussion of Changes

This document amends the regulations to update the mailing address, codify the email address and create an electronic window to submit requests for confidential treatment of vessel manifest information to CBP. For mail submissions, CBP is updating the mailing address to the following: Vessel Manifest Program Manager, Office of Trade (Mail Stop 1354), U.S. Customs and Border Protection, 1801 N Beauregard Street, Alexandria, VA 22311. For email submissions, CBP is codifying the email address, which is *vesselmanifestconfidentiality@cbp.dhs.gov.* Finally, CBP is providing for submissions via an online portal on *www.CBP.gov*, known as the Vessel Manifest Confidentiality Online Application. This new portal allows CBP to review confidentiality requests more efficiently by automating the submission process, reducing the processing time to as little as 24 hours in most cases.

Technical Amendments

Due to the renaming of the U.S. Customs Service to U.S. Customs and Border Protection (CBP), this document amends 19 CFR 103.31 by replacing several references to ''Customs'' with ''CBP.''

This document also amends 19 CFR 103.0 and 103.2 to remove references to 19 CFR 103.35 because § 103.35 no longer exists. On November 22, 2016, the Department of Homeland Security (DHS) revised its Freedom of Information Act regulations,[1] which moved the regulations pertaining to CBP's disclosure procedures for confidential commercial information from 19 CFR 103.35 to the DHS regulations, 6 CFR 5.12. Because of this change, this document makes conforming changes to 19 CFR 103.0 and 103.2.

Inapplicability of Prior Notice and Delayed Effective Date

According to section 553 of the Administrative Procedure Act (APA) (5 U.S.C. 553), rulemaking generally requires prior notice and comment, and a 30-day delayed effective date, subject to specified exceptions. Pursuant to 5 U.S.C. 553(a)(2), matters relating to agency management or personnel are excepted from the requirements of section 553. Additionally, as provided in 5 U.S.C. 553(b)(3)(A) and 553(d)(2), the prior notice and comment and delayed effective date requirements do not apply when agencies promulgate rules concerning agency organization, procedure, or practice.

This final rule does not require prior notice and comment because it relates to agency management and agency organization, procedures, or practice. As explained above, the rule merely updates the methods through which CBP will receive requests for confidential treatment of vessel manifests by updating the mailing address, codifying the email address, and establishing an automated portal on *www.CBP.gov.* Accordingly, this rule does not affect the substantive rights or interests of the public, but merely conforms the regulations to existing agency management and agency procedures and organization.

Executive Orders 12866, 13563, and 13771

Executive Orders 12866 (''Regulatory Planning and Review'') and 13563 (''Improving Regulation and Regulatory Review'') direct agencies to assess the costs and benefits of available regulatory alternatives and, if regulation is necessary, to select regulatory approaches that maximize net benefits (including potential economic, environmental, public health and safety effects, distributive impacts, and equity). Executive Order 13563 emphasizes the importance of quantifying both costs and benefits, of reducing costs, of harmonizing rules, and of promoting flexibility. Executive Order 13771 (''Reducing Regulation and Controlling Regulatory Costs'') directs agencies to reduce regulation and control regulatory costs and provides that ''for every one new regulation issued, at least two prior regulations be identified for elimination, and that the cost of planned regulations be prudently managed and controlled through a budgeting process.''

The Office of Management and Budget (OMB) has not designated this rule as a

[1] Freedom of Information Act Regulations, 81 FR 83625 (Nov. 22, 2016).

''significant regulatory action,'' under section 3(f) of Executive Order 12866. Accordingly, OMB has not reviewed this regulation. This regulation updates the regulations surrounding the process by which an importer, consignee, or shipper [2] may request confidentiality for its vessel manifest, eliminating some of the costs of processing the vessel manifest requests and increasing efficiency by providing an electronic option. This is a deregulatory action under Executive Order 13771,[3] with an estimated net regulatory cost saving of $50,245 on an annualized basis (in 2016 U.S. dollars, using a 7 percent discount rate over a perpetual time horizon and discounted back to 2016).

Currently, certain vessel manifest information is available to the public.[4] However, importers, consignees, and shippers have the option to request that CBP keep certain elements of vessel manifests confidential. These elements include the consignee name and address, notify party name and address, and shipper name(s) and address(es). Importers, consignees, or shippers may choose to keep this information confidential to prevent their competitors from linking their manifest data to their company name(s). Certified requests may be sent by the importer, consignee, or shipper either by hard copy through the mail or by email to CBP, and requests must be renewed every two years.

Though vessel manifest confidentiality requests were formerly sent to CBP's Office of Privacy, as of January 2, 2015, requests should be submitted to CBP's Trade Transformation Office (TTO). However, the current regulations do not reflect this change. The Office of Privacy thus currently forwards all requests received to TTO. This rule amends the vessel manifest confidentiality request regulation by updating the address to which paper requests and renewal requests should be sent. The rule further provides for an electronic window for submitting the confidentiality request. Updating the regulation with the address of the correct office and including the electronic submission window would reduce the overall mailing and processing time for importers, consignees, shippers, and CBP alike.

In prior years, CBP has advised importers that it takes 60–90 days to process manifest confidentiality requests.[5] This was due to a significant backlog of requests.[6] TTO, which is responsible for processing the requests, has cleared the backlog, and processing of paper or email requests now takes no more than five days from receipt.[7] Processing requires that CBP take the information in the request, regardless of how it was submitted, and transcribe it into the Automated Commercial Environment (ACE). With the electronic option described in this rule, processing would take no more than 24 hours, as the system would upload requests into ACE each night.[8]

Approximately 12,000 manifest confidentiality requests are processed each year. Of these, about 90 percent, or 10,800, are sent via email. The remaining 10 percent, or 1,200, are sent by mail. CBP believes that it would continue to process 12,000 of these requests each year,[9] but that most importers and consignees would choose to use the electronic window when it becomes available on publication of this rule due to the increased convenience, reduction in errors, and faster processing time. Submitted identifier information will be instantly validated to ensure it matches the previously submitted information that is already in CBP systems, making the portal easier, faster, and less prone to errors than mail or email submissions. CBP estimates that 95 percent of these requests, or 11,400, would be filed via the electronic portal with this rule.[10] The remaining 600 would continue to be submitted either by mail or email.

This rule would eliminate several costs in processing these vessel manifest requests. Importers, consignees, and shippers would no longer need to pay to print and mail their requests if they choose to use the electronic option over the paper mail-in option. There is no prescribed format for a vessel manifest confidentiality request. It must be certified by the importer, consignee, or shipper and contain the party's Internal Revenue Service Employer Number, if available, as well as the information the party wishes to keep confidential. The majority of requests are therefore only a page or two in length. TTO believes that due to the portal's relative speed, ease of use, and data validation, of the 10 percent of requests currently submitted by the paper mail-in option, about half would move to the electronic option with this rule. Parties who switch would collectively save approximately $330.00 per year on postage.[11] Those parties would also save about $30.00 in printing costs each year.[12]

This rule's electronic option would also benefit importers, consignees, and shippers by reducing processing times and errors, thus mitigating risk to their confidentiality during processing. Historically, processing took anywhere from 60–90 days as CBP worked through a significant backlog in requests. Currently, processing may take up to five days, which would be reduced to 24 hours with the rule's electronic option. Utilizing the electronic option also would not increase the time burden on importers, consignees, and shippers to complete a request as they would submit the same amount of information via the electronic portal as they would provide on their paper-based form. Submitting a request through the electronic window would also eliminate the need for TTO employees to transcribe the requests into ACE manually as they do now, reducing the likelihood of human error.

CBP would see savings as well, primarily because TTO employees would no longer need to manually enter all requests into ACE.[13] Until the

[2] For the purposes of this analysis, a shipper may include an authorized employee or official of the shipper.

[3] *See* OMB's Memorandum, ''Guidance Implementing Executive Order 13771, 'Reducing Regulation and Controlling Regulatory Costs' '' (April 5, 2017).

[4] *See* 19 CFR 103.31.

[5] Source: U.S. Customs and Border Protection, *Trade Information Notice: Automation of the Electronic Vessel Manifest Confidentiality Request.* 2019. Available at *https://www.cbp.gov/document/technical-documentation/electronic-vessel-manifest-confidentiality.* Accessed October 30, 2019.

[6] Source: Correspondence with CBP's Trade Transformation Office on October 29, 2019.

[7] *Id.*

[8] The portal does not reside in ACE. Instead, data is uploaded from the portal to ACE each night.

[9] TTO does believe there is a small chance that request submissions could spike as more importers, consignees, and shippers learn of the new electronic option. However, there is no similar program release to use as a comparison, so there is no way to accurately predict how many more importers, consignees, or shippers might exercise the option of confidentiality only once they can do so through the electronic window.

[10] Source: Correspondence with CBP's Trade Transformation Office on October 29, 2019.

[11] 50 percent × 1,200 mailed requests = 600 requests × first-class postage cost of $0.55 avoided = $330 cost saving. As of October 2019, a first-class stamp for a standard-sized envelope costs $0.55. *See* United States Postal Service, First-Class Mail. Available at *https://www.usps.com/ship/first-class-mail.htm.* Accessed October 30, 2019. Printing cost per page based on: U.S. Department of State. *Supporting Statement for Paperwork Reduction Act Submission OMB Number 1405–0068: Medical History and Examination for Foreign Service.* June 20, 2017. Available at *https://www.reginfo.gov/public/do/PRAViewDocument?ref_nbr=201706-1405-001.* Accessed October 23, 2019.

[12] 50 percent × 1,200 mailed requests = 600 requests × $0.05 printing cost per page avoided = $30 cost saving.

[13] CBP would also need to forward fewer requests from office to office as a result of updating the address to which paper requests can be sent. However, because a small number of importers, consignees, and shippers are expected to continue using the paper option, these savings are negligible.

electronic window is available, all requests, regardless of how they are submitted, are transcribed into ACE. Once the window is available, TTO employees would no longer need to transcribe the 11,400 (95 percent) requests received via the window. The majority of these requests (90 percent) take about 5 minutes (0.0833 hours) to process.[14] The other 10 percent of requests are longer, usually sent in by large corporations with many name and address variations.[15] These requests currently take an average of 30 minutes (0.5 hours) to process.[16] Eliminating the transcription of these requests would save CBP about $115,967 annually based on the current time burdens for TTO employees and their assumed hourly time value of $81.38.[17] Table 1 summarizes the annual cost savings of this rule to importers, consignees, shippers, and CBP.

TABLE 1—TOTAL MONETIZED ANNUAL COST SAVINGS (BENEFITS) OF RULE

[Undiscounted 2020 U.S. dollars]

Party	Savings type	Annual cost savings
Importer/Consignee/Shipper	Postage	$330
Importer/Consignee/Shipper	Printing	30
CBP	Transcription	115,967
Total		116,327

Along with benefits, the rule would introduce some costs. In 2019, CBP incurred $270,177 in costs to set up the electronic submission system, including development, testing, and training.[18] CBP would incur costs of approximately $30,000 per year for ongoing maintenance of the electronic submission system.[19] Importers, consignees, and shippers would not face any new costs from this rule.

Overall, this rule would make the process of requesting vessel manifest confidentiality more efficient for CBP, importers, consignees, and shippers, with minimal ongoing costs. Over a five-year period, this rule would result in an undiscounted net cost saving (*i.e.,* benefit) of $191,458 (see Table 2). Table 3 contains the present value and annualized cost and cost saving amounts for a five-year period of analysis using discount rates of 3 percent and 7 percent. On net, this rule would result in an estimated regulatory cost saving of $31,582 on an annualized basis over a 5 year period (in 2020 US dollars, using a 7 percent discount rate).

TABLE 2—TOTAL MONETIZED NET IMPACTS OF RULE

[Undiscounted 2020 U.S. dollars]

Year	Cost savings	Costs	Net cost savings
1	$116,327	$270,177	−$153,850
2	116,327	30,000	86,327
3	116,327	30,000	86,327
4	116,327	30,000	86,327
5	116,327	30,000	86,327
Total	581,635	390,177	191,458

TABLE 3—TOTAL MONETIZED PRESENT VALUE AND ANNUALIZED NET IMPACTS OF RULE

[5-Year period, 2020 U.S. dollars]

	3% Discount rate		7% Discount rate	
	Present value	Annualized	Present value	Annualized
Cost Savings	$532,741	$116,327	$476,962	$116,327
Costs	370,573	80,916	347,470	84,745
Net Cost Savings	162,169	35,410	129,491	31,582

[14] Source: Correspondence with CBP's Trade Transformation Office on October 29, 2019.

[15] *Id.*

[16] *Id.*

[17] 90 percent × 11,400 transcribed requests = 10,260 shorter transcribed requests × 0.0833-hour transcription time burden to CBP per request = 855-hour (rounded) transcription time burden × assumed $81.38 hourly time value of TTO employees = $69,580 (rounded) time cost saving; 10 percent × 11,400 transcribed requests = 1,140 longer transcribed requests × 0.5-hour transcription time burden to CBP per request = 570-hour (rounded) transcription time burden × assumed $81.38 hourly time value of TTO employees = $46,387 (rounded) time cost saving; $69,580 time cost avoided for shorter requests + $46,387 (rounded) time cost avoided for longer requests = $115,967 total transcription time cost saving. CBP bases the $81.38 hourly wage on the FY 2020 salary, benefits, and non-salary costs (*i.e.,* fully loaded wage) of the national average of CBP Trade and Revenue positions. Source: Email correspondence with CBP's Office of Finance on June 12, 2019.

[18] CBP has adjusted the $266,447 in initial costs to 2020 dollars using the GDP deflator of +1.4%. Source: Bureau of Economic Analysis, ''GDP Deflator.'' Updated April 30, 2020. *https://www.bea.gov/data/prices-inflation/gdp-price-deflator.* Accessed May 8, 2020.

[19] Source: Email correspondence with CBP's Trade Transformation Office on October 22, 2019.

Regulatory Flexibility Act

The Regulatory Flexibility Act (5 U.S.C. 601 *et seq.*), as amended by the Small Business Regulatory Enforcement and Fairness Act of 1996, requires an agency to prepare and make available to the public an initial regulatory flexibility analysis that describes the effect of a proposed rule on small entities (*i.e.,* small businesses, small organizations, and small governmental jurisdictions) when the agency is required to publish a general notice of proposed rulemaking for a rule. Since a general notice of proposed rulemaking is not necessary for this rule, CBP is not required to prepare an initial regulatory flexibility analysis for this rule.

Signing Authority

This document is being issued in accordance with 19 CFR 0.2(a), which provides that the authority of the Secretary of the Treasury with respect to CBP regulations that are not related to customs revenue functions was transferred to the Secretary of Homeland Security pursuant to Section 403(l) of the Homeland Security Act of 2002. Accordingly, this final rule to amend such regulations may be signed by the Secretary of Homeland Security (or his or her delegate).

List of Subjects in 19 CFR Part 103

Administrative practice and procedure, Confidential business information, Courts, Freedom of information, Law enforcement, Privacy, Reporting and recordkeeping requirements.

Amendments to the Regulations

For the reasons set forth above, part 103 of the CBP regulations (19 CFR part 103) is amended as set forth below.

PART 103—AVAILABILITY OF INFORMATION

■ 1. The authority citation for part 103 continues to read in part as follows:

Authority: 5 U.S.C. 301, 552, 552a; 19 U.S.C. 66, 1624; 31 U.S.C. 9701.

Section 103.31 also issued under 19 U.S.C. 1431;

* * * * *

§ 103.0 [Amended]

■ 2. Section 103.0 is amended by removing the phrase ''Except for 19 CFR 103.35, the'' and adding, in its place, the word ''The''.

§ 103.2 [Amended]

■ 3. Section 103.2 is amended by:

■ a. Removing from paragraph (a) the words ''except as provided in paragraph (b) of this section,'';

■ b. Removing the paragraph designation ''(a)'' and the paragraph heading; and

■ c. Removing paragraph (b).

■ 4. Section 103.31 is amended by removing the word ''Customs'' and adding, in its place, the term ''CBP'' in paragraphs (a)(3), (b), and (c) and revising paragraphs (d)(1)(iii) and (iv) and (d)(2)(iii) to read as follows:

§ 103.31 Information on vessel manifests and summary statistical reports.

* * * * *

(d) * * *

(1) * * *

(iii) The certification must be submitted to the Vessel Manifest Program Manager, Office of Trade (Mail Stop 1354), U.S. Customs and Border Protection, 1801 N Beauregard Street, Alexandria, VA 22311; or submitted electronically via an email transmission at *vesselmanifestconfidentiality@cbp.dhs.gov* or via the Vessel Manifest Confidentiality Online Application on CBP's public website, *www.CBP.gov*.

(iv) Each initial certification will be valid for a period of two years from the date of receipt. Renewal certifications should be submitted to the Vessel Manifest Program Manager at least 60 days prior to the expiration of the current certification. Information so certified may be copied, but not published, by the press during the effective period of the certification. An importer or consignee shall be given written notification by CBP of the receipt of its certification of confidentiality.

(2) * * *

(iii) The certification must be submitted to the Vessel Manifest Program Manager, Office of Trade (Mail Stop 1354), U.S. Customs and Border Protection, 1801 N Beauregard Street, Alexandria, VA 22311; or submitted electronically via an email transmission at *vesselmanifestconfidentiality@cbp.dhs.gov* or via the Vessel Manifest Confidentiality Online Application on the CBP's public website, *www.CBP.gov*.

* * * * *

Dated: May 14, 2020.

Mark A. Morgan,

Acting Commissioner, U.S. Customs and Border Protection.

[FR Doc. 2020–10802 Filed 5–21–20; 8:45 am]

BILLING CODE 9111–14–P

DEPARTMENT OF HOMELAND SECURITY

U.S. Customs and Border Protection

19 CFR Chapter I

Notification of Temporary Travel Restrictions Applicable to Land Ports of Entry and Ferries Service Between the United States and Mexico

AGENCY: Office of the Secretary, U.S. Department of Homeland Security; U.S. Customs and Border Protection, U.S. Department of Homeland Security.

ACTION: Notification of continuation of temporary travel restrictions.

SUMMARY: This document announces the decision of the Secretary of Homeland Security (Secretary) to continue to temporarily limit the travel of individuals from Mexico into the United States at land ports of entry along the United States-Mexico border. Such travel will be limited to ''essential travel,'' as further defined in this document.

DATES: These restrictions go into effect at 12 a.m. Eastern Daylight Time (EDT) on May 21, 2020 and will remain in effect until 11:59 p.m. EDT on June 22, 2020.

FOR FURTHER INFORMATION CONTACT: Alyce Modesto, Office of Field Operations, U.S. Customs and Border Protection (CBP) at 202–344–3788.

SUPPLEMENTARY INFORMATION:

Background

On March 24, 2020, DHS published notice of the Secretary's decision to temporarily limit the travel of individuals from Mexico into the United States at land ports of entry along the United States-Mexico border to ''essential travel,'' as further defined in that document.[1] The document described the developing circumstances regarding the COVID–19 pandemic and stated that, given the outbreak and continued transmission and spread of COVID–19 within the United States and globally, the Secretary had determined that the risk of continued transmission and spread of COVID–19 between the United States and Mexico posed a ''specific threat to human life or national interests.'' The Secretary later published a notification continuing

[1] 85 FR 16547 (Mar. 24, 2020). That same day, DHS also published notice of the Secretary's decision to temporarily limit the travel of individuals from Canada into the United States at land ports of entry along the United States-Canada border to ''essential travel,'' as further defined in that document. 85 FR 16548 (Mar. 24, 2020).

such limitations on travel until 11:59 p.m. EDT on May 20, 2020.[2]

The Secretary has continued to monitor and respond to the COVID–19 pandemic. As of May 18, there are over 4.6 million confirmed cases globally, with over 310,000 confirmed deaths.[3] There are over 1.4 million confirmed and probable cases within the United States,[4] over 47,000 confirmed cases in Mexico,[5] and over 76,000 confirmed cases in Canada.[6]

Notice of Action

Given the outbreak and continued transmission and spread of COVID–19 within the United States and globally, the Secretary has determined that the risk of continued transmission and spread of COVID–19 between the United States and Mexico poses an ongoing ''specific threat to human life or national interests.''

U.S. and Mexican officials have mutually determined that non-essential travel between the United States and Mexico poses additional risk of transmission and spread of COVID–19 and places the populace of both nations at increased risk of contracting COVID–19. Moreover, given the sustained human-to-human transmission of the virus, returning to previous levels of travel between the two nations places the personnel staffing land ports of entry between the United States and Mexico, as well as the individuals traveling through these ports of entry, at increased risk of exposure to COVID–19. Accordingly, and consistent with the authority granted in 19 U.S.C. 1318(b)(1)(C) and (b)(2),[7] I have determined that land ports of entry along the U.S.-Mexico border will continue to suspend normal operations and will only allow processing for entry into the United States of those travelers engaged in ''essential travel,'' as defined below. Given the definition of ''essential travel'' below, this temporary alteration in land ports of entry operations should not interrupt legitimate trade between the two nations or disrupt critical supply chains that ensure food, fuel, medicine, and other critical materials reach individuals on both sides of the border.

For purposes of the temporary alteration in certain designated ports of entry operations authorized under 19 U.S.C. 1318(b)(1)(C) and (b)(2), travel through the land ports of entry and ferry terminals along the United States-Mexico border shall be limited to ''essential travel,'' which includes, but is not limited to—

- U.S. citizens and lawful permanent residents returning to the United States;
- Individuals traveling for medical purposes (*e.g.,* to receive medical treatment in the United States);
- Individuals traveling to attend educational institutions;
- Individuals traveling to work in the United States (*e.g.,* individuals working in the farming or agriculture industry who must travel between the United States and Mexico in furtherance of such work);
- Individuals traveling for emergency response and public health purposes (*e.g.,* government officials or emergency responders entering the United States to support federal, state, local, tribal, or territorial government efforts to respond to COVID–19 or other emergencies);
- Individuals engaged in lawful cross-border trade (*e.g.,* truck drivers supporting the movement of cargo between the United States and Mexico);
- Individuals engaged in official government travel or diplomatic travel;
- Members of the U.S. Armed Forces, and the spouses and children of members of the U.S. Armed Forces, returning to the United States; and
- Individuals engaged in military-related travel or operations.

The following travel does not fall within the definition of ''essential travel'' for purposes of this Notification—

- Individuals traveling for tourism purposes (*e.g.,* sightseeing, recreation, gambling, or attending cultural events).

At this time, this Notification does not apply to air, freight rail, or sea travel between the United States and Mexico, but does apply to passenger rail, passenger ferry travel, and pleasure boat travel between the United States and Mexico. These restrictions are temporary in nature and shall remain in effect until 11:59 p.m. EDT on June 22, 2020. This Notification may be amended or rescinded prior to that time, based on circumstances associated with the specific threat.

The Commissioner of U.S. Customs and Border Protection (CBP) is hereby directed to prepare and distribute appropriate guidance to CBP personnel on the continued implementation of the temporary measures set forth in this Notification. The CBP Commissioner may determine that other forms of travel, such as travel in furtherance of economic stability or social order, constitute ''essential travel'' under this Notification. Further, the CBP Commissioner may, on an individualized basis and for humanitarian reasons or for other purposes in the national interest, permit the processing of travelers to the United States not engaged in ''essential travel.''

The Acting Secretary of Homeland Security, Chad F. Wolf, having reviewed and approved this document, is delegating the authority to electronically sign this document to Chad R. Mizelle, who is the Senior Official Performing the Duties of the General Counsel for DHS, for purposes of publication in the **Federal Register**.

Chad R. Mizelle,

Senior Official Performing the Duties of the General Counsel, U.S. Department of Homeland Security.

[FR Doc. 2020–11154 Filed 5–20–20; 4:15 pm]

BILLING CODE 9112–FP–P

[2] 85 FR 22353 (Apr. 22, 2020). That same day, DHS also published notice of the Secretary's decision to continue temporarily limiting the travel of individuals from Canada into the United States at land ports of entry along the United States-Canada border to ''essential travel,'' as further defined in that document. 85 FR 22352 (Apr. 22, 2020).

[3] WHO, Coronavirus disease 2019 (COVID–19) Situation Report—119 (May 18, 2020), available at *https://www.who.int/docs/default-source/coronaviruse/situation-reports/20200518-covid-19-sitrep-119.pdf?sfvrsn=4bd9de25_4.*

[4] CDC, Cases of COVID–19 in the U.S. (last updated May 18, 2020), available at *https://www.cdc.gov/coronavirus/2019-ncov/cases-updates/cases-in-us.html.*

[5] WHO, Coronavirus disease 2019 (COVID–19) Situation Report—119 (May 18, 2020).

[6] *Id.*

[7] 19 U.S.C. 1318(b)(1)(C) provides that ''[n]otwithstanding any other provision of law, the Secretary of the Treasury, when necessary to respond to a national emergency declared under the National Emergencies Act (50 U.S.C. 1601 *et seq.*) or to a specific threat to human life or national interests,'' is authorized to ''[t]ake any . . . action that may be necessary to respond directly to the national emergency or specific threat.'' On March 1, 2003, certain functions of the Secretary of the Treasury were transferred to the Secretary of Homeland Security. *See* 6 U.S.C. 202(2), 203(1). Under 6 U.S.C. 212(a)(1), authorities ''related to Customs revenue functions'' were reserved to the Secretary of the Treasury. To the extent that any authority under section 1318(b)(1) was reserved to the Secretary of the Treasury, it has been delegated to the Secretary of Homeland Security. *See* Treas. Dep't Order No. 100–16 (May 15, 2003), 68 FR 28322 (May 23, 2003). Additionally, 19 U.S.C. 1318(b)(2) provides that ''[n]otwithstanding any other provision of law, the Commissioner of U.S. Customs and Border Protection, when necessary to respond to a specific threat to human life or national interests, is authorized to close temporarily any Customs office or port of entry or take any other lesser action that may be necessary to respond to the specific threat.'' Congress has vested in the Secretary of Homeland Security the ''functions of all officers, employees, and organizational units of the Department,'' including the Commissioner of CBP. 6 U.S.C. 112(a)(3).

DEPARTMENT OF HOMELAND SECURITY

U.S. Customs and Border Protection

19 CFR Chapter I

Notification of Temporary Travel Restrictions Applicable to Land Ports of Entry and Ferries Service Between the United States and Canada

AGENCY: Office of the Secretary, U.S. Department of Homeland Security; U.S. Customs and Border Protection, U.S. Department of Homeland Security.

ACTION: Notification of continuation of temporary travel restrictions.

SUMMARY: This document announces the decision of the Secretary of Homeland Security (Secretary) to continue to temporarily limit the travel of individuals from Canada into the United States at land ports of entry along the United States-Canada border. Such travel will be limited to ''essential travel,'' as further defined in this document.

DATES: These restrictions go into effect at 12 a.m. Eastern Daylight Time (EDT) on May 21, 2020 and will remain in effect until 11:59 p.m. EDT on June 22, 2020.

FOR FURTHER INFORMATION CONTACT: Alyce Modesto, Office of Field Operations, U.S. Customs and Border Protection (CBP) at 202–344–3788.

SUPPLEMENTARY INFORMATION:

Background

On March 24, 2020, DHS published notice of the Secretary's decision to temporarily limit the travel of individuals from Canada into the United States at land ports of entry along the United States-Canada border to ''essential travel,'' as further defined in that document.[1] The document described the developing circumstances regarding the COVID–19 pandemic and stated that, given the outbreak and continued transmission and spread of COVID–19 within the United States and globally, the Secretary had determined that the risk of continued transmission and spread of COVID–19 between the United States and Canada posed a ''specific threat to human life or national interests.'' The Secretary later published a notification continuing such limitations on travel until 11:59 p.m. EDT on May 20, 2020.[2]

The Secretary has continued to monitor and respond to the COVID–19 pandemic. As of May 18, there are over 4.6 million confirmed cases globally, with over 310,000 confirmed deaths.[3] There are over 1.4 million confirmed and probable cases within the United States,[4] over 76,000 confirmed cases in Canada,[5] and over 47,000 confirmed cases in Mexico.[6]

Notice of Action

Given the outbreak and continued transmission and spread of COVID–19 within the United States and globally, the Secretary has determined that the risk of continued transmission and spread of COVID–19 between the United States and Canada poses an ongoing ''specific threat to human life or national interests.''

U.S. and Canadian officials have mutually determined that non-essential travel between the United States and Canada poses additional risk of transmission and spread of COVID–19 and places the populace of both nations at increased risk of contracting COVID–19. Moreover, given the sustained human-to-human transmission of the virus, returning to previous levels of travel between the two nations places the personnel staffing land ports of entry between the United States and Canada, as well as the individuals traveling through these ports of entry, at increased risk of exposure to COVID–19. Accordingly, and consistent with the authority granted in 19 U.S.C. 1318(b)(1)(C) and (b)(2),[7] I have determined that land ports of entry along the U.S.-Canada border will continue to suspend normal operations and will only allow processing for entry into the United States of those travelers engaged in ''essential travel,'' as defined below. Given the definition of ''essential travel'' below, this temporary alteration in land ports of entry operations should not interrupt legitimate trade between the two nations or disrupt critical supply chains that ensure food, fuel, medicine, and other critical materials reach individuals on both sides of the border.

For purposes of the temporary alteration in certain designated ports of entry operations authorized under 19 U.S.C. 1318(b)(1)(C) and (b)(2), travel through the land ports of entry and ferry terminals along the United States-Canada border shall be limited to ''essential travel,'' which includes, but is not limited to—

- U.S. citizens and lawful permanent residents returning to the United States;
- Individuals traveling for medical purposes (*e.g.,* to receive medical treatment in the United States);
- Individuals traveling to attend educational institutions;
- Individuals traveling to work in the United States (*e.g.,* individuals working in the farming or agriculture industry who must travel between the United States and Canada in furtherance of such work);
- Individuals traveling for emergency response and public health purposes (*e.g.,* government officials or emergency responders entering the United States to support federal, state, local, tribal, or territorial government efforts to respond to COVID–19 or other emergencies);
- Individuals engaged in lawful cross-border trade (*e.g.,* truck drivers supporting the movement of cargo between the United States and Canada);
- Individuals engaged in official government travel or diplomatic travel;

[1] 85 FR 16548 (Mar. 24, 2020). That same day, DHS also published notice of the Secretary's decision to temporarily limit the travel of individuals from Mexico into the United States at land ports of entry along the United States-Mexico border to ''essential travel,'' as further defined in that document. 85 FR 16547 (Mar. 24, 2020).

[2] 85 FR 22352 (Apr. 22, 2020). That same day, DHS also published notice of the Secretary's decision to continue temporarily limiting the travel of individuals from Mexico into the United States at land ports of entry along the United States-Mexico border to ''essential travel,'' as further defined in that document. 85 FR 22353 (Apr. 22, 2020).

[3] WHO, Coronavirus disease 2019 (COVID–19) Situation Report—119 (May 18, 2020), available at *https://www.who.int/docs/default-source/coronaviruse/situation-reports/20200518-covid-19-sitrep-119.pdf?sfvrsn=4bd9de25_4.*

[4] CDC, Cases of COVID–19 in the U.S. (last updated May 18, 2020), available at *https://www.cdc.gov/coronavirus/2019-ncov/cases-updates/cases-in-us.html.*

[5] WHO, Coronavirus disease 2019 (COVID–19) Situation Report—119 (May 18, 2020).

[6] *Id.*

[7] 19 U.S.C. 1318(b)(1)(C) provides that ''[n]otwithstanding any other provision of law, the Secretary of the Treasury, when necessary to respond to a national emergency declared under the National Emergencies Act (50 U.S.C. 1601 *et seq.*) or to a specific threat to human life or national interests,'' is authorized to ''[t]ake any . . . action that may be necessary to respond directly to the national emergency or specific threat.'' On March 1, 2003, certain functions of the Secretary of the Treasury were transferred to the Secretary of Homeland Security. *See* 6 U.S.C. 202(2), 203(1). Under 6 U.S.C. 212(a)(1), authorities ''related to Customs revenue functions'' were reserved to the Secretary of the Treasury. To the extent that any authority under section 1318(b)(1) was reserved to the Secretary of the Treasury, it has been delegated to the Secretary of Homeland Security. *See* Treas. Dep't Order No. 100–16 (May 15, 2003), 68 FR 28322 (May 23, 2003). Additionally, 19 U.S.C. 1318(b)(2) provides that ''[n]otwithstanding any other provision of law, the Commissioner of U.S. Customs and Border Protection, when necessary to respond to a specific threat to human life or national interests, is authorized to close temporarily any Customs office or port of entry or take any other lesser action that may be necessary to respond to the specific threat.'' Congress has vested in the Secretary of Homeland Security the ''functions of all officers, employees, and organizational units of the Department,'' including the Commissioner of CBP. 6 U.S.C. 112(a)(3).

• Members of the U.S. Armed Forces, and the spouses and children of members of the U.S. Armed Forces, returning to the United States; and

• Individuals engaged in military-related travel or operations.

The following travel does not fall within the definition of ''essential travel'' for purposes of this Notification—

• Individuals traveling for tourism purposes (*e.g.,* sightseeing, recreation, gambling, or attending cultural events).

At this time, this Notification does not apply to air, freight rail, or sea travel between the United States and Canada, but does apply to passenger rail, passenger ferry travel, and pleasure boat travel between the United States and Canada. These restrictions are temporary in nature and shall remain in effect until 11:59 p.m. EDT on June 22, 2020. This Notification may be amended or rescinded prior to that time, based on circumstances associated with the specific threat.

The Commissioner of U.S. Customs and Border Protection (CBP) is hereby directed to prepare and distribute appropriate guidance to CBP personnel on the continued implementation of the temporary measures set forth in this Notification. The CBP Commissioner may determine that other forms of travel, such as travel in furtherance of economic stability or social order, constitute ''essential travel'' under this Notification. Further, the CBP Commissioner may, on an individualized basis and for humanitarian reasons or for other purposes in the national interest, permit the processing of travelers to the United States not engaged in ''essential travel.''

The Acting Secretary of Homeland Security, Chad F. Wolf, having reviewed and approved this document, is delegating the authority to electronically sign this document to Chad R. Mizelle, who is the Senior Official Performing the Duties of the General Counsel for DHS, for purposes of publication in the **Federal Register**.

Chad R. Mizelle,

Senior Official Performing the Duties of the General Counsel, U.S. Department of Homeland Security.

[FR Doc. 2020–11145 Filed 5–20–20; 4:15 pm]

BILLING CODE 9112–FP–P

DEPARTMENT OF THE TREASURY

Office of Foreign Assets Control

31 CFR Part 541

Zimbabwe Sanctions Regulations

AGENCY: Office of Foreign Assets Control, Treasury.

ACTION: Final rule.

SUMMARY: The Department of the Treasury's Office of Foreign Assets Control (OFAC) is amending the Zimbabwe Sanctions Regulations to remove a general license that authorizes all transactions involving Agricultural Development Bank of Zimbabwe and Infrastructure Development Bank of Zimbabwe as a result of these entities being removed from OFAC's Specially Designated Nationals and Blocked Persons List (SDN List).

DATES: This rule is effective May 22, 2020.

FOR FURTHER INFORMATION CONTACT: OFAC: Assistant Director for Licensing, tel.: 202–622–2480; Assistant Director for Regulatory Affairs, tel.: 202–622–4855; or Assistant Director for Sanctions Compliance & Evaluation, tel.: 202–622–2490.

SUPPLEMENTARY INFORMATION:

Electronic Availability

This document and additional information concerning OFAC are available on OFAC's website (*www.treasury.gov/ofac*).

Background

On July 29, 2004, OFAC issued the Zimbabwe Sanctions Regulations, 31 CFR part 541 (69 FR 45246, July 29, 2004) (the ''Regulations'') as an interim final rule to implement Executive Order (E.O.) 13288 of March 6, 2003 (''Blocking Property of Persons Undermining Democratic Processes or Institutions in Zimbabwe''). Subsequently, E.O. 13391 of November 22, 2005 (''Blocking Property of Additional Persons Undermining Democratic Processes or Institutions in Zimbabwe'') and E.O. 13469 of July 25, 2008 (''Blocking Property of Additional Persons Undermining Democratic Processes or Institutions in Zimbabwe'') were issued pursuant to the national emergency declared in E.O. 13288.

On July 25, 2008, OFAC designated the Agricultural Development Bank of Zimbabwe and the Infrastructure Development Bank of Zimbabwe pursuant to E.O. 13469. At that time, OFAC determined that these entities contributed to the undermining of democratic processes and institutions in Zimbabwe by providing support for Robert Mugabe's regime.

On April 24, 2013, OFAC issued Zimbabwe General License No. 1, authorizing all transactions involving the Agricultural Development Bank of Zimbabwe and the Infrastructure Development Bank of Zimbabwe, subject to certain limitations, and published this general license on its website (*www.treasury.gov/ofac*). On July 9, 2013, OFAC also published this general license in the **Federal Register**.

On July 10, 2014, OFAC amended the Regulations to adopt as a final rule the interim final rule originally issued on July 29, 2004, with changes to implement E.O. 13391 and E.O. 13469, and to incorporate Zimbabwe General License No. 1 into § 541.510 of the Regulations (79 FR 39312, July 10, 2014).

On February 3, 2016, OFAC removed the Agricultural Development Bank of Zimbabwe and the Infrastructure Development Bank of Zimbabwe from the SDN List. This rule amends the Regulations to remove the general license that was located in § 541.510, as authorization is no longer required to engage in transactions with these entities. In addition, OFAC is updating the authorities citation of the Regulations to shorten citations to conform with **Federal Register** guidance.

Public Participation

Because the Regulations involve a foreign affairs function, the provisions of Executive Order 12866 and the Administrative Procedure Act (5 U.S.C. 553) requiring notice of proposed rulemaking, opportunity for public participation, and delay in effective date, as well as the provisions of Executive Order 13771, are inapplicable. Because no notice of proposed rulemaking is required for this rule, the Regulatory Flexibility Act (5 U.S.C. 601–612) does not apply.

Paperwork Reduction Act

The collections of information related to the Regulations are contained in 31 CFR part 501 (the ''Reporting, Procedures and Penalties Regulations''). Pursuant to the Paperwork Reduction Act of 1995 (44 U.S.C. 3507), those collections of information have been approved by the Office of Management and Budget under control number 1505–0164. An agency may not conduct or sponsor, and a person is not required to respond to, a collection of information unless the collection of information displays a valid control number.

List of Subjects in 31 CFR Part 541

Administrative practice and procedure, Banks, banking, Blocking of assets, Credit, Foreign trade, Penalties, Reporting and recordkeeping requirements, Securities, Services, Zimbabwe.

For the reasons set forth in the preamble, the Department of the Treasury's Office of Foreign Assets Control amends 31 CFR part 541 as follows:

PART 541—ZIMBABWE SANCTIONS REGULATIONS

■ 1. The authority citation for part 541 is revised to read as follows:

Authority: 3 U.S.C. 301; 31 U.S.C. 321(b); 50 U.S.C. 1601–1651, 1701–1706; 28 U.S.C. 2461 note; 50 U.S.C. 1705 note; E.O. 13288, 68 FR 11457, 3 CFR, 2003 Comp., p. 186; E.O. 13391, 70 FR 71201, 3 CFR, 2005 Comp., p. 206; E.O. 13469, 73 FR 43841, 3 CFR, 2008 Comp., p. 1025.

Subpart E—Licenses, Authorizations and Statements of Licensing Policy

§ 541.510 [Removed]

■ 2. Remove § 541.510.

Dated: May 15, 2020.

Andrea Gacki,

Director, Office of Foreign Assets Control.

[FR Doc. 2020–11093 Filed 5–21–20; 8:45 am]

BILLING CODE 4810–AL–P

Proposed Rules

Federal Register
Vol. 85, No. 100
Friday, May 22, 2020

This section of the FEDERAL REGISTER contains notices to the public of the proposed issuance of rules and regulations. The purpose of these notices is to give interested persons an opportunity to participate in the rule making prior to the adoption of the final rules.

DEPARTMENT OF AGRICULTURE

Office of the Secretary

7 CFR Part 9

[Docket ID: FSA–2020–0004]

Notice of Funding Availability; Coronavirus Food Assistance Program (CFAP) Additional Commodities Request for Information

AGENCY: Office of the Secretary, USDA.

ACTION: Notice of funding availability; request for comments.

SUMMARY: The Coronavirus Food Assistance Program (CFAP) helps agricultural producers impacted by the effects of the COVID–19 outbreak. As provided in the CFAP regulation, this document requests input to help USDA identify information about additional commodities that are not already identified with payment rates in the CFAP regulation for inclusion in CFAP.

DATES: We will consider comments that we receive on additional commodities by June 22, 2020.

We will consider comments that we receive on the Paperwork Reduction Act by July 21, 2020.

FOR FURTHER INFORMATION CONTACT: William L. Beam, telephone (202) 720–3175; email *Bill.Beam@usda.gov.* Persons with disabilities or who require alternative means for communication (Braille, large print, audio tape, etc.) should contact the USDA Target Center at (202) 720–2600 (voice and TDD).

ADDRESSES: We invite you to submit comments to provide information about additional commodities and comment on the information collection specified in this document. In your comment, specify [Docket ID: FSA–2020–0004], and include the volume, date, and page number of this issue of the **Federal Register.** You may submit comments by either of the following methods:

- *Federal Rulemaking Portal:* Go to *http://www.regulations.gov* and search for Docket ID FSA–2020–0004. Follow the instructions for submitting comments.
- *Mail:* Director, SND, FSA, U.S. Department of Agriculture, 1400 Independence Avenue SW, Stop 0522, Washington, DC 20250–0522.

Comments will be available for viewing online at *http://www.regulations.gov.* In addition, comments will be available for public inspection at the above address during business hours from 8 a.m. to 5 p.m., Monday through Friday, except holidays.

SUPPLEMENTARY INFORMATION: The Coronavirus Aid, Relief, and Economic Security Act (CARES Act; Pub. L. 116–136) provides $9,500,000,000 to the Secretary of Agriculture to provide assistance to agricultural producers impacted by the effects of the COVID–19 outbreak. In accordance with 15 U.S.C. 714b, the Secretary of Agriculture is also using funds of the Commodity Credit Corporation (CCC) to assist producers with the purchase of materials and facilities required in connection with the production and marketing of agricultural commodities, and the removal of surplus commodities from normal marketing channels that may be currently unavailable. At this time, the amount of CCC funds available for these purposes is limited to $6.5 billion. USDA implemented CFAP for certain commodities in the regulation in 7 CFR part 9.

For the purpose of potentially supplementing the commodities listed in the CFAP regulation, this document requests information on agricultural commodities not already included in CFAP, which may be negatively impacted by the COVID–19 pandemic, and for which sufficient information is not currently available to USDA to include them in CFAP. If sufficient information is received and a decision is made to add commodities to the program, USDA will issue another NOFA listing the additional commodities, the respective payment rates, application dates, and any other unique information that producers will need to know for those commodities and the availability of CFAP payments.

CFAP Background

Generally, in order to be eligible for a CFAP payment, a producer must have suffered a 5-percent-or-greater price loss over a specified time resulting from the COVID–19 outbreak or face additional significant marketing costs for inventories—whether caused by lower prices given significant declines in certain types of demand, surplus production, or by disruptions to shipping patterns and the orderly marketing of commodities. In addition, due to the COVID–19 outbreak, many farmers markets, restaurants, and schools have temporarily or permanently closed, thus causing significantly decreased demand for commodities grown by producers that are ordinarily supplied to these places.

The following commodities are included in CFAP as specified in the CFAP regulation in 7 CFR part 9.

Non-specialty crops	Specialty crops	Livestock	Other
Barley (malting)	Almonds	Slaughter cattle—mature cattle	Dairy.
Canola	Apples	Slaughter cattle—fed cattle	Wool.
Corn	Artichokes	Feeder cattle less than 600 pounds.	
Durum wheat	Asparagus	Feeder cattle 600 pounds or more.	
Hard red spring wheat	Avocados	All other cattle.	
Millet	Beans	Pigs.	
Oats	Blueberries	Hogs.	
Sorghum	Broccoli	Lambs and yearlings.	
Soybeans	Cabbage.		
Sunflowers	Cantaloupe.		
Upland cotton	Carrots.		

Non-specialty crops	Specialty crops	Livestock	Other
	Cauliflower. Celery. Corn, sweet. Cucumbers. Eggplant. Garlic. Grapefruit. Kiwifruit. Lemons. Lettuce, iceberg. Lettuce, romaine. Mushrooms. Onions, dry. Onions green. Oranges. Papaya. Peaches. Pears. Pecans. Peppers, bell type. Peppers, other. Potatoes. Raspberries. Rhubarb. Spinach. Squash. Strawberries. Sweet potatoes. Tangerines. Taro. Tomatoes. Walnuts. Watermelons.		

Agricultural commodities that are not listed in the table above and have widely published price data, such as those whose prices are collected by USDA and commodities traded on the futures markets, have been determined as having a minimal price impact due to COVID–19 and are not included in CFAP.

Information regarding producer eligibility, the application process, and calculation of payments is specified in the regulation in 7 CFR part 9. Agricultural commodities included in the regulation were determined by USDA to have incurred a price decline of at least 5 percent between the weeks of January 13–17, 2020, and April 6–9, 2020, for non-specialty crops, and April 6–10, 2020, for all other agricultural commodities.

Potential Additional Commodities for CFAP

One purpose of this document is to request information from the public to assist USDA in determining whether additional agricultural commodities not listed above should be eligible for CFAP. It is not to collect information on commodities already included in CFAP, commodities already excluded from CFAP, or information on non-agricultural products.

USDA requests information about agricultural commodities that the public believes to have suffered a 5-percent-or-greater price loss between the weeks of January 13–17, 2020, and April 6–10, 2020, for specialty crops, and April 6–10, 2020, for all other agricultural commodities. In providing input, please consider the following questions; these questions are not intended to limit the type or amount of information provided. The most helpful and informative information for consideration by USDA is information that describes how the decline in price was determined and documentation of the sources used to make this determination.

(1) What commodities not listed above have suffered a 5-percent-or-greater price loss between January and April 2020 and face additional marketing costs due to COVID–19?

(2) What was the price received per unit of measure sold the week of January 13 through January 17, 2020, (or if not available, the nearest to this date) and what is the basis for the determination of this price?

(3) What was the price received per unit of measure sold the week of April 6 through April 10, 2020, (or if not available, the nearest date to this) and what is the basis for the determination of this price?

USDA is particularly interested in the obtaining information with respect to the following specific categories of agricultural commodities.

Nursery Products

If you are providing information for a nursery that produces multiple products, such as trees, shrubs, or perennial plants, please specify your responses to the questions below separately by product:

(1) For live trees, shrubs, or other plants that you produced, had vested ownership in, and had in inventory at some point between January 15, 2020, and April 15, 2020, what was:

(a) The average price you received per plant specified by type of nursery product sold (for example, roses, boxwoods, junipers) you sold the week of January 13 through January 17, 2020, (or if not available, nearest date to this);

(b) The average price you received per plant you sold the week of April 6 through April 10, 2020, (or if not available, nearest date to this);

(c) The number of plants you sold between January 15, 2020, and April 15, 2020.

(2) The number and the contracted price of plants you produced that left your nursery by April 15, 2020, and subsequently died or withered due to no market, and for which you did not have

Federal crop insurance or obtain Noninsured Crop Disaster Assistance Program (NAP) to cover the loss.

(3) The inventory of plants ready for sale that did not leave the nursery by April 15, 2020, and that will not be sold due to lack of markets.

Aquaculture Products

The CFAP regulation provided that certain aquaculture producers would be eligible for participation in CFAP. The determination of eligible producers was made based upon consultation with the Department of Commerce, as that agency is also establishing a program to assist certain aquaculture producers. For CFAP, an eligible aquaculture producer is one who has a privately-owned aquaculture business that propagates freshwater and saltwater products in controlled environments (including raceways, ponds, tanks, and recirculating systems). Farmed shrimp and salmonids (trout and salmon) will be included in CFAP to the extent USDA determines individual types of these products have incurred a requisite decline in price.

Accordingly, through this document, USDA requests information from aquaculture producers to make the determination of a price decline. If the farm produces multiple aquaculture products, please specify your responses to the questions below separately by product.

(1) For live aquaculture that you produced, had vested ownership in, and had in inventory at some point between January 15, 2020, and April 15, 2020, what was:

(a) The average price you received per product the week of January 13 through January 17, 2020, (or if not available, nearest date to this);

(b) The average price you received per aquaculture product you sold the week of April 6 through April 10, 2020, (or if not available, nearest date to this);

(c) The number of aquaculture products you sold between January 15, 2020, and April 15, 2020.

(2) The number and the contracted price of aquaculture products you produced that left your farm by April 15, 2020, and subsequently spoiled due to no market, and for which you did not have Federal crop insurance or obtained NAP to cover the loss.

(3) The inventory of aquaculture products as April 15, 2020, that will not be sold due to lack of markets.

Paperwork Reduction Act Requirements

In accordance with the Paperwork Reduction Act of 1995 (44 U.S.C. Chapter 35), FSA is requesting comments from interested individuals and organizations on the information collection activities related to CFAP. FSA received emergency approval from OMB for 6 months, and FSA will request 3-years approval for CFAP information collection activities.

Title: Coronavirus Food Assistance Program (CFAP).

OMB Control Number: 0560–0295.

Type of Request: New Collection.

Abstract: This information collection is required to support all CFAP information collection activities (applicable NOFAs and the regulation in 7 CFR part 9) to provide payments to eligible producers who, with respect to their agricultural commodities, have been impacted by the effects of the COVID–19 outbreak. The information collection is necessary to evaluate the application and other required paperwork for determining the producer's eligibility and assist in the producer's payment calculations. FSA will start accepting CFAP applications later this month. If a producer who applies must submit additional documentation for eligibility, such as certifications of compliance with adjusted gross income provisions and conservation compliance activities, those additional documents and forms must be submitted no later than 60 days from the date the producer signs the application.

For the following estimated total annual burden on respondents, the formula used to calculate the total burden hour is the estimated average time per response multiplied by the estimated total annual responses.

Type of Respondents: Producers or farmers.

Estimated Annual Number of Respondents: 1,630,000.

Estimated Number of Responses per Respondent: 2.6822.

Estimated Total Annual Responses: 4,372,000.

Estimated Average Time per Response: 0.79309 hours.

Estimated Total Annual Burden on Respondents: 3,467,400 hours.

FSA is requesting comments on all aspects of this information collection to help us to:

(1) Evaluate whether the collection of information is necessary for the proper performance of the functions of FSA, including whether the information will have practical utility;

(2) Evaluate the accuracy of FSA's estimate of burden, including the validity of the methodology and assumptions used;

(3) Enhance the quality, utility and clarity of the information to be collected; and

(4) Minimize the burden of the collection of information on respondents, including through the use of appropriate automated, electronic, mechanical, or other technological collection techniques or other forms of information technology.

All comments received in response to this document, including names and addresses when provided, will be a matter of public record. Comments will be summarized and included in the submission for Office of Management and Budget approval.

Environmental Review

The environmental impacts of CFAP have been considered in a manner consistent with the provisions of the National Environmental Policy Act (NEPA), the regulations of the Council on Environmental Quality (40 CFR parts 1500–1508), and, because USDA will be making the payments to producers, the USDA regulations for compliance with NEPA (7 CFR part 1b).

Although OMB has designated the CFAP rule as ''economically significant'' under Executive Order 12866, ''. . . economic or social effects are not intended by themselves to require preparation of an environmental impact statement'' when not interrelated to natural or physical environmental effects (see 40 CFR 1508.14). CFAP was designed to avoid skewing planting decisions. Producers continue to make their planting and production decisions with market signals in mind, rather than any expectation of what a new USDA program might look like. The discretionary aspects of CFAP (for example, determining Adjusted Gross Income and payment limitations) were designed to be consistent with established USDA and CCC programs and are not expected to have any impact on the human environment, as CFAP payments will only be made after the commodity has been produced. Accordingly, the following Categorical Exclusion in 7 CFR part 1b applies: 1b.3(2), which applies to activities that deal solely with the funding of programs, such as program budget proposals, disbursements, and the transfer or reprogramming of funds. As such, the implementation of and participation in CFAP do not constitute major Federal actions that would significantly affect the quality of the human environment, individually or cumulatively. Therefore, an environmental assessment or environmental impact statement for CFAP will not be prepared; this document serves as documentation of the programmatic environmental

compliance decision for this federal action.

Federal Assistance Programs

The title and number of the Federal assistance programs, as found in the Catalog of Federal Domestic Assistance, to which this NOFA applies is CFAP and 10.130.

Stephen L. Censky,

Vice Chairman, Commodity Credit Corporation, and Deputy Secretary, U.S. Department of Agriculture.

[FR Doc. 2020–11155 Filed 5–20–20; 4:15 pm]

BILLING CODE 3410–05–P

DEPARTMENT OF ENERGY

10 CFR Parts 430 and 431

[EERE–2016–BT–TP–0011]

RIN 1904–AD95

Energy Conservation Program: Test Procedures for Residential and Commercial Clothes Washers

AGENCY: Office of Energy Efficiency and Renewable Energy, Department of Energy.

ACTION: Request for information.

SUMMARY: The U.S. Department of Energy (''DOE'') is initiating a data collection process through this request for information (''RFI'') to consider whether to amend its test procedures for clothes washers. As part of this RFI, DOE seeks comment on whether there have been changes in product testing methodology or new products on the market since the last test procedure update that may create the need to make amendments to the test procedure for clothes washers. DOE also seeks data and information that could enable the agency to propose that the current test procedure produces results that are representative of an average use cycle for the product and is not unduly burdensome to conduct, and therefore does not need amendment. DOE requests comment on specific aspects of the current test procedure, including product definitions and configurations, testing conditions and instrumentation, measurement methods, representative usage and efficiency factors, and metric definitions. DOE also seeks comment on any additional topics that may inform DOE's decision whether to conduct a future test procedure rulemaking, including methods to ensure that the test procedure is reasonably designed to measure energy and water use during a representative average use cycle or period of use and is not unduly burdensome to conduct. DOE welcomes written comments from the public on any subject within the scope of this document (including topics not raised in this RFI).

DATES: Written comments and information are requested and will be accepted on or before June 22, 2020.

ADDRESSES: Interested persons are encouraged to submit comments using the Federal eRulemaking Portal at *http://www.regulations.gov.* Follow the instructions for submitting comments. Alternatively, interested persons may submit comments, identified by docket number EERE–2016–BT–TP–0011, by any of the following methods:

1. *Federal eRulemaking Portal: http://www.regulations.gov.* Follow the instructions for submitting comments.

2. *Email: ResClothesWasher2016TP0011@ee.doe.gov.* Include docket number EERE–2016–BT–TP–0011 in the subject line of the message.

3. *Postal Mail:* Appliance and Equipment Standards Program, U.S. Department of Energy, Building Technologies Office, Mailstop EE–5B, 1000 Independence Avenue SW, Washington, DC 20585–0121. Telephone: (202) 287–1445. If possible, please submit all items on a compact disc (''CD''), in which case it is not necessary to include printed copies.

4. *Hand Delivery/Courier:* Appliance and Equipment Standards Program, U.S. Department of Energy, Building Technologies Office, 950 L'Enfant Plaza SW, Suite 600, Washington, DC 20024. Telephone: (202) 287–1445. If possible, please submit all items on a CD, in which case it is not necessary to include printed copies.

No telefacsimilies (faxes) will be accepted. For detailed instructions on submitting comments and additional information on this process, see section IV of this document.

Docket: The docket for this activity, which includes **Federal Register** notices, comments, and other supporting documents/materials, is available for review at *http://www.regulations.gov.* All documents in the docket are listed in the *http://www.regulations.gov* index. However, some documents listed in the index, such as those containing information that is exempt from public disclosure, may not be publicly available.

The docket web page can be found at: *http://www.regulations.gov/#!docketDetail;D=EERE-2016-BT-TP-0011.* The docket web page contains simple instructions on how to access all documents, including public comments, in the docket. See section IV for information on how to submit comments through *http://www.regulations.gov.*

FOR FURTHER INFORMATION CONTACT: Mr. Bryan Berringer, U.S. Department of Energy, Office of Energy Efficiency and Renewable Energy, Building Technologies Office, EE–5B, 1000 Independence Avenue SW, Washington, DC 20585–0121. Telephone: (202) 586–0371. Email: *ApplianceStandardsQuestions@ee.doe.gov.*

Ms. Elizabeth Kohl, U.S. Department of Energy, Office of the General Counsel, GC–33, 1000 Independence Avenue SW, Washington, DC 20585–0121. Telephone: (202) 586–7796. Email: *Elizabeth.Kohl@hq.doe.gov.*

For further information on how to submit a comment or review other public comments and the docket, contact the Appliance and Equipment Standards Program staff at (202) 287–1445 or by email: *ApplianceStandardsQuestions@ee.doe.gov.*

SUPPLEMENTARY INFORMATION:

Table of Contents

I. Introduction
A. Authority
B. Rulemaking History
II. Request for Information and Comments
A. Scope & Definitions
B. Test Procedure
1. Connected Clothes Washers
2. Testing Conditions, Instrumentation, and Installation
3. Test Cloth
4. Capacity Measurement Alternatives
5. Cycle Selection and Settings
6. Wash/Rinse Temperature Selections for Semi-Automatic Clothes Washers
7. Usage Factors
8. Associated Equipment Efficiencies
9. Non-Conventional Features
C. Metrics
1. Energy Efficiency Metric
2. Water Efficiency Metric
3. Annual Energy Calculation
III. Other Comments, Data, and Information
IV. Submission of Comments

I. Introduction

Residential clothes washers (''RCWs'') are included in the list of ''covered products'' for which DOE is authorized to establish and amend energy conservation standards and test procedures. (42 U.S.C. 6292(a)(7)) DOE's test procedures for RCWs are prescribed at 10 CFR 430.23(j) and appendices J1, J2, and J3 to subpart B of 10 CFR part 430. Commercial clothes washers (''CCWs'') are included in the list of ''covered equipment'' for which DOE is authorized to establish and amend energy conservation standards and test procedures. (42 U.S.C. 6311(1)(H)) The test procedures for CCWs must be the

same as those for established for RCWs. (42 U.S.C. 6314(a)(8)) The following sections discuss DOE's authority to establish and amend test procedures for RCWs and CCWs, as well as relevant background information regarding DOE's consideration of test procedures for these products.

A. Authority

The Energy Policy and Conservation Act of 1975, as amended (''EPCA'') [1] authorizes DOE to regulate the energy efficiency of a number of consumer products and certain industrial equipment, among other things. (42 U.S.C. 6291–6317) Title III, Part B [2] of EPCA established the Energy Conservation Program for Consumer Products Other Than Automobiles, which sets forth a variety of provisions designed to improve energy efficiency. These consumer products include RCWs. (42 U.S.C. 6292(a)(7)) Title III, Part C [3] of EPCA, added by Public Law 95–619, Title IV, section 441(a), established the Energy Conservation Program for Certain Industrial Equipment. This equipment includes CCWs. (42 U.S.C. 6311(1)(H)) Both RCWs and CCWs are the subject of this RFI.

The energy conservation program under EPCA consists essentially of four parts: (1) Testing, (2) labeling, (3) Federal energy conservation standards, and (4) certification and enforcement procedures. Relevant provisions of the Act specifically include definitions (42 U.S.C. 6291; 42 U.S.C. 6311), energy conservation standards (42 U.S.C. 6295; 42 U.S.C. 6313), test procedures (42 U.S.C. 6293; 42 U.S.C. 6314), labeling provisions (42 U.S.C. 6294; 42 U.S.C. 6315), and the authority to require information and reports from manufacturers (42 U.S.C. 6296; 42 U.S.C. 6316).

Federal energy efficiency requirements for covered products and covered equipment established under EPCA generally supersede State laws and regulations concerning energy conservation testing, labeling, and standards. (42 U.S.C. 6297; 42 U.S.C. 6316(a) and (b)) DOE may, however, grant waivers of Federal preemption for particular State laws or regulations, in accordance with the procedures and other provisions of EPCA. (42 U.S.C. 6297(d); 42 U.S.C. 6316(b)(2)(D))

The Federal testing requirements consist of test procedures that manufacturers of covered products and covered equipment must use as the basis for: (1) Certifying to DOE that their products or equipment comply with the applicable energy conservation standards adopted pursuant to EPCA (42 U.S.C. 6295(s); 42 U.S.C. 6316(a)), and (2) making representations about the efficiency of those covered products or equipment (42 U.S.C. 6293(c); 42 U.S.C. 6314(d)). Similarly, DOE must use these test procedures to determine whether the products or equipment comply with relevant standards promulgated under EPCA. (42 U.S.C. 6295(s); 42 U.S.C. 6316(a))

Under 42 U.S.C. 6293, EPCA sets forth the criteria and procedures DOE must follow when prescribing or amending test procedures for covered products. EPCA requires that any test procedures prescribed or amended under this section be reasonably designed to produce test results which measure energy efficiency, energy use or estimated annual operating cost of a covered product during a representative average use cycle or period of use and not be unduly burdensome to conduct. (42 U.S.C. 6293(b)(3))

If DOE determines that a test procedure amendment is warranted, it must publish proposed test procedures and offer the public an opportunity to present oral and written comments on them. (42 U.S.C. 6293(b)(2))

In addition, EPCA requires that DOE amend its test procedures for all covered products, including RCWs, to integrate measures of standby mode and off mode energy consumption into the overall energy efficiency, energy consumption, or other energy descriptor, taking into consideration the most current versions of Standards 62301 and 62087 of the International Electrotechnical Commission (''IEC''), unless the current test procedure already incorporates the standby mode and off mode energy consumption, or if such integration is technically infeasible. (42 U.S.C. 6295(gg)(2)(A)) [4] [5] If an integrated test procedure is technically infeasible, DOE must prescribe separate standby mode and off mode energy use test procedures for the covered product, if a separate test is technically feasible. (*Id.*) As described in the following sections, DOE's current clothes washer test procedure includes provisions for measuring energy consumption in standby mode and off mode.

EPCA also requires that, at least once every 7 years, DOE evaluate test procedures for each type of covered product, including clothes washers, to determine whether amended test procedures would more accurately or fully comply with the requirements for the test procedures to not be unduly burdensome to conduct and be reasonably designed to produce test results that reflect energy efficiency, energy use, and estimated operating costs during a representative average use cycle or period of use. (42 U.S.C. 6293(b)(1)(A)) If the Secretary determines, on his own behalf or in response to a petition by any interested person, that a test procedure should be prescribed or amended, the Secretary shall promptly publish in the **Federal Register** proposed test procedures and afford interested persons an opportunity to present oral and written data, views, and arguments with respect to such procedures. The comment period on a proposed rule to amend a test procedure shall be at least 60 days and may not exceed 270 days. In prescribing or amending a test procedure, the Secretary shall take into account such information as the Secretary determines relevant to such procedure, including technological developments relating to energy use or energy efficiency of the type (or class) of covered products involved. (42 U.S.C. 6293(b)(2)) If DOE determines that test procedure revisions are not appropriate, DOE must publish its determination not to amend the test procedures. DOE is publishing this RFI to collect data and information to inform its decision pursuant to the 7-year review requirement specified in EPCA. (42 U.S.C. 6293(b)(1)(A))

Additionally, EPCA requires the test procedures for CCWs to be the same as the test procedures established for RCWs. (42 U.S.C. 6314(a)(8)) As with the test procedures for RCWs, EPCA requires that DOE evaluate, at least once every 7 years, the test procedures for CCWs to determine whether amended test procedures would more accurately or fully comply with the requirements for the test procedures to not be unduly burdensome to conduct and be reasonably designed to produce test results that reflect energy efficiency, energy use, and estimated operating costs during a representative average use cycle. (42 U.S.C. 6314(a)(1)) This document also seeks input from the public to assist in a determination as to whether amendments to test procedures are necessary in the context of CCWs.

[1] All references to EPCA in this document refer to the statute as amended through America's Water Infrastructure Act of 2018, Public Law 115–270 (October 23, 2018).

[2] For editorial reasons, upon codification in the U.S. Code, Part B was redesignated Part A.

[3] For editorial reasons, upon codification in the U.S. Code, Part C was redesignated Part A–1.

[4] IEC Standard 62087 addresses the methods of measuring the power consumption of audio, video, and related equipment and is not relevant to clothes washers.

[5] EPCA does not contain an analogous provision for commercial equipment.

B. Rulemaking History

DOE originally established its clothes washer test procedure, codified at 10 CFR part 430, subpart B, appendix J (''Appendix J''), in a September 1977 final rule. 42 FR 49802 (Sept. 28, 1977). Since that time, the test procedure has undergone a number of amendments. In August 1997, DOE published a final rule (''August 1997 Final Rule'') amending Appendix J to include a measurement of remaining moisture content (''RMC'') to account for more efficient water extraction and to reflect changes in clothes washer features and consumer usage patterns, among other changes. 62 FR 45484 (Aug. 27, 1997). The August 1997 Final Rule also established an appendix J1 at 10 CFR part 430, subpart B (''Appendix J1''), which included a new definition of the energy test cycle, new energy test cloth pre-conditioning requirements, the use of a third load size (average load) for adaptive water fill control systems, a load size table for all clothes washers (including clothes washers with manual water fill control systems), and a simplified Temperature Use Factor (''TUF'')[6] table, among other minor technical changes. *Id.*

In the January 2001 Final Rule, DOE provided further minor technical amendments to Appendix J and Appendix J1, as well as a sunset provision specifying that the provisions of Appendix J would expire on December 31, 2003. 66 FR 3313. Additional amendments to Appendix J1 included, among other things, a methodology for developing correction factors for each new lot of test cloth to reduce variability in the RMC measurement due to differences in test cloth lots. *Id.*

In March 2012, DOE published a final rule (''March 2012 Final Rule'') amending Appendix J1 to expand the load size table to accommodate clothes washers with capacities up to 6 cubic feet (''cu.ft.'') as well as some other minor changes. 77 FR 13887 (March 7, 2012). The March 2012 Final Rule also established a new test procedure at 10 CFR part 430, subpart B, appendix J2 (''Appendix J2''), which incorporated the following amendments: (1) Provisions for measuring energy consumption in standby mode and off mode; (2) a more comprehensive efficiency metric for water consumption; (3) a more accurate reflection of consumer usage patterns; (4) revisions to the energy test cycle definition; (5) revisions to the capacity measurement method; (6) revisions related to the test cloth, including the preconditioning detergent and test equipment; (7) clarification of certain testing conditions and certain provisions of the test procedure; and (8) revisions to the calculation for annual operating cost. 77 FR 13887, 13891. The March 2012 Final Rule also removed the obsolete Appendix J. 77 FR 13887, 13892.

On August 5, 2015, DOE published a final rule (''August 2015 Final Rule'') that provided clarifying edits to Appendix J1 and Appendix J2. 80 FR 46729. The August 2015 Final Rule also moved the test cloth qualification procedures from Appendix J1 and Appendix J2 to a new test procedure at 10 CFR part 430, subpart B, appendix J3 (''Appendix J3''). The test cloth qualification procedure specifies a standard extractor RMC test to evaluate the moisture absorption and retention characteristics, and to develop a unique correction curve for each new lot of test cloth, which helps ensure that a consistent RMC measurement is obtained for any test cloth lot used during testing. This procedure is performed for each new lot of test cloth before the cloths can be used in the test procedure provisions that measure clothes washer performance; it is not performed as part of the testing required for any particular unit under test. Therefore, DOE moved the test cloth qualification procedure to the new Appendix J3 as a standalone test method to improve the clarity and overall logical flow of the Appendix J1 and Appendix J2 test procedures. *Id.* The correction factors developed for each new cloth lot are used to adjust the RMC measurements obtained when performing an Appendix J1 or Appendix J2 test on an individual clothes washer unit.

The current version of the test procedure at Appendix J2 includes provisions for determining modified energy factor (''MEF'') and integrated modified energy factor (''IMEF'') in cubic feet per kilowatt-hour per cycle (''cu.ft./kWh/cycle''); and water factor (''WF'') and integrated water factor (''IWF'') in gallons per cycle per cubic feet (''gal/cycle/cu.ft.''). RCWs manufactured on or after January 1, 2018 must meet current energy conservation standards, which are based on IMEF and IWF, as determined using Appendix J2. 10 CFR 430.23(j)(2)(ii) and (4)(ii); 430.32(g)(4) CCWs manufactured on or after January 1, 2018 must meet energy conservation standards for this equipment based on MEF[7] and IWF, which are also determined using Appendix J2. 10 CFR 431.154 and 10 CFR 431.156(b)

II. Request for Information and Comments

As an initial matter, DOE seeks comment on whether there have been changes in product testing methodology or new products on the market since the last test procedure update. DOE also seeks data and information that could enable the agency to propose that the current test procedure produces results that are representative of an average use cycle for the product and is not unduly burdensome to conduct, and therefore does not need amendment. DOE also seeks information on whether an existing private-sector developed test procedure would produce such results and should be adopted by DOE rather than DOE establishing its own test procedure, either entirely or by adopting only certain provisions of one or more private-sector developed tests.

In the following sections, DOE has also identified a variety of issues on which it seeks input to determine whether amended test procedures for clothes washers would more accurately or fully comply with the requirements in EPCA that test procedures: (1) Be reasonably designed to produce test results which reflect energy use during a representative average use cycle, and (2) not be unduly burdensome to conduct. (42 U.S.C. 6293(b)(3), 6314(a)(2))

Additionally, DOE welcomes comments on other issues relevant to the conduct of this process that may not be specifically identified in this document. In particular, DOE notes that under Executive Order 13771, ''Reducing Regulation and Controlling Regulatory Costs,'' Executive Branch agencies such as DOE are directed to manage the costs associated with the imposition of expenditures required to comply with Federal regulations. 82 FR 9339 (Feb. 3, 2017). Consistent with that Executive Order, DOE also encourages the public to provide input on measures DOE could take to lower the cost of its regulations applicable to RCWs and CCWs, consistent with the requirements of EPCA.

[6] As described in more detail later in this document, TUFs are weighting factors that represent the percentage of wash cycles for which consumers choose a particular wash/rinse temperature selection.

[7] For CCWs, the energy conservation standards at 10 CFR 431.156 refer to MEF as ''MEF_{J2}'' to distinguish MEF as calculated using Appendix J2 from MEF as calculated from Appendix J1, which was the basis for energy conservation standards prior to January 1, 2018. Due to several differences (*e.g.,* the capacity measurement and the drying energy calculation), the MEF metrics in Appendices J1 and J2 are not equivalent.

A. Scope & Definitions

DOE defines ''clothes washer'' as a consumer product designed to clean clothes, utilizing a water solution of soap and/or detergent and mechanical agitation or other movement, and must be one of the following classes: Automatic clothes washers, semi-automatic clothes washers, and other clothes washers. 10 CFR 430.2

An ''automatic clothes washer'' is a class of clothes washer that has a control system that is capable of scheduling a preselected combination of operations, such as regulation of water temperature, regulation of the water fill level, and performance of wash, rinse, drain, and spin functions without the need for user intervention subsequent to the initiation of machine operation. Some models may require user intervention to initiate these different segments of the cycle after the machine has begun operation, but they do not require the user to intervene to regulate the water temperature by adjusting the external water faucet valves. Id.

A ''semi-automatic clothes washer'' is a class of clothes washer that is the same as an automatic clothes washer except that user intervention is required to regulate the water temperature by adjusting the external water faucet valves. Id.

''Other clothes washer'' means a class of clothes washer that is not an automatic or semi-automatic clothes washer. Id.

''Commercial clothes washer'' is defined as a soft-mount front-loading or soft-mount top-loading clothes washer that—

(A) has a clothes container compartment that—

(i) for horizontal-axis clothes washers, is not more than 3.5 cubic feet; and

(ii) for vertical-axis clothes washers, is not more than 4.0 cubic feet; and

(B) is designed for use in—

(i) applications in which the occupants of more than one household will be using the clothes washer, such as multi-family housing common areas and coin laundries; or

(ii) other commercial applications.

(42 U.S.C. 6311(21); 10 CFR 431.452).

B. Test Procedure

1. Connected Clothes Washers

DOE is currently aware of several ''connected'' RCW models on the market, from at least four major manufacturers. These products offer optional wireless network connectivity to enable features such as remote monitoring and control via smartphone, as well as limited demand response features [8] available through partnerships with a small number of local electric utilities. In addition, connected features are available via certain external communication modules for CCWs. However, DOE is not aware of any CCW models currently on the market that incorporate connected features directly into the unit.

DOE recently published an RFI on the emerging smart technology appliance and equipment market. 83 FR 46886 (Sept. 17, 2018). In that RFI, DOE sought information to better understand market trends and issues in the emerging market for appliances and commercial equipment that incorporate smart technology. DOE's intent in issuing the RFI was to ensure that DOE did not inadvertently impede such innovation in fulfilling its statutory obligations in setting efficiency standards for covered products and equipment.

Issue II.B.1. DOE seeks comments, data and information on the issues presented in the ''smart products'' RFI as they may be applicable to RCWs and CCWs.

Issue II.B.2. DOE requests feedback on its characterization of connected RCWs, and any CCWs, currently on the market. Specifically, DOE requests input on the types of features or functionality enabled by connected clothes washers that exist on the market or that are under development.

Section 3.2.7 of Appendix J2 specifies using the manufacturer default settings for any cycle selections except temperature selection, wash water fill level, or spin speed; and section 3.9.1 of Appendix J2 specifies performing the combined low-power mode testing without changing any control panel settings used for the active mode wash cycle. With regard to the measurement of network mode energy use, however, DOE stated in its 2012 rule (a conclusion not affected by the 2015 amendments), that ''DOE cannot thoroughly evaluate these [IEC Standard 62301 (Second Edition)] network mode provisions, as would be required to justify their incorporation into DOE's test procedures at this time. DOE notes that although an individual appliance may consume some small amount of power in network mode, the potential exists for energy-related benefits that more than offset this additional power consumption if the appliance can be controlled by the ''smart grid'' to consume power during non-peak periods. Although DOE is supportive of efforts to develop smart-grid and other network-enabled technologies in clothes washers, this final rule does not incorporate the network mode provisions due to the lack of available data that would be required to justify their inclusion.'' 77 FR 13888, 13900 (Mar. 7, 2012). Consistent with the goals of the ''smart products'' RFI, DOE will ensure that it does not impede innovation in the development of smart or connected products in considering any amendments to the test procedure for clothes washers with regard to measuring the energy use of connected features.

Issue II.B.3. DOE requests comment on whether changes to the current clothes washer test procedure would advance the goal of the ''smart products'' RFI. In particular, DOE seeks comment on adding a clarifying provision that would require testing to be conducted with any network functionality turned off, or without measuring or reporting the energy use of the clothes washer in network mode.

Issue II.B.4. DOE requests data on the percentage of users purchasing connected RCWs who activate the connected capabilities, and, for those users, the percentage of the time when the connected functionality of the RCW is activated and using additional energy.

DOE seeks to understand the potential effects of connected functionality as it relates to a clothes washer's energy use or energy efficiency, including the following:

- Hardware or software-related energy use implications of such features; for example, whether including communication chips on a circuit board could affect a product's energy consumption in standby mode.
- Consumer behavioral energy use implications of such features; for example, allowing the consumer to remotely activate a ''wrinkle prevention'' feature that periodically tumbles the drum after completion of a wash cycle would increase that cycle's energy use.
- Utility grid-level benefits enabled by such features; for example, using demand response capabilities to shift power loads from peak periods to off-peak periods and possibly automating cycle starts to coincide with periods of off-peak pricing.

Issue II.B.5. DOE requests data on the amount of additional or reduced energy use by connected clothes washers. DOE also requests data on the pattern of additional or reduced energy use; for example, whether it is constant, periodic, or triggered by the user.

[8] ''Demand response features'' refers to product functionality that can be controlled by the ''smart grid'' to improve the overall operation of the electrical grid, for example by reducing energy consumption during peak periods and/or shifting power consumption to off-peak periods.

Issue II.B.6. DOE requests information about which existing modes (*e.g.,* active, standby, off) are affected by connected functionality.

Issue II.B.7. DOE requests information on any existing testing protocols that account for connected features of clothes washers.

2. Testing Conditions, Instrumentation, and Installation

a. Hot Water Supply Temperature

Section 2.2 of Appendix J2 requires maintaining the hot water supply temperature between 130 degrees Fahrenheit (''°F'') (54.4 degrees Celsius (''°C'')) and 135 °F (57.2 °C), using 135 °F as the target temperature.

DOE has revised the hot water supply temperature requirements several times throughout the history of the clothes washer test procedure to remain representative of household water temperatures at the time of its analysis. When establishing the original clothes washer test procedure at Appendix J in 1977, DOE specified a hot water supply temperature of 140 °F ± 5 °F. In the August 1997 Final Rule, DOE specified in Appendix J1 that for clothes washers in which electrical energy consumption or water energy consumption is affected by the inlet water temperature,[9] the hot water supply temperature cannot exceed 135 °F (57.2 °C); and for other clothes washers, the hot water supply temperature is to be maintained at 135 °F ± 5 °F (57.2 °C ± 2.8 °C). 62 FR 45484, 45497. DOE maintained these same requirements in the original version of Appendix J2. In the August 2015 Final Rule, DOE adjusted the allowable tolerance of the hot water supply temperature in section 2.2 of Appendix J2 to between 130 °F (54.4 °C) and 135 °F (57.2 °C) for all clothes washers, but maintained 135 °F as the target temperature. 80 FR 46729, 46734.

DOE most recently analyzed household water temperatures as part of the consumer water heater test procedure rulemaking. In the July 11, 2014, consumer water heater test procedure final rule, DOE revised the hot water delivery temperature from 135 °F to 125 °F. 79 FR 40541, 40554. This change was primarily based on data available in DOE's analysis for the April 16, 2010, consumer water heater energy conservation standards final rule, which found that the average set point temperature for consumer water heaters in the field is 124.2 °F (51.2 °C). 75 FR 20111. Additionally, a 2011 compilation of field data across the United States and southern Ontario by Lawrence Berkeley National Laboratory (''LBNL'')[10] found a median daily outlet water temperature of 122.7 °F (50.4 °C). 79 FR 40541, 40554. Further, DOE noted in the consumer water heater energy conservation standards final rule that water heaters are commonly set with temperatures in the range of 120 °F to 125 °F. *Id.*

Additionally, DOE's consumer dishwasher test procedure, codified at 10 CFR part 430 subpart B, appendix C1, specifies a hot water supply temperature of 120 °F ± 2 °F for water-heating dishwashers designed for heating water with a nominal inlet temperature of 120 °F, which includes nearly all consumer dishwashers currently on the U.S. market.

Issue II.B.8. DOE requests comments on whether DOE should consider updating the hot water supply temperature for the clothes washer test procedure. DOE also requests information on the use of the current hot water supply temperature for clothes washers in relation to the consumer water heater and dishwasher test procedures. Specifically, DOE is interested in data and information on the hot water temperature used in practice, any potential impact to testing costs that may occur by harmonizing temperatures between the clothes washer and dishwasher test procedures, and the impacts on manufacturer burden associated with any changes to the hot water supply temperature.

Based on experience working with third-party test laboratories, as well as its own testing experience, DOE recognizes that maintaining 135 °F as the target temperature for the hot water supply may be difficult given that the target temperature of 135 °F lies at the edge, rather than the midpoint, of the allowable temperature range of 130 °F to 135 °F. On electronic temperature mixing valves typically used by test laboratories, the output water temperature is maintained within an approximately two-degree tolerance above or below a target temperature programmed by the user (*e.g.,* if the target temperature is set at 135 °F, the controller may provide water temperatures ranging from 133 °F to 137 °F). To ensure that the hot water inlet temperature remains within the allowable range of 130 °F to 135 °F, such a temperature controller would need to be programmed to 132.5 °F, the midpoint of the range, which conflicts with the test procedure requirement to use 135 °F as the target temperature. An analogous difficulty exists for the cold water inlet temperature. Section 2.2 of appendix J2 specifies maintaining a cold water temperature between 55 °F and 60 °F, using 60 °F as the target.

Issue II.B.9. DOE requests comments on whether it should consider any changes to the target temperature or allowable range of temperatures specified for the hot and cold water inlets, and if so what alternate specifications should be considered.

Changing the hot water supply temperature could change the relative hot and cold water usage of clothes washers with thermostatically controlled mixing valves, which includes nearly all clothes washers in the current market. If DOE were to update the supply water temperature, DOE would also investigate what impact, if any, such a change would have on a clothes washer's measured IMEF value. DOE seeks comment on such impact in response to this RFI.

Issue II.B.10. DOE requests comments on how any changes to the hot water supply temperature would impact a clothes washer's measured IMEF value.

b. Measuring Wash Water Temperature

In the August 2015 Final Rule, DOE amended section 3.3 of Appendix J2, ''Extra-Hot Wash/Cold Rinse,'' to allow the use of non-reversible temperature indicator labels to confirm that a wash temperature greater than 135 °F has been achieved. 80 FR 46729, 46753. Since the publication of the August 2015 Final Rule, DOE has become aware that some third-party laboratories measure wash temperature using self-contained temperature sensors in a waterproof casing placed inside the clothes washer drum.

Issue II.B.11. DOE requests comments on manufacturers' or test laboratories' experience with these or any other methods for determining the temperature during a wash cycle that may reduce manufacturer burden, including any information regarding the reliability and accuracy of those methods.

c. Water Meter Resolution

Appendix J2 requires the use of water meters to measure water flow and/or water consumption. Section 2.5.5 of Appendix J2 requires a resolution no larger than 0.1 gallons for the water meters, and a maximum error no greater than 2 percent of the measured flow rate. DOE has observed that some clothes washers use very small amounts of hot water on some temperature selections, on the order of 0.1 gallons or

[9] For example, water-heating clothes washers or clothes washers with thermostatically controlled water valves.

[10] Lutz, JD, Renaldi, Lekov A, Qin Y, and Melody M., ''Hot Water Draw Patterns in Single Family Houses: Findings from Field Studies,'' LBNL Report number LBNL–4830E (May 2011). Available at *http://www.escholarship.org/uc/item/2k24v1kj.*

less. For example, some clothes washers have both Cold and Tap Cold temperature selections, and the Cold selection may use a fraction of a gallon of hot water. DOE believes that Appendix J2 may not provide the necessary resolution to accurately and precisely measure the hot water usage of such temperature selections.

Issue II.B.12. DOE requests comments on the benefits and test burden of requiring a water meter with a resolution more precise than 0.1 gallons. Additionally, DOE requests comments on manufacturers' and testing laboratories' experiences in testing with a water meter with a resolution more precise than 0.1 gallons, including information on related testing burden and benefits.

d. Installation of Single-Inlet Clothes Washers

Section 2.10 of Appendix J2 provides specifications for installing a clothes washer, referencing both the hot water and cold water inlets. Additionally, section 2.5.5 of Appendix J2 specifies that a water meter must be installed in both the hot and cold water lines.

DOE is aware of RCWs on the market that have a single water inlet rather than separate hot and cold water inlets. DOE has observed two types of single-inlet RCWs: (1) Automatic clothes washers intended to be connected only to a cold water inlet, and which regulate the water temperature through the use of internal heating elements to generate any hot water used during the cycle; and (2) semi-automatic clothes washers that are intended to be connected to a kitchen or bathroom faucet, and which require user intervention to regulate the water temperature by adjusting the external water faucet valves.

Issue II.B.13. DOE requests input on whether any other types of single-inlet clothes washers exist on the market today or are under development.

For a single-inlet automatic clothes washer (*i.e.,* the first example described above), DOE understands that a ''Y''-shaped hose connector or other similar device may be provided by the manufacturer on some models to allow both water supply lines to be connected to the single inlet on the unit; however, other models may not include such a connector. DOE is considering whether testing single-inlet automatic clothes washers installed to only the cold water supply line during the test would be representative of the energy used during a representative average use cycle or period of use.

Issue II.B.14. DOE requests comments or information on how single-inlet automatic clothes washers are typically installed by customers. Specifically, DOE requests information on the percentage of single-inlet automatic clothes washers sold with a Y-shaped hose connector or similar such device; the extent that consumers use any provided device; and in instances in which no device is provided, whether it is typical for customers to connect the water inlet to a cold or hot water supply line.

For single-inlet semi-automatic clothes washers (*i.e.,* the second example described above), DOE has observed that these clothes washers are most often designed to be connected to a kitchen or bathroom faucet, with a single hose connecting the faucet to the single inlet on the clothes washer (*i.e.,* both cold and hot water are supplied to the clothes washer through a single hose). The user regulates the water temperature externally by adjusting the faucet to provide cold, warm, or hot water temperatures for the wash and rinse portions of the cycle. Appendix J2 specifies the use of two separate water supply connections, one for cold water and one for hot water. Connecting a single-inlet semi-automatic clothes washer to only a single water supply would limit the available water temperature to either 60 °F (provided by the cold water supply) or 135 °F (provided by the hot water supply). In effect, only Cold Wash/Cold Rinse or Hot Wash/Hot Rinse could be tested with a single-hose installation. Appendix J2 does not provide explicit direction on how to connect a single-inlet semi-automatic clothes washer to allow testing at other wash/rinse temperatures. DOE seeks data on whether, and if so how, consumers using this type of clothes washer adjust the water temperature for the wash and rinse portions the cycle. Section II.B.6 of this document provides further details on wash/rinse temperature selections for semi-automatic clothes washers. DOE also seeks comment on how such clothes washers are currently tested.

Issue II.B.15. DOE requests comments, data, and information on the typical connection and representative average use of single-inlet semi-automatic clothes washers. Additionally, DOE requests information on how manufacturers are currently testing single-inlet semi-automatic clothes washers under Appendix J2.

e. Discarding Test Data Due to Anomalous Behavior of Unit Under Test

Section 3.2.9 of appendix J2 specifies to ''discard the data from a wash cycle that provides a visual or audio indicator to alert the user that an out-of-balance condition has been detected, or that terminates prematurely if an out-of-balance condition is detected, and thus does not include the agitation/tumble operation, spin speed(s), wash times, and rinse times applicable to the wash cycle under test.'' Aside from out-of-balance conditions, DOE seeks input on whether the test procedure should also require discarding data for wash cycles in which any other anomalous behavior may be observed. DOE also requests information on whether the test procedure should be clarified to explicitly require that any wash cycle for which data was discarded due to anomalous behavior must also be repeated to obtain data without the anomalous behavior to be included in the energy test cycle.

Issue II.B.16. DOE requests comment on whether the test procedure should exclude data from wash cycles in which any other type of anomalous behavior aside from out-of-balance conditions is observed. If so, DOE requests further comment on how such anomalies could be defined in the test procedure and detected by the testing party, particularly when testing only a single unit of a basic model (*i.e.,* with no basis for comparison against other units of the same basic model to determine whether the observed behavior is anomalous). DOE additionally requests comment on whether the test procedure should clarify that any wash cycle for which data was discarded due to anomalous behavior must be repeated to obtain valid data for that wash cycle without such anomalous behavior.

3. Test Cloth

a. Specifications

DOE originally developed the energy test cloth specifications as part of the January 2001 Final Rule, based on the results of a detailed investigation of the cloth material used for testing.[11] In particular, DOE observed that the material properties of the energy test cloth had a significant effect on the RMC measurement,[12] which was added to Appendix J1 to measure the effectiveness of the final spin cycle in

[11] *Development of a Standardized Energy Test Cloth for Measuring Remaining Moisture Content in a Residential Clothes Washer.* U.S. Department of Energy: Buildings, Research and Standards. May 2000. Available online at *http://www.regulations.gov/document?D=EERE-2006-STD-0064-0277.*

[12] The RMC measurement is an important aspect of DOE's clothes washer test procedure because the RMC value determines the drying energy, which is the biggest contributor to IMEF. Based on the Technical Support Documents from the March 2012 Final Rule, the drying energy represents 65 percent of the total energy for a 2015 baseline-level top-loading standard RCW, and 72 percent for a 2015 baseline-level front-loading standard RCW.

removing moisture from the wash load. As described in the test cloth report, the final specifications for the energy test cloth were developed to provide for the representativeness of the test cloth to a consumer load: A 50-percent cotton/50-percent polyester blended material was specified to approximate the typical mix of cotton, cotton/polyester blend, and synthetic articles that are machine-washed by consumers. DOE also considered:

- Manufacturability: A 50/50 cotton-polyester momie weave was specified because at the time, such cloth was produced in high volume, had been produced to a consistent specification for many years, and was expected to be produced on this basis for the foreseeable future.
- Consistency in test cloth production: The cloth material properties were specified in detail, including fiber content, thread count, and fabric weight; as well as requirements to verify that water repellent finishes are not applied to the cloth.
- Consistency of the RMC measurement among different lots: A procedure was developed to generate correction factors for each new ''lot'' (*i.e.,* batch) of test cloth to normalize test results and ensure consistent RMC measurements regardless of which lot is used for testing.

DOE understands that the qualification process for new test cloth lots may be burdensome and that delays in the process may periodically lead to shortages of test cloth available for purchase. Furthermore, it is possible that different energy test cloth specifications could more optimally balance the various factors addressed by the test cloth specification.

Issue II.B.17. DOE requests comments on manufacturers' and testing laboratories' experience using the current test cloth specifications and whether DOE should consider any changes to the energy test cloth specifications to reduce burden and improve testing results. DOE also seeks comment on whether it is necessary to specify any qualification procedure that must be conducted on all new lots of energy test cloth prior to use of such test cloths, as opposed to simply providing requirements for the test cloth without specifying in DOE's regulations the procedure for achieving those requirements. Industry could then continue with its current pre-qualification process, making changes as it determined necessary to improve that process, without the need to seek permission from DOE and participate in a rulemaking proceeding to make such improvements.

b. Uniformity Test

Appendix J3 specifies a qualification procedure that must be conducted on all new lots of energy test cloth prior to use of such test cloths. This qualification procedure provides a set of correction factors that correlate the measured RMC values of the new test cloth lot with a set of standard RMC values established as the historical reference point. These correction factors are applied to the RMC test results in section 3.8.2.6 of appendix J2 to ensure the repeatability and reproducibility of test results performed using different lots of test cloth. The measured RMC of each clothes washer has a significant impact on the final IMEF value.

Industry has developed a process in which this qualification test is performed by a third-party laboratory, and the results are reviewed and approved by the AHAM Test Cloth Task Force, after which the new lot of test cloth is made available for purchase by manufacturers and test laboratories.

DOE has received a request from members of the AHAM Test Cloth Task Force to add to Appendix J3 an additional qualification procedure that has historically been performed on each new lot of test cloth to ensure uniformity of RMC test results on test cloths from the beginning, middle, and end of each new lot. Industry practice is to perform this uniformity test before conducting the procedure to develop the RMC correction factors currently specified in the DOE test procedure, as described above. Specifically, the uniformity test involves performing an RMC measurement on nine bundles of sample cloth representing the beginning, middle, and end locations of the first, middle, and last rolls of cloth in a new lot. The coefficient of variation across the nine RMC values must be less than or equal to 1 percent for the test cloth lot to be considered acceptable for use.

Issue II.B.18. DOE requests comments on whether it is necessary to incorporate the aforementioned test cloth uniformity test into Appendix J3, or whether the current regulations, with the existing requirements for test cloth and qualification procedure, are sufficient to ensure the quality of the test cloth. DOE requests comment on any burden that results from the current qualification procedure, or would result from incorporating the discussed uniformity test, particularly for small businesses. As noted above, DOE also seeks comment on whether it is necessary to specify any qualification procedure that must be conducted on all new lots of energy test cloth prior to use of such test cloths, as opposed to simply providing requirements for the test cloth without specifying in DOE's regulations the procedure for achieving those requirements. Industry could then continue with its current pre-qualification process, making changes as it determined necessary to improve that process, without the need to seek permission from DOE and participate in a rulemaking proceeding to make such improvements.

c. Consolidation Into Appendix J3

Several provisions within Appendix J2 that pertain to the energy test cloth are applicable to each new lot of test cloth, but are not required to be conducted again for each individual clothes washer test performed under Appendix J2. For example, section 2.7.4.6 of Appendix J2 specifies performing American Association of Textile Chemists and Colorists (''AATCC'') Test Method 118–2007 and AATTCC Test Method 79–2010 (incorporated by reference in 10 CFR 430.3) to verify that water-repellent finishes, such as fluoropolymer stain resistant finishes, are not applied to the test cloth.

Based on discussions with the AHAM Test Cloth Task Force, DOE is aware that these AATCC test methods, among other test cloth provisions in section 2.7 of Appendix J2, are performed by a third-party laboratory on each new lot of test cloth, along with the RMC tests described previously. Once the absence of water-repellent finishes has been verified for the new lot of test cloth, the AATCC tests do not need to be conducted again for each individual Appendix J2 clothes washer test performed by manufacturers or test laboratories.

Issue II.B.19. DOE requests comments on whether to consolidate into Appendix J3 provisions from section 2.7 of Appendix J2 that relate only to the testing of the manufactured test cloth, and are not required to be performed for each individual Appendix J2 clothes washer test. DOE also seeks comment on whether to remove these provisions entirely (see Issues II.B.17 and II.B.18).

4. Capacity Measurement Alternatives

Section 3.1 of Appendix J2 provides the procedure for measuring the clothes container capacity, which represents the maximum usable volume for washing clothes. In the March 2012 Final Rule, DOE revised the clothes container capacity measurement to better reflect the actual usable capacity compared to the previous measurement procedures.

77 FR 13887, 13917. In the August 2015 Final Rule, DOE further clarified the capacity measurement procedure by incorporating a revised description of the maximum fill volume for front-loading clothes washers, as well as illustrations of the boundaries defining the uppermost edge of the clothes container for top-loading vertical-axis clothes washers and the maximum fill volume for horizontal-axis clothes washers. 80 FR 46729, 46733.

Measuring the clothes container capacity involves filling the clothes container with water and using the weight of the water to determine the volume of the clothes container. For front-loading clothes washers, this procedure requires positioning the clothes washer on its back surface such that the door opening of the clothes container faces upwards and is leveled horizontally.

DOE is aware that for some front-loading clothes washers, positioning the clothes washer on its back surface may be impractical or unsafe, particularly for very large or heavy clothes washers or those with internal components that could be damaged by the procedures outlined in section 3.1 of Appendix J2. On other clothes washers, filling the clothes container volume as described could be difficult or impractical, particularly for clothes washers with concave or otherwise complex door geometries.

Recognizing these challenges, DOE is considering whether to allow manufacturers to determine the clothes container capacity by performing a calculation of the volume based upon computer-aided design (''CAD'') models of the basic model in lieu of physical measurements of a production unit of the basic model. DOE allows a CAD-based approach for consumer refrigerators, refrigerator-freezers, and freezers, as specified at 10 CFR 429.27(c).[13]

Issue II.B.20. DOE requests comments on whether to allow CAD-based determination of clothes container capacity for clothes washers in lieu of physical measurements of a production unit of the basic model. DOE requests comments on the impacts on manufacturer burden associated with any such change to the capacity measurement procedure.

As the clothes washer market evolves to include clothes washers with increasingly larger capacities, DOE understands that for larger-capacity clothes washers, the capacity value as measured by Appendix J2, which is intended to reflect the maximum usable volume, may not necessarily result in a test method that measures the energy efficiency and water use of the clothes washer during a representative average use cycle or period of use.

In addition, DOE understands that in Europe and elsewhere (*e.g.,* the United Arab Emirates, Australia, and New Zealand), clothes washer capacity is represented in terms of the weight of clothing (*e.g.,* kilograms or pounds) that may be washed, rather than the physical volume of the clothes container. Furthermore, some international test procedures allow for the clothes washer capacity to be declared by the manufacturer, representing the maximum weight of clothing that the clothes washer is designed to successfully clean.

Some of the alternate representations of clothes washer capacity that DOE could consider include:

- A weight-based capacity, such as pounds of clothing, which could be derived from the measured volume of the clothes container in a similar manner to the way that the maximum test load is currently specified in Table 5.1 of Appendix J2 based on the measured clothes container volume.
- A clothes container capacity that is declared by the manufacturer using an industry-standard methodology. For example, IEC Standard 60456, ''Clothes washing machines for household use—Methods for measuring the performance'' Edition 5.0 (''IEC Standard 60456 Edition 5.0'') provides two optional methodologies for determining test load mass, using either table tennis balls or water.[14]

Issue II.B.21. DOE requests comment on whether to consider any changes to the representation of clothes washer capacity, including, but not limited to, a weight-based capacity or manufacturer-declared capacity based on an industry-standard methodology. Specifically, DOE requests comment on whether the two methodologies provided in IEC Standard 60456 Edition 5.0 provide capacity measurements that result in a test method that measures the energy use of the clothes washer during a representative average use cycle or period of use.

5. Cycle Selection and Settings

a. Representative Average Use

DOE recently issued an RFI to seek more information on whether its test procedures are reasonably designed, as required by EPCA, to produce results that measure the energy use or efficiency of a product during a representative average use cycle or period of use. 84 FR 9721 (Mar. 18, 2019). DOE seeks comment on this issue as it pertains to the test procedure for clothes washers, and specifically to all of the issues and comment requests set forth in the following paragraphs.

b. Load Sizes for Available Minimum and Maximum Fill Levels

Table 2.8 within section 2.8 of Appendix J2 requires that, for clothes washers with manual water fill control systems, each temperature selection that is part of the energy test cycle be tested using both the minimum and maximum water fill levels, using the minimum and maximum load sizes, respectively.[15] Section 3.2.6 of Appendix J2 describes these water fill levels as the minimum and maximum water levels available for the wash cycle under test. DOE has observed at least one clothes washer with electronic controls in which the maximum water fill level on the unit cannot be selected (*i.e.,* is ''locked out'') with one of the temperature selections required for testing; on that temperature setting, the maximum water fill that can be selected is one of the intermediate fill levels on the unit. The resulting water fill level (which is a significantly lower fill level) is thus misaligned with the maximum load size required for that particular cycle under test. Using a maximum load size with an intermediate water fill level may not provide results that measure energy efficiency and water use during a representative average use cycle or period of use, since the locking out of the maximum water fill level indicates that the particular temperature selection is not intended to be used with a maximum load size. More generally, electronic controls on such a clothes washer could lock out either the minimum or maximum water fill level available on the unit from any of the

[13] Under this approach, any value of total refrigerated volume of a basic model reported to DOE in a certification of compliance in accordance with § 429.14(b)(2) must be calculated using the CAD-derived volume(s) and the applicable provisions in the test procedures in 10 CFR part 430 for measuring volume, and must be within two percent, or 0.5 cubic feet (0.2 cubic feet for compact products), whichever is greater, of the volume of a production unit of the basic model measured in accordance with the applicable test procedure in 10 CFR part 430. See 10 CFR 429.72(c)

[14] For the table tennis ball approach, the clothes container is filled with specified table tennis balls, and an empirically determined equation is provided to convert the number of balls into a capacity value. The water approach is similar to the approach provided in section 3.1 of Appendix J2.

[15] In calculating the weighted energy consumption of a clothes washer with a manual water control system, load usage factors are applied to the minimum test loads (0.28) and maximum test loads (0.72), as described further in section II.B.7.b of this RFI. The load usage factors were based on Procter & Gamble field usage data when Appendix J was initially established. 42 FR 49802, 49809

temperature selections required for testing under Appendix J2, rendering the resulting water fill level for that temperature selection inappropriate for the maximum (or minimum) load size defined for the unit.

DOE previously addressed the issue of locked-out water fill levels in a notice of proposed rulemaking (''NOPR'') published on May 24, 1995. 60 FR 27442, 27444. At that time, three manufacturers expressed concern about the possibility of a maximum water level being locked out. DOE stated that it was not aware of any products employing such lockout designs at that time, but should such designs emerge, they could be addressed in a future rulemaking. *Id.*

DOE welcomes input from interested parties on how the test procedure should accommodate locked-out water fill levels required for testing. As discussed, the current test procedure requires that the maximum load size be tested with the maximum water fill level available in combination with the selected temperature selection, which may be a lower fill level than the maximum available on the machine and not intended for maximum size clothing loads. DOE would consider other approaches that would produce results that measure energy efficiency or water use during a representative average use cycle or period of use for this category of clothes washer.

Issue II.B.22. DOE requests comments on how clothes washers with locked-out water fill levels could be tested. DOE also requests data on the water level that consumers use on this type of clothes washer when a specific water level is locked-out.

c. Locked-Out Spin Settings

Section 3.8.4 of Appendix J2 requires that for clothes washers that have multiple spin settings [16] available within the energy test cycle that result in different RMC values, the maximum and minimum extremes of the available spin settings must be tested on the Cold/Cold temperature selection. The final RMC is the weighted average of the maximum and minimum spin settings, with the maximum spin setting weighted at 75 percent and the minimum spin setting weighted at 25 percent. DOE is aware of clothes washers on the market that offer multiple spin settings, but which offer only the maximum spin setting on the Cold/Cold temperature selection; *i.e.,* the minimum spin setting is locked out of the Cold/Cold temperature selection. This results in the lower spin setting not being factored into the RMC calculation, despite being available at other temperature selections in the energy test cycle. According to the TUF Table 4.1.1 in Appendix J2, the Cold/Cold temperature selection represents 37 percent of consumer temperature selections, with the other available temperature selections, for which the lower spin settings are available, representing a combined 63 percent of clothes washer cycles.

Issue II.B.23. DOE requests comment on testing for clothes washers that offer only the maximum spin setting on the Cold/Cold temperature selection but provide lower spin settings on other temperature selections. For example, RMC could be measured at the default spin setting for each temperature selection, and averaged using the TUFs. DOE requests data on the extent to which this or any other suggested approach measures the energy use of the clothes washer during a representative average use cycle or period of use. DOE also seeks data on the burden that may be added or reduced as a result of these other testing configurations.

Issue II.B.24. DOE requests input on whether any changes to the RMC measurement are warranted to address the issue of locked-out spin settings, taking into account the requirements that the test procedure must be reasonably designed to measure the energy use of the clothes washer during a representative average use cycle or period of use and not be unduly burdensome to conduct.

d. Four or More Warm/Cold Temperature Selections

Section 3.5 of Appendix J2 states that for a clothes washer that offers four or more Warm Wash/Cold Rinse temperature selections, either all discrete selections shall be tested, or the clothes washer shall be tested at the 25-percent, 50-percent, and 75-percent positions of the temperature selection device between the hottest hot (≤135 °F (57.2 °C)) wash and the coldest cold wash. If a selection is not available at the 25, 50 or 75-percent position, in place of each such unavailable selection, the next warmer temperature selection shall be used. Hereafter in this document, DOE refers to the latter provision as the ''25/50/75 test.''

DOE introduced the 25/50/75 test in the original version of Appendix J1, as established by the August 1997 Final Rule, out of concern regarding the test burden for clothes washers that offer a large number of intermediate warm wash temperature selections, if the test procedure were to require testing all intermediate warm temperature selections. 62 FR 45484, 45497. DOE had originally proposed a similar method [17] in the April 22, 1996 supplemental NOPR (''April 1996 SNOPR'') preceding the August 1997 Final Rule, for clothes washers having infinite warm wash selections that are non-uniformly distributed. 61 FR 17589, 17599. In the August 1997 Final Rule, DOE agreed with a suggested option to consider clothes washers with more than three warm wash temperatures to be clothes washers with infinite warm wash temperature selections, therefore allowing them to also use the 25/50/75 test. 62 FR 45484, 45498. DOE concluded at that time that testing at the various test points of the temperature range, with a requirement to test to the next higher selection if a temperature selection is not available at a specified test point, would provide data representative of the warm wash temperature selection offerings. *Id.*

DOE notes that the 25/50/75 test was adopted before the widespread use of electronic controls, which now allow for the assignment of wash water temperatures that may not reflect the physical spacing between temperature selections on the control panel. For example, with electronic controls, the 25-percent, 50-percent, and 75-percent positions on the dial may not necessarily correspond to 25-percent, 50-percent, and 75-percent temperature differences between the hottest and coldest selections. DOE is aware of clothes washers on the market with four or more warm wash temperature selections, in which the temperature selections located at the 25, 50, and 75-percent positions are low-temperature cycles that have wash temperatures only a few degrees higher than the coldest wash temperature; whereas the temperature selection labeled ''Warm'' is located beyond the 75 percent position on the temperature selection dial and is therefore not included for testing under the 25/50/75 test.

Issue II.B.25. DOE requests feedback on the representativeness of using the 25/50/75 test on clothes washers with electronic controls; particularly for clothes washers in which the 25-percent, 50-percent, and 75-percent positions on the dial do not correspond to 25-percent, 50-percent, and 75-percent temperature increments between the hottest and coldest selections.

[16] The term ''spin settings'' refers to spin times or spin speeds. The maximum spin setting results in a lower (better) RMC.

[17] The originally proposed test would have required testing at the 20/40/60/80 percent positions.

Issue II.B.26. DOE also seeks information on alternative approaches for testing clothes washers with four or more Warm Wash/Cold Rinse temperature selections that would ensure that the test procedure is reasonably designed to measure the energy use of the clothes washer during a representative average use cycle or period of use, and is not unduly burdensome to conduct. Specifically, DOE requests comment on whether there is a less burdensome means for the test procedure to be reasonably designed to measure energy use or efficiency of the clothes washer during a representative average use cycle.

e. Clothes Washers That Generate All Hot Water Internally

DOE is aware of clothes washers on the market that draw only cold water and internally generate all hot water that may be required for a cycle by means of internal heating elements. As observed on the market, these clothes washers offer cold, warm, hot, and extra hot temperature selections. As part of determining the Cold Wash/Cold Rinse temperature selection, the instruction box in the flowchart in Figure 2.12.1 of Appendix J2 refers to ''. . . multiple wash temperature selections in the Normal cycle [that] do not use any hot water for any of the water fill levels or test load sizes required for testing . . .'' DOE is considering rephrasing the text in Figure 2.12.1 of Appendix J2 to say ''. . . use *or internally generate* any heated water . . .'' (emphasis added) so that the wording of the Cold Wash/Cold Rinse flowchart in Figure 2.12.1 of Appendix J2 explicitly addresses these clothes washers. This change would reflect DOE's interpretation of the current Cold Wash/Cold Rinse flowchart and subsequent flowcharts for the Warm Wash and Hot Wash temperature selections for this type of clothes washer.

Issue II.B.27. DOE requests input on revising the phrasing of Figure 2.12.1 of Appendix J2 to specifically address the test method for clothes washers that internally generate all hot water used for a cycle by means of internal heating elements. DOE also seeks comment on whether and if so, to what extent, this change would affect the measured energy use of these clothes washers as compared to the current test procedure.

f. Non-Conventional Water Fill Control Systems

Classification of Water Fill Control Systems

Table 2.8 of Appendix J2 prescribes the required test load sizes based on the type of water fill control system (''WFCS'') on the clothes washer. Appendix J2 defines two main types of WFCS: Manual WFCS and automatic WFCS, which includes adaptive WFCS and fixed WFCS. Section 3.2.6.2 of Appendix J2 further distinguishes between user-adjustable and not-user-adjustable automatic WFCSs. Additionally, section 3.2.6.3 of Appendix J2 accommodates clothes washers that have both an automatic WFCS and an alternate manual WFCS.

As electronic control panels become more sophisticated, determining which type of WFCS is used in a particular clothes washer can be difficult. Furthermore, the use of an electronic control panel enables a clothes washer to have combinations of WFCSs that were previously unforeseen and therefore not addressed in the test procedure (*e.g.,* multiple different adaptive WFCSs, or both adaptive and fixed WFCSs). The following are examples of such clothes washers that DOE has observed on the market:

Example #1: A clothes washer that uses an adaptive WFCS but includes an optional cycle modifier, most typically in the form of a control panel button, that affects the water level by adding either more or less water than would otherwise be used by the adaptive WFCS. DOE has observed several types of such optional cycle modifiers, such as ''deep fill'' and ''water plus,'' which use more water than the default adaptive WFCS; and ''eco,'' which uses less water than the default adaptive WFCS.

Example #2: A clothes washer that defaults to a fixed maximum water level if the user takes no action (*i.e.,* a fixed WFCS), and that offers a single optional button that provides a lower fill level than the default fill level if activated.

Example #3: A clothes washer with a control panel that allows the user to choose between two separate automatic WFCSs: One of which is an adaptive WFCS, and the other is a fixed WFCS that provides the maximum fill level regardless of load size (*e.g.,* ''deep fill'').

Example #4: A clothes washer with a control panel that allows the user to choose between two separate adaptive WFCSs: One that provides more efficient performance; and the other that provides higher fill levels, both of which adapt to the size of the clothing load.

Example #5: A clothes washer with a separate cycle labeled ''deep fill,'' as an alternative to the Normal cycle.

Issue II.B.28. DOE requests input on whether any changes are warranted for the definitions of automatic WFCS, manual WFCS, adaptive WFCS, and fixed WFCS, specifically in the context of clothes washers currently on the market, and whether the current definitions appropriately reflect the products currently available. DOE also requests input on whether a definition of user-adjustable automatic WFCS should be considered, and if so, how it could be defined to best reflect the type of user-adjustable WFCSs currently on the market. Comments are also welcome on whether a less complex method of WFCS differentiation could be used that would still result in the test procedure being reasonably designed to measure energy efficiency and water use of clothes washers during a representative average use cycle or period of use, and not be unduly burdensome to conduct.

Issue II.B.29. As an alternative to considering revisions to the definitions of each type of WFCS, DOE could consider alternate approaches, such as using a flow chart—similar to the energy test cycle flowcharts in section 2.12 of Appendix J2—to guide the determination of which type of WFCS is available on a clothes washer. DOE requests comment on such an approach.

Issue II.B.30. DOE requests input on an approach that would result in a measurement of energy and water use during a representative average use cycle for clothes washers with unconventional WFCSs, such as in the examples provided, including the impacts on manufacturer burden associated with any such approach.

Test Cycles and Calculations

Section 3.2.6.3 of Appendix J2 states that if a clothes washer with an automatic WFCS allows consumer selection of manual controls as an alternative, both the manual and automatic modes are tested. The energy and water consumption values are measured separately under each mode and then averaged; the average values are then used in the final calculations in section 4 of Appendix J2. The averaging of each value implies a 50-percent usage factor for each of the available WFCSs on the clothes washer.

Section 3.2.6.2.2 of Appendix J2 provides instructions for a clothes washer with a user-adjustable automatic WFCS. For this type of WFCS, four tests are conducted: (1) The first test uses the maximum test load and the automatic WFCS set in the setting that will give the most energy intensive result; (2) the second test uses the minimum test load and the automatic WFCS set in the setting that will give the least energy intensive result; (3) the third test uses the average test load and the automatic WFCS set in the setting that will give the most energy intensive result for the

given test load; and (4) the fourth test uses the average test load and the automatic WFCS set in the setting that will give the least energy intensive result for the given test load. The energy and water consumption for the average test load are the average of the third and fourth tests' results.

Issue II.B.31. DOE requests comment on whether the above test procedure requiring four separate tests meets the EPCA requirements of measuring the energy and water use during a representative average use cycle and not being unduly burdensome to conduct, and whether an approach that required less than four tests would meet this EPCA requirement.

Issue II.B.32. DOE requests comments on the representativeness of the WFCS setting and load size combinations tested for clothes washers with both automatic and manual WFCSs, as well as clothes washers with user-adjustable automatic WFCSs.

g. Wash Time Setting

Section 3.2.5 of Appendix J2 defines how to select the wash time setting on a clothes washer. If no one wash time is prescribed for the wash cycle under test, the wash time setting is the higher of either the minimum or 70 percent of the maximum wash time available, regardless of the labeling of suggested dial locations. Hereafter in this document, DOE refers to this provision as the ''70-percent test.''

In the March 2012 Final Rule, DOE added instructions to the wash time section of Appendix J1 and Appendix J2 that specified the direction of rotation of electromechanical dials, and that the 70-percent test applies regardless of the labeling of suggested dial locations. 77 FR 13887, 13927. In the August 2015 Final Rule, DOE specified that, if 70-percent of the maximum wash time is not available on a dial with a discrete number of wash time settings, the next-highest setting greater than 70-percent must be chosen. 80 FR 46729, 46745. DOE is considering, as described in the following sections, whether additional changes to section 3.2.5 of Appendix J2 are warranted to provide further clarity, particularly with regard to how the wash time setting should be interpreted for electronic control dials.

Clarification for Electronic Cycle Selection Dials

DOE has observed on the market clothes washers that have an electronic cycle selection dial designed to visually simulate a conventional electromechanical dial.[18] In particular, DOE has observed clothes washers with an electronic dial that offers multiple Normal cycle selections; for example, ''Normal-Light,'' ''Normal-Medium,'' and ''Normal-Heavy,'' with the descriptor referring to the soil level of the clothing. On such clothes washers, the only difference between the three Normal cycles apparent to consumers when performing each cycle may be the wash time, although other less observable parameters may also differ. Although the electronic dial simulates the visual appearance of an electromechanical dial, the electronic dial is programmed with a pre-established set of wash cycle parameters, including wash time, for each of the discrete cycle selections presented on the machine. For this type of cycle selection dial, each of the discrete cycle selection options represents a selectable ''wash cycle'' as referred to in section 3.2.5 of Appendix J2, and a wash time is prescribed for each available wash cycle. Therefore, for clothes washers with this type of electronic dial, the wash cycle selected for testing must correspond to the wash cycle that meets the definition of Normal cycle in section 1.25 of Appendix J2. The wash time setting thus would be the prescribed wash time for the selected wash cycle; *i.e.,* the 70-percent test would not apply to this type of dial. DOE is considering whether any changes to section 3.2.5 of Appendix J2 are warranted to qualify further which type of dial would be subject to the 70-percent test.

Issue II.B.33. DOE requests feedback on whether section 3.2.5 of Appendix J2 should be further clarified regarding electronic cycle selection dials that visually simulate conventional electromechanical dials.

Direction of Dial Rotation

Section 3.2.5 of Appendix J2 also states that, for clothes washers with electromechanical dials controlling wash time, the dial must be turned in the direction of increasing wash time to reach the appropriate wash time setting. DOE is aware that not all electromechanical dials currently on the market can be turned in the direction of increasing wash time. On such models, the dial can only be turned in the direction of decreasing wash time. DOE believes that the direction of rotation need only be prescribed on a clothes washer with an electromechanical dial that can rotate in both directions. Therefore, DOE is considering further amending section 3.2.5 of Appendix J2 to clarify that the requirement to rotate the dial in the direction of increasing wash time applies only to dials that can rotate in both directions.

Issue II.B.34. DOE requests comment on its understanding of the functioning of dials currently on the market, specifically with regard to the direction(s) of rotation and whether the wording of section 3.2.5 of Appendix J2 warrants revision to clarify that the requirement to rotate the dial in the direction of increasing wash time applies only to dials that can rotate in both directions.

''Wash Time'' Terminology

Finally, DOE is considering whether to state that the phrase ''wash time'' in section 3.2.5 of Appendix J2 refers to the period of agitation or tumble. This clarification would be consistent with the historical context of this section of the test procedure. In Appendix J as established by the September 1977 Final Rule, section 2.10 *Clothes washer setting* defined ''wash time'' as the ''period of agitation.'' As part of the January 2001 Final Rule, DOE amended section 2.10 of Appendix J by renaming it *Wash time (period of agitation or tumble) setting.*[19] 66 FR 3313, 3330. When establishing Appendix J1 in the August 1997 Final Rule, DOE did not include reference to ''period of agitation'' in section 2.10 of Appendix J1. 62 FR 45484, 45510. DOE did not address this difference from Appendix J in the preamble of the August 1997 Final Rule or the NOPRs that preceded that final rule, but given the continued reference to ''wash time'' in Appendix J1, did not intend to change the general understanding that wash time refers to the wash portion of the cycle, which includes agitation or tumble time. DOE has since further amended section 2.10 of both Appendix J1 and Appendix J2 as part of the March 2012 Final Rule and August 2015 Final Rule (in which section 2.10 was renumbered as section 3.2.5), with no discussion in these final rules of the statement that remained in Appendix J, where wash time referred to agitation or tumble time. DOE further notes that in current RCW models on the market, agitation or tumble may be

[18] On most electromechanical dials, the rotational position of the dial corresponds to the desired wash time. The user rotates the dial from the initial ''off'' position to the desired wash time position, and after starting the wash cycle, the dial rotates throughout the progression of the wash cycle until it reaches the off position at the end of the cycle. In contrast, an electronic dial contains a fixed number of selectable positions, and the dial remains in the selected position for the duration of the wash cycle.

[19] In this context, ''agitation'' refers to the wash action of a top-loading clothes washer, whereas ''tumble'' refers to the wash action of a front-loading clothes washer.

periodic or continuous during the wash portion of the cycle.

Issue II.B.35. DOE requests feedback on whether DOE should consider reincorporating language into section 3.2.5 of Appendix J2 to clarify that the term ''wash time'' refers to the wash portion of the cycle, including agitation or tumble time.

h. Optional Cycle Modifiers

Section 3.2.7 of Appendix J2 states that for clothes washers with electronic control systems, the manufacturer default settings must be used for any cycle selections, except for (1) the temperature selection, (2) the wash water fill levels, or (3) if necessary, the spin speeds on wash cycles used to determine RMC. Specifically, the manufacturer default settings must be used for wash conditions such as agitation/tumble operation, soil level, spin speed on wash cycles used to determine energy and water consumption, wash times, rinse times, optional rinse settings, water heating time for water-heating clothes washers, and all other wash parameters or optional features applicable to that wash cycle. Any optional wash cycle feature or setting (other than wash/rinse temperature, water fill level selection, or spin speed on wash cycles used to determine RMC) that is activated by default on the wash cycle under test must be included for testing unless the manufacturer instructions recommend not selecting this option, or recommend selecting a different option, for washing normally soiled cotton clothing.

Issue II.B.36. DOE seeks comment on whether testing of cycle settings other than the manufacturer default settings would measure the energy efficiency and water use of the clothes washer during a representative average use cycle or period of use. DOE also seeks comment on whether the non-default selections required by the current DOE test procedure meet this requirement.

DOE has observed a trend towards increased availability of optional cycle modifiers such as ''deep fill,'' as described previously in this document, and ''extra rinse,'' among others. These optional settings may significantly impact the water and/or energy consumption of the clothes washer when activated. DOE has observed that the default setting of these optional settings on the Normal cycle is most often in the off position; *i.e.,* the least energy- and water-intensive setting. The growing presence of such features may, however, be indicative of an increase in consumer demand and/or usage of these features.

Issue II.B.37. DOE requests information regarding how frequently consumers use ''deep fill,'' ''extra rinse,'' or other cycle modifiers, as well as whether (and if so, by how much) such modifiers may increase the energy or water consumption of a wash cycle compared to the default settings on the Normal cycle. DOE also requests comment on whether testing these features in the default settings would produce test results that measure energy efficiency and water use of clothes washers during a representative average use cycle or period of use, and the burden of such testing on manufacturers.

6. Wash/Rinse Temperature Selections for Semi-Automatic Clothes Washers

Section II.B.2.d of this document discussed the installation of single-inlet semi-automatic clothes washers. This section discusses the wash/rinse temperature selections and TUFs applicable to all semi-automatic clothes washers. Semi-automatic clothes washers are defined at 10 CFR 430.2 as a class of clothes washer that is the same as an automatic clothes washer except that user intervention is required to regulate the water temperature by adjusting the external water faucet valves. DOE's test procedure requirements at 10 CFR 430.23(j)(2)(ii) state that the use of Appendix J2 to determine IMEF is required for both automatic and semi-automatic clothes washers. Similarly, the IWF measurement requirements at 10 CFR 430.23(j)(3)(ii) apply to ''clothes washer[s],'' which is defined in 10 CFR 430.2 to include semi-automatic clothes washers.

Semi-automatic clothes washers do not provide wash/rinse temperature selections on the control panel, and any combination of cold, warm, and hot wash temperatures and rinse temperatures can be implemented by the user. The following discussion provides relevant historical context on this issue.

Section 6.1 of Appendix J–1977 [20] and Appendix J–1997 provided TUFs for the following wash/rinse temperature combinations for semi-automatic clothes washers: Hot/Hot, Hot/Warm, Hot/Cold, Warm/Warm, Warm/Cold, and Cold/Cold. The definition of these TUFs indicated that these six wash/rinse temperature combinations were required for testing. Section 3.2.2.6 of Appendix J–1977 and Appendix J–1997 and section 3.2.3.1.6 of Appendix J1–1997 and Appendix J1–2001 provided a table indicating the following external water faucet valve positions required to achieve each wash and rinse temperature selection:

- *Hot:* Hot valve completely open, cold valve closed;
- *Warm:* Hot valve completely open, cold valve completely open; and
- *Cold:* Hot valve closed, cold valve completely open.

Under Appendix J–1977 and Appendix J–1997, the Hot/Hot, Warm/Warm, and Cold/Cold temperature combinations were tested for semi-automatic clothes washers without regulating the water temperature between the wash and rinse portions of the cycle. However, for the Hot/Warm, Hot/Cold, and Warm/Cold temperature combinations to be tested, Appendix J–1977 and Appendix J–1997 required the test administrator to manually regulate the water temperature in between the wash and rinse portions of the cycle by adjusting the external water faucet valves. As reflected in DOE's definition of semi-automatic clothes washer, user intervention is required to regulate the water temperature of all semi-automatic clothes washers (*i.e.,* user regulation of water temperature is the distinguishing characteristic of a semi-automatic clothes washer).

When it established Appendix J1–1997, DOE combined all of the TUF tables—for both automatic and semi-automatic clothes washers—that were also provided in section 5 and section 6 of Appendix J–1997 into a single condensed table in Table 4.1.1 of Appendix J1–1997. 62 FR 45484, 45512. In contrast to Appendix J–1997, which provided separate TUF tables for every possible set of available wash/rinse temperature selections, the new simplified table in Appendix J1–1997 was organized into columns based on the number of wash temperature selections available on a clothes washer. Warm rinse was considered separately within each column of the table. *Id.* In the current version of Appendix J2, Table 4.1.1 remains a single simplified table, although in the August 2015 Final Rule, DOE clarified the column headings by listing the wash/rinse temperature selections applicable to each column. 80 FR 46729, 46782.

The simplified Table 4.1.1 in Appendix J2 does not state which column(s) of the table are applicable to semi-automatic clothes washers. In the May 2012 Direct Final Rule, DOE stated that it was not aware of any semi-automatic clothes washers on the

[20] Throughout this section, to distinguish different versions of each test method, DOE uses the following nomenclature: Appendix [letter]-[year of amendment]. For example, the original version of Appendix J is referred to as Appendix J–1977. The version as amended by the August 1997 Final Rule is referred to as Appendix J–1997, and so forth.

market. 77 FR 32307, 32317. However, DOE is currently aware of several semi-automatic clothes washer model available in the U.S. market.

Issue II.B.38. DOE requests input on whether the test procedure should be amended with regard to the specificity of wash/rinse test combinations for semi-automatic clothes washers in Appendix J2, and whether those updates would provide test results that measure energy efficiency and water use during a representative average use cycle or period of use, and whether they would be unduly burdensome to conduct.

7. Usage Factors

DOE requests information on whether, in accordance with 42 U.S.C. 6293(b)(3), the consumer usage factors incorporated into the test procedure produce test results that measure energy efficiency and water use of clothes washers during a representative average use cycle or period of use. DOE also seeks comment on whether testing cycle configurations with usage factors below a certain percentage would be unduly burdensome to conduct and would not be considered to be reasonably designed to measure energy and water use during a representative average use cycle or period of use because they are rarely used by consumers.

a. Temperature Usage Factors

As described in section II.B.6 of this document, TUFs are weighting factors that represent the percentage of wash cycles for which consumers choose a particular wash/rinse temperature selection. The TUFs in Table 4.1.1 of Appendix J2 are based on the TUFs introduced in Appendix J1–1997 by the August 1997 Final Rule. As described in the April 1996 SNOPR, DOE established the TUFs in Appendix J1–1997 based on an analysis of consumer usage data provided by Procter & Gamble (''P&G''), the Association of Home Appliance Manufacturers (''AHAM''), General Electric Company (''GE''), and Whirlpool Corporation (''Whirlpool''), as well as linear regression analyses performed by P&G and the National Institute of Standards and Technology (''NIST''). 61 FR 17589, 17593. DOE understands that consumer usage patterns may have changed since the introduction of Table 4.1.1 in Appendix J1–1997.

DOE recognizes that some possible combinations of wash/rinse temperature selections that could be offered on a clothes washer are not represented in Table 4.1.1 (*e.g.,* the current table would not accommodate a clothes washer that offers only Extra-Hot/Cold and Cold/Cold wash/rinse temperature selections).

Issue II.B.39. DOE requests data on current consumer usage frequency of the wash/rinse temperature selections required for testing in Appendix J2.

Issue II.B.40. DOE requests input on whether requiring measurement of cycle selections with low TUFs (for example, the current Table 4.1.1 lists TUFs including 5, 9, and 14 percent) is consistent with the EPCA requirement that the test procedure be reasonably designed to measure the energy use or efficiency of the clothes washer during a representative average use cycle or period of use, and not be unduly burdensome to conduct.

Issue II.B.41. DOE requests information on whether any combinations of wash/rinse temperature selections not currently represented in Table 4.1.1 of Appendix J2 exist. DOE also seeks data to support how the TUFs for such combinations could be defined to ensure that the test procedure measures energy and water consumption during a representative average use cycle or period of use. DOE also seeks comments on whether any of the combinations in Table 4.1.1 should be removed as not reasonably designed to measure the energy use of the clothes washer during a representative average use cycle or period of use.

For semi-automatic clothes washers, DOE is considering whether amendments with regard to the specificity of wash/rinse temperature combinations and associated TUFs for semi-automatic clothes washers in Appendix J2 would provide test results that are reasonably designed to measure energy and water consumption during a representative average use cycle or period of use. As discussed in section II.B.6 of this RFI, Appendix J specified TUFs for semi-automatic clothes washers for six wash/rinse temperature combinations. Appendix J2 does not currently provide separate TUFs for semi-automatic clothes washers. Because the wash and rinse temperatures on a semi-automatic clothes washer are controlled directly by the consumer by adjusting the hot and cold water faucets, DOE understands that the appropriate TUFs for semi-automatic clothes washers that best reflect energy and water consumption during a representative average use cycle or period of use may be different from those of automatic clothes washers.

Issue II.B.42. DOE requests input on whether to specify TUFs for semi-automatic clothes washers in Appendix J2, and if so, how the TUFs should be defined to be reasonably designed to measure energy and water consumption during a representative average use cycle or period of use for semi-automatic clothes washers.

b. Load Usage Factors

Load Usage Factors (''LUFs'') are weighting factors that represent the percentage of wash cycles that consumers run with a given load size. Table 4.1.3 of Appendix J2 provides two sets of LUFs based on whether the clothes washer has a manual WFCS or automatic WFCS.

For a clothes washer with a manual WFCS, the two LUFs represent the percentage of wash cycles for which consumers choose the maximum water fill level and minimum water fill level, regardless of the actual load size. For a clothes washer with an automatic WFCS, the three LUFs represent the percentage of cycles for which the consumer washes a minimum-size, average-size, and maximum-size load. The values of these LUFs are intended to approximate a normal distribution that is slightly weighted towards the minimum load size. This distribution is based on consumer load size data provided by P&G in support of the development of Appendix J1–1997.[21]

Issue II.B.43. DOE requests data on current consumer usage as related to the LUFs and whether any updates to the LUFs in Table 4.1.3 of Appendix J2 are warranted to reflect current consumer usage patterns. DOE specifically requests comment on whether the use of certain LUFs in the test procedure is consistent with the EPCA requirement that the test procedure be reasonably designed to measure energy and water use during a representative average use cycle or period of use without being unduly burdensome to conduct, because certain load sizes may be rarely used by consumers.

c. Load Size Table

Table 5.1 of Appendix J2 provides the minimum, average, and maximum load sizes to be used for testing based on the measured capacity of the clothes washer. The table defines capacity ''bins'' in 0.1 cu.ft. increments. The load sizes for each capacity bin are determined as follows:

- Minimum load is 3 pounds (''lb'') for all capacity bins;
- Maximum load (in lb) is equal to 4.1 times the mean clothes washer

[21] The P&G load size data are provided on pages 13–20 in legacy Docket EE–RM–94–230A Comment 25, which is archived on the *regulations.gov* website under Docket EERE–2006–TP–0065 Comment 27. Available at *https://www.regulations.gov/document?D=EERE-2006-TP-0065-0027.*

capacity of each capacity bin (in cu.ft.); and

• Average load is the arithmetic mean of the minimum load and maximum load.

DOE originally introduced the load size table in Appendix J1 in the August 1997 Final Rule, which accommodated clothes container capacities up to 3.8 cu.ft. This load size table was provided by AHAM as part of AHAM's recommended test procedure changes for Appendix J1, as described in the April 1996 SNOPR. 61 FR 17589, 17595.

In the March 2012 Final Rule, DOE expanded Table 5.1 to accommodate clothes container capacities up to 6.0 cu.ft. 77 FR 13887, 13910. DOE extrapolated the load sizes to 6.0 cu.ft. using the same equations to define the maximum and average load sizes as described previously.

On May 2, 2016 and April 10, 2017, DOE granted waivers to Whirlpool and Samsung Electronics America Inc., respectively, for testing RCWs with capacities between 6.0 and 8.0 cu.ft.,[22] by further extrapolating Table 5.1 using the same equations to define the maximum and average load sizes as described previously. 81 FR 26215, 82 FR 17229. DOE's regulations in 10 CFR 430.27 contain provisions allowing any interested person to seek a waiver from the test procedure requirements if certain conditions are met. A waiver allows manufacturers to use an alternative test procedure in situations where the DOE test procedure cannot be used to test the product or equipment, or where use of the DOE test procedure would generate unrepresentative results. 10 CFR 430.27(a)(1) DOE's regulations at 10 CFR 430.27(l) require that as soon as practicable after the granting of any waiver, DOE will publish in the **Federal Register** a NOPR to amend its regulations so as to eliminate any need for the continuation of such waiver. As soon thereafter as practicable, DOE will publish in the **Federal Register** a final rule. Therefore, DOE will consider amending its test procedure to accommodate RCWs with capacities up to 8.0 cu.ft. as part of a future rulemaking.

Note that section II.B.4 of this document provides additional discussion regarding potential alternative approaches for representing clothes container capacity that DOE could consider, which might suggest a different solution for addressing larger-capacity clothes washers than extrapolation of the existing Table 5.1.

Issue II.B.44. DOE requests comment on whether Table 5.1 of Appendix J2 should be extrapolated to accommodate RCW capacities up to 8.0 cu.ft., and if so, appropriate methods for extrapolation. More generally, DOE also requests data and information on whether the minimum, average, and maximum load size definitions in Table 5.1 are representative of the range of load sizes used by consumers for each capacity bin in the table, particularly for larger-capacity RCWs.[23]

d. Dryer Usage Factor

The dryer usage factor (''DUF'') represents the percentage of clothes washer loads dried in a clothes dryer. The DUF is used in section 4.3 of Appendix J2 in the equation for calculating the per-cycle energy required to remove the remaining moisture of the test load (*i.e.,* ''drying energy'').

DOE first introduced the drying energy equation in Appendix J1 as part of the August 1997 Final Rule. DOE originally established a DUF value of 0.84, which was based in part on data provided by P&G, as described in the April 1996 SNOPR. 61 FR 17589, 17592; 62 FR 45484, 45489.

In the March 2012 Final Rule, DOE revised the DUF in Appendix J2 to 0.91 based on updated consumer usage data from the Energy Information Administration (''EIA'') 2005 Residential Energy Consumption Survey (''RECS''). 77 FR 13887, 13913.

Issue II.B.45. DOE specifically requests comment on whether the DUF in the test procedure is consistent with the EPCA requirement that the test procedure be reasonably designed to measure energy and water use during a representative average use cycle or period of use without being unduly burdensome to conduct, because certain drying cycles may be rarely used by consumers. DOE also requests data and information on whether any further adjustments to the DUF are warranted to reflect current consumer usage patterns.

e. Spin Speed Usage Factors

Section 3.8.4.1 of Appendix J2 provides weighting factors for calculating the RMC value for clothes washers that have options such as multiple spin speeds or spin time settings that result in different RMC values, and that are available within the energy test cycle. The equation in section 3.8.4.1 of Appendix J2 assigns a 75-percent usage factor to the maximum spin setting and a 25-percent usage factor to the minimum spin setting. In originally establishing the spin setting usage factors in Appendix J–1997, DOE considered P&G usage factor data for normal/regular cycle usage (in which maximum water extraction is assumed) as compared to delicate and permanent-press cycle usage (in which minimum water extraction is assumed). 62 FR 45484, 45489; see also AHAM comment in docket EE–RM–94–230A, pp. 2 and 8.[24] DOE determined that the consumers washing less durable articles of clothing would refrain from using a higher spin cycle to prevent possible fabric damage, and that the spin setting usage factors correlated to the use of normal/regular cycle usage as compared to delicate and permanent-press cycle usage. *Id.*

Note that section II.B.5.c of this document provides additional discussion regarding potential alternative approaches that DOE could consider for clothes washers with multiple spin speeds, which might suggest a different solution than maintaining the existing spin speed usage factors.

Issue II.B.46. DOE requests data and information on whether current consumer usage patterns warrant any adjustments to the spin speed usage factors. In particular, DOE requests consumer usage data regarding the selection of spin speeds on clothes washers that offer multiple spin speeds, and particularly the percentage of wash cycles for which consumers use the default spin settings. DOE also requests comment on whether the use of certain spin speed usage factors in the test procedure is consistent with the EPCA requirement that the test procedure be reasonably designed to measure energy and water use during a representative average use cycle or period of use without being unduly burdensome to conduct, because certain spin speeds may be rarely used by consumers.

f. Annual Number of Wash Cycles

Section 4.4 of Appendix J2 provides the representative average number of annual clothes washer cycles for the purpose of translating the annualized inactive and off mode energy consumption measurements into a per-cycle value applied to each active mode wash cycle. Separately, the number of annual wash cycles is also referenced in DOE's test procedure provisions at 10 CFR 430.23(j)(1)(i)(A) and (B), (j)(1)(ii)(A) and (B), and (j)(3)(i) and (ii) for the purpose of calculating annual

[22] As noted, CCWs are limited under the statutory definition to a maximum capacity of 3.5 cubic feet for horizontal-axis CCWs and 4.0 cubic feet for vertical-axis CCWs. 42 U.S.C. 6311(21).

[23] DOE notes that the load size definitions could be considered independently from, or in conjunction with, the LUFs, as described in the previous section of this document.

[24] Available at: *https://www.regulations.gov/document?D=EERE-2006-TP-0065-0011.*

operating cost and annual water consumption of a clothes washer.

In the August 1997 Final Rule, DOE estimated the representative number of annual wash cycles per RCW to be 392, which represented the average number of cycles per year from 1986 through 1994, based on P&G survey data provided to DOE as described in a NOPR published on March 23, 1995. 60 FR 15330, 15335; 62 FR 45484, 45501.

In the March 2012 Final Rule, DOE updated the representative number of wash cycles per year to 295 based on an analysis of the 2005 RECS data. 77 FR 13887, 13909. More recently, analysis of the 2009 RECS data suggests 284 cycles per year, and analysis of the 2015 RECS data (the most recent available) suggests 234 cycles per year.

Issue II.B.47. DOE requests data and information on whether any further adjustments to the number of annual wash cycles are warranted to reflect current RCW consumer usage patterns, as suggested by RECS data.

g. Low-Power Mode Usage Factors

Section 4.4 of Appendix J2 allocates 8,465 combined annual hours for inactive and off modes. If a clothes washer offers a switch, dial, or button that can be optionally selected by the user to achieve a lower-power inactive/off mode than the default inactive/off mode, section 4.4 assigns half of those hours (*i.e.,* 4,232.5 hours) to the default inactive/off mode and the other half to the optional lowest-power inactive/off mode. This allocation is based on an assumption that if a clothes washer offers such a feature, consumers will select the optional lower-power mode half of the time. 77 FR 13887, 13904. The allocation of 8,465 hours to combined inactive and off modes is based on an assumption of 295 active mode hours (assuming one hour per active mode wash cycle), for a total of 8,760 hours per year for all operating modes.

Issue II.B.48. DOE requests input on whether the annual hours allocated to combined inactive and off modes, as well as the assumed 50-percent split between default inactive/off mode and any optional lower-power inactive/off mode, result in a test method that measures the energy efficiency of the clothes washer during a representative average use cycle or period of use and would not be unduly burdensome to conduct.

8. Associated Equipment Efficiencies

a. Water Heater Efficiencies

Section 4.1.2 of Appendix J2 provides equations for calculating total per-cycle hot water energy consumption for all water fill levels tested. The hot water energy consumption is calculated by multiplying the measured volume of hot water by a constant fixed temperature rise of 75 °F and by the specific heat of water, defined as 0.00240 kilowatt-hours per gallon per degree Fahrenheit (kWh/gal-°F). No efficiency or loss factor is included in this calculation, which implies an electric water heater efficiency of 100 percent.

Similarly, section 4.1.4 of Appendix J2 provides an equation for calculating total per-cycle hot water energy consumption using gas-heated or oil-heated water, for product labeling requirements.[25] This equation includes a multiplication factor ''e,'' representing the nominal gas or oil water heater efficiency, defined as 0.75.

These water-heating energy equations estimate the energy required by the household water heater to heat the hot water used by the clothes washer. Per-cycle hot water energy consumption is one of the four energy components in the IMEF metric.

Issue II.B.49. DOE requests input on whether any updates are warranted to the water heater efficiency values implied in section 4.1.2 and provided in section 4.1.4 of Appendix J2.

b. Drying Energy

Section 4.3 of Appendix J2 provides an equation for calculating total per-cycle energy consumption for removal of moisture from the test load in a clothes dryer; *i.e.,* the ''drying energy.'' The drying energy calculation is based on the following three factors: (1) A clothes dryer final RMC of 4 percent; (2) a clothes dryer energy factor (''DEF''), which is defined as 0.5 kWh/lb and represents the nominal energy required for a clothes dryer to remove moisture from a pound of clothes; and (3) the DUF which, as described previously in this document, is defined as 0.91 and represents the percentage of clothes washer loads dried in a clothes dryer. DOE is soliciting information to determine whether the final RMC value after drying and the DEF value should be revised as a result of recent updates to the DOE clothes dryer test procedure and any market changes due to the most recent energy conservation standards for clothes dryers.

DOE's test procedure for clothes dryers, codified at 10 CFR part 430, subpart B, appendix D1 (''Appendix D1''), prescribes a final RMC of between 2.5 and 5.0 percent, which is consistent with the 4-percent final RMC value in the clothes washer test procedure for determination of the DEF. However, DOE's alternate clothes dryer test procedure, codified at 10 CFR part 430, subpart B, appendix D2 (''Appendix D2''), prescribes a final RMC of between 1 and 2.5 percent for timer dryers, which are clothes dryers that can be preset to carry out at least one operation to be terminated by a time, but may also be manually controlled and do not include any automatic termination function. For automatic termination control dryers, which can be preset to carry out at least one sequence of operations to be terminated by means of a system assessing, directly or indirectly, the moisture content of the load, the test cycle is deemed invalid if the clothes dryer terminates the cycle at a final RMC greater than 2 percent. In the final rule establishing Appendix D2, DOE determined that a clothes dryer final RMC of 2 percent using the DOE test load would be more representative of clothes dryers currently on the market in that generally consumers would find a final RMC above this level unacceptable. Timer dryers are provided with a range of allowable final RMC during the test because DOE concluded that it would be unduly burdensome to require the tester to dry the test load to an exact RMC; however, the measured test cycle energy consumption for timer dryers is normalized to calculate the energy consumption required to dry the test load to 2-percent final RMC. 78 FR 49607, 49612–49624 (Aug. 14, 2013). Manufacturers may elect to use Appendix D2 to demonstrate compliance with the January 1, 2015, energy conservation standards; however, the procedures in Appendix D2 need not be performed to determine compliance with energy conservation standards for clothes dryers at this time.

Issue II.B.50. DOE requests input on whether the final RMC value in the drying energy calculation in Appendix J2 should be revised to align with the DOE clothes dryer test procedure at Appendix D2 or another value that is representative of clothes dryers currently on the market.

Issue II.B.51. DOE requests input on whether the current value of the DEF is representative of the nominal energy required for a clothes dryer to remove moisture from a pound of clothes, or whether an alternative value would be more representative.

[25] The Federal Trade Commission's EnergyGuide label for RCWs includes the estimated annual operating cost using natural gas water heating.

9. Non-Conventional Features

a. Clothes Washers With an Additional Wash System

DOE is aware of ''auxiliary'' or ''supplementary'' RCWs designed to accompany a standard-size RCW from the same manufacturer. In one configuration, a top-loading wash drum (*i.e.,* ''auxiliary'' clothes washer) is integrated into the top of a standard-size front-loading clothes washer (*i.e.,* ''primary'' clothes washer). The primary front-loading clothes washer and the auxiliary top-loading clothes washer are powered through a single electrical plug; however, the primary clothes washer and the auxiliary clothes washer have separate control systems and can be operated independently from one another. Another configuration comprises a top-loading RCW sold as a separate product (*i.e.,* ''supplementary'' clothes washer) with independent controls and a separate electrical plug, and which is designed to be installed underneath certain front-loading RCWs within the space of a conventional pedestal or riser.

Because such auxiliary and supplementary clothes washers are installed in conjunction with a primary clothes washer, the presence and operation of two separate clothes washers may affect consumer usage patterns for both the primary and auxiliary or supplementary clothes washers, compared to if the consumer had only a primary clothes washer. For example, separating certain items from a clothing load to be washed in the auxiliary or supplementary clothes washer would reduce the size of the clothing load washed in the primary clothes washer or could result in fewer cycles being run in the primary clothes washer.

Additionally, in the case of an auxiliary clothes washer, which is integrated with the primary clothes washer and powered through a single electrical plug, the standby power might be ''double counted'' for both the primary clothes washer and the auxiliary clothes washer, since the standby power consumed by both clothes washers would be measured through the single electrical plug during both independent tests.

Issue II.B.52. DOE requests information on whether or how the presence of an auxiliary or supplementary clothes washer may affect usage patterns in the primary clothes washer.

Issue II.B.53. DOE requests input on the appropriate allocation of combined low-power mode energy consumption between auxiliary and primary clothes washers that are powered through a single electrical plug.

b. Clothes Washers With a Pre-Treat Soaking Basin

DOE is aware of RCWs that contain a built-in basin that can be used to pre-treat and soak clothing before the start of a wash cycle. As observed among models currently on the market, the soaking basin is separate from the main clothing drum and is filled with water through an auxiliary water nozzle separate from the water fill control system used for the main clothing drum. As described in the user manual, the pre-treat and soaking feature is recommended to be used before the RCW begins its main wash cycle operation. As observed among models currently on the market, use of the built-in basin and auxiliary water nozzle are not considered part of active washing mode, as defined by section 1.2 of Appendix J2.

Issue II.B.54. DOE requests consumer usage data on built-in pre-treat soak basins, as well as information on the amount of energy and water these basins typically use. DOE also requests information on whether and to what extent the energy and water use in the subsequent wash cycle would be impacted by the transfer of water and wet clothing from the pre-treat basin to the clothes washer drum.

C. Metrics

In addition to adjustments to the current test procedure to produce MEF, IMEF, and IWF values that reflect current clothes washers and consumer use, DOE may also consider in a future rulemaking broader changes to key metrics that would, for example, harmonize the DOE test procedure with other industry test methods. In particular, DOE may consider changes to the energy efficiency metric and the water efficiency metric. DOE may also consider adjustments to the annual energy calculation.

1. Energy Efficiency Metric

The current energy efficiency standards for RCWs are based on the IMEF metric, measured in cu.ft./kWh/cycle, as calculated in section 4.6 of Appendix J2. IMEF is calculated as the capacity of the clothes container (in cu.ft.) divided by the total clothes washer energy consumption (in kWh) per cycle. The total clothes washer energy consumption per cycle is the sum of: (a) The machine electrical energy consumption; (b) the hot water energy consumption; (c) the energy required for removal of the remaining moisture in the wash load; and (d) the combined low-power mode energy consumption.

The current energy efficiency standards for CCWs are based on the MEF_{J2} metric, measured in cu.ft./kWh/cycle, as determined in section 4.5 of Appendix J2. The MEF_{J2} metric differs from the IMEF metric by not including the combined low-power mode energy consumption in the total clothes washer energy consumption per cycle.

DOE could consider changing the energy efficiency metrics for RCWs or CCWs to maintain consistency with any changes to the capacity metric or for other reasons. For example, the MEF_{J2} or IMEF metric could be modified to incorporate a capacity based on weight of clothing, as described previously in this document, which would result in an MEF_{J2} or IMEF expressed in terms of pounds of clothing per kWh per cycle.

Issue II.C.1. DOE requests feedback on whether to consider any changes to the energy efficiency metric defined in the test procedure, including the drivers for such a change and the form of a new metric.

2. Water Efficiency Metric

The current water efficiency standards for both RCWs and CCWs are based on the IWF metric, measured in gal/cycle/cu.ft, as calculated in section 4.2.13 of Appendix J2. IWF is calculated as the total weighted per-cycle water consumption (in gallons) for all wash cycles divided by the capacity of the clothes container (in cu.ft.). Unlike the IMEF metric, in which a higher number indicates more efficient performance, a lower IWF value indicates more efficient performance. DOE could consider inverting the existing calculation such that a higher value of IWF would represent more efficient performance, which would provide greater consistency with the IMEF metric.

Issue II.C.2. DOE requests feedback on whether to consider any changes to the water efficiency metric defined in the test procedure to maintain consistency with any changes to the capacity metric or for any other purpose, including those described for the energy efficiency metric, and whether it would be appropriate to invert the existing calculation such that a higher value of IWF would represent more efficient performance.

3. Annual Energy Calculation

The annual energy consumption of an RCW is calculated as part of the estimated annual operating cost calculations at 10 CFR 430.23(j)(1)(ii)(A)

and (B).[26] In each equation, annual energy consumption is calculated by multiplying the per-cycle energy consumption [27] by the representative average RCW use of 295 cycles per year. The annual operating cost is provided to the consumer on the Federal Trade Commission (''FTC'') EnergyGuide label for RCWs.

DOE could consider changes to the method for calculating annual energy use to ensure that the calculation results in a measurement of energy use during a representative average use cycle. DOE may also consider changes to the overall calculation methodology that could improve the usefulness of the information presented to the consumer on the product label.

An increasingly wide range of RCW capacities are available on the market, ranging from less than 1 cu.ft. to greater than 6 cu.ft. When DOE originally developed the annual energy calculation methodology at 10 CFR 430.23(j)(1)(i), the test procedure accommodated clothes washers with capacities up to 3.8 cu.ft.[28] According to the current calculation methodology, all RCWs are assumed to be used for 295 cycles per year, while the per-cycle energy reflects a weighted-average load size based on the clothes washer capacity. Therefore, the annual energy calculation reflects an annual volume of laundered clothing that scales with clothes washer capacity. The increasing range of RCW capacities available on the market may mean that the total amount of laundered clothing reflected in the annual energy calculation is no longer reflective of energy use during a representative average use cycle of RCWs of different sizes. For example, the current annual energy calculation methodology is based on an annual laundry volume of 2,258 pounds for a 3-cu.ft. RCW and 4,036 pounds for a 6-cu.ft. RCW.

This potential disparity is particularly notable when comparing the product labels of two RCW models with the same IMEF efficiency rating, but different capacities. Under the current annual energy calculation methodology, the information presented on the product label would indicate that the larger-capacity RCW would use significantly more annual energy than the smaller-capacity model; however, the larger RCW's label would be based on a significantly larger amount of annual laundry than the smaller model, as illustrated above. If compared on the basis of an equivalent volume of laundered clothing, both RCWs could be expected to use the same amount of annual energy since they have the same IMEF efficiency rating. This potential disparity may limit the ability of an individual consumer to use the information presented on the product label to compare the differences in expected energy use among RCW models with the same rated energy efficiency but different capacities.

Given the increasingly wide range of RCW capacities available on the market, and the significant changes over time in estimated annual RCW cycles, DOE may consider whether any changes are warranted for the annual energy and annual water calculations to ensure that the results continue to reflect representative average use for all clothes washer sizes, to harmonize with any changes to other metrics within the DOE test procedures, and to continue to provide useful comparative information to consumers. For example:

- Revising the annual energy and annual water calculation methodology from being based on a fixed number of annual cycles to a fixed number of annual pounds of clothing.
- Varying the annual number of wash cycles based on clothes washer capacity, rather than a fixed number of annual cycles for all clothes washers.

Issue II.C.3. DOE requests data and information regarding whether and how the annual number of wash cycles varies as a function of clothes washer capacity. DOE also requests feedback on whether DOE should consider any changes to the annual energy or annual water calculation methodology and the burden associated with these potential changes.

III. Other Comments, Data, and Information

In addition to the issues identified earlier in this document, DOE welcomes comment on any other aspect of the existing test procedures for clothes washers not already addressed by the specific areas identified in this document.

For example, as a general matter, DOE test procedures are intended to be performed to completion while a unit is installed in the test fixture. If a unit were to be uninstalled or removed from the test fixture before completion of the full test procedure, DOE would consider it a best practice to redo the complete test once the unit is reinstalled in the test fixture. Appendix J2 does not currently specify that the entire test procedure should be conducted without interruption, but DOE could consider adding such specification if doing so would lead to more repeatable and reproducible test results, particularly for the active mode portion of the test. DOE recognizes that given the differences in test conditions between active mode and inactive/off mode testing,[29] that these two portions of the test could be performed in separate test fixtures.

DOE recently issued an RFI to seek more information on whether its test procedures are reasonably designed, as required by EPCA, to produce results that measure the energy use or efficiency of a product during a representative average use cycle or period of use. 84 FR 9721 (Mar. 18, 2019). DOE seeks comment and information on this issue as it pertains to the test procedure for clothes washers along with comments and information on the following:

Issue III.1. DOE particularly seeks information regarding whether amended test procedures would more accurately or fully comply with the requirement that they be reasonably designed to produce test results that measure energy efficiency and water use of clothes washers during a representative average use cycle or period of use.

Issue III.2. DOE requests information that would ensure that the test procedure is not unduly burdensome to conduct. Specifically, DOE requests comments on whether potential amendments based on the issues discussed would result in a test procedure that is unduly burdensome to conduct, particularly in light of any new products on the market since the last test procedure update.

Issue III.3. DOE requests feedback on any potential amendments to the existing test procedures that could be considered to address impacts on manufacturers, including small businesses.

Issue III.4. DOE requests comment on the benefits and burdens of adopting any industry/voluntary consensus-based or other appropriate test procedure, without modification.

Issue III.5. DOE seeks information on how the test procedures could be amended to reduce the cost of new or additional features and make it more

[26] Part (A) provides the calculation when electrically heated water is used. Part (B) provides the calculation when gas-heated or oil-heated water is used.

[27] These equations include the machine electrical energy consumption, hot water energy consumption, and combined low-power mode energy consumption; they exclude the energy consumption for removal of moisture from the test load (*i.e.,* the ''drying energy'').

[28] The maximum capacity in the original load size table in Appendix J1–1997 was 3.8 cu.ft.

[29] Specifically, section 3.9 of appendix J2 specifies for combined low-power mode testing (*i.e.,* inactive/off mode testing) to establish the testing conditions set forth in sections 2.1 (electrical energy supply), 2.4 (test room temperature), and 2.10 (clothes washer installation); but does not require establishing the other test conditions in section 2 of appendix J2 (*e.g.,* supply water and water pressure).

likely that such features are included on clothes washers.

IV. Submission of Comments

DOE invites all interested parties to submit in writing by the date specified in the **DATES** section, comments and information on matters addressed in this document and on other matters relevant to DOE's consideration of test procedures for clothes washers. These comments and information will aid in the development of a test procedure NOPR for RCWs and CCWs if DOE determines that amended test procedures may be appropriate for these products.

Submitting comments via *http://www.regulations.gov.* The *http://www.regulations.gov* web page will require you to provide your name and contact information. Your contact information will be viewable to DOE Building Technologies staff only. Your contact information will not be publicly viewable except for your first and last names, organization name (if any), and submitter representative name (if any). If your comment is not processed properly because of technical difficulties, DOE will use this information to contact you. If DOE cannot read your comment due to technical difficulties and cannot contact you for clarification, DOE may not be able to consider your comment.

However, your contact information will be publicly viewable if you include it in the comment or in any documents attached to your comment. Any information that you do not want to be publicly viewable should not be included in your comment, nor in any document attached to your comment. Persons viewing comments will see only first and last names, organization names, correspondence containing comments, and any documents submitted with the comments.

Do not submit to *http://www.regulations.gov* information for which disclosure is restricted by statute, such as trade secrets and commercial or financial information (hereinafter referred to as Confidential Business Information (''CBI'')). Comments submitted through *http://www.regulations.gov* cannot be claimed as CBI. Comments received through the website will waive any CBI claims for the information submitted. For information on submitting CBI, see the Confidential Business Information section.

DOE processes submissions made through *http://www.regulations.gov* before posting. Normally, comments will be posted within a few days of being submitted. However, if large volumes of comments are being processed simultaneously, your comment may not be viewable for up to several weeks. Please keep the comment tracking number that *http://www.regulations.gov* provides after you have successfully uploaded your comment.

Submitting comments via email, hand delivery, or mail. Comments and documents submitted via email, hand delivery, or mail also will be posted to *http://www.regulations.gov.* If you do not want your personal contact information to be publicly viewable, do not include it in your comment or any accompanying documents. Instead, provide your contact information on a cover letter. Include your first and last names, email address, telephone number, and optional mailing address. The cover letter will not be publicly viewable as long as it does not include any comments.

Include contact information each time you submit comments, data, documents, and other information to DOE. If you submit via mail or hand delivery, please provide all items on a CD, if feasible. It is not necessary to submit printed copies. No facsimiles (faxes) will be accepted.

Comments, data, and other information submitted to DOE electronically should be provided in PDF (preferred), Microsoft Word or Excel, WordPerfect, or text (ASCII) file format. Provide documents that are not secured, written in English and free of any defects or viruses. Documents should not contain special characters or any form of encryption and, if possible, they should carry the electronic signature of the author.

Campaign form letters. Please submit campaign form letters by the originating organization in batches of between 50 to 500 form letters per PDF or as one form letter with a list of supporters' names compiled into one or more PDFs. This reduces comment processing and posting time.

Confidential Business Information. According to 10 CFR 1004.11, any person submitting information that he or she believes to be confidential and exempt by law from public disclosure should submit via email, postal mail, or hand delivery two well-marked copies: One copy of the document marked confidential including all the information believed to be confidential, and one copy of the document marked ''non-confidential'' with the information believed to be confidential deleted. Submit these documents via email to *ResClothesWasher2016TP0011@ee.doe.gov* or on a CD, if feasible. DOE will make its own determination about the confidential status of the information and treat it according to its determination.

It is DOE's policy that all comments may be included in the public docket, without change and as received, including any personal information provided in the comments (except information deemed to be exempt from public disclosure).

DOE considers public participation to be a very important part of the process for developing test procedures and energy conservation standards. DOE actively encourages the participation and interaction of the public during the comment period in each stage of this process. Interactions with and between members of the public provide a balanced discussion of the issues and assist DOE in the process.

Anyone who wishes to be added to the DOE mailing list to receive future notices and information about this process should contact Appliance and Equipment Standards Program staff at (202) 287–1445 or via e-*mail at ApplianceStandardsQuestions@ee.doe.gov.*

Signing Authority

This document of the Department of Energy was signed on February 25, 2020, by Alexander N. Fitzsimmons, Deputy Assistant Secretary for Energy Efficiency, Energy Efficiency and Renewable Energy, pursuant to delegated authority from the Secretary of Energy. That document with the original signature and date is maintained by DOE.

For administrative purposes only, and in compliance with requirements of the Office of the Federal Register, the undersigned DOE **Federal Register** Liaison Officer has been authorized to sign and submit the document in electronic format for publication, as an official document of the Department of Energy. This administrative process in no way alters the legal effect of this document upon publication in the **Federal Register**.

Signed in Washington, DC, on May 6, 2020.

Treena V. Garrett,

Federal Register Liaison Officer, U.S. Department of Energy.

[FR Doc. 2020–09990 Filed 5–21–20; 8:45 am]

BILLING CODE 6450–01–P

DEPARTMENT OF TRANSPORTATION

Federal Aviation Administration

14 CFR Part 39

[Docket No. FAA–2020–0456; Product Identifier 2020–NM–053–AD]

RIN 2120–AA64

Airworthiness Directives; Airbus SAS Airplanes

AGENCY: Federal Aviation Administration (FAA), DOT.

ACTION: Notice of proposed rulemaking (NPRM).

SUMMARY: The FAA proposes to adopt a new airworthiness directive (AD) for certain Airbus SAS Model A330–202, –203, –223, –243, –301, –321, –322, –323, –341, –342, and –343 airplanes; and Model A340–200 and –300 series airplanes. This proposed AD was prompted by a report indicating that the allowable load limits on the vertical tail plane could be reached and possibly exceeded in cases of multiple rudder doublet inputs. This proposed AD would require upgrading the flight control data concentrator (FCDC), associated flight control primary computer (FCPC), and flight warning computer (FWC), and activation of the stop rudder input aural warning (SRIW) device, as specified in a European Union Aviation Safety Agency (EASA) AD, which will be incorporated by reference. The FAA is proposing this AD to address the unsafe condition on these products.

DATES: The FAA must receive comments on this proposed AD by July 6, 2020.

ADDRESSES: You may send comments, using the procedures found in 14 CFR 11.43 and 11.45, by any of the following methods:

- *Federal eRulemaking Portal:* Go to *https://www.regulations.gov.* Follow the instructions for submitting comments.
- *Fax:* 202–493–2251.
- *Mail:* U.S. Department of Transportation, Docket Operations, M–30, West Building Ground Floor, Room W12–140, 1200 New Jersey Avenue SE, Washington, DC 20590.
- *Hand Delivery:* Deliver to Mail address above between 9 a.m. and 5 p.m., Monday through Friday, except Federal holidays.

For the material identified in this proposed AD that will be incorporated by reference (IBR), contact the EASA, Konrad-Adenauer-Ufer 3, 50668 Cologne, Germany; telephone +49 221 89990 1000; email *ADs@easa.europa.eu;* internet *www.easa.europa.eu.* You may find this IBR material on the EASA website at *https://ad.easa.europa.eu.* You may view this IBR material at the FAA, Airworthiness Products Section, Operational Safety Branch, 2200 South 216th St., Des Moines, WA. For information on the availability of this material at the FAA, call 206–231–3195. It is also available in the AD docket on the internet at *https://www.regulations.gov* by searching for and locating Docket No. FAA–2020–0456.

Examining the AD Docket

You may examine the AD docket on the internet at *https://www.regulations.gov* by searching for and locating Docket No. FAA–2020–0456; or in person at Docket Operations between 9 a.m. and 5 p.m., Monday through Friday, except Federal holidays. The AD docket contains this NPRM, any comments received, and other information. The street address for Docket Operations is listed above. Comments will be available in the AD docket shortly after receipt.

FOR FURTHER INFORMATION CONTACT: Vladimir Ulyanov, Aerospace Engineer, Large Aircraft Section, International Validation Branch, FAA, 2200 South 216th St., Des Moines, WA 98198; telephone and fax 206–231–3229; email *vladimir.ulyanov@faa.gov.*

SUPPLEMENTARY INFORMATION:

Comments Invited

The FAA invites you to send any written relevant data, views, or arguments about this proposal. Send your comments to an address listed under the **ADDRESSES** section. Include ''Docket No. FAA–2020–0456; Product Identifier 2020–NM–053–AD'' at the beginning of your comments. The FAA specifically invites comments on the overall regulatory, economic, environmental, and energy aspects of this NPRM. The FAA will consider all comments received by the closing date and may amend this NPRM based on those comments.

The FAA will post all comments the FAA receives, without change, to *https://www.regulations.gov,* including any personal information you provide. The FAA will also post a report summarizing each substantive verbal contact the FAA receives about this NPRM.

Discussion

The EASA, which is the Technical Agent for the Member States of the European Union, has issued EASA AD 2020–0077, dated March 31, 2020 (''EASA AD 2020–0077'') (also referred to as the Mandatory Continuing Airworthiness Information, or ''the MCAI''), to correct an unsafe condition for certain Airbus SAS Model A330–202, –203, –223, –243, –301, –321, –322, –323, –341, –342, and –343 airplanes; and Model A340–211, –212, –213, –311, –312, and –313 airplanes.

This proposed AD was prompted by a report indicating that the allowable load limits on the vertical tail plane could be reached and possibly exceeded in cases of multiple rudder doublet inputs. The FAA is proposing this AD to address cases of multiple rudder doublet inputs, which could lead to excessive loads on the vertical tail plane and a subsequent loss of control of the airplane. See the MCAI for additional background information.

Related IBR Material Under 1 CFR Part 51

EASA AD 2020–0077 describes procedures for upgrading the FCDC, associated FCPC, and FWC, and activation of the SRIW device. This material is reasonably available because the interested parties have access to it through their normal course of business or by the means identified in the **ADDRESSES** section.

FAA's Determination and Requirements of This Proposed AD

This product has been approved by the aviation authority of another country, and is approved for operation in the United States. Pursuant to the FAA's bilateral agreement with the State of Design Authority, the FAA has been notified of the unsafe condition described in the MCAI referenced above. The FAA is proposing this AD because the FAA evaluated all the relevant information and determined the unsafe condition described previously is likely to exist or develop in other products of the same type design.

Proposed AD Requirements

This proposed AD would require accomplishing the actions specified in EASA AD 2020–0077 described previously, as incorporated by reference, except for any differences identified as exceptions in the regulatory text of this AD.

Explanation of Required Compliance Information

In the FAA's ongoing efforts to improve the efficiency of the AD process, the FAA initially worked with Airbus and EASA to develop a process to use certain EASA ADs as the primary source of information for compliance with requirements for corresponding FAA ADs. The FAA has since coordinated with other manufacturers

and civil aviation authorities (CAAs) to use this process. As a result, EASA AD 2020–0077 will be incorporated by reference in the FAA final rule. This proposed AD would, therefore, require compliance with EASA AD 2020–0077 in its entirety, through that incorporation, except for any differences identified as exceptions in the regulatory text of this proposed AD. Using common terms that are the same as the heading of a particular section in the EASA AD does not mean that operators need comply only with that section. For example, where the AD requirement refers to ''all required actions and compliance times,'' compliance with this AD requirement is not limited to the section titled ''Required Action(s) and Compliance Time(s)'' in the EASA AD. Service information specified in EASA AD 2020–0077 that is required for compliance with EASA AD 2020–0077 will be available on the internet at *https://www.regulations.gov* by searching for and locating Docket No. FAA–2020–0456 after the FAA final rule is published.

Costs of Compliance

The FAA estimates that this proposed AD affects 10 airplanes of U.S. registry. The FAA estimates the following costs to comply with this proposed AD:

ESTIMATED COSTS FOR REQUIRED ACTIONS

Labor cost	Parts cost	Cost per product	Cost on U.S. operators
Up to 10 work-hours × $85 per hour = $850	Up to $31,038	Up to $31,888	Up to $318,880.

Authority for This Rulemaking

Title 49 of the United States Code specifies the FAA's authority to issue rules on aviation safety. Subtitle I, section 106, describes the authority of the FAA Administrator. Subtitle VII: Aviation Programs, describes in more detail the scope of the Agency's authority.

The FAA is issuing this rulemaking under the authority described in Subtitle VII, Part A, Subpart III, Section 44701: ''General requirements.'' Under that section, Congress charges the FAA with promoting safe flight of civil aircraft in air commerce by prescribing regulations for practices, methods, and procedures the Administrator finds necessary for safety in air commerce. This regulation is within the scope of that authority because it addresses an unsafe condition that is likely to exist or develop on products identified in this rulemaking action.

Regulatory Findings

The FAA determined that this proposed AD would not have federalism implications under Executive Order 13132. This proposed AD would not have a substantial direct effect on the States, on the relationship between the national Government and the States, or on the distribution of power and responsibilities among the various levels of government.

For the reasons discussed above, I certify this proposed regulation:

(1) Is not a ''significant regulatory action'' under Executive Order 12866,

(2) Will not affect intrastate aviation in Alaska, and

(3) Will not have a significant economic impact, positive or negative, on a substantial number of small entities under the criteria of the Regulatory Flexibility Act.

List of Subjects in 14 CFR Part 39

Air transportation, Aircraft, Aviation safety, Incorporation by reference, Safety.

The Proposed Amendment

Accordingly, under the authority delegated to me by the Administrator, the FAA proposes to amend 14 CFR part 39 as follows:

PART 39—AIRWORTHINESS DIRECTIVES

■ 1. The authority citation for part 39 continues to read as follows:

Authority: 49 U.S.C. 106(g), 40113, 44701.

§ 39.13 [Amended]

■ 2. The FAA amends § 39.13 by adding the following new airworthiness directive (AD):

Airbus SAS: Docket No. FAA–2020–0456; Product Identifier 2020–NM–053–AD.

(a) Comments Due Date

The FAA must receive comments by July 6, 2020.

(b) Affected ADs

None.

(c) Applicability

This AD applies to Airbus SAS airplanes identified in paragraphs (c)(1) through (4) of this AD, certificated in any category, as identified in European Union Aviation Safety Agency (EASA) AD 2020–0077, dated March 31, 2020 (''EASA AD 2020–0077'').

(1) Model A330–202, –203, –223, and –243 airplanes.

(2) Model A330–301, –321, –322, –323, –341, –342, and –343 airplanes.

(3) Model A340–211, –212, and –213 airplanes.

(4) Model A340–311, –312, and –313 airplanes.

(d) Subject

Air Transport Association (ATA) of America Code 27, Flight Controls.

(e) Reason

This AD was prompted by a report indicating that the allowable load limits on the vertical tail plane could be reached and possibly exceeded in cases of multiple rudder doublet inputs. The FAA is issuing this AD to address cases of multiple rudder doublet inputs, which could lead to excessive loads on the vertical tail plane and a subsequent loss of control of the airplane.

(f) Compliance

Comply with this AD within the compliance times specified, unless already done.

(g) Requirements

Except as specified in paragraph (h) of this AD: Comply with all required actions and compliance times specified in, and in accordance with, EASA AD 2020–0077.

(h) Exceptions to EASA AD 2020–0077

(1) Where EASA AD 2020–0077 refers to its effective date, this AD requires using the effective date of this AD.

(2) The ''Remarks'' section of EASA AD 2020–0077 does not apply to this AD.

(i) Other FAA AD Provisions

The following provisions also apply to this AD:

(1) *Alternative Methods of Compliance (AMOCs):* The Manager, Large Aircraft Section, International Validation Branch, FAA, has the authority to approve AMOCs for this AD, if requested using the procedures found in 14 CFR 39.19. In accordance with 14 CFR 39.19, send your request to your principal inspector or local Flight Standards District Office, as appropriate. If sending information directly to the Large Aircraft Section, International Validation Branch, send it to the attention of the person identified in paragraph (j)(2) of this AD. Information may be emailed to: *9-ANM-116-AMOC-REQUESTS@faa.gov.* Before using any approved AMOC, notify your appropriate principal inspector, or lacking a principal inspector, the manager of the local flight standards district office/certificate holding district office.

(2) *Contacting the Manufacturer:* For any requirement in this AD to obtain instructions

from a manufacturer, the instructions must be accomplished using a method approved by the Manager, Large Aircraft Section, International Validation Branch, FAA; or EASA; or Airbus SAS's EASA Design Organization Approval (DOA). If approved by the DOA, the approval must include the DOA-authorized signature.

(3) *Required for Compliance (RC):* For any service information referenced in EASA AD 2020–0077 that contains RC procedures and tests: Except as required by paragraph (i)(2) of this AD, RC procedures and tests must be done to comply with this AD; any procedures or tests that are not identified as RC are recommended. Those procedures and tests that are not identified as RC may be deviated from using accepted methods in accordance with the operator's maintenance or inspection program without obtaining approval of an AMOC, provided the procedures and tests identified as RC can be done and the airplane can be put back in an airworthy condition. Any substitutions or changes to procedures or tests identified as RC require approval of an AMOC.

(j) Related Information

(1) For information about EASA AD 2020–0077, contact the EASA, Konrad-Adenauer-Ufer 3, 50668 Cologne, Germany; telephone +49 221 89990 6017; email *ADs@easa.europa.eu;* Internet *www.easa.europa.eu.* You may find this EASA AD on the EASA website at *https://ad.easa.europa.eu.* You may view this material at the FAA, Airworthiness Products Section, Operational Safety Branch, 2200 South 216th St., Des Moines, WA. For information on the availability of this material at the FAA, call 206–231–3195. This material may be found in the AD docket on the internet at *https://www.regulations.gov* by searching for and locating Docket No. FAA–2020–0456.

(2) For more information about this AD, contact Vladimir Ulyanov, Aerospace Engineer, Large Aircraft Section, International Validation Branch, FAA, 2200 South 216th St., Des Moines, WA 98198; telephone and fax 206–231–3229; email *vladimir.ulyanov@faa.gov.*

Issued on May 15, 2020.

Lance T. Gant,

Director, Compliance & Airworthiness Division, Aircraft Certification Service.

[FR Doc. 2020–10978 Filed 5–21–20; 8:45 am]

BILLING CODE 4910–13–P

FEDERAL TRADE COMMISSION

16 CFR Part 318

Health Breach Notification

AGENCY: Federal Trade Commission.

ACTION: Regulatory review; request for public comment.

SUMMARY: The Federal Trade Commission (''FTC'' or ''Commission'') requests public comment on its Health Breach Notification Rule (the ''HBN Rule'' or the ''Rule''). The Commission is soliciting comment as part of the FTC's systematic review of all current Commission regulations and guides.

DATES: Written comments must be received on or before August 20, 2020.

ADDRESSES: Interested parties may file a comment online or on paper by following the Request for Comment part of the **SUPPLEMENTARY INFORMATION** section below. Write ''Health Breach Notification Rule, 16 CFR part 318, Project No. P205405,'' on your comment and file your comment online at *https://www.regulations.gov* by following the instructions on the web-based form. If you prefer to file your comment on paper, mail your comment to the following address: Federal Trade Commission, Office of the Secretary, 600 Pennsylvania Avenue NW, Suite CC–5610 (Annex B), Washington, DC 20580, or deliver your comment to the following address: Federal Trade Commission, Office of the Secretary, Constitution Center, 400 7th Street SW, 5th Floor, Suite 5610 (Annex B), Washington, DC 20024.

FOR FURTHER INFORMATION CONTACT: Elisa Jillson (202–326–3001), Division of Privacy and Identity Protection, Bureau of Consumer Protection, Federal Trade Commission, 600 Pennsylvania Avenue NW, Washington, DC 20580.

SUPPLEMENTARY INFORMATION:

I. Background

The Commission typically reviews its rules every ten years to ensure that the rules have kept up with changes in the marketplace, technology, and business models.[1] The Commission issued the HBN Rule in 2009, and companies were subject to enforcement beginning in 2010. The Commission now requests comment on the HBN Rule, including the costs and benefits of the Rule, and whether particular sections should be retained, eliminated, or modified. All interested persons are hereby given notice of the opportunity to submit written data, views, and arguments concerning the Rule.

The HBN Rule, issued pursuant to section 13407 of the American Recovery and Reinvestment Act of 2009 (''Recovery Act'' or ''the Act''),[2] became effective on August 25, 2009,[3] and companies were subject to FTC enforcement beginning on February 22, 2010. Section 13407 of the Recovery Act created certain protections for ''personal health records'' or ''PHRs,'' electronic records of identifiable health information that can be drawn from multiple sources and that are managed, shared, and controlled by or primarily for the individual. Specifically, the Recovery Act recognized that vendors of personal health records and PHR related entities (*i.e.,* companies that offer products and services through PHR websites or access information in or send information to PHRs) were collecting consumers' health information but were not subject to the privacy and security requirements of the Health Insurance Portability and Accountability Act (''HIPAA'').[4] The Recovery Act directed the FTC to issue a rule requiring these entities, and their third-party service providers, to provide notification of any breach of unsecured individually identifiable health information. Accordingly, the HBN Rule requires vendors of PHRs and PHR related entities to provide: (1) Notice to consumers whose unsecured individually identifiable health information has been breached; (2) notice to the media, in many cases; and (3) notice to the Commission. The Rule also requires third party service providers (*i.e.,* those companies that provide services such as billing or data storage) to vendors of PHRs and PHR related entities to provide notification to such vendors and entities following the discovery of a breach.

The Rule requires notice ''without unreasonable delay and in no case later than 60 calendar days'' after discovery of a data breach. If the breach affects 500 or more individuals, notice to the FTC must be provided ''as soon as possible and in no case later than ten business days'' after discovery of the breach. The FTC makes available a standard form for companies to use to notify the Commission of a breach.[5] The FTC posts a list of breaches involving 500 or more individuals on its website.[6] This list only includes two breaches, because the Commission has predominantly received notices about breaches affecting fewer than 500 individuals.

Importantly, the Rule does not apply to health information secured through technologies specified by the Department of Health and Human Services (''HHS'') and it does not apply to businesses or organizations covered by HIPAA. HIPAA-covered entities and

[1] See current ten-year schedule for review of FTC rules and guides at 85 FR 20889 (Apr. 15, 2020).

[2] Public Law 111–5, 123 Stat. 115 (2009).

[3] 74 FR 42962 (Aug. 25, 2009).

[4] Health Insurance Portability & Accountability Act, Public Law 104–191, 110 Stat. 1936 (1996).

[5] Notice of Breach of Health Information, *https://www.ftc.gov/system/files/documents/plain-language/2017_5_2_breach_notification_form.pdf.*

[6] Breach Notices Received by the FTC, *https://www.ftc.gov/system/files/documents/plain-language/draft_breach_notices_received_by_ftc_2015.pdf.*

their ''business associates'' must instead comply with HHS's breach notification rule.[7] The FTC has not had occasion to enforce its Rule because, as the PHR market has developed over the past decade, most PHR vendors, related entities, and service providers have been HIPAA-covered entities or ''business associates'' subject to HHS's rule.[8] However, as consumers turn towards direct-to-consumer technologies for health information and services (such as mobile health applications, virtual assistants, and platforms' health tools), more companies may be covered by the FTC's Rule.

II. Rule Review

The Commission periodically reviews all of its rules and guides. These reviews seek information about the costs and benefits of the Commission's rules and guides and their regulatory and economic impact. The information obtained assists the Commission in identifying those rules and guides that warrant modification. Therefore, the Commission solicits comments on, among other things, the economic impact and benefits of the Rule; possible conflict between the Rule and state, local, or other federal laws or regulations; and the effect on the Rule of any technological, economic, or other industry changes.

III. Questions Regarding the HBN Rule

The Commission invites members of the public to comment on any issues or concerns they believe are relevant or appropriate to the Commission's review of the HBN Rule, and to submit written data, views, facts, and arguments addressing the Rule. All comments should be filed as prescribed in the **ADDRESSES** section of this document, and must be received by August 20, 2020. If your comment proposes any modifications to the Rule, please also address whether your proposed modification may conflict with the statutory provisions of the Recovery Act and, if so, whether you propose seeking legislative changes to the Recovery Act. The Commission is particularly interested in comments addressing the following questions:

A. General Issues

1. Is there a continuing need for specific provisions of the Rule? Why or why not?

2. What benefits has the Rule provided to consumers? What evidence supports the asserted benefits?

3. What modifications, if any, should be made to the Rule to increase the benefits to consumers?

a. What evidence supports the proposed modifications?

b. How would these modifications affect the costs the Rule imposes on businesses, including small businesses?

4. What significant costs, if any, has the Rule imposed on consumers? What evidence supports the asserted costs?

5. What modifications, if any, should be made to the Rule to reduce any costs imposed on consumers?

a. What evidence supports the proposed modifications?

b. How would these modifications affect the benefits provided by the Rule?

6. What benefits, if any, has the Rule provided to businesses, including small businesses? What evidence supports the asserted benefits?

7. What modifications, if any, should be made to the Rule to increase its benefits to businesses, including small businesses?

a. What evidence supports the proposed modifications?

b. How would these modifications affect the costs the Rule imposes on businesses, including small businesses?

c. How would these modifications affect the benefits to consumers?

8. What significant costs, if any, including costs of compliance, has the Rule imposed on businesses, including small businesses? What evidence supports the asserted costs?

9. What modifications, if any, should be made to the Rule to reduce the costs imposed on businesses, including small businesses?

a. What evidence supports the proposed modifications?

b. How would these modifications affect the benefits the Rule provides to consumers?

10. What evidence is available concerning the degree of industry compliance with the Rule?

11. What modifications, if any, should be made to the Rule to account for changes in relevant technology, economic conditions, or laws? For example, as the healthcare industry adopts standardized application programming interfaces (''APIs'') to help individuals to access their electronic health information with smartphones and other mobile devices (as required by rules implementing the 21st Century Cures Act[9]), will the number of entities subject to the Commission's HBN Rule increase?

a. What evidence supports the proposed modifications?

12. Are there modifications or changes the Commission should make to the Rule to address any developments in health care products or services related to COVID–19?

13. Does the Rule overlap or conflict with other federal, state, or local laws or regulations? If so, how?

a. What evidence supports the asserted conflicts?

b. With reference to the asserted conflicts, should the Rule be modified? If so, why, and how? If not, why not?

B. Specific Issues

1. What evidence exists that the Rule has resulted in under-notification, over-notification, or an efficient level of notification?

2. Section 318.1 provides that the Rule does not apply to HIPAA-covered entities or to any other entity to the extent that it engages in activities as a business associate of a HIPAA-covered entity. Has this limitation helped to harmonize the Commission's HBN Rule with HHS's rule? Why or why not?

3. Do the definitions set forth in § 318.2 of the Rule accomplish the Recovery Act's goal of advancing the use of health information technology while strengthening the privacy and security protections for health information?

4. Are the definitions in § 318.2 clear and appropriate? If not, how can they be improved, consistent with the Act's requirements?

5. Should the definition of ''PHR identifiable health information'' in § 318.2(d) be modified in light of technological advances in methods of de-identification and re-identification? If so, how, consistent with the Act's requirements?

6. Should the definitions of ''PHR related entity'' in § 318.2(f), ''Third party service provider'' in § 318.2(h), or ''Vendor of personal health records'' in Section 318.2(j) be modified in light of changing technological and economic conditions, such as the proliferation of mobile health applications (''apps''), virtual assistants offering health services, and platforms' health tools? If so, how, consistent with the Act's requirements?

7. Section 318.4 sets out the timing requirements for notification. Are these requirements clear and appropriate? If not, how can they be improved, consistent with the Act's requirements?

8. Section 318.5 sets out the requirements for the method of notice of a breach. Are these requirements clear

[7] HIPAA Breach Notification Rule, 45 CFR 164.400–414, available at *https://www.hhs.gov/hipaa/for-professionals/breach-notification/index.html.*

[8] *Id.*

[9] 45 CFR parts 170 and 171.

and appropriate? Do technological changes, such as the increased use of in-app messaging, text messages, and platform messaging, warrant any changes to this section, consistent with the Act's requirements?

9. Section 318.6 sets out the requirements for the content of notice of a breach. Are these requirements clear and appropriate? If not, how can they be improved, consistent with the Act's requirements?

10. What are the implications (if any) for enforcement of the Rule raised by direct-to-consumer technologies and services such as mobile health apps, virtual assistants, and platforms' health tools?

IV. Instructions for Submitting Comments

You can file a comment online or on paper. For the Commission to consider your comment, we must receive it on or before August 20, 2020. Please write ''Health Breach Notification Rule, 16 CFR part 318, Project No. P205405'' on the comment. Because of the public health emergency in response to the COVID–19 outbreak and the agency's heightened security screening, postal mail addressed to the Commission will be subject to delay. We strongly encourage you to submit your comment online through the *https://www.regulations.gov* website. To ensure the Commission considers your online comment, please follow the instructions on the web-based form provided by *regulations.gov.* Your comment, including your name and your state, will be placed on the public record of this proceeding, including the *https://www.regulations.gov* website.

If you file your comment on paper, please write ''Health Breach Notification Rule, 16 CFR part 318, Project No. P205405'' on your comment and on the envelope, and mail your comment to the following address: Federal Trade Commission, Office of the Secretary, 600 Pennsylvania Avenue NW, Suite CC–5610 (Annex B), Washington, DC 20580, or deliver your comment to the following address: Federal Trade Commission, Office of the Secretary, Constitution Center, 400 7th Street SW, 5th Floor, Suite 5610 (Annex B), Washington, DC 20024.

Because your comment will be placed on the public record, you are solely responsible for making sure that your comment does not include any sensitive or confidential information. In particular, your comment should not include any sensitive personal information, such as your or anyone else's Social Security number; date of birth; driver's license number or other state identification number, or foreign country equivalent; passport number; financial account number; or credit or debit card number. You are also solely responsible for making sure that your comment does not include any sensitive health information, such as medical records or other individually identifiable health information. In addition, your comment should not include any ''trade secret or any commercial or financial information which . . . . is privileged or confidential''—as provided by section 6(f) of the FTC Act, 15 U.S.C. 46(f), and FTC Rule 4.10(a)(2), 16 CFR 4.10(a)(2)—including in particular competitively sensitive information such as costs, sales statistics, inventories, formulas, patterns, devices, manufacturing processes, or customer names.

Comments containing material for which confidential treatment is requested must be filed in paper form, must be clearly labeled ''Confidential,'' and must comply with FTC Rule 4.9(c). In particular, the written request for confidential treatment that accompanies the comment must include the factual and legal basis for the request, and must identify the specific portions of the comment to be withheld from the public record. Your comment will be kept confidential only if the General Counsel grants your request in accordance with the law and the public interest. Once your comment has been posted publicly at *www.regulations.gov,* we cannot redact or remove your comment unless you submit a confidentiality request that meets the requirements for such treatment under FTC Rule 4.9(c), and the General Counsel grants that request.

Visit the Commission website at *https://www.ftc.gov* to read this document and the news release describing it. The FTC Act and other laws that the Commission administers permit the collection of public comments to consider and use in this proceeding as appropriate. The Commission will consider all timely and responsive public comments that it receives on or before August 20, 2020. For information on the Commission's privacy policy, including routine uses permitted by the Privacy Act, see *https://www.ftc.gov/site-information/privacy-policy.*

By direction of the Commission.

April J. Tabor,

Acting Secretary.

[FR Doc. 2020–10263 Filed 5–21–20; 8:45 am]

BILLING CODE 6750–01–P

EXECUTIVE OFFICE OF THE PRESIDENT

Office of National Drug Control Policy

21 CFR Part 1401

RIN 3201–AA01

Freedom of Information Act

AGENCY: Office of National Drug Control Policy.

ACTION: Proposed rule.

SUMMARY: The Office of National Drug Control Policy (ONDCP) is updating its Freedom of Information Act (FOIA) implementing regulation to comport with the FOIA Improvement Act of 2016 and best practices. The proposed rule describes how to make a FOIA request with ONDCP and how the Office of General Counsel, which includes the ONDCP officials authorized to evaluate FOIA requests, processes requests for records. The proposed rule also states ONDCP's Privacy Act Policies and Procedures. The proposed rule describes how individuals can find out if an ONDCP system of records contains information about them and, if so, how to access or amend a record. ONDCP seeks comments on all aspects of the proposed rule and will thoroughly consider all comments that are submitted on time.

DATES: Send comments on or before June 30, 2020.

ADDRESSES: You may send comments, identified by RIN number 3201–AA01 and/or docket number ONDCP–2020–002, by any of the following methods:

- *Federal eRulemaking Portal: http://www.regulations.gov.* Follow the instructions for submitting comments.
- *Email: OGC@ondcp.eop.gov.* Include docket number ONDCP–2020–002 and/or RIN number 3201–AA01 in the subject line of the message.
- *Mail:* Executive Office of the President, Office of National Drug Control Policy, 1800 G Street NW, 9th Floor, Washington, DC 20006.

Instructions: All submissions received must include the agency name and docket number or Regulatory Information Number (RIN) for this rulemaking. All comments received will be posted without change to *http://www.regulations.gov* including any personal information provided.

ONDCP strongly recommends using electronic means for submitting comments. Due to COVID–19, comments submitted through conventional mail delivery services may not be received in a timely manner.

FOR FURTHER INFORMATION CONTACT: Questions concerning this notice should

be directed to Michael J. Passante, Acting General Counsel, Office of General Counsel, Office of National Drug Control Policy, Executive Office of the President, at (202) 395–6622 or *OGC@ondcp.eop.gov.*

SUPPLEMENTARY INFORMATION:

I. Background

ONDCP has undertaken a review of agency practices related to the collection, use, protection and disclosure of ONDCP records and information in light of the FOIA Improvement Act of 2016 and the Privacy Act. As a result of that review, ONDCP is updating its regulation on FOIA and the Privacy Act. The FOIA, 5 U.S.C. 552 *et seq.,* provides a right of access to certain records and information Federal agencies maintain and control. The FOIA requires each Federal agency to publish regulations describing how to submit a FOIA request and how people responsible for FOIA will process these requests. ONDCP's current FOIA regulation, codified at 21 CFR part 1401, was last revised in 1999. *See* 64 FR 69901 (Dec. 15, 1999). Due to the passage of time and amendments to the FOIA, we are updating the regulation. ONDCP's proposed regulation on FOIA and the Privacy Act incorporates the practical experience of the agency's staff who handle FOIA and privacy issues and guidance from the Office of Management and Budget and the U.S. Department of Justice, Office of Information Policy. It also strives for consistency with FOIA and Privacy Act regulations among other agencies of the Executive Office of the President.

II. Section-by-Section Analysis

Subpart A—Freedom of Information Act Policies and Procedures

Section 1401.1—Purpose: This section describes the purpose of the regulation, which is to implement the FOIA.

Section 1401.2—ONDCP: Organization and functions: This section describes the mission and leadership structure of the agency. It specifies where media inquiries may be submitted and notes that oral requests for information under FOIA will be rejected.

Section 1401.3—Definitions: This section defines the key terms used in the regulation.

Section 1401.4—Access to information: This section describes the types of information that ONDCP will make available under FOIA.

Section 1401.5—Proactive disclosures: This section describes information about ONDCP the public can access without filing a FOIA request. Pursuant to the FOIA Improvement Act of 2016, ONDCP will make records available that have been requested three or more times in an electronic format.

Section 1401.6—Records requiring consultation. This section describes how ONDCP will process records that originated with another agency but are in the custody of ONDCP.

Section 1401.7—How to request records—Form and content: This section explains what an individual must do to submit a valid FOIA request to ONDCP and where a request should be sent. It also describes the information requesters must provide so ONDCP can identify the records sought and process their requests.

Section 1401.8—Initial determination: This section provides that the ONDCP General Counsel has the authority to approve or deny FOIA requests and describes how to appeal FOIA decisions made by the General Counsel.

Section 1401.9—Response—form and content: This section explains that ONDCP will respond to your request in writing either with the requested records or an explanation of the reasons why all or portions of the requested records were not disclosed. We also will provide information about the right of appeal and the mediation services offered by the Office of Government Information Services of the National Archives and Records Administration. The response will include any fees associated with the FOIA request.

Section 1401.10—Expedited Process: This section describes the circumstances under which expedited processing of a FOIA request may be granted.

Section 1401.11—Prompt response: This section describes the period of time within which ONDCP will determine whether it is appropriate to grant or deny a FOIA request, *i.e.,* ordinarily within twenty working days after the date the request is received. If ONDCP determines that a request is denied or that additional time is required to process the request, it will provide written notification to the requestor with an explanation of the reasons for denial or delay.

Section 1401.12—Extension of Time: This section describes and defines the ''unusual circumstances'' under which ONDCP may extend the time limit for making a determination on a FOIA request.

Section 1401.13—Appeal procedures: This section describes when and how a requester may appeal a determination on a FOIA request and how and within what period of time ONDCP will make a determination on an appeal.

Section 1401.14—Fees to be charged—general: This section describes the general FOIA processing activities performed by ONDCP personnel and the rates charged by ONDCP to recoup the employee costs associated with responding to FOIA requests.

Section 1401.15—Fees to be charged—Miscellaneous provisions: This section contains miscellaneous FOIA fee provisions such as where payment should be sent, when advance payment is required, and rates of interest charged on late payments, etc.

Section 1401.16—Fees to be charged—Categories of Requester: This section describes the different categories of requesters and the types and amounts of fees ONDCP may assess to process and respond to a FOIA request.

Section 1401.17—Restrictions on charging fees. This provision describes the circumstances under which ONDCP is restricted in charging fees normally associated with processing FOIA request such as when ONDCP does not meet time limits mandated by the FOIA.

Section 1401.18—Waiver or Reduction of Fees: This section describes the factors that ONDCP may consider when deciding whether to waive or reduce the fees associated with processing FOIA requests.

Section 1401.19—Aggregation of requests: This section describes the circumstances under which ONDCP may aggregate a series or group of requests for purposes of fee assessment.

Section 1401.20—Deletion of exempted information: This section provides that ONDCP will redact exempt information from its FOIA disclosures to the extent that exempt information can be segregated from other information subject to disclosure.

Section 1401.21—Confidential commercial information: This section explains when and how a person or entity that submits information to ONDCP must identify confidential commercial information. It also describes how ONDCP staff will handle such information.

Subpart B—Privacy Act Policies and Procedures

Section 1401.22—Definitions: This section defines the key terms used in this Subpart.

Section 1401.23—Purpose and scope: This section describes the purpose of the regulation, which is to implement the Privacy Act, and explains general policies and procedures for individuals requesting access to records, requesting amendments or corrections to records,

and requesting an accounting of disclosures of records.

Section 1401.24—How do I make a Privacy Act request?: This section explains what an individual must do to submit a request to ONDCP for access to records, to amend or correct records, or for an accounting of disclosures of records. It also describes the information an individual must provide so ONDCP can identify the records sought and determine whether the request can be granted.

Section 1401.25—How will ONDCP respond to a Privacy Act request?: This section describes the period of time within which ONDCP will respond to requests. It also explains that ONDCP will grant or deny requests in writing, provide reasons if a request is denied in whole or in part, and explain the right of appeal.

Section 1401.26—What can I do if I am dissatisfied with ONDCP's response to my Privacy Act request?: This section describes when and how an individual may appeal a determination on a Privacy Act request and how and within time period ONDCP will make a determination on an appeal.

Section 1401.27—What does it cost to get records under the Privacy Act?: This section explains that requesters are required to pay fees for the duplication of requested records.

III. Regulatory Flexibility Act

ONDCP has considered the impact of the proposed rule and determined that if adopted as a final rule it is not likely to have a significant economic impact on a substantial number of small business entities because it only applies to ONDCP's internal operations and legal obligations. *See* 5 U.S.C. 601 *et seq.*

IV. Paperwork Reduction Act

The proposed rule does not contain any information collection requirement that requires approval from the Office of Management and Budget under the Paperwork Reduction Act, 44 U.S.C. 3501 *et seq.*

List of Subjects in CFR 21 Part 1401

Freedom of information, Privacy.

■ For the reasons stated in the preamble, the Office of National Drug Control Policy is proposing to revise part 1401 of title 21 of the Code of Federal Regulations to read as follows:

PART 1401—PUBLIC AVAILABILITY OF INFORMATION

Subpart A—Freedom of Information Act Policies and Procedures

Sec.

1401.1 Purpose.
1401.2 The Office of National Drug Control Policy—organization and functions.
1401.3 Definitions.
1401.4 Access to information.
1401.5 Proactive disclosures.
1401.6 Records requiring consultation.
1401.7 How to request records—form and content.
1401.8 Initial determination.
1401.9 Responses-form and content.
1401.10 Expedited process.
1401.11 Prompt response.
1401.12 Extension of time.
1401.13 Appeal procedures.
1401.14 Fees to be charged—general.
1401.15 Fees to be charged—miscellaneous provisions.
1401.16 Fees to be charged—categories of requesters.
1401.17 Restrictions on charging fees.
1401.18 Waiver or reduction of fees
1401.19 Aggregation of requests.
1401.20 Deletion of exempted information.
1401.21 Confidential commercial information.

Subpart B—Privacy Act Policies and Procedures

1401.22 Definitions.
1401.23 Purpose and scope.
1401.24 How do I make a Privacy Act request?
1401.25 How will ONDCP respond to my Privacy Act request?
1401.26 What can I do if I am dissatisfied with ONDCP's response to my Privacy Act request?
1401.27 What does it cost to get records under the Privacy Act?

Authority: 5 U.S.C. 552.

Subpart A—Freedom of Information Act Policies and Procedures

§ 1401.1 Purpose.

The purpose of this part is to prescribe rules, guidelines and procedures to implement the Freedom of Information Act (FOIA), as amended, 5 U.S.C. 552.

§ 1401.2 The Office of National Drug Control Policy—organization and functions.

(a) The Office of National Drug Control Policy (ONDCP) was created by the Anti-Drug Abuse Act of 1988, 21 U.S.C. 1501 *et seq.,* and reauthorized under 21 U.S.C. 1701 *et seq.* and several appropriations acts. The mission of ONDCP is to coordinate the anti-drug efforts of the various agencies and departments of the Federal Government, to consult with States and localities and assist their anti-drug efforts, and to annually promulgate the National Drug Control Strategy. ONDCP is headed by the Director of National Drug Control Policy.

(b) ONDCP's Office of External and Legislative Affairs is responsible for providing information to the press and to the general public. If members of the public have general questions about ONDCP, they may email the Office of External and Legislative Affairs at *mediainquiries@ondcp.eop.gov.* This email address should not be used to make FOIA requests. All oral requests for information under FOIA will be rejected.

§ 1401.3 Definitions.

For the purpose of this part, all the terms defined in the Freedom of Information Act apply.

Commercial-use request means a request from or on behalf of one who seeks information for a cause or purpose that furthers the commercial, trade or profit interests of the requester or the person or institution on whose behalf the request is made. In determining whether a requester properly belongs in this category, ONDCP will consider the intended use of the information.

Direct costs means the expense actually expended to search, review, or duplicate in response to a FOIA request. For example, direct costs include 116% of the salary of the employee performing work (*i.e.,* the basic rate of pay for the employee plus 16 percent of that rate to cover benefits) and the actual costs incurred while operating equipment.

Duplicate means the process of making a copy of a document. Such copies may take the form of paper, microform, audio-visual materials, or machine-readable documentation. Requesters may specify the preferred form or format (including electronic formats) for the records they seek. ONDCP will try to accommodate formatting requests if the record is readily reproducible in that form or format.

Educational institution means preschool, a public or private elementary or secondary school, an institution of undergraduate higher education, an institution of graduate higher education, an institution of professional education, or an institution of vocational education that operates a program or programs of scholarly research.

Noncommercial scientific institution means an institution that is not operated on a commercial basis as that term is defined in this section, and that is operated solely for the purpose of conducting scientific research the results of which are not intended to promote any particular product or industry.

OGIS means the Office of Government Information Services of the National Archives and Records Administration. OGIS offers FOIA dispute resolution services, which is a voluntary process. If ONDCP agrees to participate in the

dispute resolution services provided by OGIS, ONDCP will actively engage as a partner to the process in an attempt to resolve the dispute.

Records and any other terms used in this part in reference to information includes any information that would be an agency record subject to the requirements of this part when maintained in any format, including electronic format.

Representative of the news media is any person or entity that gathers information of potential interest to a segment of the public, uses its editorial skills to turn the raw materials into distinct work, and distributes that work to an audience. The term ''news'' means information that is about current events or information that would be of interest to the public. Examples of the news media include television or radio stations that broadcast to the public at large and publishers of news periodicals that make their products available to the general public for purchase or subscription. Freelance journalists may be regarded as working for the news media where they demonstrate a reasonable basis for expecting publication through that organization, even though not actually employed by it.

Request means a letter or other written communication seeking records or information under FOIA.

Review means the process of examining documents that are located during a search to determine if any portion should lawfully be withheld. It is the processing of determining disclosability.

Search means to review, manually or by automated means, agency records for the purpose of locating those records responsive to a request.

§ 1401.4 Access to information.

The Office of National Drug Control Policy makes available information pertaining to matters issued, adopted, or promulgated by ONDCP, that are within the scope of 5 U.S.C. 552(a)(2). Such information is located at *https://www.whitehouse.gov/ondcp.*

§ 1401.5 Proactive disclosures.

ONDCP will make records that the FOIA requires us to make available for public inspection and copying in an electronic format (with appropriate exemptions applied), through our website: *http://www.whitehouse.gov/ondcp.* These records consist of information that has been requested three or more times or that has been released to a requester and that ONDCP determines has become, or are likely to become, the subject of subsequent requests for substantially the same records.

§ 1401.6 Records requiring consultation.

Requests for records that are in ONDCP's custody but in which other agencies have equities shall be reviewed by ONDCP and then ONDCP will either consult with or refer the records to the other agency or agencies for further processing.

§ 1401.7 How to request records—form and content.

(a) You must describe the records you seek in sufficient detail and in writing to enable ONDCP personnel to locate them with a reasonable amount of effort. To satisfy this requirement, you should be as detailed as possible when describing the records you seek. To the extent possible, each request must reasonably describe the record(s) sought including the type of document, specific event or action, title or name, author, recipient, subject matter of the record, date or time period, location, and all other pertinent data. Before or after submitting their requests, requesters may contact ONDCP's FOIA Public Liaison to discuss the records they seek and for assistance in describing the records. A list of Agency FOIA Public Liaisons is available at *https://www.foia.gov/#agency-search* (b)(1) If you are making a request for records about yourself, you must comply with the verification of identity provision set forth in § 1401.24(f) of this part.

(2) If a request for records pertains to a third party, you may receive greater access by submitting either a notarized authorization signed by that individual or an unsworn declaration under 26 U.S.C. 1746 by that individual authorizing disclosure of the records to you. If the other individual is deceased, you should submit proof of death such as a copy of the death certificate or an obituary. As an exercise of administrative discretion, ONDCP may require you to provide additional information if necessary in order to verify that a particular individual has consented to disclosure.

(c) Whenever it is appropriate to do so, ONDCP automatically processes a Privacy Act request for access to records under both the Privacy Act and the FOIA, following the rules contained in this part. ONDCP processes a request under both the FOIA and Privacy Act so you will receive the maximum amount of information available to you by law.

(d) Requests must be received by ONDCP through methods specified on the FOIA page of ONDCP's website: *https://www.whitehouse.gov/ondcp/about/foia-and-legal/.* Requests may be emailed to *FOIA@ondcp.eop.gov.*

(e) The words ''FOIA REQUEST'' or ''REQUEST FOR RECORDS'' must be clearly marked on all FOIA request communications. The time limitations imposed by § 1401.10 will not begin until the Office of General Counsel identifies a communication as a FOIA request.

(f) You must provide contact information, such as your phone number, email address and mailing address, so we will be able to communicate with you about your request and provide released records. If we cannot contact you, or you do not respond within twenty calendar days to our request for clarification, we will close your request.

(g) To protect our computer systems, we will not open attachments to emailed requests—you must include your request within the body of the email. We will not process email attachments.

§ 1401.8 Initial determination.

The General Counsel or his or her designee shall have the authority to approve or deny requests received pursuant to these regulations.

§ 1401.9 Responses–form and content.

(a) When a requested record has been identified and is available, the General Counsel or his or her designee shall send the record to the person making the request or notify the person making the request as to where and when the record will be available. The notification shall also advise the person making the request of any fees assessed under § 1401.10 of this part. ONDCP will inform the requester of the availability of its FOIA Public Liaison.

(b) A denial or partial denial of a request for a record shall be in writing signed by the General Counsel or his or her designee and shall include:

(1) The name and title of the person making the determination;

(2) Either a reference to the specific exemption under FOIA authorizing the withholding of the record or a statement that, after diligent effort, the requested records have not been found.

(3) An estimate of the volume of any records or information withheld, such as the number of pages or some other reasonable form of estimation, although such an estimate is not required if the volume is otherwise indicated by deletions marked on records that are disclosed in part or if providing an estimate would harm an interest protected by an applicable exemption. *See* 5 U.S.C. 552(a)(6)(F).

(4) A statement that the denial may be appealed to the Director or his/her designee within 90 days of the date of the response. The requirements for making an appeal are specified in § 1401.13.

(5) A statement notifying the requester of the assistance available from the ONDCP's FOIA Public Liaison and the dispute resolution services offered by OGIS.

§ 1401.10 Expedited process.

(a) A request for expedited processing may be made at any time. ONDCP must process requests and appeals on an expedited basis whenever it is determined that they involve:

(1) The lack of expedited treatment could reasonably be expected to pose an imminent threat to the life or physical safety of an individual; or

(2) An urgency to inform the public about an actual or alleged Federal Government activity, beyond the public's right to know about government activity generally, and the request is made by a person primarily engaged in disseminating information.

(b) A requester who seeks expedited processing must submit a statement, certified to be true and correct, explaining in detail the basis for requesting expedited processing. For example, under paragraph (a)(2) of this section, a requester who is not a full-time member of the news media must establish that the requester is a person whose primary professional activity or occupation is information dissemination, though it need not be the requester's sole occupation. Such a requester also must establish a particular urgency to inform the public about the government activity involved in the request, beyond the public's right to know about government activity generally. The existence of numerous articles published on a given subject can be helpful in establishing the requirement that there be an ''urgency to inform'' the public on the topic. The formality of certification may be waived as a matter of administrative discretion.

(c) Within ten days of receipt of a request for expedited processing, ONDCP will decide whether to grant it and will notify the requester of the decision. If a request for expedited treatment is granted, the request will be given priority and will be processed as soon as practicable. If a request for expedited processing is denied, any appeal of that decision will be acted on expeditiously.

§ 1401.11 Prompt response.

(a) The General Counsel, or designee, will determine within 20 days (excepting Saturdays, Sundays, and legal public holidays) after the receipt of a FOIA request whether it is appropriate to grant the request and will provide written notification to the person making the request. If the request is denied, the written notification will include the names of the individuals who participated in the determination, the reasons for the denial, and that an appeal may be filed with the Office of National Drug Control Policy under § 1401.13.

(b) When additional time is required, the General Counsel or his or her designee shall acknowledge receipt of the request within the 20 working day period and shall assign the request an individualized tracking number. The acknowledgment will include the tracking number and a brief explanation of the reason(s) for delay. Where the extension exceeds 10 working days, ONDCP must provide the requester with an opportunity to modify the request or arrange an alternative time period for processing the original or modified request. ONDCP will make available its designated FOIA contact or its FOIA Public Liaison for this purpose, and will alert requesters to the availability of the OGIS to provide dispute resolution services.

§ 1401.12 Extension of time.

(a) In unusual circumstances, the Office of General Counsel may extend the time limit prescribed in § 1401.7 or § 1401.9 by written notice to the FOIA requester. The notice will state the reasons for the extension.

(b) The phrase ''unusual circumstances'' means:

(1) The requested records are located in establishments that are separated from the office processing the request;

(2) A voluminous amount of separate and distinct records are demanded in a single request; or

(3) Another agency or two or more components in the same agency have substantial interest in the determination of the request.

(c) Whenever ONDCP cannot meet the statutory time limit for processing a request because of ''unusual circumstances,'' as defined by 5 U.S.C. 552(a)(b)(B), and ONDCP extends the time limit on that basis, the agency must, before expiration of the 20-day period to respond, notify the requester in writing of the unusual circumstances involved and of the date by which ONDCP estimates processing of the request will be completed. Where the extension exceeds 10 working days, ONDCP must, as described by the FOIA, provide the requester with an opportunity to modify the request or arrange an alternative time period for processing the original or modified request. The agency must make available its designated FOIA contact or its FOIA Public Liaison for this purpose. The agency must also alert requesters to the availability of the Office of Government Information Services (OGIS) to provide dispute resolution services.

(d) To satisfy unusual circumstances under the FOIA, ONDCP may aggregate requests in cases where it reasonably appears that multiple requests, submitted either by a requester or by a group of requesters acting in concert, constitute a single request that would otherwise involve unusual circumstances. ONDCP cannot aggregate multiple requests that involve unrelated matters.

§ 1401.13 Appeal procedures.

(a) An appeal to the ONDCP must explain in writing the legal and factual basis for the appeal. It must be received by email at *FOIA@ondcp.eop.gov* or another method specified on the FOIA page of ONDCP's website within 90 days of the date of the response. The appeal must be in writing, addressed to the Director, Executive Office of the President, Office of National Drug Control Policy, 1800 G Street NW, 9th Floor, Washington, DC 20006, ATTN: Office of General Counsel. The communication should clearly be labeled as a ''Freedom of Information Act Appeal.''

(b) The Director or designee will decide the appeal within 20 days (excepting Saturdays, Sundays, and legal public holidays). If the Director or designee deny an appeal in whole or in part, the written determination will contain the reason for the denial, the names of the individuals who participated in the determination, and the provisions for judicial review of the denial and ruling on appeal provided in 5 U.S.C. 552(a)(4). The denial will also inform the requestor of the dispute resolution services offered by OGIS as a non-exclusive alternate to litigation. If ONDCP agrees to participate in voluntary dispute resolution services provided by OGIS, it will actively engage in an attempt to resolve the dispute.

§ 1401.14 Fees to be charged—general.

ONDCP will assess a fee to process FOIA requests in accordance with the provisions of this section and OMB Guidelines. We shall ensure that searches, review and duplication are conducted in the most efficient and the least expensive manner. ONDCP will ordinarily collect all applicable fees

before sending copies of records to a requester. ONDCP will charge the following fees unless a waiver or reduction of fees is granted under § 1401.18, or the total fee to be charged is less than $25.00. We will notify you if we estimate that charges will exceed $25 including a breakdown of the fees for search, review or duplication and whether applicable entitlements to duplication and search at no charge have been provided. We will not process your request until you either commit in writing to pay the actual or estimated total fee, or designate some amount of fees you are willing to pay.

(a) *Manual search for records.* ONDCP will charge $77.00 per hour, which is a blended hourly rate for all personnel that respond to FOIA requests, plus 16 percent of that rate to cover benefits.

(b) *Computerized search for records.* ONDCP will charge $77.00 per hour, which is a blended hourly rate for all personnel that respond to FOIA requests, plus 16 percent of that rate to cover benefits.

(c) *Review of records.* ONDCP will charge $77.00 per hour, which is a blended hourly rate for all personnel that responded to FOIA requests, plus 16 percent of that rate to cover benefits. Records or portions of records withheld under an exemption subsequently determined not to apply may be reviewed to determine the applicability of exemptions not considered. The cost for a subsequent review is assessable.

(d) *Duplication of records.* We will charge duplication fees to all requesters. We will honor your preference for receiving a record in a particular format if we can readily reproduce it in the form or format requested. If we provide photocopies, we will make one copy per request at the cost of $.10 per page. For copies of records produced on tapes, disks or other media, we will charge the direct costs of producing the copy, including operator time. Where we must scan paper documents in order to comply with your preference to receive the records in an electronic format, we will charge you the direct costs associated with scanning those materials. For other forms of duplication, we will charge the direct costs. We will provide the first 100 pages of duplication (or the cost equivalent for other media) without charge except for requesters seeking records for a commercial use.

(e) *Other charges.* ONDCP will recover the costs of providing other services such as certifying records or sending records by special methods.

§ 1401.15 Fees to be charged—miscellaneous provisions.

(a) Payment for FOIA services may be made through the methods specified on the FOIA page of ONDCP's website.

(b) ONDCP may require advance payment where the estimated fee exceeds $250, or a requester previously failed to pay within 30 days of the billing date.

(c) ONDCP may assess interest charges beginning the 31st day of billing. Interest will be at the rate prescribed in section 3717 of title 31 of the United States Code and will accrue from the date of the billing.

(d) ONDCP may assess search charges where records are not located or where records are exempt from disclosure.

(e) ONDCP may aggregate individual requests and charge accordingly for requests seeking portions of a document or documents.

§ 1401.16 Fees to be charged—categories of requesters.

(a) There are four categories of FOIA requesters: Commercial use requesters; educational and non-commercial scientific institutions; representatives of the news media; and all other requesters.

(b) The specific levels of fees for each of these categories are:

(1) *Commercial use requesters.* ONDCP will recover the full direct cost of providing search, review and duplication services. Commercial use requesters will not receive free search-time or free reproduction of documents.

(2) *Educational and non-commercial scientific institution requesters.* ONDCP will charge the cost of reproduction, excluding charges for the first 100 pages. Requesters must demonstrate the request is authorized by and under the auspices of a qualifying institution and that the records are sought for scholarly or scientific research not a commercial use.

(3) *Requesters who are representatives of the news media.* ONDCP will charge the cost of reproduction, excluding charges for the first 100 pages. Requesters must meet the criteria in § 1401.3(h), and the request must not be made for a commercial use. A request that supports the news dissemination function of the requester shall not be considered a commercial use.

(4) *All other requesters.* ONDCP will recover the full direct cost of the search and the reproduction of records, excluding the first 100 pages of reproduction and the first two hours of search time.

§ 1401.17 Restrictions on charging fees.

(a) No search fees will be charged for requests by educational institutions (unless the records are sought for a commercial use), noncommercial scientific institutions, or representatives of the news media.

(b) If ONDCP fails to comply with the FOIA's time limits in which to respond to a request, it may not charge search fees, or, in the instances of requests from requesters described in § 1401.16(b)(2), may not charge duplication fees, except as described in paragraphs (c), (d), and (e) of this section.

(c) If ONDCP determines that unusual circumstances as defined by the FOIA apply and the agency provided timely written notice to the requester in accordance with the FOIA, a failure to comply with the time limit shall be excused for an additional 10 days.

(d) If ONDCP determines that unusual circumstances as defined by the FOIA apply, and more than 5,000 pages are necessary to respond to the request, the agency may charge search fees, or, in the case of requesters described in § 1401.16(b)(2) of this section, may charge duplication fees if the following steps are taken. ONDCP must have provided timely written notice of unusual circumstances to the requester in accordance with the FOIA and the agency must have discussed with the requester via written mail, email, or telephone (or made not less than three good-faith attempts to do so) how the requester could effectively limit the scope of the request in accordance with 5 U.S.C. 552(a)(6)(B)(ii). If this exception is satisfied, ONDCP may charge all applicable fees incurred in the processing of the request.

(e) If a court has determined that exceptional circumstances exist as defined by the FOIA, a failure to comply with the time limits shall be excused for the length of time provided by the court order.

(f) No search or review fees will be charged for a quarter-hour period unless more than half of that period is required for search or review.

(g) When, after first deducting the 100 free pages (or its cost equivalent) and the first two hours of search, a total fee calculated under paragraph (c) of this section is $25.00 or less for any request, no fee will be charged.

§ 1401.18 Waiver or reduction of fees.

Requirements for waiver or reduction of fees:

(a) Requesters may seek a waiver of fees by submitting a written application demonstrating how disclosure of the requested information is in the public interest because it is likely to contribute significantly to public understanding of the operations or activities of the

government and is not primarily in the commercial interest of the requester.

(b) ONDCP must furnish records responsive to a request without charge or at a reduced rate when it determines, based on all available information, that disclosure of the requested information is in the public interest because it is likely to contribute significantly to public understanding of the operations or activities of the government and is not primarily in the commercial interest of the requester. In deciding whether this standard is satisfied the agency must consider the factors described in paragraphs (b)(1) through (3) of this section:

(1) Disclosure of the requested information would shed light on the operations or activities of the government. The subject of the request must concern identifiable operations or activities of the Federal Government with a connection that is direct and clear, not remote or attenuated.

(2) Disclosure of the requested information would be likely to contribute significantly to public understanding of those operations or activities. This factor is satisfied when the following criteria are met:

(i) Disclosure of the requested records must be meaningfully informative about government operations or activities. The disclosure of information that already is in the public domain, in either the same or a substantially identical form, would not be meaningfully informative if nothing new would be added to the public's understanding.

(ii) The disclosure must contribute to the understanding of a reasonably broad audience of persons interested in the subject, as opposed to the individual understanding of the requester. A requester's expertise in the subject area as well as the requester's ability and intention to effectively convey information to the public must be considered. Components will presume that a representative of the news media will satisfy this consideration.

(3) The disclosure must not be primarily in the commercial interest of the requester. To determine whether disclosure of the requested information is primarily in the commercial interest of the requester, components will consider the following criteria:

(i) Components must identify whether the requester has any commercial interest that would be furthered by the requested disclosure. A commercial interest includes any commercial, trade, or profit interest. Requesters must be given an opportunity to provide explanatory information regarding this consideration.

(ii) If there is an identified commercial interest, the component must determine whether that is the primary interest furthered by the request. A waiver or reduction of fees is justified when the requirements of § 1401.17(b)(1) and (2) are satisfied and any commercial interest is not the primary interest furthered by the request. Components ordinarily will presume that when a news media requester has satisfied the requirements of § 1401.17(b)(1) and (2), the request is not primarily in the commercial interest of the requester. Disclosure to data brokers or others who merely compile and market government information for direct economic return will not be presumed to primarily serve the public interest.

(c) Where only some of the records to be released satisfy the requirements for a waiver of fees, a waiver shall be granted for those records.

(d) Requests for a waiver or reduction of fees should be made when the request is first submitted to ONDCP and should address the criteria referenced above. A requester may submit a fee waiver request at a later time so long as the underlying record request is pending or on administrative appeal. When a requester who has committed to pay fees subsequently asks for a waiver of those fees and that waiver is denied, the requester shall be required to pay any costs incurred up to the date the fee waiver request was received.

§ 1401.19 Aggregation of requests.

When an agency reasonably believes that a requester or a group of requesters acting in concert is attempting to divide a single request into a series of requests for the purpose of avoiding fees, the agency may aggregate those requests and charge accordingly. Agencies may presume that multiple requests of this type made within a 30-day period have been made in order to avoid fees. For requests separated by a longer period, agencies will aggregate them only where there is a reasonable basis for determining that aggregation is warranted in view of all the circumstances involved. Multiple requests involving unrelated matters cannot be aggregated.

§ 1401.20 Deletion of exempted information.

When requested records contain matters that are exempted under 5 U.S.C. 552(b), but such exempted matters can be reasonably segregated from the remainder of the records, the records shall be disclosed by ONDCP with the necessary redactions. If records are disclosed in part, ONDCP will mark them to show the amount and location of information redacted and the exemption(s) under which the redactions were made unless doing so would harm an interest protected by an applicable exemption.

§ 1401.21 Confidential commercial information.

(a) *Definitions*—

Confidential commercial information means commercial or financial information obtained by ONDCP from a submitter that may be protected from disclosure under Exemption 4 of the FOIA, 5 U.S.C. 552(b)(4).

Submitter means any person or entity, including a corporation, State, or foreign government, but not including another Federal Government entity, that provides confidential commercial information, either directly or indirectly to the Federal Government.

(b) *Designation of confidential commercial information.* A submitter of confidential commercial information must use good faith efforts to designate by appropriate markings, at the time of submission, any portion of its submission that it considers to be protected from disclosure under Exemption 4. These designations expire 10 years after the date of the submission unless the submitter requests and provides justification for a longer designation period.

(c) *When notice to submitters is required.* (1) ONDCP must promptly provide written notice to the submitter of confidential commercial information whenever records containing such information are requested under the FOIA if ONDCP determines that it may be required to disclose the records, provided:

(i) The requested information has been designated in good faith by the submitter as information considered protected from disclosure under Exemption 4; or

(ii) ONDCP has a reason to believe that the requested information may be protected from disclosure under Exemption 4, but has not yet determined whether the information is protected from disclosure.

(2) The notice must either describe the commercial information requested or include a copy of the requested records or portions of records containing the information. In cases involving a voluminous number of submitters, ONDCP may post or publish a notice in a place or manner reasonably likely to inform the submitters of the proposed disclosure, instead of sending individual notifications.

(d) *Exceptions to submitter notice requirements.* The notice requirements of this section do not apply if:

(1) ONDCP determines that the information is exempt under the FOIA, and therefore will not be disclosed;

(2) The information has been lawfully published or has been officially made available to the public;

(3) Disclosure of the information is required by a statute other than the FOIA or by a regulation issued in accordance with the requirements of Executive Order 12600 of June 23, 1987; or

(4) The designation made by the submitter under paragraph (b) of this section appears obviously frivolous. In such case, ONDCP must give the submitter written notice of any final decision to disclose the information within a reasonable number of days prior to a specified disclosure date.

(e) *Opportunity to object to disclosure.* (1) ONDCP must specify a reasonable time period within which the submitter must respond to the notice referenced above.

(2) If a submitter has any objections to disclosure, it should provide ONDCP a detailed written statement that specifies all grounds for withholding the particular information under any exemption of the FOIA. In order to rely on Exemption 4 as the basis for nondisclosure, the submitter must explain why the information constitutes a trade secret or commercial or financial information that is confidential.

(3) A submitter who fails to respond within the time period specified in the notice will be considered to have no objection to disclosure of the information. ONDCP is not required to consider any information received after the date of any disclosure decision. Any information provided by a submitter under this subpart may itself be subject to disclosure under the FOIA.

(f) *Analysis of objections.* ONDCP must consider a submitter's objections and specific grounds for nondisclosure in deciding whether to disclose the requested information.

(g) *Notice of intent to disclose.* Whenever ONDCP decides to disclose information over the objection of a submitter, ONDCP must provide the submitter written notice, which must include:

(1) A statement of the reasons why each of the submitter's disclosure objections was not sustained;

(2) A description of the information to be disclosed or copies of the records as ONDCP intends to release them; and

(3) A specified disclosure date, which must be a reasonable time after the notice.

(h) *Notice of FOIA lawsuit.* Whenever a requester files a lawsuit seeking to compel the disclosure of confidential commercial information, ONDCP must promptly notify the submitter.

(i) *Requester notification.* ONDCP must notify the requester whenever it provides the submitter with notice and an opportunity to object to disclosure; whenever it notifies the submitter of its intent to disclose the requested information; and whenever a submitter files a lawsuit to prevent the disclosure of the information.

(j) *No right or benefit.* The requirements of this section such as notification do not create any right or benefit, substantive or procedural, enforceable at law or in equity by a party against the United States, its agencies, its officers, or any person.

Subpart B—Privacy Act Policies and Procedures

§ 1401.22 Definitions.

For purposes of this subpart:

Access means making a record available to a subject individual.

Amendment means any correction, addition to or deletion of information in a record.

Individual means a natural person who either is a citizen of the United States or an alien lawfully admitted to the United States for permanent residence.

Maintain includes the term ''maintain'', collect, use, or disseminate.

Privacy Act Office means the ONDCP officials who are authorized to respond to requests and to process requests for amendment of records ONDCP maintains under the Privacy Act.

Record means any item, collection or grouping of information about an individual that ONDCP maintains within a system of records and contains the individual's name or the identifying number, symbol or other identifying particular assigned to the individual, such as a finger or voice print or photograph.

System of records means a group of records ONDCP maintains or controls from which information is retrieved by the name of an individual or by some identifying number, symbol or other identifying particular assigned to the individual.

§ 1401.23 Purpose and scope.

This subpart implements the Privacy Act, 5 U.S.C. 552a, a Federal law that requires Federal agencies to protect private information about individuals that the agencies collect or maintain. It establishes ONDCP's rules for access to records in systems of records we maintain that are retrieved by an individual's name or another personal identifier. It describes the procedures by which individuals may request access to records, request amendment or correction of those records, and request an accounting of disclosures of those records by ONDCP. Whenever it is appropriate to do so, ONDCP automatically processes a Privacy Act request for access to records under both the Privacy Act and the FOIA, following the rules contained in this part. ONDCP processes a request under both the Privacy Act and the FOIA so you will receive the maximum amount of information available to you by law.

§ 1401.24 How do I make a Privacy Act request?

(a) *In general.* You can make a Privacy Act request for records about yourself. You also can make a request on behalf of another individual as the parent or legal guardian of a minor, or as the legal guardian of someone determined by a court to be incompetent.

(b) *How do I make a request?*—(1) *Where do I send my written request?* To make a request for access to a record, you should write directly to our Office of General Counsel. Heightened security delays mail delivery. To avoid mail delivery delays, we strongly suggest that you email your request to *foia@ondcp.eop.gov.* Our mailing address is: Executive Office of the President, Office of National Drug Control Policy, 1800 G Street NW, 9th Floor, Washington, DC 20006, Attn: Office of General Counsel. To make sure that the Office of General Counsel receives your request without delay, you should include the notation ''Privacy Act Request'' in the subject line of your email or on the front of your envelope and also at the beginning of your request.

(2) *Security concerns.* To protect our computer systems, we will not open attachments to emailed requests—you must include your request within the body of the email. We will not process email attachments.

(c) *What should my request include?* You must describe the record that you seek in enough detail to enable the Office of General Counsel to locate the system of records containing the record with a reasonable amount of effort. Include specific information about each record sought, such as the time period in which you believe it was compiled, the name or identifying number of each system of records in which you believe it is kept, and the date, title or name, author, recipient, or subject matter of the record. As a general rule, the more specific you are about the record that you seek, the more likely we will be

able to locate it in response to your request.

(d) *How do I request amendment of a record?* If you are requesting an amendment of an ONDCP record, you must identify each particular record in question and the system of records in which the record is located, describe the amendment that you seek, and state why you believe that the record is not accurate, relevant, timely or complete. You may submit any documentation that you think would be helpful, including an annotated copy of the record.

(e) *How do I request an accounting of record disclosures?* If you are requesting an accounting of disclosures made by ONDCP to another person, organization or Federal agency, you must identify each system of records in question. An accounting generally includes the date, nature and purpose of each disclosure, as well as the name and address of the person, organization, or Federal agency to which the disclosure was made.

(f) *Verification of identity.* When making a Privacy Act request, you must verify your identity in accordance with these procedures to protect your privacy or the privacy of the individual on whose behalf you are acting. If you make a Privacy Act request and you do not follow these identity verification procedures, ONDCP cannot process your request.

(1) *How do I verify my own identity?* You must include in your request your full name, citizenship status, current address, and date and place of birth. We may request additional information to verify your identity. To verify your own identity, you must provide an unsworn declaration under 28 U.S.C. 1746, a law that permits statements to be made under penalty of perjury. To fulfill this requirement, you must include the following statement just before the signature on your request:

I declare under penalty of perjury that the foregoing is true and correct. Executed on [date].

(2) *How do I verify parentage or guardianship?* If you make a request as the parent or legal guardian of a minor, or as the legal guardian of someone determined by a court to be incompetent, for access to records or information about that individual, you must establish:

(i) The identity of the individual who is the subject of the record, by stating the individual's name, citizenship status, current address, and date and place of birth;

(ii) Your own identity, as required in paragraph (f)(1) of this section;

(iii) That you are the parent or legal guardian of the individual, which you may prove by providing a copy of the individual's birth certificate showing your parentage or a court order establishing your guardianship; and

(iv) That you are acting on behalf of the individual in making the request.

§ 1401.25 How will ONDCP respond to my Privacy Act request?

(a) *When will we respond to your request?* We will search to determine if the requested records exist in a system of records ONDCP owns or controls. The Office of General Counsel will respond to you in writing within twenty days after we receive your request and/or within ten working days after we receive your request for an amendment, if it meets the requirements of this subpart. We may extend the response time in unusual circumstances, such as the need to consult with another agency about a record or to retrieve a record that is in storage.

(b) *What will our response include?* (1) Our written response will include our determination whether to grant or deny your request in whole or in part, a brief explanation of the reasons for the determination, and the amount of the fee charged, if any, under § 1401.27. If you requested access to records, we will make the records, if any, available to you. If you requested amendment of a record, the response will describe any amendments made and advise you of your right to obtain a copy of the amended record.

(2) We will also notify the individual who is subject to the record in writing, if, based on your request, any system of records contains a record pertaining to him or her.

(3) If the Office of General Counsel makes an adverse determination with respect to your request, our written response will identify the name and address of the person responsible for the adverse determination, that the adverse determination is not a final agency action, and describe the procedures by which you may appeal the adverse determination under § 1401.26.

An adverse determination is a response to a Privacy Act request that:

(i) Withholds any requested record in whole or in part;

(ii) Denies a request to amend a record in whole or in part;

(iii) Declines to provide an accounting of disclosures;

(iv) Advises that a requested record does not exist or cannot be located;

(v) Finds that what you requested is not a record subject to the Privacy Act; or

(vi) Advises on any disputed fee matter.

§ 1401.26 What can I do if I am dissatisfied with ONDCP's response to my Privacy Act request?

(a) *What can I appeal?* You can appeal any adverse determination in writing to our Director or designee within ninety calendar days after the date of our response. We provide a list of adverse determinations in § 1401.25(b)(3).

(b) *How do I make an appeal?*—(1) *What should I include?* You may appeal by submitting a written statement giving the reasons why you believe the Director or designee should overturn the adverse determination. Your written appeal may include as much or as little related information as you wish to provide, as long as it clearly identifies the determination (including the request number, if known) that you are appealing.

(2) *Where do I send my appeal?* You should mark both your letter and the envelope, or the subject of your email, ''Privacy Act Appeal.'' To avoid mail delivery delays caused by heightened security, we strongly suggest that you email any appeal to *foia@ondcp.eop.gov.* Our mailing address is: Executive Office of the President, Office of National Drug Control Policy, 1800 G Street NW, 9th Floor, Washington, DC 20006, Attn: Office of General Counsel.

(c) *Who will decide your appeal?* (1) The Director or designee will act on all appeals under this section.

(2) We ordinarily will not adjudicate an appeal if the request becomes a matter of litigation.

(3) On receipt of any appeal involving classified information, the Director or designee must take appropriate action to ensure compliance with applicable classification rules.

(d) *When will we respond to your appeal?* The Director or designee will notify you of its appeal decision in writing within thirty days from the date it receives an appeal that meets the requirements of paragraph (b) of this section. We may extend the response time in unusual circumstances, such as the need to consult with another agency about a record or to retrieve a record shipped offsite for storage.

(e) *What will our response include?* The written response will include the Director or designee's determination whether to grant or deny your appeal in whole or in part, a brief explanation of the reasons for the determination, and information about the Privacy Act provisions for court review of the determination.

(1) *Appeals concerning access to records.* If your appeal concerns a request for access to records and the appeal is granted in whole or in part, we

will make the records, if any, available to you.

(2) *Appeals concerning amendments.* If your appeal concerns amendment of a record, the response will describe any amendment made and advise you of your right to obtain a copy of the amended record. We will notify all persons, organizations or Federal agencies to which we previously disclosed the record, if an accounting of that disclosure was made, that the record has been amended. Whenever the record is subsequently disclosed, the record will be disclosed as amended. If our response denies your request for an amendment to a record, we will advise you of your right to file a statement of disagreement under paragraph (f) of this section.

(f) *Statements of disagreement*—(1) *What is a statement of disagreement?* A statement of disagreement is a concise written statement in which you clearly identify each part of any record that you dispute and explain your reason(s) for disagreeing with our denial in whole or in part of your appeal requesting amendment.

(2) *How do I file a statement of disagreement?* You should mark both your letter and the envelope, or the subject of your email, ''Privacy Act Statement of Disagreement.'' To avoid mail delivery delays caused by heightened security, we strongly suggest that you email a statement of disagreement to *foia@ondcp.eop.gov.* Our mailing address is: Executive Office of the President, Office of National Drug Control Policy, 1800 G Street NW, 9th Floor, Washington, DC 20006, Attn: Office of General Counsel.

(3) *What will we do with your statement of disagreement?* We shall clearly note any portion of the record that is disputed and provide copies of the statement and, if we deem appropriate, copies of our statement that denied your request for an appeal for amendment, to persons or other agencies to whom the disputed record has been disclosed.

(g) *When appeal is required.* Under this section, you generally first must submit a timely administrative appeal, before seeking review of an adverse determination or denial request by a court.

§ 1401.27 What does it cost to get records under the Privacy Act?

(a) *Agreement to pay fees.* Your request is an agreement to pay fees. We consider your Privacy Act request as your agreement to pay all applicable fees unless you specify a limit on the amount of fees you agree to pay. We will not exceed the specified limit without your written agreement.

(b) *How do we calculate fees?* We will charge a fee for duplication of a record under the Privacy Act in the same way we charge for duplication of records under the FOIA in § 1401.14(d). There are no fees to search for or review records requested under the Privacy Act.

Michael J. Passante,

Acting General Counsel.

[FR Doc. 2020–09826 Filed 5–20–20; 8:45 am]

BILLING CODE 3280–F5–P

DEPARTMENT OF THE TREASURY

Internal Revenue Service

26 CFR Part 1

[REG–124327–19]

RIN 1545–BP56

Rehabilitation Credit Allocated Over a 5-Year Period

AGENCY: Internal Revenue Service (IRS), Treasury.

ACTION: Notice of proposed rulemaking.

SUMMARY: This document contains proposed regulations concerning the rehabilitation credit, including rules to coordinate the new 5-year period over which the credit may be claimed with other special rules for investment credit property. These proposed regulations affect taxpayers that claim the rehabilitation credit.

DATES: Written or electronic comments and requests for a public hearing must be received by July 21, 2020. Requests for a public hearing must be submitted as prescribed in the ''Comments and Requests for a Public Hearing'' section.

ADDRESSES: Commenters are strongly encouraged to submit public comments electronically. Submit electronic submissions via the Federal eRulemaking Portal at *www.regulations.gov* (indicate IRS and REG–124327–19) by following the online instructions for submitting comments. Once submitted to the Federal eRulemaking Portal, comments cannot be edited or withdrawn. The IRS expects to have limited personnel available to process public comments that are submitted on paper through mail. Until further notice, any comments submitted on paper will be considered to the extent practicable. The Department of the Treasury (Treasury Department) and the IRS will publish for public availability any comment submitted electronically, and to the extent practicable on paper, to its public docket. Send paper submissions to: CC:PA:LPD:PR (REG–124327–19), Room 5203, Internal Revenue Service, P.O. Box 7604, Ben Franklin Station, Washington, DC 20044.

FOR FURTHER INFORMATION CONTACT: Concerning the proposed regulations, call Barbara J. Campbell, (202) 317–4137; concerning submissions of comments and requests for a public hearing, call Regina Johnson, (202) 317–5177 (not toll-free numbers).

SUPPLEMENTARY INFORMATION:

Background

This document contains proposed amendments to Title 26 part 1 under section 47 of the Internal Revenue Code (Code). The rehabilitation credit under section 47 is listed as an investment credit under section 46, and the investment credit under section 46 is a current year general business credit under section 38. On December 22, 2017, section 47 was amended by section 13402 of Public Law 115–97, 131 Stat. 2054 (2017), commonly referred to as the Tax Cuts and Jobs Act (TCJA).

Prior to the TCJA, former section 47(a) provided a two-tier credit for qualified rehabilitation expenditures (QREs) incurred in connection with the rehabilitation of a qualified rehabilitated building (QRB). Former section 47(a)(2) allowed a 20-percent credit for QREs with respect to a certified historic structure, and former section 47(a)(1) allowed a 10-percent credit for QREs with respect to a QRB other than a certified historic structure (for certain buildings first placed in service before 1936 (pre-1936 buildings)). Under former section 47, both the 20-percent and 10-percent credits were fully allowed in the taxable year the QRB was placed in service.

Section 13402(a) of the TCJA repealed the 10-percent credit for pre-1936 buildings and modified the rules for claiming the 20-percent credit for certified historic structures. Section 13402(c)(1) of the TCJA provides that these amendments are generally applicable to QRE amounts paid or incurred after December 31, 2017, subject to a transition rule provided in section 13402(c)(2) of the TCJA. This statutory transition rule provides that in the case of QREs (for either a certified historic structure eligible for a 20-percent credit or a pre-1936 building eligible for a 10-percent credit prior to December 31, 2017), with respect to any building owned or leased (as provided under present law) by the taxpayer at all times on and after January 1, 2018, the

24-month period selected by the taxpayer (section 47(c)(1)(B)(i), as amended by section 13402(b)), or the 60-month period selected by the taxpayer under the rule for phased rehabilitation (section 47(c)(1)(B)(ii), as amended by section 13402(b)), is to begin not later than the end of the 180-day period beginning on December 22, 2017, and the amendments made by section 13402 of the TCJA apply to such QREs paid or incurred after the end of the taxable year in which such 24-month or 60-month period ends.

As amended by the TCJA, section 47(a)(1) provides that for purposes of the investment credit under section 46, for any taxable year during the 5-year period beginning in the taxable year in which a QRB is placed in service, the rehabilitation credit for such taxable year is an amount equal to the ratable share for the year. Also, as amended by the TCJA, section 47(a)(2) defines the ratable share for any taxable year during the credit period as the amount equal to 20 percent of the QREs with respect to the QRB, as allocated ratably to each year during the credit period. Section 47(b)(1), which the TCJA did not amend, provides that QREs with respect to any QRB are taken into account for the taxable year in which the QRB is placed in service.

Explanation of Provisions

I. Overview

As noted in the Background, the rehabilitation credit is no longer fully allowed in the taxable year the QRB is placed in service. Instead, the rehabilitation credit must be claimed ratably over the 5-year period beginning in the taxable year in which a QRB is placed in service. The Treasury Department and the IRS are aware that taxpayers and practitioners have questioned how the 5-year period impacts taxpayers claiming the rehabilitation credit, including how to apply the special rules of section 50 relating to recapture, basis adjustment, and leased property. In particular, practitioners have questioned whether the rehabilitation credit is determined in the year the QRB is placed in service and allocated ratably over the 5-year period, or whether five separate rehabilitation credits are determined during each year of the 5-year period.

As explained in Part II of this Explanation of Provisions, these proposed regulations provide that the rehabilitation credit is properly determined in the year the QRB is placed in service (consistent with prior law) but allocated ratably over the 5-year period as required by the TCJA, rather than resulting in the determination of five separate rehabilitation credits. Similarly, as explained in Part III of this Explanation of Provisions, these proposed regulations follow this same prior law approach for the determination of a single rehabilitation credit for purposes of applying the rules of section 50. Therefore, taxpayers claiming the rehabilitation credit under section 47 with respect to QREs paid or incurred after December 31, 2017, generally will have the same Federal income tax consequences from the rules under section 50 for recapture, basis adjustment, and leased property as taxpayers claiming the rehabilitation credit under prior law.

The proposed regulations add § 1.47–7(a) through (e) and include: A general rule for calculating the rehabilitation credit; definitions of *ratable share* and *rehabilitation credit determined;* and a rule coordinating the changes to section 47 with the special rules in section 50. The proposed regulations also contain examples, including examples illustrating the interaction of section 47 with rules in section 50(a) (recapture in case of dispositions, etc.), section 50(c) (basis adjustment to investment credit property), and section 50(d)(5) (relating to certain leased property when the lessee is treated as owner and subject to an income inclusion requirement).

II. Proposed § 1.47–7(a), (b), and (c): Rehabilitation Credit Allocated Over a 5-Year Period

Consistent with section 47(a)(1), proposed § 1.47–7(a) provides a general rule that, for purposes of the investment credit under section 46, for any taxable year during the 5-year period the rehabilitation credit for the year is the ratable share.

Proposed § 1.47–7(b) generally follows the definition of ratable share in section 47(a)(2) but, for clarification, replaces ''QREs'' with the term ''rehabilitation credit determined'' as defined in proposed § 1.47–7(c). Specifically, proposed § 1.47–7(b) defines the term *ratable share* as the amount equal to 20 percent of the rehabilitation credit determined with respect to the QRB, as allocated ratably to each taxable year during the 5-year credit period. Proposed § 1.47–7(c) defines the term *rehabilitation credit determined* as the amount equal to 20 percent of the QREs, as defined in section 47(c)(2) and § 1.48–12(c) of the Income Tax Regulations, taken into account under section 47(b)(1) for the taxable year in which the QRB is placed in service. However, if the taxpayer claims the additional first year depreciation for the QREs pursuant to § 1.168(k)–2(g)(9), proposed § 1.47–7(c) defines the rehabilitation credit determined as the amount equal to 20 percent of the remaining rehabilitated basis, as defined in § 1.168(k)–2(g)(9)(i)(B), of the QRB for the taxable year in which such building is placed in service. Proposed § 1.47–7(c) is included to clarify that the rehabilitation credit is determined in the year the QRB is placed in service and allocated ratably over the 5-year period under proposed § 1.47–7(b).

Determining the total amount of the credit in the first year the QRB is placed in service and allocating the credit over the 5-year period is consistent with the text of the statute, as well as the intent of Congress, because the determination does not change the total amount of rehabilitation credit over the 5-year period or the amount of rehabilitation credit for purposes of section 46 in any individual year of the 5-year period. The plain language in section 47(a)(1), (a)(2), and (b)(1) makes clear that one rehabilitation credit is allocated ratably over a 5-year period. First, section 47(a)(1) and (a)(2) effectively allocate the 20-percent rehabilitation credit over a 5-year period. Second, section 47(b)(1) requires that QREs are taken into account in the taxable year the QRB is placed in service, which is the first year in the 5-year period. Because QREs are taken into account in the first taxable year the QRB is placed in service under section 47(b)(1), the rehabilitation credit for a QRB is effectively fixed, or determined, as of that first year. In sum, the overall structure of section 47(a) and (b)(1) functions to allocate the rehabilitation credit that is determined in the taxable year the QRB is placed in service over a 5-year period for each of those taxable years, rather than creating five separate rehabilitation credits for a single QRB.

Further, this reading of the statutory text is consistent with the conference report accompanying the TCJA (H.R. Rept. No. 466, 115th Cong.435–436 (2017)) (Conference Report) and the Joint Committee on Taxation's General Explanation of Public Law 115–97, 210 (Staff of the Joint Committee on Taxation, 115th Cong., General Explanation of Public Law 115–97 (Comm. Print 2018) (Bluebook)). The Conference Report states that Congress ''intended that the sum of the ratable shares for the taxable years during the five-year period does not exceed 100 percent of the credit for qualified rehabilitation expenditures for the qualified rehabilitated building.'' See Conference Report, at 435–436; Bluebook, at 210. By determining the

rehabilitation credit based on 100 percent of the QREs in the year QREs are taken into account under section 47(b)(1), that is, the year in which the QRB is placed in service, and ratably allocating the amount determined over the 5-year period, the proposed regulations ensure that the sum of the ratable shares will never violate Congressional intent. Comments are requested with respect to any specific concerns taxpayers may have with this plain reading of the operative statutory text.

III. Proposed § 1.47–7(d) and (e): Coordination With Section 50 and Examples

Proposed § 1.47–7(d) describes the coordination with the special rules of section 50 and makes clear that, for purposes of applying the rules in section 50, the full rehabilitation credit amount is determined in the first year of the 5-year period, and then allocated ratably over that 5-year period. Determining the credit in the same manner for purposes of sections 47 and 50 provides certainty and reduces the complexity under section 50 that would result if taxpayers were required to determine five separate rehabilitation credits. For example, if five separate rehabilitation credits were determined, then there would be five separate recapture periods under section 50(a) with respect to a single QRB. This would increase the length of the recapture period and increase the recapture amount as compared to results under section 50(a) prior to the TCJA changes to section 47. The proposed regulations ensure that this is not the result under section 50.

Moreover, in coordinating the rules between sections 47 and 50, the Treasury Department and the IRS considered the fact that that there is no indication that, in changing section 47, Congress intended to modify the application of section 50. The Conference Report and the Bluebook explain that the TCJA's amendments to section 47 retain the 20-percent credit for QREs with respect to a certified historic structure while extending the credit period from one year to five years, but nowhere in the Conference Report or the Bluebook is there any suggestion that the results for taxpayers claiming the rehabilitation credit under the rules of section 50 were intended to be different. See Conference Report, at 435–436; Bluebook, at 210. Further, the TCJA made no changes to section 50. Accordingly, the proposed regulations generally place taxpayers claiming the rehabilitation credit after the TCJA in the same position with respect to the rules of section 50 as taxpayers prior to the TCJA. Comments are requested with respect to any specific concerns taxpayers may have with this plain reading of the operative statutory text.

Proposed § 1.47–7(e) provides examples that illustrate these rules with respect to the most relevant fact patterns. In addition to examples that show the general calculation for claiming the rehabilitation credit, proposed § 1.47–7(e) demonstrates the interaction with section 50(a) (recapture in case of dispositions, etc.), section 50(c) (basis adjustment to investment credit property), and two examples to illustrate interaction with section 50(d)(5) (relating to certain leased property when the lessee is treated as owner and subject to an income inclusion requirement). The first example illustrating the interaction with section 50(d)(5) describes a transaction in which the lessee is a corporation, and in the second example the lessee is a partnership that is subject to special rules under § 1.50–1(b)(3)(i).

The Treasury Department and the IRS request comments on these examples and whether any additional examples illustrating the coordination of section 47 with other provisions of the Code and regulations are necessary. The Treasury Department and the IRS are aware that other provisions of the Code and regulations require computations that are impacted by the amount of the rehabilitation credit determined with respect to a QRB and the adjusted basis of a QRB. The Treasury Department and the IRS also request comments regarding whether special rules are needed to address how the amount of the rehabilitation credit determined and the adjusted basis of a QRB interact with those other provisions of the Code and regulations.

Proposed Applicability Date

These regulations are proposed to apply to taxable years beginning on or after the date the Treasury decision adopting these regulations as final regulations is published in the **Federal Register**. Taxpayers may rely on these proposed regulations for QREs paid or incurred after December 31, 2017, in taxable years beginning before the date the Treasury decision adopting these regulations as final regulations is published in the **Federal Register**, provided the taxpayers follow the proposed regulations in their entirety and in a consistent manner.

Special Analyses

This regulation is not subject to review under section 6(b) of Executive Order 12866 pursuant to the Memorandum of Agreement (April 11, 2018) between the Treasury Department and the Office of Management and Budget regarding review of tax regulations.

In accordance with the Regulatory Flexibility Act (5 U.S.C. chapter 6), it is hereby certified that these proposed regulations will not have a significant economic impact on a substantial number of small entities. Although the rules may affect small entities, data are not readily available about the number of taxpayers affected. The economic impact of these regulations is not likely to be significant, however, because these proposed regulations substantially incorporate statutory changes made to section 47 by the TCJA that have been effective for QREs paid of incurred after December 31, 2017. The proposed regulations will assist taxpayers in understanding the changes to section 47 and make it easier for taxpayers to comply with those changes and section 50, which was not changed by the TCJA. Notwithstanding this certification, the Treasury Department and the IRS welcome comments on the impact of these regulations on small entities.

Pursuant to section 7805(f) of the Internal Revenue Code, these regulations will be submitted to the Chief Counsel for Advocacy of the Small Business Administration for comment on their impact on small business.

Comments and Public Hearing

Before these proposed amendments to the regulations are adopted as final regulations, consideration will be given to comments that are submitted timely to the IRS as prescribed in the preamble under the **ADDRESSES** section. The Treasury Department and the IRS request comments on all aspects of the proposed regulations. Any electronic comments submitted, and to the extent practicable any paper comments submitted, will be made available at *www.regulations.gov* or upon request.

A public hearing will be scheduled if requested in writing by any person who timely submits electronic or written comments. Requests for a public hearing are also encouraged to be made electronically. If a public hearing is scheduled, notice of the date and time for the public hearing will be published in the **Federal Register**. Announcement 2020–4, 2020–17 IRB 1, provides that until further notice, public hearings conducted by the IRS will be held telephonically. Any telephonic hearing will be made accessible to people with disabilities.

Drafting Information

The principal author of these proposed regulations is Barbara J. Campbell, Office of the Associate Chief Counsel (Passthroughs and Special Industries), IRS. However, other personnel from the Treasury Department and the IRS participated in their development.

List of Subjects in 26 CFR Part 1

Income taxes, Reporting and recordkeeping requirements.

Proposed Amendments to the Regulations

Accordingly, 26 CFR part 1 is proposed to be amended as follows:

PART 1—INCOME TAXES

■ **Paragraph 1.** The authority citation for part 1 continues to read in part as follows:

Authority: 26 U.S.C. 7805 * * *

■ **Par. 2.** Section 1.47–7 is added to read as follows:

§ 1.47–7 Rehabilitation credit allocated over a 5-year period.

(a) *In general.* For purposes of section 46, for any taxable year during the 5-year period beginning in the taxable year in which a qualified rehabilitated building, as defined in section 47(c)(1) and § 1.48–12(b), is placed in service, the rehabilitation credit for the taxable year is an amount equal to the ratable share for the taxable year, provided the requirements of section 47 are satisfied. Except as provided by section 13402(c)(2) of Public Law 115–97, 131 Stat. 2054 (2017), this section applies with respect to qualified rehabilitation expenditures, as defined in section 47(c)(2) and § 1.48–12(c), paid or incurred after December 31, 2017.

(b) *Ratable share.* For purposes of paragraph (a) of this section, the term *ratable share* means, for any taxable year during the 5-year period described in such paragraph, the amount equal to 20 percent of the rehabilitation credit determined with respect to the qualified rehabilitated building, allocated ratably to each year during such period.

(c) *Rehabilitation credit determined.* The term *rehabilitation credit determined* means the amount equal to 20 percent of the qualified rehabilitation expenditures, as defined in section 47(c)(2) and § 1.48–12(c), taken into account under section 47(b)(1) for the taxable year in which the qualified rehabilitated building is placed in service. However, if the taxpayer claims the additional first year depreciation for the qualified rehabilitation expenditures pursuant to § 1.168(k)–2(g)(9), the term *rehabilitation credit determined* means the amount equal to 20 percent of the remaining rehabilitated basis, as defined in § 1.168(k)–2(g)(9)(i)(B), of the qualified rehabilitation building for the taxable year in which such building is placed in service.

(d) *Coordination with section 50.* For purposes of section 50 and § 1.50–1, the amount of the rehabilitation credit determined is the amount defined in paragraph (c) of this section.

(e) *Examples.* The provisions of paragraphs (a) through (d) of this section are illustrated by the following examples. Assume that the additional first year depreciation deduction provided by section 168(k) is not allowed or allowable for the qualified rehabilitation expenditures.

(1) *Example 1: Rehabilitation Credit Determined and Ratable Share.* Between February 1, 2021 and October 1, 2021, X, a calendar year C corporation, incurred qualified rehabilitation expenditures of $200,000 with respect to a qualified rehabilitated building. X placed the building in service on October 15, 2021. X's rehabilitation credit determined in 2021 under paragraph (c) of this section is $40,000 ($200,000 × 0.20). For purposes of section 46, for each taxable year during the 5-year period beginning in 2021, the ratable share allocated under paragraph (b) of this section for the year is $8,000 ($40,000 × 0.20).

(2) *Example 2: Coordination with section 50(c).* The facts are the same as in paragraph (e)(1) of this section (Example 1). For purposes of determining the amount of X's basis adjustment in 2021 under section 50(c), the amount of the rehabilitation credit determined under paragraph (c) of this section is $40,000.

(3) *Example 3: Coordination with section 50(a).* The facts are the same as in paragraph (e)(1) of this section (Example 1). In 2021 and 2022, X claimed the full amount of the ratable share allowed under section 46, or $8,000 per taxable year. X's total allowable ratable share for 2023 through 2025 is $24,000 ($8,000 allowable per taxable year). On November 1, 2023, X disposes of the qualified rehabilitated building. Under section 50(a)(1)(B)(iii), because the period of time between when the qualified rehabilitated building was placed in service is more than two, but less than 3 full years, the applicable recapture percentage is 60%. Based on these facts, X has an increase in tax of $9,600 under section 50(a) ($16,000 of credit claimed in 2021 and 2022 × 0.60) and has $3,200 of credits remaining in each of 2023 through 2025, after forgoing $4,800 in credits in each of the years 2023 through 2025 ($8,000 × 0.60).

(4) *Example 4: Coordination with section 50(d)(5) and § 1.50–1; C corporation lessee.* X, a calendar year C corporation, leases nonresidential real property from Y. The property is a qualified rehabilitated building that is placed in service on October 15, 2021. Under paragraph (c) of this section, the amount of the rehabilitation credit determined is $100,000. Y elects under § 1.48–4 to treat X as having acquired the property. The shortest recovery period that could be available to the property under section 168 is 39 years. Because Y has elected to treat X as having acquired the property, Y does not reduce its basis in the property under section 50(c). Instead, pursuant to section 50(d)(5) and § 1.50–1, X, the lessee of the property, must include ratably in gross income over 39 years an amount equal to the rehabilitation credit determined with respect to such property.

(5) *Example 5: Coordination with section 50(d)(5) and § 1.50–1; partnership lessee.* A and B, calendar year taxpayers, form a partnership, the AB partnership, that leases nonresidential real property from Y. The property is a qualified rehabilitation building that is placed in service on October 15, 2021. Under paragraph (c) of this section, the amount of the rehabilitation credit determined is $200,000. Y elects under § 1.48–4 to treat the AB partnership as having acquired the property. The shortest recovery period that could be available to the property under section 168 is 39 years. Because Y has elected to treat the AB partnership as having acquired the property, Y does not reduce its basis in the building under section 50(c). Instead, A and B, the ultimate credit claimants, as defined in § 1.50–(b)(3)(ii), must include the amount of the rehabilitation credit determined under paragraph (c) of this section with respect to A and B ratably in gross income over 39 years, the shortest recovery period available with respect to such property.

(f) *Applicability date.* These regulations are proposed to apply to taxable years beginning on or after the date the Treasury decision adopting these regulations as final regulations is published in the **Federal Register**.

Sunita Lough,

Deputy Commissioner for Services and Enforcement.

[FR Doc. 2020–09879 Filed 5–21–20; 8:45 am]

BILLING CODE 4830–01–P

DEPARTMENT OF HOMELAND SECURITY

Coast Guard

33 CFR Part 100

[Docket Number USCG–2020–0143]

RIN 1625–AA08

Special Local Regulation; Upper Potomac River, National Harbor, MD

AGENCY: Coast Guard, DHS.

ACTION: Supplemental notice of proposed rulemaking; re-opening of public comment period.

SUMMARY: On April 2, 2020, the Coast Guard published a notice of proposed

rulemaking to establish temporary special local regulations on June 20, 2020, to provide for the safety of life on certain navigable waters of the Upper Potomac River during the Washington, DC Sharkfest Swim. The Coast Guard is publishing this revised notice of proposed rulemaking because the event sponsor has postponed the event until September 27, 2020. We invite your comments on this proposed rulemaking.

DATES: Comments and related material must be received by the Coast Guard on or before June 22, 2020.

ADDRESSES: You may submit comments identified by docket number USCG–2020–0143 using the Federal eRulemaking Portal at *http://www.regulations.gov.* See the ''Public Participation and Request for Comments'' portion of the **SUPPLEMENTARY INFORMATION** section for further instructions on submitting comments.

FOR FURTHER INFORMATION CONTACT: If you have questions about this proposed rulemaking, call or email Mr. Ron Houck, U.S. Coast Guard Sector Maryland-National Capital Region; telephone 410–576–2674, email *Ronald.L.Houck@uscg.mil.*

SUPPLEMENTARY INFORMATION:

I. Table of Abbreviations

CFR Code of Federal Regulations
COTP Captain of the Port
DHS Department of Homeland Security
FR Federal Register
NPRM Notice of proposed rulemaking
PATCOM Coast Guard Patrol Commander
§ Section
U.S.C. United States Code

II. Background, Purpose, and Legal Basis

The Coast Guard published a NPRM on April 1, 2020 (85 FR 18157), proposing to establish a special local regulation for the Washington, DC Sharkfest Swim on the Potomac River, on June 20, 2020. After publication of that notice, the Coast Guard was informed by the sponsor that the event was being postponed until September 27, 2020. This is the only change from the original proposal published on April 1st. We are issuing this supplemental proposal to amend the special local regulation due to account for the change in the event date, and re-open the comment period to account for this change.

The purpose of this rulemaking is to protect event participants, non-participants and transiting vessels on certain waters of the Upper Potomac River before, during, and after the scheduled event. The Coast Guard is proposing this rulemaking under authority in 46 U.S.C. 70034 (previously 33 U.S.C. 1231).

III. Discussion of Proposed Rule

The COTP Maryland-National Capital Region is proposing to establish special local regulations from 7 a.m. through 11 a.m. on September 27, 2020. There is no alternate date planned for this event. The regulated area would cover all navigable waters of the Upper Potomac River, within an area bounded by a line connecting the following points: From the Rosilie Island shoreline at latitude 38°47′30.30″ N, longitude 077°01′26.70 W, thence west to latitude 38°47′30.00″ N, longitude 077°01′37.30″ W, thence south to latitude 38°47′08.20″ N, longitude 077°01′37.30″ W, thence east to latitude 38°47′09.00″ N, longitude 077°01′09.20″ W, thence southeast along the pier to latitude 38°47′06.30″ N, longitude 077°01′02.50 W, thence north along the shoreline and west along the southern extent of the Woodrow Wilson (I–95/I–495) Memorial Bridge and south and west along the shoreline to the point of origin, located at National Harbor, MD. The regulated area is approximately 1,210 yards in length and 740 yards in width.

The proposed special local regulations duration and size of the regulated area are intended to ensure the safety of life on these navigable waters before, during, and after the open water swim event, scheduled from 7:30 a.m. to 10:30 a.m. on September 27, 2020. The COTP and the Coast Guard Patrol Commander (PATCOM) would have authority to forbid and control the movement of all vessels and persons, including event participants, in the regulated area.

Except for Washington, DC Sharkfest Swim event participants and vessels already at berth, a vessel or person would be required to get permission from the COTP or PATCOM before entering the regulated area. Vessel operators can request permission to enter and transit through the regulated area by contacting the PATCOM on VHF–FM channel 16. Vessel traffic would be able to safely transit the regulated area once the PATCOM deems it safe to do so. A person or vessel not registered with the event sponsor as a participant or assigned as official patrols would be considered a non-participant. Official Patrols are any vessel assigned or approved by the Commander, Coast Guard Sector Maryland-National Capital Region with a commissioned, warrant, or petty officer on board and displaying a Coast Guard ensign.

If permission is granted by the COTP or PATCOM, a person or vessel would be allowed to enter the regulated area or pass directly through the regulated area as instructed. Vessels would be required to operate at a safe speed that minimizes wake while within the regulated area. Official patrol vessels will direct non-participants while within the regulated area. Vessels would be prohibited from loitering within the navigable channel. Only participant vessels and official patrol vessels would be allowed to enter the swim race area.

The regulatory text we are proposing appears at the end of this document.

IV. Regulatory Analyses

We developed this proposed rule after considering numerous statutes and Executive orders related to rulemaking. Below we summarize our analyses based on a number of these statutes and Executive orders, and we discuss First Amendment rights of protestors.

A. Regulatory Planning and Review

Executive Orders 12866 and 13563 direct agencies to assess the costs and benefits of available regulatory alternatives and, if regulation is necessary, to select regulatory approaches that maximize net benefits. Executive Order 13771 directs agencies to control regulatory costs through a budgeting process. This NPRM has not been designated a ''significant regulatory action,'' under Executive Order 12866. Accordingly, the NPRM has not been reviewed by the Office of Management and Budget (OMB), and pursuant to OMB guidance it is exempt from the requirements of Executive Order 13771.

This regulatory action determination is based on size, time of day and duration of the regulated area, which would impact a small designated area of the Upper Potomac River for 4 hours. The Coast Guard would issue a Broadcast Notice to Mariners via VHF–FM marine channel 16 about the status of the regulated area. Moreover, the rule would allow vessels to seek permission to enter the regulated area, and vessel traffic would be able to safely transit the regulated area once the PATCOM deems it safe to do so.

B. Impact on Small Entities

The Regulatory Flexibility Act of 1980, 5 U.S.C. 601–612, as amended, requires Federal agencies to consider the potential impact of regulations on small entities during rulemaking. The term ''small entities'' comprises small businesses, not-for-profit organizations that are independently owned and operated and are not dominant in their fields, and governmental jurisdictions with populations of less than 50,000. The Coast Guard certifies under 5 U.S.C.

605(b) that this proposed rule would not have a significant economic impact on a substantial number of small entities.

While some owners or operators of vessels intending to transit the safety zone may be small entities, for the reasons stated in section IV.A above, this proposed rule would not have a significant economic impact on any vessel owner or operator.

If you think that your business, organization, or governmental jurisdiction qualifies as a small entity and that this rule would have a significant economic impact on it, please submit a comment (see **ADDRESSES**) explaining why you think it qualifies and how and to what degree this rule would economically affect it.

Under section 213(a) of the Small Business Regulatory Enforcement Fairness Act of 1996 (Pub. L. 104–121), we want to assist small entities in understanding this proposed rule. If the rule would affect your small business, organization, or governmental jurisdiction and you have questions concerning its provisions or options for compliance, please contact the person listed in the **FOR FURTHER INFORMATION CONTACT** section. The Coast Guard will not retaliate against small entities that question or complain about this proposed rule or any policy or action of the Coast Guard.

C. Collection of Information

This proposed rule would not call for a new collection of information under the Paperwork Reduction Act of 1995 (44 U.S.C. 3501–3520).

D. Federalism and Indian Tribal Governments

A rule has implications for federalism under Executive Order 13132, Federalism, if it has a substantial direct effect on the States, on the relationship between the national government and the States, or on the distribution of power and responsibilities among the various levels of government. We have analyzed this proposed rule under that Order and have determined that it is consistent with the fundamental federalism principles and preemption requirements described in Executive Order 13132.

Also, this proposed rule does not have tribal implications under Executive Order 13175, Consultation and Coordination with Indian Tribal Governments, because it would not have a substantial direct effect on one or more Indian tribes, on the relationship between the Federal Government and Indian tribes, or on the distribution of power and responsibilities between the Federal Government and Indian tribes. If you believe this proposed rule has implications for federalism or Indian tribes, please contact the person listed in the **FOR FURTHER INFORMATION CONTACT** section.

E. Unfunded Mandates Reform Act

The Unfunded Mandates Reform Act of 1995 (2 U.S.C. 1531–1538) requires Federal agencies to assess the effects of their discretionary regulatory actions. In particular, the Act addresses actions that may result in the expenditure by a State, local, or tribal government, in the aggregate, or by the private sector of $100,000,000 (adjusted for inflation) or more in any one year. Though this proposed rule would not result in such an expenditure, we do discuss the effects of this rule elsewhere in this preamble.

F. Environment

We have analyzed this proposed rule under Department of Homeland Security Directive 023–01, Rev. 1, associated implementing instructions, and Environmental Planning COMDTINST 5090.1 (series), which guide the Coast Guard in complying with the National Environmental Policy Act of 1969 (42 U.S.C. 4321–4370f), and have made a preliminary determination that this action is one of a category of actions that do not individually or cumulatively have a significant effect on the human environment. This proposed rule involves implementation of regulations within 33 CFR part 100 applicable to organized marine events on the navigable waters of the United States that could negatively impact the safety of waterway users and shore side activities in the event area lasting for 4 hours. Normally such actions are categorically excluded from further review under paragraph L[61] of Appendix A, Table 1 of DHS Instruction Manual 023–01–001–01, Rev. 01. We seek any comments or information that may lead to the discovery of a significant environmental impact from this proposed rule.

G. Protest Activities

The Coast Guard respects the First Amendment rights of protesters. Protesters are asked to contact the person listed in the **FOR FURTHER INFORMATION CONTACT** section to coordinate protest activities so that your message can be received without jeopardizing the safety or security of people, places, or vessels.

V. Public Participation and Request for Comments

We view public participation as essential to effective rulemaking, and will consider all comments and material received during the comment period. Your comment can help shape the outcome of this rulemaking. If you submit a comment, please include the docket number for this rulemaking, indicate the specific section of this document to which each comment applies, and provide a reason for each suggestion or recommendation.

We encourage you to submit comments through the Federal eRulemaking Portal at *http://www.regulations.gov.* If your material cannot be submitted using *http://www.regulations.gov,* contact the person in the **FOR FURTHER INFORMATION CONTACT** section of this document for alternate instructions.

We accept anonymous comments. All comments received will be posted without change to *http://www.regulations.gov* and will include any personal information you have provided. For more about privacy and submissions in response to this docket, see DHS's Correspondence System of Records notice (84 FR 48645, September 26, 2018).

Documents mentioned in this NPRM as being available in the docket, and all public comments, will be in our online docket at *http://www.regulations.gov* and can be viewed by following that website's instructions. Additionally, if you go to the online docket and sign up for email alerts, you will be notified when comments are posted or a final rule is published.

List of Subjects in 33 CFR Part 100

Marine safety, Navigation (water), Reporting and recordkeeping requirements, Waterways.

For the reasons discussed in the preamble, the Coast Guard is proposing to amend 33 CFR part 100 as follows:

PART 100—SAFETY OF LIFE ON NAVIGABLE WATERS

■ 1. The authority citation for part 100 continues to read as follows:

Authority: 46 U.S.C. 70041; 33 CFR 1.05–1.

■ 2. Add § 100.T05–0143 to read as follows:

§ 100.T05–0143 Washington, DC Sharkfest Swim, Upper Potomac River, National Harbor, MD.

(a) *Regulated area.* The regulations in this section apply to the following area: All navigable waters of the Upper Potomac River, within an area bounded by a line connecting the following points: From the Rosilie Island shoreline at latitude 38°47′30.30″ N, longitude 077°01′26.70 W, thence west

to latitude 38°47′30.00″ N, longitude 077°01′37.30″ W, thence south to latitude 38°47′08.20″ N, longitude 077°01′37.30″ W, thence east to latitude 38°47′09.00″ N, longitude 077°01′09.20″ W, thence southeast along the pier to latitude 38°47′06.30″ N, longitude 077°01′02.50″ W, thence north along the shoreline and west along the southern extent of the Woodrow Wilson (I–95/I–495) Memorial Bridge and south and west along the shoreline to the point of origin, located at National Harbor, MD. These coordinates are based on datum NAD 1983.

(b) *Definitions.* As used in this section—

Captain of the Port (COTP) Maryland-National Capital Region means the Commander, U.S. Coast Guard Sector Maryland-National Capital Region or any Coast Guard commissioned, warrant or petty officer who has been authorized by the COTP to act on his behalf.

Coast Guard Patrol Commander (PATCOM) means a commissioned, warrant, or petty officer of the U.S. Coast Guard who has been designated by the Commander, Coast Guard Sector Maryland-National Capital Region.

Official Patrol means any vessel assigned or approved by Commander, Coast Guard Sector Maryland-National Capital Region with a commissioned, warrant, or petty officer on board and displaying a Coast Guard ensign.

Participant means all persons and vessels registered with the event sponsor as participating in the Washington DC Sharkfest Swim event or otherwise designated by the event sponsor as having a function tied to the event.

(c) *Regulations.* (1) Except for vessels already at berth, all non-participants are prohibited from entering, transiting through, anchoring in, or remaining within the regulated area described in paragraph (a) of this section unless authorized by the COTP Maryland-National Capital Region or PATCOM.

(2) To seek permission to enter, contact the COTP Maryland-National Capital Region at telephone number 410–576–2693 or on Marine Band Radio, VHF–FM channel 16 (156.8 MHz) or the PATCOM on Marine Band Radio, VHF–FM channel 16 (156.8 MHz). Those in the regulated area must comply with all lawful orders or directions given to them by the COTP Maryland-National Capital Region or PATCOM.

(3) The COTP Maryland-National Capital Region will provide notice of the regulated area through advanced notice via Fifth Coast Guard District Local Notice to Mariners, broadcast notice to mariners, and on-scene official patrols.

(d) *Enforcement officials.* The Coast Guard may be assisted with marine event patrol and enforcement of the regulated area by other Federal, State, and local agencies.

(e) *Enforcement period.* This section will be enforced from 7 a.m. to 11 a.m. September 27, 2020.

Dated: May 14, 2020.

Joseph B. Loring,

Captain, U.S. Coast Guard, Captain of the Port Maryland-National Capital Region.

[FR Doc. 2020–10979 Filed 5–21–20; 8:45 am]

BILLING CODE 9110–04–P

DEPARTMENT OF HOMELAND SECURITY

Coast Guard

33 CFR Part 100

[Docket Number USCG–2020–0192]

RIN 1625–AA08

Special Local Regulation; Ohio River, Louisville, KY

AGENCY: Coast Guard, DHS.

ACTION: Notice of proposed rulemaking.

SUMMARY: The Coast Guard is proposing to establish a special local regulation for all navigable waters of the Ohio River from mile marker (MM) 597.0 to MM 607.0. This action is necessary to provide for the safety of life on these navigable waters near Louisville, KY, during Thunder over Louisville. Entry into, transiting through, or anchoring within this regulated area is prohibited unless authorized by the Captain of the Port Sector Ohio Valley (COTP) or a designated representative. We invite your comments on this proposed rulemaking.

DATES: Comments and related material must be received by the Coast Guard on or before June 22, 2020.

ADDRESSES: You may submit comments identified by docket number USCG–2020–0192 using the Federal eRulemaking Portal at *https://www.regulations.gov.* See the ''Public Participation and Request for Comments'' portion of the **SUPPLEMENTARY INFORMATION** section for further instructions on submitting comments.

FOR FURTHER INFORMATION CONTACT: If you have questions about this proposed rulemaking, call or email MST2 Craig Colton, Waterways Department Sector Ohio Valley, U.S. Coast Guard; telephone 502–779–5335, email *SECOHV-WWM@uscg.mil.*

SUPPLEMENTARY INFORMATION:

I. Table of Abbreviations

COTP Captain of the Port Sector Ohio Valley
CFR Code of Federal Regulations
DHS Department of Homeland Security
FR Federal Register
NPRM Notice of proposed rulemaking
§ Section
U.S.C. United States Code

II. Background, Purpose, and Legal Basis

On March 17, 2020, the Coast Guard was notified of a delay to the Thunder Over Louisville Marine Event originally scheduled for April 17, 2020 through April 19, 2020. The event has been postponed until August 14, 2020 through August 16, 2020 and will take place on the Ohio River, between Mile Marker (MM) 597.0 to MM 607.0 The Captain of the Port Sector Ohio Valley (COTP) has determined that potential hazards associated with the Thunder Over Louisville airshow and fireworks display would be a safety concern for anyone within a 10 mile stretch of the Ohio River.

The purpose of this rulemaking is to ensure the safety of vessels and the navigable waters within the ten mile stretch of the Ohio River before, during, and after the scheduled event. The Coast Guard is proposing this rulemaking under authority in 46 U.S.C. 70034 (previously 33 U.S.C. 1231).

III. Discussion of Proposed Rule

The COTP is proposing to establish a special local regulation that will be enforced from 11 a.m. to 6 p.m. on August 14, 2020, from 12 p.m. to 11:59 p.m. on August 15, 2020, and from 12 a.m. to 2 a.m. on August 16, 2020. The special local regulation would cover all navigable waters of the Ohio River from MM 597.0 to MM 607.0. The duration of the special local regulation is intended to ensure the safety of waterway users and these navigable waters before, during, and after the scheduled event. No vessel or person is permitted to enter the special local regulated area without obtaining permission from the COTP or a designated representative. The regulatory text we are proposing appears at the end of this document.

IV. Regulatory Analyses

We developed this proposed rule after considering numerous statutes and Executive orders related to rulemaking. Below we summarize our analyses based on a number of these statutes and Executive orders, and we discuss First Amendment rights of protestors.

A. Regulatory Planning and Review

Executive Orders 12866 and 13563 direct agencies to assess the costs and

benefits of available regulatory alternatives and, if regulation is necessary, to select regulatory approaches that maximize net benefits. Executive Order 13771 directs agencies to control regulatory costs through a budgeting process. This NPRM has not been designated a ''significant regulatory action,'' under Executive Order 12866. Accordingly, the NPRM has not been reviewed by the Office of Management and Budget (OMB), and pursuant to OMB guidance it is exempt from the requirements of Executive Order 13771.

This regulatory action determination is based on the size, location, duration, and time-of-day of the special local regulation. Entry into the regulated area will be prohibited from 11 a.m. to 6 p.m. on August 14, 2020, from 12 p.m. to 11:59 p.m. on August 15, 2020, and from 12 a.m. to 2 a.m. on August 16, 2020 from Ohio River MM 597.0 to MM 607.0, unless authorized by the Captain of the Port Sector Ohio Valley (COTP) or a designated representative. Moreover, the Coast Guard will issue written Local Notice to Mariners and Broadcast Notice to Mariners via VHF–FM marine channel 16 about the temporary special local regulation that is in place.

B. Impact on Small Entities

The Regulatory Flexibility Act of 1980, 5 U.S.C. 601–612, as amended, requires Federal agencies to consider the potential impact of regulations on small entities during rulemaking. The term ''small entities'' comprises small businesses, not-for-profit organizations that are independently owned and operated and are not dominant in their fields, and governmental jurisdictions with populations of less than 50,000. The Coast Guard certifies under 5 U.S.C. 605(b) that this proposed rule would not have a significant economic impact on a substantial number of small entities.

While some owners or operators of vessels intending to transit the safety zone may be small entities, for the reasons stated in section IV.A above, this proposed rule would not have a significant economic impact on any vessel owner or operator.

If you think that your business, organization, or governmental jurisdiction qualifies as a small entity and that this rule would have a significant economic impact on it, please submit a comment (see **ADDRESSES**) explaining why you think it qualifies and how and to what degree this rule would economically affect it.

Under section 213(a) of the Small Business Regulatory Enforcement Fairness Act of 1996 (Pub. L. 104–121), we want to assist small entities in understanding this proposed rule. If the rule would affect your small business, organization, or governmental jurisdiction and you have questions concerning its provisions or options for compliance, please call or email the person listed in the **FOR FURTHER INFORMATION CONTACT** section. The Coast Guard will not retaliate against small entities that question or complain about this proposed rule or any policy or action of the Coast Guard.

C. Collection of Information

This proposed rule would not call for a new collection of information under the Paperwork Reduction Act of 1995 (44 U.S.C. 3501–3520).

D. Federalism and Indian Tribal Governments

A rule has implications for federalism under Executive Order 13132 (Federalism), if it has a substantial direct effect on the States, on the relationship between the National Government and the States, or on the distribution of power and responsibilities among the various levels of government. We have analyzed this proposed rule under that Order and have determined that it is consistent with the fundamental federalism principles and preemption requirements described in Executive Order 13132.

Also, this proposed rule does not have tribal implications under Executive Order 13175 (Consultation and Coordination with Indian Tribal Governments) because it would not have a substantial direct effect on one or more Indian tribes, on the relationship between the Federal Government and Indian tribes, or on the distribution of power and responsibilities between the Federal Government and Indian tribes. If you believe this proposed rule has implications for federalism or Indian tribes, please call or email the person listed in the **FOR FURTHER INFORMATION CONTACT** section.

E. Unfunded Mandates Reform Act

The Unfunded Mandates Reform Act of 1995 (2 U.S.C. 1531–1538) requires Federal agencies to assess the effects of their discretionary regulatory actions. In particular, the Act addresses actions that may result in the expenditure by a State, local, or tribal government, in the aggregate, or by the private sector of $100,000,000 (adjusted for inflation) or more in any one year. Though this proposed rule would not result in such an expenditure, we do discuss the effects of this rule elsewhere in this preamble.

F. Environment

We have analyzed this proposed rule under Department of Homeland Security Directive 023–01, Rev. 1, associated implementing instructions, and Environmental Planning COMDTINST 5090.1 (series), which guide the Coast Guard in complying with the National Environmental Policy Act of 1969 (42 U.S.C. 4321–4370f), and have made a preliminary determination that this action is one of a category of actions that do not individually or cumulatively have a significant effect on the human environment. This proposed rule involves a special local regulation area lasting 21 hours over three days on all navigable waters extending ten miles of the Ohio River. Normally such actions are categorically excluded from further review under paragraph L61 of Appendix A, Table 1 of DHS Instruction Manual 023–01–001–01, Rev. 1. We seek any comments or information that may lead to the discovery of a significant environmental impact from this proposed rule.

G. Protest Activities

The Coast Guard respects the First Amendment rights of protesters. Protesters are asked to call or email the person listed in the **FOR FURTHER INFORMATION CONTACT** section to coordinate protest activities so that your message can be received without jeopardizing the safety or security of people, places, or vessels.

V. Public Participation and Request for Comments

We view public participation as essential to effective rulemaking, and will consider all comments and material received during the comment period. Your comment can help shape the outcome of this rulemaking. If you submit a comment, please include the docket number for this rulemaking, indicate the specific section of this document to which each comment applies, and provide a reason for each suggestion or recommendation.

We encourage you to submit comments through the Federal eRulemaking Portal at *https://www.regulations.gov.* If your material cannot be submitted using *https://www.regulations.gov,* call or email the person in the **FOR FURTHER INFORMATION CONTACT** section of this document for alternate instructions.

We accept anonymous comments. All comments received will be posted without change to *https://www.regulations.gov* and will include any personal information you have provided. For more about privacy and

submissions in response to this document, see DHS's eRulemaking System of Records notice (85 FR 14226, March 11, 2020).

Documents mentioned in this NPRM as being available in the docket, and all public comments, will be in our online docket at *https://www.regulations.gov* and can be viewed by following that website's instructions. Additionally, if you go to the online docket and sign up for email alerts, you will be notified when comments are posted or a final rule is published.

List of Subjects in 33 CFR Part 100

Marine safety, Navigation (water), Reporting and recordkeeping requirements, Waterways.

For the reasons discussed in the preamble, the Coast Guard proposes to amend 33 CFR part 100 as follows:

PART 100—SAFETY OF LIFE ON NAVIGABLE WATERS

■ 1. The authority citation for part 100 continues to read as follows:

Authority: 46 U.S.C. 70041; 33 CFR1.05–1.

■ 2. Add § 100.35T08–0192 to read as follows:

§ 100.35T08–0192 Special Local Regulation; Ohio River, Louisville, KY.

(a) *Regulated area.* All navigable waters of the Ohio River from mile marker (MM) 597.0 to MM 607.0 in Louisville, KY.

(b) *Enforcement period.* This section will be enforced from 11 a.m. to 6 p.m. on August 14, 2020, from 12 p.m. to 11:59 p.m. on August 15, 2020, and from 12 a.m. to 2 a.m. on August 16, 2020. The Captain of the Port Sector Ohio Valley (COTP) or a designated representative will inform the public through broadcast notice to mariners of the enforcement period for the special local regulation.

(c) *Special local regulations.*

(1) In accordance with the general regulations in § 100 of this part, entry into this area is prohibited unless authorized by the COTP or a designated representative.

(2) Recreational vessels may be permitted to transit the regulated area, but are restricted to the Indiana side of the navigation channel. There shall be no anchoring or loitering in the navigation channel. There is a no-entry zone starting at Ohio River MM 602.7 through MM 607.0. Recreational vessels transiting into and away from this area are restricted to the slowest safe speed creating minimum wake.

(3) The COTP may terminate the event or the operation of any vessel at any time it is deemed necessary for the protection of life or property.

(4) All other persons or vessels desiring entry into or passage through the area must request permission from the COTP or a designated representative. U.S. Coast Guard Sector Ohio Valley may be contacted on VHF Channel 13 or 16, or at 1–800–253–7465.

Dated: April 23, 2020.

A.M. Beach,

Captain, U.S. Coast Guard, Captain of the Port Sector Ohio Valley.

[FR Doc. 2020–10633 Filed 5–21–20; 8:45 am]

BILLING CODE 9110–04–P

ENVIRONMENTAL PROTECTION AGENCY

40 CFR Part 2

[EPA–HQ–OA–2020–0128, FRL–010007–83–OP]

RIN 2010–AA13

EPA Guidance; Administrative Procedures for Issuance and Public Petitions

AGENCY: Environmental Protection Agency (EPA).

ACTION: Proposed rule.

SUMMARY: These proposed regulations would, if finalized, establish the procedures and requirements for how the U.S. Environmental Protection Agency (EPA) will manage the issuance of guidance documents subject to the requirements of the Executive order entitled ''Promoting the Rule of Law Through Improved Agency Guidance Documents.'' These regulations establish general requirements and procedures for certain guidance documents issued by the EPA and incorporates additional requirements for guidance documents determined to be significant guidance under the Executive order. These regulations also provide procedures for the public to petition for the modification or withdrawal of active guidance documents under the Executive order. These regulations are intended to increase the transparency of EPA's guidance practices and improve the process used to manage EPA guidance documents.

DATES: Comments must be received on or before June 22, 2020.

ADDRESSES: Send comments, identified by Docket ID No. EPA–HQ–OA–2020–0128, by any of the following methods:

• *Federal eRulemaking Portal: https://www.regulations.gov/* (our preferred method). Follow the online instructions for submitting comments.

• *Email: docket_oms@epa.gov.* Include Docket ID No. EPA–HQ–OA–2020–0128 in the subject line of the message.

Instructions: All submissions received must include the Docket ID No. for this rulemaking. Comments received may be posted without change to *https://www.regulations.gov/,* including any personal information provided. For detailed instructions on sending comments and additional information on the rulemaking process, see the ''Public Participation'' heading of the **SUPPLEMENTARY INFORMATION** section of this document. Out of an abundance of caution for members of the public and our staff, the EPA Docket Center and Reading Room was closed to public visitors on March 31, 2020, to reduce the risk of transmitting COVID–19. Our Docket Center staff will continue to provide remote customer service via email, phone, and webform. We encourage the public to submit comments via *https://www.regulations.gov* or email, as there is a temporary suspension of mail delivery to EPA, and no hand deliveries are currently accepted. For further information on EPA Docket Center services and the current status, please visit us online at *https://www.epa.gov/dockets.*

FOR FURTHER INFORMATION CONTACT: Sharon Cooperstein, Policy and Regulatory Analysis Division, Office of Regulatory Policy and Management (Mail Code 1803A), Environmental Protection Agency, 1200 Pennsylvania Avenue Northwest, Washington, DC 20460; telephone number: 202–564–7051; email address: *cooperstein.sharon@epa.gov.*

SUPPLEMENTARY INFORMATION:

I. General Information

A. Written Comments

Submit your comments, identified by Docket ID No. EPA–HQ–OA–2020–0128, at *https://www.regulations.gov* (our preferred method), or the other methods identified in the **ADDRESSES** section. Once submitted, comments cannot be edited or removed from the docket. The EPA may publish any comment received to its public docket. Do not submit electronically any information you consider to be Confidential Business Information (CBI) or other information whose disclosure is restricted by statute. Multimedia submissions (audio, video, etc.) must be accompanied by a written comment. The written comment is considered the official comment and should include

discussion of all points you wish to make. The EPA will generally not consider comments or comment contents located outside of the primary submission (*i.e.* on the web, cloud, or other file sharing system). For additional submission methods, the full EPA public comment policy, information about CBI or multimedia submissions, and general guidance on making effective comments, please visit *https://www.epa.gov/dockets/commenting-epa-dockets.*

B. Does this action apply to me?

This is a rule of Agency procedure and practice. The provisions only apply to the EPA and do not regulate any external entities.

C. What action is the Agency taking?

This action solicits comment from the public on a proposed regulation establishing procedures that the EPA intends to use to issue guidance documents that are subject to the requirements of Executive Order (E.O.) 13891, ''Promoting the Rule of Law Through Improved Agency Guidance Documents'' (84 FR 55237, October 15, 2019), which directs Federal agencies to develop regulations to set forth processes and procedures for issuing guidance documents. The Administrator has sole and unreviewable discretion to deviate from this procedure.

D. What is the Agency's authority for taking this action?

The EPA is authorized to promulgate this rule under its housekeeping authority. The Federal Housekeeping Statute provides that ''[t]he head of an Executive department or military department may prescribe regulations for the government of his department, the conduct of its employees, the distribution and performance of its business, and the custody, use, and preservation of its records, papers, and property.'' 5 U.S.C. 301. The EPA gained housekeeping authority through the Reorganization Plan No. 3 of 1970, 84 Stat. 2086 (July 9, 1970), which ''convey[s] to the [EPA] Administrator all of the housekeeping authority available to other department heads under section 301'' and demonstrates that ''Congress has vested the Administrator with the authority to run EPA, to exercise its functions, and to issue regulations incidental to the performance of those functions.'' [1]

The Agency considers this action a rule of agency organization, procedure, or practice that lacks the force and effect of law. The EPA determined, as a matter of good government, to seek comment from the public. The Administrative Procedure Act (APA), 5 U.S.C. 553(b)(3)(A), provides that an agency may issue interpretive rules, general statements of policy, or rules of agency organization, procedure, or practice without providing notice and an opportunity for public comment.

II. Background

The EPA uses an open and fair regulatory process, including notice and an opportunity for comment, when imposing new obligations on the public, consistent with applicable law and following appropriate procedures. The EPA considers and responds to applicable comments before publishing final regulations in the **Federal Register.** Legally binding requirements are imposed on the public only through statutes and implementing regulations and on parties on a case-by-case basis through adjudications. Exceptions may exist when legally binding requirements are authorized by law through other means or when they are incorporated into a contract.

The EPA may issue non-binding guidance using a variety of methods to clarify existing obligations and provide information to help regulated entities comply with requirements. Guidance documents come in a variety of formats, including interpretive memoranda, policy statements, manuals, bulletins, advisories, and more. Any document that satisfies the definition of ''guidance document'' above would qualify, regardless of name or format.

Such guidance is not subject to APA notice-and-comment requirements. As such, EPA guidance documents are legally non-binding. The EPA does, however, often work with stakeholders to develop guidance documents, provide opportunities for public review and comment on the draft guidance document, and announces the availability of final guidance documents. Nevertheless, members of the public have noted that it is often difficult to identify all guidance documents that the EPA uses and relies upon. This regulation will improve the ability of members of the public to more easily identify all the guidance documents that the EPA uses and relies upon, resolving any concerns over the difficulty assessing the final and effective guidance of the Agency.

Well-designed guidance documents can serve many important functions in regulatory programs. The EPA may provide guidance to interpret existing law or to clarify how it intends to implement a legal requirement. Additionally, EPA may generate guidance that sets forth a policy on a statutory, regulatory, or technical issue. Guidance documents, when used properly, can also help increase efficiency, and improve the public's understanding of the EPA's policies. Over reliance on guidance, to the exclusion of rulemaking, however, decreases the transparency of Agency implementation of legal requirements and can lead to inequitable outcomes.

On October 9, 2019, the President signed E.O. 13891, ''Promoting the Rule of Law Through Improved Agency Guidance Documents.'' E.O. 13891 directs Federal agencies to finalize regulations that ''set forth processes and procedures for issuing guidance documents.'' [2] E.O. 13891 notes that ''Americans deserve an open and fair regulatory process that imposes new obligations on the public only when consistent with applicable law and after an agency follows appropriate procedures.'' [3] A central principle of E.O. 13891 is that guidance documents should clarify existing obligations only; they should not be a vehicle for implementing new, binding requirements on the public. E.O. 13891 recognizes that these documents, when designated as significant guidance documents, could benefit from public input prior to issuance. On October 31, 2019, the White House Office of Management and Budget (OMB) Office of Information and Regulatory Affairs (OIRA) issued a memorandum to Federal agencies outlining how to implement, E.O. 13891.[4]

Consistent with E.O. 13891 and OMB's implementing memorandum, this action proposes the EPA's procedures for developing and issuing guidance documents and to establish a petition process for public requests to modify or withdraw an active guidance document. The purpose is to ensure that the EPA's guidance documents are:

- Developed with appropriate review;
- Accessible and transparent to the public; and,
- Provided for public participation in the development of significant guidance documents.

Implementing these procedures will lead to enhanced transparency and help to ensure that guidance documents are not improperly treated as legally binding requirements by the EPA or by

[1] Authority of EPA to Hold Employees Liable for Negligent Loss, Damage, or Destruction of Government Personal Property, 32 O.L.C. 79, 2008 WL 4422366 at * 4 (May 28, 2008) (''OLC Opinion'')

[2] See section 4(a) of Executive Order 13891 (October 15, 2019; 84 FR 55237).

[3] See section 1 of Executive Order 13891 (84 FR 55235).

[4] Guidance Implementing Executive Order 13891, Dominic J. Mancini, Acting Director, OIRA, October 31, 2019, (M–20–02).

the regulated community. Moreover, the proposed regulation includes a definition of ''guidance document'' to provide greater clarity to the public regarding the scope of the proposed regulation.

Specifically, consistent with the E.O., this regulation provides that the EPA will use an online portal to clearly identify EPA guidance documents for the public and proposes to establish: Definitions of ''guidance document'' and ''significant guidance document,'' standard elements for such guidance documents and significant guidance documents, procedures for the EPA to enable the public to comment on proposed significant guidance documents, and procedures for the public to request that an active guidance document be modified or withdrawn. The EPA intends that this regulation be interpreted and implemented in a manner that, consistent with the goals of improving the Agency's accountability and the transparency of the EPA's guidance documents, provides appropriate flexibility for the EPA to take those actions necessary to accomplish its mission.

III. Guidance Document Procedures

This rule proposes to establish the EPA's internal policies and procedures for the issuance of future guidance documents pursuant to the directives included in E.O. 13891 as well as codify the requirement that the Agency maintain an internet portal with all active and effective guidance of the Agency. The procedures contained in this proposed rule would apply to guidance documents issued by the EPA that are subject to the requirements of E.O. 13891 but not excluded under Section 4(b) of the E.O., as described in Unit III.A below. Section 4(b) of the E.O. directs the Administrator of OIRA to issue memoranda establishing exceptions from the E.O. for categories of guidance documents, as appropriate. Categorical exceptions may include documents that generally are only routine or ministerial, or that are otherwise of limited importance to the public. The EPA is proposing that the procedures established in this rule would not apply to guidance documents excepted from the requirements of E.O. 13891 under Section 4(b) of the E.O.

A. Definition of Guidance Document and Significant Guidance Document (Proposed 40 CFR 2.503)

Consistent with the definitions in E.O. 13891 and OMB's implementing memorandum, the EPA is proposing the following definitions of the terms ''guidance document'' and ''significant guidance document.''

1. Guidance Document. For the purposes of this rule, ''guidance document'' would mean an Agency statement of general applicability, intended to have future effect on the behavior of regulated parties, that sets forth a policy on a statutory, regulatory, or technical issue, or an interpretation of a statute or regulation. The definition is subject to the following exclusions:

- Rules promulgated pursuant to notice and comment under 5 U.S.C. 553, or similar statutory provisions;
- Rules exempt from rulemaking requirements under section 5 U.S.C. 553(a);[5]
- Rules of Agency organization, procedure, or practice;
- Decisions of Agency adjudications under 5 U.S.C. 554, or similar statutory provisions;
- Internal guidance directed to the EPA or its components or other agencies that is not intended to have substantial future effect on the behavior of regulated parties;
- Agency statements of specific, rather than general, applicability. The definition of ''guidance document'' would not apply to advisory or legal opinions directed to particular parties about circumstance-specific questions; notices regarding particular locations or facilities; and correspondence with individual persons or entities about particular matters, including congressional correspondence or notices of violation;
- Agency statements that do not set forth a policy on a statutory, regulatory, or technical issue or an interpretation of a statute or regulation. This would exclude from the definition of ''guidance document'' Agency statements that merely communicate news updates about the Agency, such as most speeches and press releases as well as Agency statements of general applicability concerning participation in the EPA's voluntary programs;
- Internal executive branch legal advice or legal opinions addressed to executive branch officials or courts, including legal opinions by the Office of General Counsel;
- Legal briefs and other court filings, because these are intended to persuade a court rather than affect the conduct of regulated parties;
- Grant solicitations and awards; or
- Contract solicitations and awards.

2. Significant Guidance Document. For the purposes of this rule, ''significant guidance document'' would mean a guidance document determined to be significant pursuant to E.O. 12866 and E.O. 13891.

Section 2(c) of E.O. 13891 defines ''significant guidance document'' to mean a guidance document that may reasonably be anticipated to: (i) Lead to an annual effect on the economy of $100 million or more or adversely affect in a material way the economy, a sector of the economy, productivity, competition, jobs, the environment, public health or safety, or State, local, or tribal governments or communities; (ii) Create a serious inconsistency or otherwise interfere with an action taken or planned by another agency; (iii) Materially alter the budgetary impact of entitlements, grants, user fees, or loan programs or the rights and obligations of recipients thereof; or, (iv) Raise novel legal or policy issues arising out of legal mandates, the President's priorities, or the principles of E.O. 12866.[6]

B. Inventory of Active Guidance Documents (Proposed 40 CFR 2.504)

Section 3(a) of E.O. 13891 directs agencies to establish and maintain a website guidance portal that contains or links to guidance documents that are ''active'', *i.e.,* those guidance documents under this rule that the EPA expects to cite, use, or rely upon. The EPA Guidance Portal was made publicly available on February 28, 2020 (*https://www.EPA.gov/guidance*).[7] The E.O. requires that all active guidance documents issued by an agency be included on the agency's guidance portal and that any guidance document excluded from the portal does not represent the final guidance of the agency and will have no effect.

The EPA is providing here a description of the information that is currently available on the EPA Guidance Portal. The EPA Guidance Portal following information for each guidance document:

- A concise name for the guidance document;
- The date on which the guidance document was issued;
- The date on which the guidance document was posted to the Guidance Portal;
- An EPA unique identifier;
- A hyperlink to the guidance document and any supporting or ancillary documents;

[5] 5 U.S.C. 553(a) applies, except to the extent that there is involved: (1) A military or foreign affairs function of the United States; or (2) a matter relating to agency management or personnel or to public property, loans, grants, benefits, or contracts.

[6] See section 2(c) of Executive Order 13891 (84 FR 55236).

[7] ''Notice of Public Guidance Portal,'' (85 FR 11986, February 28, 2020).

• The general topic, program, and/or statute addressed by the guidance document; and

• A brief summary of the guidance document's content.

In addition to the information associated with each guidance document, the EPA Guidance Portal includes a clearly visible note expressing that (a) guidance documents lack the force and effect of law, unless authorized by statute or incorporated into a contract; and (b) the Agency may not cite, use, or rely on any guidance document as defined in this rule, that is not posted on the EPA Guidance Portal, except to establish historical facts. The EPA Guidance Portal will also include a link to these EPA procedural regulations for guidance documents once issued as final regulations, as well as to any future proposed or final amendments.[8]

C. General Requirements and Procedures for Issuance of All Guidance Documents (Proposed 40 CFR 2.505)

Consistent with E.O. 13891, the EPA proposes to require certain standard elements for all guidance documents issued after this rule is finalized. Specifically, the EPA is proposing to require that each guidance document would satisfy the following:[9]

• Include the term ''guidance;''

• Identify the office issuing the document;

• Provide the title of the guidance;

• Provide the unique document identification number;

• Include the date of issuance;

• When practicable, identify the general activities to which and the persons to whom the document applies;

• Include the citation to the statutory provision (including the U.S.C. citation) or regulation (in CFR format) to which the guidance document applies or which it interprets;

• Note if the guidance document is a revision to a previously issued guidance document and, if so, identify the guidance document that it modifies or replaces;

• Include a short summary of the subject matter covered in the guidance document at the beginning of the document; and

• Include a disclaimer stating that the contents of the guidance document do not have the force and effect of law and that the Agency does not intend to bind the public in any way and intends only to provide clarity to the public regarding existing requirements under the law or Agency policies. If the guidance document is binding because it is authorized by law or because the guidance is incorporated into a contract, the EPA will make that clear in the document.[10]

Consistent with the requirements of E.O. 13891 and OMB's implementing memorandum, each new guidance document will be posted in the EPA Guidance Portal upon issuance.[11] When a new guidance document has been issued, or an active guidance document has been modified, or an active guidance document has been withdrawn, the EPA proposes to inform the public via the EPA Guidance Portal or other Agency website. The EPA solicits comment on the most effective means to inform the public that a new guidance document has been issued, an active guidance document has been modified, or an active guidance document has been withdrawn. Note that specific procedures for announcing new, modified, or withdrawn significant guidance documents are discussed in Unit III.D. of this document.

Given their legally nonbinding nature, guidance documents will avoid including mandatory language such as ''shall,'' ''must,'' ''required'' or ''requirement,'' unless these words are used to describe a statutory or regulatory requirement, or the language is addressed to EPA staff and will not foreclose consideration by the EPA of positions advanced by affected private parties. For example, a guidance document may explain how the EPA believes a statute or regulation applies to certain regulated entities or activities. As a practical matter, the EPA also may describe laws of nature, scientific principles, and technical requirements in mandatory terms so long as it is clear that the guidance document itself does not impose legally enforceable rights or obligations.[12]

Before issuing a new guidance document covered by this rule that is developed by an EPA Regional Office, the EPA is proposing that the EPA Regional Office must receive concurrence from the corresponding Presidentially-appointed EPA official (*i.e.,* the relevant Assistant Administrator or an official who is serving in the acting capacity) at EPA headquarters who is responsible for administering the national program to which the guidance document pertains.

The EPA will seek significance determinations from OIRA for certain guidance documents, as appropriate, in the same manner as for rulemakings.

D. Requirements for Issuance of Significant Guidance Documents (Proposed 40 CFR 2.506)

In addition to all the requirements described in Unit III.C., and consistent with the requirements of E.O. 13891, the EPA is proposing specific requirements for significant guidance documents.

The EPA does not intend to supersede non-conflicting internal policy and procedures that the EPA established for significant guidance documents in 2007 as part of its implementation of the OMB Bulletin for Agency Good Guidance Practices.[13] Specifically, the EPA is proposing the following additional requirements for significant guidance documents.

1. Notice and Public Comment Opportunities. This proposed rule would establish a public review and comment opportunity for all significant guidance documents, whether that document is new or a modification or withdrawal of an active guidance document. The EPA is proposing to generally require the EPA to publish a Notice in the **Federal Register** to announce the availability of a new draft significant guidance document and provide a 30-day public comment opportunity prior to issuing the final significant guidance document. It also proposes to require the EPA to similarly publish a Notice in the **Federal Register** announcing the proposed modification or withdrawal of an active significant guidance document and provide a 30-day public comment opportunity before finalizing the modification or withdrawal of such a document. In addition to the published announcement of the availability of the draft significant guidance document, the draft significant guidance document itself (including a link to any supporting documents) would be posted on the EPA's website concurrently and labeled appropriately.[14] To ensure comments will be received and responded to by the EPA, public comments on draft significant guidance documents and draft modifications or withdrawals of

[8] See Q12 in Guidance Implementing Executive Order 13891, Dominic J. Mancini, Acting Director, OIRA, October 31, 2019 (M–20–02).

[9] See Q22 in Guidance Implementing Executive Order 13891, Dominic J. Mancini, Acting Director, OIRA, October 31, 2019, (M–20–02).

[10] See Q20 in Guidance Implementing Executive Order 13891, Dominic J. Mancini, Acting Director, OIRA, October 31, 2019, (M–20–02).

[11] See section 3(b) of Executive Order 13891 (84 FR 55236). See Q9–Q12 in Guidance Implementing Executive Order 13891, Dominic J. Mancini, Acting Director, OIRA, October 31, 2019, (M–20–02).

[12] Final Bulletin for Agency Good Guidance Practices (72 FR 3432, 3436).

[13] Final Bulletin for Agency Good Guidance Practices (72 FR 3432).

[14] See section 4(a)(iii)(A) of Executive Order 13891 (84 FR 55237), and Q23 in Guidance Implementing Executive Order 13891, Dominic J. Mancini, Acting Director, OIRA, October 31, 2019, (M–20–02).

significant active guidance documents should be submitted using the methods specified in the Notice in the **Federal Register** announcing the availability of the draft significant guidance document or its withdrawal.

All comments received on a draft significant guidance document, or draft modification or withdrawal of an active significant guidance document, would be made available to the public either through the Federal eRulemaking Portal (*i.e., https://www.regulations.gov/*) or on the EPA website.

2. Finalizing significant guidance documents. The EPA is proposing to publish a Notice in the **Federal Register** announcing when the issuance of a new or modified active significant guidance document or withdrawal of an active significant guidance document is finalized.

The proposed regulations would also require the EPA, when issuing a final new significant guidance document or a final modification or withdrawal of an active significant guidance document, to respond to major public comments and identify in the required Notice in the **Federal Register** how the public may access the comments received and the Agency's response.

The EPA solicits comment on whether the issuance of a modification to an active significant guidance document or the withdrawal of an active significant guidance document should be announced via the **Federal Register** and subject to a 30-day public comment period, or if other means of public engagement, such as the EPA's Guidance Portal or other Agency website, could be used to announce such actions.

3. Procedural exceptions. The EPA proposes limited exceptions to the significant guidance document notice and comment process. The EPA would not seek or respond to public comment before it implements a significant guidance document (or any other category of guidance document) if exigent circumstances, as determined by the Administrator, (*e.g.,* a public health, safety, environment or other emergency) make it impracticable to delay issuance of the guidance document, or there is a statutory or judicial requirement that compels the EPA to immediately issue the document.[15] Further, the EPA would not seek or respond to public comment when it finds good cause that notice and public comment is impracticable, unnecessary, or contrary to public interest. The EPA would present the good cause finding in the guidance document or notice of availability in the **Federal Register.**

4. Required approval. The EPA Administrator or other Presidentially-appointed EPA official, or an official who is serving in an acting capacity of either of the foregoing, would approve each significant guidance document before it is issued and posted on the EPA Guidance Portal.[16]

5. Compliance with other applicable requirements. Section 5 of E.O. 13891 specifies that significant guidance documents must demonstrate compliance with the requirements of E.O. 12866, ''Regulatory Planning and Review;'' E.O. 13563, ''Improving Regulation and Regulatory Review;'' and E.O. 13609, ''Promoting International Regulatory Cooperation,'' consistent with the requirements of section 4 of E.O. 13891. E.O. 13891 directs that significant guidance documents must comply with the applicable requirements for regulations or rules, including significant regulatory actions, set forth in these executive orders.

Accordingly, the EPA would comply with the requirements of Executive Orders 12866, 13563, 13609, and 13891 when issuing significant guidance documents. For example, the EPA would assess the potential impacts of the significant guidance document if those effects may reasonably be anticipated to lead to an annual effect on the economy of $100 million.[17] The analysis (Regulatory Impact Analysis (RIA) or Economic Analysis (EA)) would focus on how that economically significant guidance document affects the incentives of regulated parties and would conform to OMB Circular A–4 on Regulatory Analysis and EPA Guidelines for Preparing Economic Analyses.[18] The EPA has not historically issued economically significant guidance documents (*i.e.,* those that lead to an annual effect on the economy of $100 million or more).

E. Procedures for Public To Petition for Modification or Withdrawal (Proposed 40 CFR 2.507)

Consistent with E.O. 13891, the EPA is proposing procedures to allow the public to petition the EPA for the modification or withdrawal of an active guidance document posted on the EPA Guidance Portal. The EPA Guidance Portal will provide clear and specific instructions to the public regarding how to request the modification or withdrawal of an active guidance document. The EPA is proposing that the public may submit petitions using one of the two following methods described on the EPA Guidance Portal: (1) An electronic submission through the EPA's designated submission system identified on the EPA Guidance Portal (*i.e.,* using a link labeled ''Submit a petition for Agency modification or withdrawal of guidance documents''), or, (2) a paper submission to the EPA's designated mailing address listed on the EPA Guidance Portal.

1. Format and content elements for public petitions. The EPA is proposing the following formatting elements for petitions:

- The petitioner's name and a means for the EPA to contact the petitioner such as an email address or mailing address, in addition to any other contact information (such as telephone number) that the petitioner chooses to include; and
- A heading, preceding its text that states, either ''Petition to Modify a Guidance Document'' or ''Petition to Withdraw a Guidance Document.''

The EPA is proposing that a petition should include the following content elements:

- Identification of the specific title and the EPA unique identifier of the guidance document that the petitioner is requesting be modified or withdrawn;
- The nature of the relief sought (*i.e.,* modification or withdrawal);
- An explanation of the interest of the petitioner in the requested action;
- If practicable, specification of the text that the petitioner request be modified or withdrawn, and, where possible, suggested text for the Agency to consider; and
- A rationale for the requested modification or withdrawal.

Although the EPA may be able to consider incomplete petitions, petitions that omit the specified information may impede the EPA from fully evaluating the merits of the requested action. The EPA is proposing that a petition that is not submitted using one of the two methods described above (as well as on the EPA Guidance Portal), but that includes the required formatting and content elements, will be treated as a properly filed petition, received as of the time it is discovered and identified. The EPA notes that if a document does not include all of the format and content

[15] See section 4(a)(iii)(A) of Executive Order 13891 (84 FR 55237) and Final Bulletin for Agency Good Guidance Practices. (72 FR 3432; 3438–3439).

[16] See section 4(a)(iii)(B) of Executive Order 13891 (84 FR 55237) and, Q25 in Guidance Implementing Executive Order 13891, Dominic J. Mancini, Acting Director, OIRA, October 31, 2019, (M–20–02).

[17] See Q5 in Guidance Implementing Executive Order 13891, Dominic J. Mancini, Acting Director, OIRA, October 31, 2019, (M–20–02).

[18] EPA Guidelines for Preparing Economic Analyses. December 17, 2010 (updated May 2014). Accessible at *https://www.epa.gov/sites/production/files/2017-08/documents/ee-0568-50.pdf.*

elements described above, the EPA may be unable to identify the document as a petition for modification or withdrawal of a guidance document. These will instead be treated according to the existing correspondence or other appropriate procedures of the EPA, and any suggestions contained in it will be considered at the discretion of the Administrator.

The EPA solicits comment on whether the procedural rule should specify any other information elements that should be addressed in a petition to modify or withdraw an active guidance document. The EPA requests that any such comments explain how additional information elements would enable the Agency to correctly identify and more completely evaluate a petition.

2. Required EPA response to public petitions. The EPA would respond to petitions in a timely manner, but no later than 90 calendar days after receipt of the petition. If the EPA requires more than 90 calendar days to consider a petition, the EPA would inform the petitioner that more time is required and indicate the reason why and provide an estimated decision date. The EPA will only extend the response date one time for a period not to exceed 90 calendar days before providing a response.

It is important to note that the response and the set timeframes for responding to the petition are not intended to capture the implementation of the response. For example, if the Agency agrees with a petitioner seeking a modification to a guidance document, the Agency will pursue the modification in accordance with applicable procedures. In such cases, the Agency intends for the response to the petition to include its approach for completing the modification of that guidance document.

Duplicative petitions and petitions submitted as part of a mass petitioning effort may be responded to in a single response to ensure an efficient and consistent response to the petitions. Petitions that request a change to the underlying statute or promulgated rules, rather than specific text in the guidance document, will not be considered valid petitions under this process because they are not petitions to modify or withdraw a guidance document.

The EPA requests comment on whether the Agency should create unified public petition procedures, similar to those proposed in this rule for guidance documents, for EPA rulemakings in addition to the public petition right established in APA section 553(e).[19]

IV. Statutory and Executive Orders Reviews

Additional information about these statues and Executive orders can be found at *https://www.epa.gov/laws-regulations/laws-and-executive-orders.*

A. Executive Order 12866: Regulatory Planning and Review and Executive Order 13563: Improving Regulation and Regulatory Review

This action is not a significant regulatory action and was therefore not submitted to OMB for review under Executive Orders 12866. The EPA does not anticipate that this rulemaking will have an economic impact on regulated entities. This is a rule of agency procedure and practice. The EPA expects the benefits of this rule to be improved transparency and management of the EPA's guidance documents.

B. Executive Order 13771: Reducing Regulations and Controlling Regulatory Costs

This action is not expected to be an Executive Order 13771 regulatory action because it relates to ''agency organization, management or personnel.''

C. Paperwork Reduction Act (PRA)

This action does not contain any information collection activities and therefore does not impose an information collection burden under the PRA.

D. Regulatory Flexibility Act (RFA)

I certify that this action will not have a significant economic impact on a substantial number of small entities under the RFA. This is a rule of agency procedure and practice. The EPA expects the benefits of this rule to be improved transparency and management of the EPA's guidance documents.

E. Unfunded Mandates Reform Act (UMRA)

This action does not contain any unfunded mandate as described in UMRA, 2 U.S.C. 1531–1538, and does not significantly or uniquely affect small governments. The action imposes no enforceable duty on any state, local, or tribal governments or the private sector.

F. Executive Order 13132: Federalism

This action does not have federalism implications. It will not have substantial direct effects on the states, on the relationship between the National Government and the states, or on the distribution of power and responsibilities among the various levels of government.

G. Executive Order 13175: Consultation and Coordination With Indian Tribal Governments

This action does not have tribal implications as specified in Executive Order 13175. Thus, Executive Order 13175 does not apply to this action.

H. Executive Order 13045: Protection of Children From Environmental Health Risks and Safety Risks

The EPA interprets Executive Order 13045 as applying only to those regulatory actions that concern environmental health or safety risks that the EPA has reason to believe may disproportionately affect children. Per the definition of ''covered regulatory action'' in section 2–202 of Executive Order 13891 and because this action does not concern an environmental health risk or safety risk, it is not subject to Executive Order 13045.

I. Executive Order 13211: Actions Concerning Regulations That Significantly Affect Energy Supply, Distribution or Use

This action is not subject to Executive Order 13211, because it is not a significant regulatory action under Executive Order 12866.

J. National Technology Transfer and Advancement Act (NTTAA)

This rulemaking does not involve technical standards.

K. Executive Order 12898: Federal Actions To Address Environmental Justice in Minority Populations and Low-Income Populations

The EPA believes that this action is not subject to Executive Order 12898 (59 FR 7629, February 16, 1994) because it does not establish an environmental health or safety standard.

List of Subjects in 40 CFR Part 2

Environmental protection, Administrative practice and procedure, Organization and functions (Government agencies).

Andrew Wheeler,

Administrator.

For the reasons set forth in the preamble, the Environmental Protection Agency proposes to amend 40 CFR part 2 as follows:

[19] (Pub. L. 89–554, Sept. 6, 1966, 80 Stat. 383.)

PART 2—PUBLIC INFORMATION

■ 1. The authority citation for part 2 continues to read as follows:

Authority: 5 U.S.C. 301, 552, 552a, 553; 28 U.S.C. 509, 510, 534; 31 U.S.C. 3717.

■ 2. Add subpart D to read as follows:

Subpart D—Guidance Procedures

Sec.
2.501 General.
2.502 Scope.
2.503 Definitions.
2.504 Public access to active guidance documents.
2.505 Guidance document general requirements and procedures.
2.506 Significant guidance document requirements and procedures.
2.507 Procedures for the public to petition for modification or withdrawal.

§ 2.5012.501 General.

This subpart establishes procedures for the issuance of EPA guidance documents subject to Executive Order 13891, ''Promoting the Rule of Law Through Improved Agency Guidance Documents'' (October 15, 2019). This subpart also establishes procedures for the public to petition for modification or withdrawal of such guidance documents.

§ 2.502 Scope.

(a) The procedures in this subpart do not apply to guidance documents excepted from the requirements of Executive Order 13891 under Section 4(b) of the Executive order or that are not otherwise subject to Executive Order 13891.

(b) Subject to the qualifications and exemptions contained in this subpart, the procedures in this subpart apply to all active guidance documents as defined in this subpart, issued by all components of the Environmental Protection Agency (EPA) after [date of issuance for the final rule].

(c) Rescinded guidance documents are not active guidance documents pursuant to Executive Order 13891 and may only be used to establish historical facts.

(d) This subpart is intended to improve the internal management of the EPA. As such, it is for the use of EPA personnel only and is not intended to, and does not, create any right or benefit, substantive or procedural, enforceable at law or in equity by any party against the United States, its agencies or other entities, its officers or employees, or any other person.

(e) If Executive Order 13891, or any provision thereof, is rescinded or superseded, this subpart remains in force.

(f) The Agency may deviate from the procedures in this subpart, when necessary, at the written direction of the Administrator. The decision to deviate from the procedures in this subpart is in the Administrator's sole and unreviewable discretion.

§ 2.503 Definitions.

For the purposes of this subpart, the following definitions apply:

Guidance document means an Agency statement of general applicability, intended to have future effect on the behavior of regulated parties, that sets forth a policy on a statutory, regulatory, or technical issue, or an interpretation of a statute or regulation, subject to the following exclusions:

(1) Rules promulgated pursuant to notice and comment under 5 U.S.C. 553, or similar statutory provisions;

(2) Rules exempt from rulemaking requirements under 5 U.S.C. 553(a);

(3) Rules of Agency organization, procedure, or practice;

(4) Decisions of Agency adjudications under 5 U.S.C. 554, or similar statutory provisions;

(5) Internal guidance directed to the EPA or its components or other agencies that is not intended to have substantial future effect on the behavior of regulated parties;

(6) Internal executive branch legal advice or legal opinions addressed to executive branch officials or courts, including legal opinions by the Office of General Counsel;

(7) Agency statements of specific, rather than general, applicability. This would exclude from the definition of ''guidance'' advisory or legal opinions directed to particular parties about circumstance-specific questions; notices regarding particular locations or facilities; and correspondence with individual persons or entities about particular matters, including congressional correspondence or notices of violation unless a document is directed to a particular party but designed to guide the conduct of the broader regulated public;

(8) Agency statements that do not set forth a policy on a statutory, regulatory, or technical issue or an interpretation of a statute or regulation, including news updates like speeches and press releases, as well as statements of general applicability concerning participation in the EPA's voluntary programs;

(9) Legal briefs and other court filings;

(10) Grant solicitations and awards; or

(11) Contract solicitations and awards.

Significant guidance document means a guidance document that is determined to be ''significant'' pursuant to Executive Order 12866 and Executive Order 13891.

§ 2.504 Public access to active guidance documents.

All active guidance documents shall appear on the EPA Guidance Portal on the EPA website.

§ 2.505 Guidance document general requirements and procedures.

(a) *Minimum guidance requirements.* In each guidance document, the EPA will:

(1) Include the term ''guidance'';

(2) Identify the component office issuing the document;

(3) Provide the title of the guidance and the document identification number;

(4) Include the date of issuance;

(5) When practicable, identify the general activities to which and the persons to whom the document applies;

(6) Include the citation to the statutory provision (including the U.S.C. citation) or regulation (to the CFR) to which the guidance document applies or which it interprets;

(7) Note if the guidance document is a revision to a previously issued guidance document and, if so, identify the guidance document that it modifies or replaces;

(8) Include a short summary of the subject matter covered in the guidance document at the beginning of the document; and

(9) Include a disclaimer stating that the contents of the guidance document do not have the force and effect of law and that the Agency does not bind the public in any way and intends only to provide clarity to the public regarding existing requirements under the law or Agency policies, except as authorized by law or as incorporated into a contract. When a guidance document is binding because binding guidance is authorized by law or because the guidance is incorporated into a contract, the statement will reflect that.

(b) *Approval.* A guidance document issued by an EPA Regional Office must receive concurrence from the corresponding Presidentially-appointed EPA official (*i.e.,* the relevant Assistant Administrator or an official who is serving in the acting capacity) at EPA headquarters who is responsible for administering the national program to which the guidance document pertains.

(c) *Avoid mandatory language.* A guidance document will avoid mandatory language such as ''shall,'' ''must,'' ''required'' or ''requirement,'' unless using these words to describe a statutory or regulatory requirement, or the language is addressed to EPA staff and will not foreclose consideration by the EPA of positions advanced by affected private parties.

(d) *Significance determinations.* The EPA will seek significance determinations from the Office of Information and Regulatory Affairs (OIRA) for certain guidance documents, as appropriate, in the same manner as for rulemakings.

§ 2.506 Significant guidance document requirements and procedures.

A significant guidance document will adhere to all the requirements described in § 2.505 and the requirements in this section.

(a) *Draft for public comment.* (1) The EPA will make available a draft significant guidance document, or draft modification or withdrawal of a significant active guidance document, for public comment before finalizing any significant guidance document. The EPA will post appropriately labeled draft guidance and any supporting documents on the EPA's website.

(2) The EPA will publish a notice in the **Federal Register** announcing the availability of a draft significant guidance document, or draft modification or withdrawal of a significant active guidance document, to open the public comment period.

(b) *Public comment process.* (1) Except as provided in paragraph (c) of this section, a draft significant guidance document, or a draft modification or withdrawal of a significant active guidance document, will have a minimum of 30 days public notice and comment before issuance of a final guidance document or issuance of the final modification or withdrawal of an active guidance document. Public comments shall be available to the public online, either in a docket or on the EPA website.

(2) The EPA shall respond to major concerns and comments in the final guidance document itself or in a companion document.

(c) *Exceptions to comment process.* The EPA will not seek or respond to public comment before the EPA implements a significant guidance document if at the sole discretion of the Administrator:

(1) Doing so is not feasible or appropriate because immediate issuance is required by a public health, safety, environmental, or other emergency requiring immediate issuance of the guidance document or a statutory requirement or court order that requires immediate issuance; or

(2) When the Agency for good cause finds (and incorporates such finding and a brief statement of reasons therefor into the guidance document) that notice and public comment thereon are impracticable, unnecessary, or contrary to the public interest.

(d) *Additional notices.* The EPA also will publish a notice in the **Federal Register** when it finalizes a significant guidance document or finalizes a modification or withdrawal of a significant active guidance document.

(e) *Approval.* The EPA Administrator or other Presidentially-appointed EPA official, or an official who is serving in the acting capacity of either of the foregoing, will approve a significant guidance document prior to its issuance and posting in the EPA Guidance Portal website.

(f) *Executive order compliance.* A significant guidance document shall comply with the requirements of Executive Orders 12866, 13563, 13609, 13771, 13777, and 13891.

§ 2.507 Procedures for the public to petition for modification or withdrawal.

(a) *Submission of a petition.* The public may submit a petition to the EPA for the modification or withdrawal of an active guidance document.

(b) *Petition methods.* A petitioner should only submit a petition to the EPA using one of the two methods in paragraphs (b)(1) and (2) of this section and not submit additional copies by any other method. A petition should be submitted through:

(1) An electronic submission through the EPA's designated submission system identified on the EPA Guidance Portal website; or

(2) A paper submission to the EPA's designated mailing address listed on the EPA Guidance Portal website.

(c) *Petition format.* A petition under this section should include:

(1) The petitioner's name and a means for the EPA to contact the petitioner such as an email address or mailing address, in addition to any other contact information (such as telephone number) that the petitioner chooses to include; and

(2) A heading, preceding its text that states, ''Petition to Modify a Guidance Document'' or ''Petition to Withdraw a Guidance Document.''

(d) *Petition content.* A petition for modification or withdrawal of an active guidance document should include the following elements:

(1) Identification of the specific title and the EPA unique identifier of the guidance document that the petitioner is requesting be modified or withdrawn;

(2) The nature of the relief sought (*i.e.,* modification or withdrawal);

(3) An explanation of the interest of the petitioner in the requested action (*i.e.,* modification or withdrawal);

(4) If practicable, specification of the text that the petitioner request be modified or withdrawn, and, where possible, suggested text for the Agency to consider; and

(5) A rationale for the requested modification or withdrawal.

(e) *Petition handling.* Failure to follow one of the submission methods described in paragraph (b) of this section and to include in a petition the elements in paragraphs (c) and (d) of this section may create delays in processing time and may result in the EPA being unable to evaluate the merits of the petition.

(1) The EPA may treat a petition that is not submitted as specified in paragraph (b) of this section, but that meets the other elements of this section, as a properly filed petition and received as of the time it is discovered and identified.

(2) The EPA may treat a document that fails to conform to one or more of the elements of paragraphs (c) and (d) of this section as if it is not a petition under this section. The EPA may treat such a document according to the existing correspondence or other appropriate procedures of the EPA, and any suggestions contained in it will be considered at the discretion of the Administrator.

(f) *Petition response timing.* (1) The EPA should respond to a petition in a timely manner, but no later than 90 calendar days after receipt of the petition.

(2) If, for any reason, the EPA needs more than 90 calendar days to respond to a petition, the EPA will inform the petitioner that more time is needed and indicate the reason why and an estimated response date. The EPA will only extend the response date one time not to exceed 90 calendar days before providing a response.

(g) *Petition response.* (1) The EPA may provide a single response to issues raised by duplicative petitions and petitions submitted as part of a mass petitioning effort.

(2) In order to be considered a valid petition under this section, the petition must address a specific issue in the guidance document in question and not merely underlying statutory or regulatory text.

[FR Doc. 2020–11079 Filed 5–21–20; 8:45 am]

BILLING CODE 6560–50–P

ENVIRONMENTAL PROTECTION AGENCY

40 CFR Part 52

[EPA–R04–OAR–2020–0072; FRL–10009–55–Region 4]

Air Plan Approval; GA: Emission Reduction Credits

AGENCY: Environmental Protection Agency (EPA).

ACTION: Proposed rule.

SUMMARY: The Environmental Protection Agency (EPA) is proposing to approve a State Implementation Plan (SIP) revision submitted by the State of Georgia through a letter dated October 18, 2019, updating Georgia's rule titled *Emission Reduction Credits* which establishes a program for sources in specified counties to apply for credits for voluntary emissions reductions. EPA has evaluated Georgia's submittal and preliminarily determined that it meets the applicable requirements of the Clean Air Act (CAA or Act) and EPA regulations.

DATES: Comments must be received on or before June 22, 2020.

ADDRESSES: Submit your comments, identified by Docket ID No. EPA–R04–OAR–2020–0072 at *www.regulations.gov.* Follow the online instructions for submitting comments. Once submitted, comments cannot be edited or removed from *Regulations.gov.* EPA may publish any comment received to its public docket. Do not submit electronically any information you consider to be Confidential Business Information (CBI) or other information whose disclosure is restricted by statute. Multimedia submissions (audio, video, etc.) must be accompanied by a written comment. The written comment is considered the official comment and should include discussion of all points you wish to make. EPA will generally not consider comments or comment contents located outside of the primary submission (*i.e.,* on the web, cloud, or other file sharing system). For additional submission methods, the full EPA public comment policy, information about CBI or multimedia submissions, and general guidance on making effective comments, please visit *www2.epa.gov/dockets/commenting-epa-dockets.*

FOR FURTHER INFORMATION CONTACT: Pearlene Williams, Air Regulatory Management Section, Air Planning and Implementation Branch, Air and Radiation Division, U.S. Environmental Protection Agency, Region 4, 61 Forsyth Street SW, Atlanta, Georgia 30303–8960. Ms. Williams can be reached via telephone at (404) 562–9144 or via electronic mail at *williams.pearlene@epa.gov.*

SUPPLEMENTARY INFORMATION:

I. Background

EPA is proposing to approve a revision to the Georgia SIP submitted through a letter dated October 18, 2019,[1] modifying Rule 391–3–1–.03(13), *Emission Reduction Credits,*[2] in the State's air permitting rules. This submittal revises the counties in which sources may create emission reduction credits (ERCs). This change aligns Georgia's ERC program with the current status of counties designated nonattainment or contributing to a nonattainment area.

Georgia's SIP-approved ERC program is codified at Rule 391–3–1–.03(13). The ERC program allows eligible sources that voluntarily reduce emissions in the affected counties to certify and ''bank'' these reductions as ERCs for future use. By its terms, the ERC program only applies in counties in a nonattainment area, or counties determined by the Director of Georgia's Environmental Protection Division (GA EPD) to contribute to ambient air quality in the nonattainment area. The banked ERCs hold their value for ten years, at which point they begin devaluing ten percent per year until they have reached 50 percent of their original value. The ERC program is intended to help the Atlanta area achieve compliance with federal standards for ground-level ozone. The program does not allow for any increase in emissions of oxides of nitrogen (NO_X) or volatile organic compounds (VOC) in the area to which it is applicable.

The current SIP-approved Rule 391–3–1–.03(13), at subparagraph (a)1., allows sources within 13 counties that have the potential to emit (PTE) 25 tons per year (tpy) of either NO_X or VOCs to participate in the ERC program. These counties correspond to the prior nonattainment area for the 1979 1-hour ozone National Ambient Air Quality Standard (NAAQS). Georgia Rule 391–3–1–.03(13)(a)2. provides that sources within seven counties that have the potential to emit 100 tpy of either NO_X or VOCs may participate in the program. These seven counties were included in the nonattainment area for the 1997 8-hour ozone NAAQS. Finally, Georgia Rule 391–3–1–.03(13)(a)3. provides that electrical generating units (EGU) within 25 counties that have the potential to emit 100 tons per year of either NO_X or VOCs may participate in the ERC program. These counties were determined by the Director of GA EPD to contribute to ozone ambient air concentrations in nonattainment areas.

EPA redesignated all nonattainment counties in Georgia to attainment for the 1979 1-hour ozone NAAQS on June 15, 2005,[3] and has since revoked the 1-hour ozone NAAQS.[4] EPA redesignated all nonattainment counties in Georgia to attainment for the 1997 8-hour ozone NAAQS on June 23, 2011. *See* 76 FR 36873. Additionally, EPA redesignated all nonattainment counties in Georgia to attainment for the 2008 8-hour ozone NAAQS on June 2, 2017. *See* 82 FR 25523. On June 4, 2018, EPA designated seven counties surrounding Atlanta as nonattainment and classified them as a ''marginal'' nonattainment area for the 2015 8-hour ozone NAAQS (hereinafter referred to as the Atlanta 2015 8-hour Ozone Area).[5] *See* 83 FR 25776. This area is the only nonattainment area in the State.

Georgia's October 18, 2019 SIP submittal revises the counties listed in Rule 391–3–1–.03(13)(a) to ensure that only sources in counties currently designated nonattainment—and counties contributing to the ambient air quality in the nonattainment area—may participate in the ERC program. The details of the submittal and EPA's rationale for proposing to approve the changes are discussed below.

II. EPA's Analysis of State's Submittal

The first revision to Georgia's ERC rule removes subparagraph 391–3–1–.03(13)(a)1., which lists 13 counties containing stationary sources with the potential to emit more than 25 tpy of NO_X or VOCs, and that are eligible to create and bank NO_X and VOC ERCs. This list corresponds to the previous Atlanta 1-hour ozone nonattainment area, which has since been redesignated to attainment.[6] Because these counties have since been redesignated to attainment for the 1979 1-hour ozone

[1] EPA notes the Agency received the submittal on October 24, 2019.

[2] EPA notes that the Agency received several submittals revising the Georgia SIP transmitted with the same October 18, 2019, cover letter. EPA will be considering action for these other SIP revisions in separate rulemakings.

[3] *See* 70 FR 34660 (June 15, 2005).

[4] The 1-hour Ozone NAAQS was revoked in the Atlanta Metro Area effective June 15, 2005. *See* 70 FR 44470 (August 3, 2005).

[5] The Atlanta 2015 8-hour Ozone Area consists of the following counties: Bartow, Clayton, Cobb, DeKalb, Fulton, Gwinnett, and Henry. The 2015 8-hour ozone NAAQS is set at 0.070 ppm based on an annual fourth-highest daily maximum 8-hour average concentration averaged over three years.

[6] This area was formerly subject to the Nonattainment New Source Review (NNSR) requirements for ''severe'' ozone nonattainment areas, which apply to sources with a potential to emit (PTE) of 25 tpy or greater for NO_X and VOCs.

NAAQS, Georgia seeks to remove subparagraph (13)(a)1. from the SIP.

Next, GA EPD revises the counties listed at subparagraph (a)2. to add the 13 counties removed from subparagraph (a)1. Sources in counties listed in this subparagraph that emit greater than 100 tpy of NO_X or VOCs may participate in the ERC program. Of these 13 added counties, six are part of the Atlanta 2015 8-hour Ozone Area. The remaining seven counties are part of the maintenance area for the 2008 8-hour ozone NAAQS. Georgia's SIP-approved rules require these counties to comply with requirements applicable to nonattainment areas. *See* Georgia Rule 391–3–1–.03(8)(c)(14). Because these 13 counties either are in a nonattainment area or must otherwise comply with GA EPD's nonattainment area requirements, EPA believes they are appropriately included in the State's ERC program at subparagraph (a)2.

Finally, subparagraph (13)(a)2. is further modified to remove the five counties that were previously part of the maintenance area for the 1997 8-hour ozone NAAQS and are not part of the maintenance area for the 2008 8-hour ozone NAAQS (*i.e.,* Barrow, Carroll, Hall, Spalding, and Rockdale counties). GA EPD adds these five counties to the list of counties determined to contribute to ambient levels of ozone within the nonattainment area at subparagraph (a)3. *See* Georgia Rules 391–3–1–.03(8)(c)15. and 391–3–1–.03(8)(e)1. The effect of this change is that EGUs with a PTE greater than 100 tpy of NO_X or VOCs in these counties are eligible to create and bank NO_X and VOC ERCs.

In sum, these revisions clarify eligibility for sources in certain counties to bank and create ERCs. These changes also make paragraph 391–3–1–.03(13)(a) consistent with current provisions under the State's Nonattainment New Source Review (NNSR) permitting program.[7] EPA also notes that the ERC program is a flexibility tool used by States and affected sources to comply with otherwise applicable requirements and is not expected to impact emissions in the State. Therefore, EPA is preliminarily concluding that these changes are consistent with the CAA and applicable EPA regulations.[8]

III. Incorporation by Reference

In this document, EPA is proposing to include in a final EPA rule regulatory text that includes incorporation by reference. In accordance with requirements of 1 CFR 51.5, EPA is proposing to incorporate by reference Georgia Rule 391–3–1–.03(13), titled ''Emission Reduction Credits,'' effective September 26, 2019, to clarify which sources in which areas of the State are eligible to create and bank emission reduction credits. EPA has made, and will continue to make, the State Implementation Plan generally available through *www.regulations.gov* and at the EPA Region 4 Office (please contact the person identified in the ''For Further Information Contact'' section of this preamble for more information).

IV. Proposed Action

EPA is proposing to approve the Georgia SIP revision with changes to Regulation 391–3–1–.03(13), *Emission Reduction Credits,* submitted October 18, 2019, to clarify which sources in which areas are eligible to create, bank, transfer, or use ERCs of NO_X and VOCs, corresponding to the counties that are either currently in nonattainment or contributing to the current nonattainment area. EPA has preliminarily concluded that the SIP revision is consistent with the CAA and EPA's federal regulations.

V. Statutory and Executive Order Reviews

Under the CAA, the Administrator is required to approve a SIP submission that complies with the provisions of the Act and applicable Federal regulations. *See* 42 U.S.C. 7410(k); 40 CFR 52.02(a). Thus, in reviewing SIP submissions, EPA's role is to approve state choices, provided that they meet the criteria of the CAA. This proposed action merely proposes to approve state law as meeting Federal requirements and does not impose additional requirements beyond those imposed by state law. For that reason, this proposed action:

- Is not a significant regulatory action subject to review by the Office of Management and Budget under Executive Orders 12866 (58 FR 51735, October 4, 1993) and 13563 (76 FR 3821, January 21, 2011);
- Is not an Executive Order 13771 (82 FR 9339, February 2, 2017) regulatory action because SIP approvals are exempted under Executive Order 12866;
- Does not impose an information collection burden under the provisions of the Paperwork Reduction Act (44 U.S.C. 3501 *et seq.*);
- Is certified as not having a significant economic impact on a substantial number of small entities under the Regulatory Flexibility Act (5 U.S.C. 601 *et seq.*);
- Does not contain any unfunded mandate or significantly or uniquely affect small governments, as described in the Unfunded Mandates Reform Act of 1995 (Pub. L. 104–4);
- Does not have Federalism implications as specified in Executive Order 13132 (64 FR 43255, August 10, 1999);
- Is not an economically significant regulatory action based on health or safety risks subject to Executive Order 13045 (62 FR 19885, April 23, 1997);
- Is not a significant regulatory action subject to Executive Order 13211 (66 FR 28355, May 22, 2001);
- Is not subject to requirements of Section 12(d) of the National Technology Transfer and Advancement Act of 1995 (15 U.S.C. 272 note) because application of those requirements would be inconsistent with the CAA; and
- Does not provide EPA with the discretionary authority to address, as appropriate, disproportionate human health or environmental effects, using practicable and legally permissible methods, under Executive Order 12898 (59 FR 7629, February 16, 1994).

The SIP is not approved to apply on any Indian reservation land or in any other area where EPA or an Indian tribe has demonstrated that a tribe has jurisdiction. In those areas of Indian country, the rule does not have tribal implications as specified by Executive Order 13175 (65 FR 67249, November 9, 2000), nor will it impose substantial direct costs on tribal governments or preempt tribal law.

List of Subjects in 40 CFR Part 52

Environmental protection, Air pollution control, Incorporation by reference, Intergovernmental relations, Nitrogen dioxide, Ozone, Volatile organic compounds.

Authority: 42 U.S.C. 7401 *et seq.*

Dated: May 12, 2020.

Mary Walker,

Regional Administrator, Region 4.

[FR Doc. 2020–10684 Filed 5–21–20; 8:45 am]

BILLING CODE 6560–50–P

ENVIRONMENTAL PROTECTION AGENCY

40 CFR Part 52

[EPA–R09–OAR–2020–0173; FRL–10009–01–Region 9]

Limited Approval, Limited Disapproval of Arizona Air Plan Revisions, Hayden Area; Sulfur Dioxide Control Measures—Copper Smelters

AGENCY: Environmental Protection Agency (EPA).

[7] *See* 85 FR 2646 (January 16, 2020)

[8] EPA has also preliminarily concluded that these changes are consistent with applicable guidance on emissions trading, including EPA's ''Emissions Trading Policy Statement; General Principles for Creation, Banking and Use of Emission Reduction Credits.'' 51 FR 43814 (Dec. 4, 1986).

ACTION: Proposed rule.

SUMMARY: The Environmental Protection Agency (EPA) is proposing a limited approval and limited disapproval of revisions to the Arizona State Implementation Plan (SIP). This revision concerns sulfur dioxide (SO_2) emissions from the primary copper smelter in Hayden, Arizona. We are proposing action on a local rule submitted by the Arizona Department of Environmental Quality (ADEQ) that regulates these emissions under the Clean Air Act (CAA or the Act). We are taking comments on this proposal and plan to follow with a final action.

DATES: Comments must be received on or before June 22, 2020.

ADDRESSES: Submit your comments, identified by Docket ID No. EPA–R09–OAR–2020–0173 at *http://www.regulations.gov.* For comments submitted at *Regulations.gov*, follow the online instructions for submitting comments. Once submitted, comments cannot be edited or removed from *Regulations.gov*. The EPA may publish any comment received to its public docket. Do not submit electronically any information you consider to be Confidential Business Information (CBI) or other information whose disclosure is restricted by statute. Multimedia submissions (audio, video, etc.) must be accompanied by a written comment. The written comment is considered the official comment and should include discussion of all points you wish to make. The EPA will generally not consider comments or comment contents located outside of the primary submission (*i.e.* on the web, cloud, or other file sharing system). For additional submission methods, please contact the person identified in the **FOR FURTHER INFORMATION CONTACT** section. For the full EPA public comment policy, information about CBI or multimedia submissions, and general guidance on making effective comments, please visit *http://www.epa.gov/dockets/commenting-epa-dockets.*

FOR FURTHER INFORMATION CONTACT: Kevin Gong, EPA Region IX, 75 Hawthorne St., San Francisco, CA 94105. By phone: (415) 972–3073 or by email at *gong.kevin@epa.gov.*

SUPPLEMENTARY INFORMATION: Throughout this document, ''we,'' ''us'' and ''our'' refer to the EPA.

Table of Contents

I. The State's Submittal
A. What rule did the State submit?
B. Are there other versions of this rule?
C. What is the purpose of the submitted rule?
II. The EPA's Evaluation and Action
A. How is the EPA evaluating the rule?
B. Does the rule meet the evaluation criteria?
C. What are the rule deficiencies?
D. EPA Recommendations To Further Improve the Rule
E. Proposed Action and Public Comment
III. Incorporation by Reference
IV. Statutory and Executive Order Reviews

I. The State's Submittal

A. What rule did the State submit?

Table 1 lists the rule addressed by this proposal with the dates that it was adopted and submitted by the ADEQ.

TABLE 1—SUBMITTED RULE

Rule #	Rule title	Effective date	Submitted
R18–2–B1302	Limits on SO_2 Emissions from the Hayden Smelter	July 1, 2018	April 6, 2017.

On July 17, 2017, the EPA determined that the submittal for the rules and documents in Table 1 met the completeness criteria in 40 CFR part 51 Appendix V, which must be met before formal EPA review.[1]

B. Are there other versions of this rule?

There are no previous versions of R18–2–B1302 (''Rule B1302'') in the SIP.

C. What is the purpose of the submitted rule?

On June 22, 2010, the EPA promulgated a new 1-hour primary sulfur dioxide (SO_2) National Ambient Air Quality Standard (NAAQS) of 75 parts per billion (ppb). On August 5, 2013, the EPA designated the Hayden area within Arizona as nonattainment for the 2010 SO_2 NAAQS. This designation became effective on October 4, 2013. Section 191(a) of the CAA directs states to submit SIPs for areas designated as nonattainment for the SO_2 NAAQS to the EPA within 18 months of the effective date of the designation, *i.e.,* by no later than April 4, 2015, in this case. Under CAA section 192(a), these plans are required to have measures that will help their respective areas attain the NAAQS as expeditiously as practicable, but no later than 5 years from the effective date of designation, which for the Hayden SO_2 NAA was October 4, 2018.

ADEQ submitted an attainment plan for the Hayden SO_2 nonattainment area on March 9, 2017 (''Hayden SO_2 Plan'') and submitted associated final rules, including Rule B1302, on April 6, 2017.[2] Rule R18–2–B1302 establishes control requirements for SO_2 emissions from the copper smelter located in the Hayden, AZ nonattainment area (''Hayden Smelter'').

II. The EPA's Evaluation and Action

A. How is the EPA evaluating the rule?

Rules in a SIP must be enforceable (see CAA section 110(a)(2)), must not interfere with applicable requirements concerning attainment and reasonable further progress or other CAA requirements (see CAA section 110(l)), and must not modify certain SIP control requirements in nonattainment areas without ensuring equivalent or greater emissions reductions (see CAA section 193). CAA section 172(c)(1) requires that SIPs for nonattainment areas provide for the implementation of all reasonably available control measures (RACM), including any reasonably available control technology (RACT), in order to provide for attainment of the NAAQS, and CAA section 172(c)(6) requires that such SIPs ''include enforceable emission limitations, and such other control measures means or techniques . . . as well as schedules and timetables for compliance, as may be necessary or appropriate to provide for attainment of such standard in such area by the applicable attainment date . . .''

Guidance and policy documents that we use to evaluate enforceability, revision and rule stringency requirements for the applicable criteria pollutants include the following:

- ''State Implementation Plans; General Preamble for the Implementation of Title I of the Clean Air Act Amendments of 1990,'' 57 FR

[1] Letter dated July 17, 2017 from Elizabeth Adams, Director, Air Division, EPA, Region IX to Timothy S. Franquist, Director, Air Quality Division, ADEQ.

[2] Letters dated March 8, 2017 and April 6, 2017 from Timothy S. Franquist, Director, Air Quality Division, ADEQ, to Alexis Strauss, Acting Regional Administrator, EPA, Region IX. Although the cover letter for the Hayden SO_2 Plan was dated March 8, 2017, the Plan was transmitted to the EPA on March 9, 2017.

13498 (April 16, 1992); 57 FR 18070 (April 28, 1992).

• ''Issues Relating to VOC Regulation Cutpoints, Deficiencies, and Deviations,'' EPA, May 25, 1988 (the Bluebook, revised January 11, 1990).

• ''Guidance Document for Correcting Common VOC & Other Rule Deficiencies,'' EPA Region 9, August 21, 2001 (the Little Bluebook).

• ''Guidance for 1-Hour SO_2 Nonattainment Area SIP Submissions,'' EPA Office of Air Quality Planning and Standards (April 23, 2014).

B. Does the rule meet the evaluation criteria?

Rule B1302 improves the SIP by establishing a more stringent SO_2 emission limit for the main stack at the Hayden smelter than the existing requirements in state law, as well as new operational standards and monitoring, recordkeeping and reporting requirements for the smelter. The rule is partly consistent with CAA requirements and relevant guidance regarding enforceability and SIP revisions. Rule provisions that do not meet the evaluation criteria are summarized below and discussed further in the technical support document (TSD) for this action.

C. What are the rule deficiencies?

These aspects of the rule do not satisfy the requirements of section 110 and 172(c)(6) of the Act and prevent full approval of the SIP revision:

1. The rule does not contain any numeric emission limit(s) or ongoing monitoring requirements corresponding to the levels of fugitive emissions that were modeled in the Hayden SO_2 Plan.[3] Therefore, the rule does not fully satisfy CAA section 172(c)(6).

2. Rule subsection (E)(4) provides an option for alternative sampling points that could undermine the enforceability of the stack emission limit by providing undue flexibility to change sampling points without undergoing a SIP revision.

3. Rule subsection (E)(6) allows for just under 10% of total facility SO_2 emissions annually to be exempt from CEMS; this could compromise the enforceability of the main stack emission limit.

4. The rule lacks a method for measuring or calculating emissions from the shutdown ventilation flue; this could compromise the enforceability of the main stack emission limit.[4]

5. The rule lacks a method for calculating hourly SO_2 emissions, so it is unclear what constitutes a ''valid hour'' for purposes of allowing data substitution.

D. EPA Recommendations To Further Improve the Rule

In addition to detailing the rule deficiencies listed in the previous section, the TSD includes several other recommendations for improvement for the next time the State modifies the rule.

E. Proposed Action and Public Comment

As authorized in sections 110(k)(3) and 301(a) of the Act, the EPA is proposing a limited approval and limited disapproval of the submitted rule. We will accept comments from the public on this proposal until June 22, 2020. If finalized, this action would incorporate the submitted rule into the SIP, including those provisions identified as deficient. This approval is limited because the EPA is simultaneously proposing a limited disapproval of the rule under section 110(k)(3).

Rule B1302 is relied upon by Arizona in the Hayden SO_2 Attainment State Implementation Plan, which is required under CAA title I, part D. Therefore, if finalized, this disapproval would trigger sanctions under CAA section 179 and 40 CFR 52.31, unless the EPA determines that a subsequent SIP revision corrects the rule deficiencies within 18 months of the effective date of the final action.

Note that the submitted rule has been adopted by ADEQ, and the EPA's final limited disapproval would not prevent the State from enforcing it. The limited disapproval also would not prevent any portion of the rule from being incorporated by reference into the federally enforceable SIP.[5]

III. Incorporation by Reference

In this rule, the EPA is proposing to include in a final EPA rule regulatory text that includes incorporation by reference. In accordance with requirements of 1 CFR 51.5, the EPA is proposing to incorporate by reference the ADEQ rules described in Table 1 of this preamble. The EPA has made, and will continue to make, these materials available through *www.regulations.gov* and at the EPA Region IX Office (please contact the person identified in the **FOR FURTHER INFORMATION CONTACT** section of this preamble for more information).

IV. Statutory and Executive Order Reviews

Additional information about these statutes and Executive Orders can be found at *http://www.epa.gov/laws-regulations/laws-and-executive-orders.*

A. Executive Order 12866: Regulatory Planning and Review and Executive Order 13563: Improving Regulation and Regulatory Review

This action is not a significant regulatory action and was therefore not submitted to the Office of Management and Budget (OMB) for review.

B. Executive Order 13771: Reducing Regulations and Controlling Regulatory Costs

This action is not expected to be an Executive Order 13771 regulatory action because this action is not significant under Executive Order 12866.

C. Paperwork Reduction Act (PRA)

This action does not impose an information collection burden under the PRA because this action does not impose additional requirements beyond those imposed by state law.

D. Regulatory Flexibility Act (RFA)

I certify that this action will not have a significant economic impact on a substantial number of small entities under the RFA. This action will not impose any requirements on small entities beyond those imposed by state law.

E. Unfunded Mandates Reform Act (UMRA)

This action does not contain any unfunded mandate as described in UMRA, 2 U.S.C. 1531–1538, and does not significantly or uniquely affect small governments. This action does not impose additional requirements beyond those imposed by state law. Accordingly, no additional costs to state, local, or tribal governments, or to the private sector, will result from this action.

F. Executive Order 13132: Federalism

This action does not have federalism implications. It will not have substantial direct effects on the states, on the relationship between the national government and the states, or on the distribution of power and responsibilities among the various levels of government.

[3] The EPA is proposing to partially approve and partially disapprove the Hayden SO_2 Plan in a separate rulemaking action.

[4] Rule B1302, section (F)(2) contains a procedure for substituting emissions data for compliance demonstration purposes, ''when no valid hour or hours of data have been recorded by a continuous monitoring system.'' In the absence of a method for calculating hourly emissions, it is unclear when this procedure is to be used.

[5] See Memorandum dated July 21, 1992 from John Calcagni, Director Air Quality Management Division, to EPA Regional Air Directors, Regions I–X, Subject: ''Processing of State Implementation Plan (SIP) Submittals.''

G. Executive Order 13175: Coordination With Indian Tribal Governments

This action does not have tribal implications, as specified in Executive Order 13175, because the SIP is not approved to apply on any Indian reservation land or in any other area where the EPA or an Indian tribe has demonstrated that a tribe has jurisdiction, and will not impose substantial direct costs on tribal governments or preempt tribal law. Thus, Executive Order 13175 does not apply to this action.

H. Executive Order 13045: Protection of Children From Environmental Health Risks and Safety Risks

The EPA interprets Executive Order 13045 as applying only to those regulatory actions that concern environmental health or safety risks that the EPA has reason to believe may disproportionately affect children, per the definition of ''covered regulatory action'' in section 2–202 of the Executive Order. This action is not subject to Executive Order 13045 because it does not impose additional requirements beyond those imposed by state law.

I. Executive Order 13211: Actions That Significantly Affect Energy Supply, Distribution, or Use

This action is not subject to Executive Order 13211, because it is not a significant regulatory action under Executive Order 12866.

J. National Technology Transfer and Advancement Act (NTTAA)

Section 12(d) of the NTTAA directs the EPA to use voluntary consensus standards in its regulatory activities unless to do so would be inconsistent with applicable law or otherwise impractical. The EPA believes that this action is not subject to the requirements of section 12(d) of the NTTAA because application of those requirements would be inconsistent with the CAA.

K. Executive Order 12898: Federal Actions To Address Environmental Justice in Minority Populations and Low-Income Population

The EPA lacks the discretionary authority to address environmental justice in this rulemaking.

List of Subjects in 40 CFR Part 52

Environmental protection, Air pollution control, Incorporation by reference, Intergovernmental relations, Sulfur dioxide, Reporting and recordkeeping requirements.

Authority: 42 U.S.C. 7401 *et seq.*

Dated: May 12, 2020.

John Busterud,

Regional Administrator, Region IX.

[FR Doc. 2020–10587 Filed 5–21–20; 8:45 am]

BILLING CODE 6560–50–P

ENVIRONMENTAL PROTECTION AGENCY

40 CFR Part 52

[EPA–R04–OAR–2020–0071; FRL–10009–07–Region 4]

Air Plan Approval; GA: Permit Requirements

AGENCY: Environmental Protection Agency (EPA).

ACTION: Proposed rule.

SUMMARY: The Environmental Protection Agency (EPA) is proposing to approve a State Implementation Plan (SIP) revision submitted by the State of Georgia, through the Georgia Environmental Protection Division (GA EPD), on October 18, 2019. This SIP revision makes minor edits to Georgia's rule prescribing permitting requirements. EPA has evaluated Georgia's submittal and preliminarily determined that it meets the applicable requirements of the Clean Air Act (CAA) and EPA's regulations.

DATES: Comments must be received on or before June 22, 2020.

ADDRESSES: Submit your comments, identified by Docket ID No. EPA–R04–OAR–2020–0071 at *www.regulations.gov.* Follow the online instructions for submitting comments. Once submitted, comments cannot be edited or removed from *Regulations.gov*. EPA may publish any comment received to its public docket. Do not submit electronically any information you consider to be Confidential Business Information (CBI) or other information whose disclosure is restricted by statute. Multimedia submissions (audio, video, etc.) must be accompanied by a written comment. The written comment is considered the official comment and should include discussion of all points you wish to make. EPA will generally not consider comments or comment contents located outside of the primary submission (*i.e.,* on the web, cloud, or other file sharing system). For additional submission methods, the full EPA public comment policy, information about CBI or multimedia submissions, and general guidance on making effective comments, please visit *www2.epa.gov/dockets/commenting-epa-dockets.*

FOR FURTHER INFORMATION CONTACT: Pearlene Williams, Air Regulatory Management Section, Air Planning and Implementation Branch, Air and Radiation Division, U.S. Environmental Protection Agency, Region 4, 61 Forsyth Street SW, Atlanta, Georgia 30303–8960. Ms. Williams can also be reached via phone at (404) 562–9144 or via electronic mail at *williams.pearlene@epa.gov.*

SUPPLEMENTARY INFORMATION:

I. Background

EPA is proposing to approve a revision to the Georgia SIP to make clarifying and ministerial changes to its permitting regulations at Rule 391–3–1–.03(8), *Permit Requirements.* Georgia's October 18, 2019,[1] submittal changes the status of five counties under paragraph (e), which specifies counties that are contributing to the ambient air levels of the current nonattainment area, and makes other minor typographical edits to other subparagraphs for consistent formatting.

Georgia requires compliance with Nonattainment New Source Review (NNSR) requirements under paragraph (c) in nonattainment areas. The State has one current nonattainment area, which is in nonattainment for the 2015 8-hour ozone NAAQS.[2] At subparagraph (c)14., ''Additional Provisions for Ozone Non-Attainment Areas,'' the State also requires NNSR for certain counties surrounding the current nonattainment area. Specifically, these counties comprise the current maintenance area for the 2008 8-hour ozone NAAQS,[3] which was redesignated to attainment effective June 2, 2017. *See* 82 FR 25523.

In addition, paragraph (e) explains that the Director shall designate any counties that are contributing to the ambient air level of the nonattainment area. Under subparagraph (c)15., those contributing counties are required to carry out certain elements of NNSR for any new or modified electric generating units (EGU). Specifically, those counties must: Define ''major source'' and ''major stationary source'' to include certain sources that emit or have the potential to emit at least 100 tons per year of volatile organic compounds or oxides of nitrogen;[4] identify the net emissions increase threshold triggering the

[1] EPA notes the Agency received the submittal on October 24, 2019.

[2] The current nonattainment area for the 2015 8-hour ozone NAAQS consists of the following Counties: Bartow, Clayton, Cobb, DeKalb, Fulton, Gwinnett, and Henry.

[3] This area is defined at (c)14. as the following Counties: Bartow, Cherokee, Clayton, Cobb, Coweta, DeKalb, Douglas, Fayette, Forsyth, Fulton, Gwinnett, Henry, Newton, Paulding, and Rockdale.

[4] These pollutants are precursors to the formation of ozone.

permitting requirement as a result of a physical or operational change at a major stationary source; and require an emissions offset ratio of at least 1.1:1.[5]

In a January 16, 2020, action (85 FR 2646), EPA approved revisions to Georgia's NNSR rules at Rule 391–3–1–.03(8). As relevant here, GA EPD removed five counties from the list of counties subject to NNSR requirements under subparagraph (c)14. and added these counties to the list of contributing counties subject to some NNSR requirements at Subparagraph (c)15.[6] Georgia's October 18, 2019, SIP revision is intended to align paragraph (e) with the existing requirements in subparagraph (c)(15) by adding those five counties to the list at paragraph (e).

II. EPA's Analysis of the State's Submittal

Georgia's October 18, 2019, submittal changes Rule 391–3–1–.03(e)1. to list Barrow, Carroll, Hall, Spalding, and Walton Counties among those determined by the Director to contribute to the ambient air level of ozone in a revised list of metropolitan Atlanta counties. As discussed above, EPA previously approved the removal of these counties from the list of counties subject to NNSR requirements at subparagraph (c)14. and, in the same action, approved adding these counties to the list of contributing counties at subparagraph (c)15. EPA does not believe that the corresponding change to subparagraph (e)1. requested in the current submittal will substantively impact implementation of Georgia's NNSR program. To the contrary, this change merely makes the list of counties at subparagraph (e)1. consistent with other SIP-approved requirements. In addition, EPA notes that Georgia's October 18, 2019, submittal makes other minor changes to Rule 391–3–1–.03(8), which EPA believes will not substantively impact the State's permitting program. Therefore, EPA is proposing to approve the SIP revision because EPA has preliminarily concluded it is consistent with the CAA and EPA's federal regulations.

III. Incorporation by Reference

In this document, EPA is proposing to include in a final EPA rule regulatory text that includes incorporation by reference. In accordance with requirements of 1 CFR 51.5, EPA is proposing to incorporate by reference the Georgia Rule 391–3–1–.03(8), titled ''Permit Requirements'' State effective September 26, 2019, which incorporates minor revisions to the State's permitting requirements. EPA has made and will continue to make the State Implementation Plan generally available through *www.regulations.gov* and at the EPA Region 4 Office (please contact the person identified in the **FOR FURTHER INFORMATION CONTACT** section of this preamble for more information).

IV. Proposed Action

EPA is proposing to approve the Georgia SIP revision to Rule 391–3–1–.03(8) titled ''Permit Requirements,'' submitted on October 18, 2019, to update the status of five counties that are designated as attainment for the 2015 8-hour ozone NAAQS, but which the Director has determined to impact ambient ozone concentrations in the metropolitan Atlanta area, and therefore must comply with certain additional permitting requirements under subparagraph (8)(c)15. In addition, the October 18, 2019, submittal makes typographical edits to Rule 391–3–1.03(8). EPA has preliminarily concluded that the SIP revision is consistent with the CAA and EPA's regulations.

V. Statutory and Executive Order Reviews

Under the CAA, the Administrator is required to approve a SIP submission that complies with the provisions of the Act and applicable Federal regulations. *See* 42 U.S.C. 7410(k); 40 CFR 52.02(a). Thus, in reviewing SIP submissions, EPA's role is to approve state choices, if they meet the criteria of the CAA. This action merely proposes to approve state law as meeting Federal requirements and does not impose additional requirements beyond those imposed by state law. For that reason, this proposed action:

- Is not a significant regulatory action subject to review by the Office of Management and Budget under Executive Orders 12866 (58 FR 51735, October 4, 1993) and 13563 (76 FR 3821, January 21, 2011);
- Is not an Executive Order 13771 (82 FR 9339, February 2, 2017) regulatory action because SIP approvals are exempted under Executive Order 12866;
- Does not impose an information collection burden under the provisions of the Paperwork Reduction Act (44 U.S.C. 3501 *et seq.*);
- Is certified as not having a significant economic impact on a substantial number of small entities under the Regulatory Flexibility Act (5 U.S.C. 601 *et seq.*);
- Does not contain any unfunded mandate or significantly or uniquely affect small governments, as described in the Unfunded Mandates Reform Act of 1995 (Pub. L. 104–4);
- Does not have Federalism implications as specified in Executive Order 13132 (64 FR 43255, August 10, 1999);
- Is not an economically significant regulatory action based on health or safety risks subject to Executive Order 13045 (62 FR 19885, April 23, 1997);
- Is not a significant regulatory action subject to Executive Order 13211 (66 FR 28355, May 22, 2001);
- Is not subject to requirements of Section 12(d) of the National Technology Transfer and Advancement Act of 1995 (15 U.S.C. 272 note) because application of those requirements would be inconsistent with the CAA; and
- Does not provide EPA with the discretionary authority to address, as appropriate, disproportionate human health or environmental effects, using practicable and legally permissible methods, under Executive Order 12898 (59 FR 7629, February 16, 1994).

The SIP is not approved to apply on any Indian reservation land or in any other area where EPA or an Indian tribe has demonstrated that a tribe has jurisdiction. In those areas of Indian country, the rule does not have tribal implications as specified by Executive Order 13175 (65 FR 67249, November 9, 2000), nor will it impose substantial direct costs on tribal governments or preempt tribal law.

List of Subjects in 40 CFR Part 52

Environmental protection, Air pollution control, Carbon monoxide, Incorporation by reference, Intergovernmental relations, Lead, Nitrogen dioxide, Ozone, Particulate matter, Reporting and recordkeeping requirements, Sulfur oxides, Volatile organic compounds.

Authority: 42 U.S.C. 7401 *et seq.*

Dated: May 12, 2020.

Mary Walker,

Regional Administrator, Region 4.

[FR Doc. 2020–10680 Filed 5–21–20; 8:45 am]

BILLING CODE 6560–50–P

[5] This paragraph also requires these areas to implement best available control technology, consistent with prevention of significant deterioration requirements, rather than the lowest achievable emission rate. Because NNSR is not required for these areas per federal rules, this requirement is appropriate for these projects.

[6] The five counties are Barrow, Carroll, Hall, Spalding, and Walton.

ENVIRONMENTAL PROTECTION AGENCY

40 CFR Part 52

[EPA–R09–OAR–2020–0109; FRL–10008–99–Region 9]

Partial Approval and Partial Disapproval of Air Quality Implementation Plans; Arizona; Nonattainment Plan for the Hayden SO_2 Nonattainment Area

AGENCY: Environmental Protection Agency (EPA).

ACTION: Proposed rule.

SUMMARY: The Environmental Protection Agency (EPA) is proposing to partially approve and partially disapprove an Arizona state implementation plan (SIP) revision for attaining the 2010 1-hour primary sulfur dioxide (SO_2) national ambient air quality standard (NAAQS or ''standard'') for the Hayden SO_2 nonattainment area (NAA). This SIP revision (hereinafter called the ''Hayden SO_2 Plan'' or ''Plan'') includes Arizona's attainment demonstration and other elements required under the Clean Air Act (CAA or ''Act''). The EPA is proposing to approve the base year and projected emissions inventories and to affirm that the new source review requirements for the area have been met. We are proposing to disapprove the attainment demonstration, as well as other elements of the plan tied to this demonstration, namely, the requirement for meeting reasonable further progress (RFP) toward attainment of the NAAQS, reasonably available control measures and reasonably available control technology (RACM/RACT), enforceable emission limitations and control measures, and contingency measures. We are taking comments on this proposal and plan to follow with a final action.

DATES: Any comments on this proposal must be received by June 22, 2020.

ADDRESSES: Submit your comments, identified by Docket ID No. EPA–R09–OAR–2020–0109, at *https://www.regulations.gov,* or via email to Ashley Graham, Air Planning Office at *graham.ashleyr@epa.gov.* For comments submitted at *Regulations.gov*, follow the online instructions for submitting comments. Once submitted, comments cannot be removed or edited from *Regulations.gov*. For either manner of submission, the EPA may publish any comment received to its public docket. Do not submit electronically any information you consider to be Confidential Business Information (CBI) or other information whose disclosure is restricted by statute. Multimedia submissions (*e.g.,* audio or video) must be accompanied by a written comment. The written comment is considered the official comment and should include discussion of all points you wish to make. The EPA will generally not consider comments or comment contents located outside of the primary submission (*i.e.,* on the web, cloud, or other file sharing system). For additional submission methods, please contact the person identified in the **FOR FURTHER INFORMATION CONTACT** section. For the full EPA public comment policy, information about CBI or multimedia submissions, and general guidance on making effective comments, please visit *https://www.epa.gov/dockets/commenting-epa-dockets.*

FOR FURTHER INFORMATION CONTACT: Ashley Graham, EPA Region IX, Air Division, Air Planning Office, (415) 972–3877, *graham.ashleyr@epa.gov.*

SUPPLEMENTARY INFORMATION: Throughout this document, the words ''we,'' ''us,'' or ''our'' refer to the EPA.

Table of Contents

I. Why was Arizona required to submit a plan for the Hayden SO_2 nonattainment area?
II. Requirements for SO_2 Nonattainment Plans
III. Attainment Demonstration and Longer-Term Averaging
IV. Review of Modeled Attainment Demonstration
A. Air Quality Modeling
B. Emission Limits
C. Summary of Results
V. Review of Other Plan Requirements
A. Emissions Inventory
B. Reasonably Available Control Measures and Reasonably Available Control Technology
C. New Source Review
D. Reasonable Further Progress
E. Contingency Measures
VI. Conformity
VII. The EPA's Proposed Action
VIII. Statutory and Executive Order Reviews

I. Why was Arizona required to submit a plan for the Hayden SO_2 nonattainment area?

On June 22, 2010, the EPA promulgated a new 1-hour primary SO_2 NAAQS of 75 parts per billion (ppb). This standard is met at an ambient air quality monitoring site when the 3-year average of the annual 99th percentile of daily maximum 1-hour average concentrations does not exceed 75 ppb, as determined in accordance with appendix T of 40 CFR part 50.[1] On August 5, 2013, the EPA designated a first set of 29 areas of the country as nonattainment for the 2010 SO_2 NAAQS, including the Hayden SO_2 NAA within Arizona.[2] These area designations became effective on October 4, 2013. Section 191(a) of the CAA directs states to submit SIPs for areas designated as nonattainment for the SO_2 NAAQS to the EPA within 18 months of the effective date of the designation, *i.e.,* by no later than April 4, 2015, in this case (hereinafter called ''plans'' or ''nonattainment plans''). Under CAA section 192(a), these plans are required to have measures that will provide for attainment of the NAAQS as expeditiously as practicable, but no later than five years from the effective date of designation, *i.e.,* October 4, 2018, for the Hayden SO_2 NAA.

For a number of areas, including the Hayden SO_2 NAA, the EPA published a document on March 18, 2016, finding that Arizona and other pertinent states had failed to submit the required SO_2 nonattainment plan by the submittal deadline.[3] The finding became effective on April 18, 2016, and initiated a deadline under CAA section 179(a) for the potential imposition of new source review offset and highway funding sanctions. Additionally, under CAA section 110(c), the finding triggered a requirement that the EPA promulgate a federal implementation plan within two years of the effective date of the finding unless by that time the state had made the necessary complete submittal and the EPA had approved the submittal as meeting applicable requirements.

In response to the requirement for SO_2 nonattainment plan submittals, the Arizona Department of Environmental Quality (ADEQ) submitted the Hayden SO_2 Plan on March 9, 2017, and submitted associated final rules on April 6, 2017.[4] The EPA issued letters dated July 17, 2017, and September 26, 2017, finding the submittals complete and halting the sanctions clock under CAA section 179(a).[5]

The remainder of this preamble describes the requirements that nonattainment plans must meet in order to obtain EPA approval, provides a review of the Hayden SO_2 Plan with respect to these requirements, and describes the EPA's proposed action on the Plan.

[1] 75 FR 35520, codified at 40 CFR 50.17(a)–(b).

[2] 78 FR 47191, codified at 40 CFR part 81, subpart C.

[3] 81 FR 14736.

[4] Letters dated March 8, 2017, and April 6, 2017, from Timothy S. Franquist, Director, Air Quality Division, ADEQ, to Alexis Strauss, Acting Regional Administrator, EPA, Region IX. Although the cover letter for the Hayden SO_2 Plan was dated March 8, 2017, the Plan was transmitted to the EPA on March 9, 2017.

[5] Letters dated July 17, 2017, and September 26, 2017, from Elizabeth Adams, Director, Air Division, EPA, Region IX to Timothy S. Franquist, Director, Air Quality Division, ADEQ.

II. Requirements for SO_2 Nonattainment Plans

Nonattainment plans for SO_2 must meet the applicable requirements of the CAA, specifically CAA sections 110, 172, 191, and 192. The EPA's regulations governing nonattainment SIP submissions are set forth at 40 CFR part 51, with specific procedural requirements and control strategy requirements residing at subparts F and G, respectively. Soon after Congress enacted the 1990 Amendments to the CAA, the EPA issued comprehensive guidance on SIP revisions in the ''General Preamble for the Implementation of Title I of the Clean Air Act Amendments of 1990'' (''General Preamble'').[6] Among other things, the General Preamble addressed SO_2 SIP submissions and fundamental principles for SIP control strategies.[7] On April 23, 2014, the EPA issued recommended guidance for meeting the statutory requirements in SO_2 SIP submissions, in a document entitled, ''Guidance for 1-Hour SO_2 Nonattainment Area SIP Submissions'' (''2014 SO_2 Guidance''). In the 2014 SO_2 Guidance, the EPA described the statutory requirements for a complete nonattainment plan, including: an accurate emissions inventory of current emissions for all sources of SO_2 within the NAA; an attainment demonstration; a demonstration of RFP; implementation of RACM (including RACT); new source review; enforceable emission limitations and control measures; and adequate contingency measures for the affected area.

For the EPA to fully approve a SIP revision as meeting the requirements of CAA sections 110, 172, 191, and 192, and the EPA's regulations at 40 CFR part 51, the plan for the affected area needs to demonstrate to the EPA's satisfaction that each of the aforementioned requirements has been met. Under CAA section 110(l), the EPA may not approve a plan that would interfere with any applicable requirement concerning NAAQS attainment and RFP, or any other applicable requirement. Under CAA section 193, no requirement in effect (or required to be adopted by an order, settlement, agreement, or plan in effect before November 15, 1990) in any area that is nonattainment for any air pollutant may be modified in any manner unless it ensures equivalent or greater emission reductions of such air pollutant.

[6] 57 FR 13498 (April 16, 1992).

[7] Id. at 13548–13549, 13567–13568.

III. Attainment Demonstration and Longer-Term Averaging

Sections 172(c)(1) and 172(c)(6) of the CAA direct states with areas designated as nonattainment to demonstrate that the submitted plan provides for attainment of the NAAQS. 40 CFR part 51, subpart G further delineates the control strategy requirements that plans must meet, and the EPA has long required that all SIPs and control strategies reflect four fundamental principles of quantification, enforceability, replicability, and accountability.[8] SO_2 nonattainment plans must consist of two components: (1) Emission limits and other control measures that assure implementation of permanent, enforceable, and necessary emission controls, and (2) a modeling analysis that meets the requirements of 40 CFR part 51, appendix W and demonstrates that these emission limits and control measures provide for timely attainment of the primary SO_2 NAAQS as expeditiously as practicable, but no later than the attainment date for the affected area. In cases where the necessary emission limits have not previously been made a part of the state's SIP or have not otherwise become federally enforceable, the plan needs to include the necessary enforceable limits in an adopted form suitable for incorporation into the SIP in order for the plan to be approved by the EPA. In all cases, the emission limits and control measures must be accompanied by appropriate methods and conditions to determine compliance with the respective emission limits and control measures and must be quantifiable (*i.e.,* a specific amount of emission reduction can be ascribed to the measures), fully enforceable (*i.e.,* specifying clear, unambiguous and measurable requirements for which compliance can be practicably determined), replicable (*i.e.,* the procedures for determining compliance are sufficiently specific and non-subjective so that two independent entities applying the procedures would obtain the same result), and accountable (*i.e.,* source specific limits must be permanent and must reflect the assumptions used in the SIP demonstrations).

The EPA's 2014 SO_2 Guidance recommends that the emission limits be expressed as short-term average limits not to exceed the averaging time for the applicable NAAQS that the limit is intended to help maintain (*e.g.,* addressing emissions averaged over one or three hours), but it also describes the option to utilize emission limits with longer averaging times of up to 30 days as long as the state meets various suggested criteria.[9] The 2014 SO_2 Guidance recommends that, should states and sources utilize longer averaging times (such as 30 days), the longer-term average limit should be set at an adjusted level that reflects a stringency comparable to the 1-hour average limit at the critical emission value shown to provide for attainment.

The 2014 SO_2 Guidance provides an extensive discussion of the EPA's rationale for concluding that appropriately set, comparable stringent limitations based on averaging times as long as 30 days can be found to provide for attainment of the 2010 SO_2 NAAQS. In evaluating this option, the EPA considered the nature of the standard, conducted detailed analyses of the impact of use of 30-day average limits on the prospects for attaining the standard, and carefully reviewed how best to achieve an appropriate balance among the various factors that warrant consideration in judging whether a state's plan provides for attainment.[10]

Preferred air quality models for use in regulatory applications are described in appendix A of the EPA's ''Guideline on Air Quality Models'' (40 CFR part 51, appendix W (''appendix W'')).[11] In general, nonattainment SIP submissions must demonstrate the adequacy of the selected control strategy using the applicable air quality model designated in appendix W.[12] However, where an air quality model specified in appendix W is inappropriate for the particular application, the model may be modified or another model substituted, if the EPA approves the modification or substitution.[13] In 2005, the EPA promulgated the American Meteorological Society/Environmental Protection Agency Regulatory Model (AERMOD) as the Agency's preferred near-field dispersion model for a wide range of regulatory applications addressing stationary sources (*e.g.,* in estimating SO_2 concentrations) in all types of terrain based on an extensive developmental and performance evaluation. Supplemental guidance on modeling for purposes of demonstrating attainment of the SO_2 standard is provided in appendix A of the 2014 SO_2 Guidance. Appendix A provides extensive guidance on the modeling domain, the source inputs, assorted types of meteorological data, and

[8] Id. at 13567–13568.

[9] 2014 SO_2 Guidance, 22–39.

[10] Id. at 22–39, appendices B and D.

[11] The EPA published revisions to appendix W on January 17, 2017, 82 FR 5182.

[12] 40 CFR 51.112(a)(1).

[13] 40 CFR 51.112(a)(2); appendix W, section 3.2.

background concentrations. Consistency with the recommendations in the 2014 SO_2 Guidance is generally necessary for the attainment demonstration to offer adequately reliable assurance that the plan provides for attainment.

As stated previously, attainment demonstrations for the 2010 1-hour primary SO_2 NAAQS must demonstrate future attainment and maintenance of the NAAQS in the entire area designated as nonattainment (*i.e.,* not just at the violating monitor) by using air quality dispersion modeling (see appendix W) to show that the mix of sources and enforceable control measures and emission rates in an identified area will not lead to a violation of the SO_2 NAAQS. For the short-term (*i.e.,* 1-hour) standard, the EPA believes that dispersion modeling, using allowable emissions and addressing stationary sources in the affected area (and in some cases those sources located outside the NAA that may affect attainment in the area) is technically appropriate. This approach is also efficient and effective in demonstrating attainment in NAAs because it takes into consideration combinations of meteorological and source operating conditions that may contribute to peak ground-level concentrations of SO_2.

The meteorological data used in the analysis should generally be processed with the most recent version of AERMET, which is the meteorological data preprocessor for AERMOD. Estimated concentrations should include ambient background concentrations, follow the form of the standard, and be calculated as described in the EPA's August 23, 2010 clarification memorandum.[14]

IV. Review of Modeled Attainment Demonstration

A. Air Quality Modeling

ADEQ's attainment demonstration used AERMOD version 15181, the regulatory version at the time it conducted its nonattainment planning. As input to AERMOD, ADEQ used one year of on-site surface meteorological data collected by ASARCO[15] LLC (''Asarco'') between August 16, 2013, through August 15, 2014, at a 10-meter tower located approximately 0.35 kilometers south of the smelter building. After submittal, ADEQ discovered an error in the processing of the on-site surface meteorological data. Correcting this error changed predicted SO_2 concentrations such that the modeling no longer shows attainment of the 2010 SO_2 NAAQS. ADEQ has been working with Asarco and the EPA on revised modeling and intends to submit a new attainment demonstration and revised emission limits at a future date.[16]

B. Emission Limits

An important prerequisite for approval of a nonattainment plan is the inclusion of ''enforceable emission limitations . . . as may be necessary or appropriate to provide for attainment of such standard in such area by the applicable attainment date . . . .''[17] The emission limits that were intended to provide for attainment of the 2010 SO_2 NAAQS for the Hayden area are codified in the Arizona Administrative Code (AAC), Title 18, Chapter 2, Article 13, Section R18–2–B1302 (''Rule B1302''). ADEQ submitted Rule B1302 to the EPA on March 3, 2017. In a separate action, the EPA is proposing a limited approval and limited disapproval of Rule B1302. We are proposing a limited approval because the rule includes a more stringent SO_2 emission limit for the main stack at the Hayden Smelter compared to the existing SIP-approved limit, as well as operational standards and monitoring, recordkeeping and reporting requirements that strengthen the SIP. At the same time, we are proposing a limited disapproval because of deficiencies in the rule's enforceability. Of particular relevance to the Hayden SO_2 Plan, Rule B1302 does not contain any numeric fugitive emission limits or ongoing monitoring requirements corresponding to the levels of fugitive emissions that were modeled in the Plan. Instead, the rule relies on requirements in an operations and maintenance plan and two year-long fugitive emissions studies to verify compliance with the modeled fugitive emissions. While the fugitive emissions studies will provide useful information to verify the nature and extent of fugitive emissions from the facility, this approach does not satisfy the requirements for enforceable limits that provide for attainment of the SO_2 NAAQS under CAA section 172(c)(6).

In addition, Rule B1302 has several other deficiencies that undermine its enforceability in certain circumstances:

- Rule subsection (E)(4) provides an option for alternative sampling points that could undermine the enforceability of the stack emission limit by providing undue flexibility to change sampling points without undergoing a SIP revision.
- Rule subsection (E)(6) allows for nearly 10 percent of total facility SO_2 emissions annually to be exempt from continuous emissions monitoring systems; this deficiency could compromise the enforceability of the main stack emission limit.
- The rule lacks a method for measuring or calculating emissions from a shutdown ventilation flue; this omission could compromise the enforceability of the main stack emission limit.
- The rule lacks a method for calculating hourly SO_2 emissions; this omission makes it is unclear what constitutes a ''valid hour'' for purposes of allowing data substitution.[18]

In light of these deficiencies, we propose to find that the Hayden SO_2 Plan does not include emissions limits necessary to provide for attainment of the SO_2 NAAQS.

Finally, we note that the main stack emission limit in Rule B1302 takes the form of a ''dual limit,'' under which ''[e]missions from the Main Stack shall not exceed 1069.1 pounds per hour on a 14-operating day average unless 1,518 pounds or less is emitted during each hour of the 14-operating day period.''[19] This dual limit is intended to provide a level of stringency comparable to a one-hour limit of 1,518 pounds per hour. Because we are proposing to find (1) that ADEQ has not demonstrated the emission limits in Rule B1302 are sufficient to provide for attainment and (2) that the stack emission limit is not fully enforceable due to various deficiencies in Rule B1302, we have not evaluated whether the dual limit is of comparable stringency to a simple one-hour limit of 1,518 pounds per hour.

C. Summary of Results

The EPA has reviewed ADEQ's submitted modeling supporting the attainment demonstration for the Hayden SO_2 NAA and has preliminarily determined that this modeling is inconsistent with CAA requirements, appendix W, and the 2014 SO_2 Guidance due to an error in the meteorological fields used. Without accurate modeling we are unable to

[14] ''Applicability of Appendix W Modeling Guidance for the 1-hr SO_2 National Ambient Air Quality Standard'' (August 23, 2010).

[15] ASARCO was organized in 1899 as the American Smelting And Refining COmpany.

[16] Email dated March 25, 2020, from Farah Esmaeili, ADEQ to Rynda Kay, EPA Region IX.

[17] CAA section 172(c)(6). See also 57 FR 13498, 13567–13568 (emission limits that provide for attainment be quantifiable, fully enforceable, replicable, and accountable).

[18] Rule B1302, subsection (F)(2) contains a procedure for substituting emissions data for compliance demonstration purposes ''when no valid hour or hours of data have been recorded by a continuous monitoring system.'' In the absence of a method for calculating hourly emissions, it is unclear when this procedure is to be used.

[19] Rule B1302, subsection (C)(1).

determine that the emission limits are sufficient for the Hayden SO_2 NAA to attain the 2010 SO_2 NAAQS. Furthermore, Rule B1302 does not include a numeric fugitive emissions limit and has other deficiencies related to the enforceability of the main stack emission limit. Therefore, we are proposing to disapprove the attainment demonstration in the Hayden SO_2 Plan pursuant to 172(c) and 192(a).

V. Review of Other Plan Requirements

A. Emissions Inventory

The emissions inventory and source emission rate data for an area serve as the foundation for air quality modeling and other analyses that enable states to estimate the degree to which different sources within a NAA contribute to violations within the affected area and assess the expected improvement in air quality within the NAA due to the adoption and implementation of control measures. The state must develop and submit to the EPA a comprehensive, accurate, and current inventory of actual emissions from all sources of SO_2 emissions in each NAA, as well as any sources located outside the NAA that may affect attainment in the area.[20]

The base year inventory establishes a baseline that is used to evaluate emission reductions achieved by the control strategy and to assess RFP requirements. ADEQ used 2011 as the base year for emissions inventory preparation. At the time of preparation of the Plan, 2011 reflected the most recent triennial National Emission Inventory, supported the requirement for timeliness of data, and was also representative of a year with violations of the primary SO_2 NAAQS. ADEQ reviewed and compiled actual emissions of all sources of SO_2 in the NAA in the 2011 base year emissions inventory. In addition to developing an emissions inventory of SO_2 emission sources within the NAA, ADEQ also provided an SO_2 emissions inventory for those emission sources within a 50 kilometer buffer zone of the NAA. Table 1 summarizes 2011 base year SO_2 emissions inventory data for the NAA, categorized by emission source type (rounded to the nearest whole number).

TABLE 1—BASE YEAR SO_2 EMISSIONS INVENTORY FOR THE HAYDEN SO_2 NAA

[Tons per year]

Year	Point	Nonpoint	On-road mobile	Non-road mobile	Total
2011	21,771	6	<1	2	21,779

Source: Hayden SO_2 Plan, Table 3–10.

As shown in Table 1, the majority of SO_2 emissions in the 2011 base year inventory can be attributed to the point source category. Emissions for this category are provided in further detail in Table 2.

TABLE 2—BASE YEAR POINT SOURCE SO_2 EMISSIONS INVENTORY

Point source	Emissions (Tons per year)
Asarco LLC Hayden Smelter	21,747
Asarco Ray Mine Complex	24
Total	21,771

Source: Hayden SO_2 Plan, Table 3–3.

A projected attainment year emissions inventory should also be included in the SIP submission according to the 2014 SO_2 Guidance. This emissions inventory should include, in a manner consistent with the attainment demonstration, estimated emissions for all SO_2 emission sources that were determined to have an impact on the affected NAA for the projected attainment year. Table 3 summarizes Arizona's projected 2018 SO_2 emissions inventory data for the NAA, categorized by source type. The 2011 base year emissions, as well as the projected change between base year and projected year emissions, are also summarized (rounded to the nearest whole number).

TABLE 3—PROJECTED 2018 EMISSIONS INVENTORY FOR THE HAYDEN SO_2 NAA

[Tons per year]

Year	Point	Nonpoint	On-road mobile	Non-road mobile	Total
2011	21,771	6	<1	2	21,779
2018	7,968	6	<1	<1	7,973
Change	–13,803	0	0	–2	–13,806

Source: Hayden SO_2 Plan, Table 3–16.

As shown in Table 3, both the majority of SO_2 emissions in the projected 2018 emission inventory, as well as the majority of projected SO_2 emission reductions, can be attributed to point sources. Emissions for this category were determined based on a potential to emit at 100 percent load capacity or federally enforceable permit

[20] CAA section 172(c)(3).

limits and are provided in further detail in Table 4. The single largest decrease in emissions is attributed to the Hayden Smelter.

TABLE 4—PROJECTED 2018 POINT SOURCE EMISSIONS INVENTORY

Point source	2011 Base year emissions (tons per year)	2018 Projected year emissions (tons per year)	Change
Asarco LLC Hayden Smelter	21,747	[a] 7,852	–13,895
Asarco Ray Mine Complex	24	116	92
Total	21,771	7,968	–13,803

Source: Hayden SO_2 Plan, Table 3–11.
[a] Because Asarco was required to shut down five existing converters by May 2018, the 2018-projected emissions reflect a partial year of controls. Controls were required be fully implemented prior to 2019, during which emissions were projected to be 2,320 tons.

The EPA has evaluated ADEQ's 2011 base year inventory and projected 2018 emissions inventory for the Hayden SO_2 NAA and finds these inventories and the methodologies used for their development to be consistent with EPA guidance. As a result, the EPA is proposing to determine that the Hayden SO_2 Plan meets the requirements of CAA section 172(c)(3) and (4) for the Hayden SO_2 NAA.

B. Reasonably Available Control Measures and Reasonably Available Control Technology

ADEQ's Plan for attaining the 1-hour SO_2 NAAQS in the Hayden SO_2 NAA is based on implementation of controls at the Hayden Smelter. These controls include the replacement of the existing five converter units with three larger units, installation of more extensive, efficient, and effective fugitive gas control ducting around the converters, and the installation of additional process gas controls before venting to the main stack. These controls are collectively referred to as the ''Converter Retrofit Project.'' ADEQ conducted a RACM/RACT analysis in the Hayden SO_2 Plan, comparing the requirements at the Hayden Smelter with controls in use at other large sources of SO_2 to identify potentially available control measures and eliminating any measures that were not feasible at the Hayden Smelter or not more stringent than those measures already being implemented. ADEQ then compared the proposed control measures for the Hayden Smelter with the measures not eliminated in the first step of the RACM/RACT analysis and concluded that the proposed control measures would be more stringent. Our assessment of ADEQ's RACM/RACT analysis follows.

The State's RACM/RACT analysis can be found in section 4.4.3 of the Hayden SO_2 Plan. ADEQ compared SO_2 controls at eight different facilities and found that all these units use an acid plant to recover or reduce SO_2 emissions. Some of these facilities also use acid absorption equipment (wet and dry scrubbers) to further control emissions of SO_2.

ADEQ concluded that the Hayden Smelter's use of an acid plant, the Converter Retrofit Project, and dry lime scrubbing are comparable to SO_2 control measures employed by similar sources. ADEQ reviewed the EPA's RACT/BACT/LAER Clearinghouse and air permits for facilities likely to have analogous processes as provided by the Air & Waste Management Association and determined that the Converter Retrofit Project controls for the Hayden Smelter are representative of RACM/RACT level of control.

As explained in section IV of this document, we find that ADEQ has not demonstrated that implementation of the control measures required under the Plan is sufficient to provide for attainment of the NAAQS in the Hayden SO_2 NAA because the modeling submitted with the attainment plan is flawed. As explained in the General Preamble, ''control technology which failed to achieve the SO_2 NAAQS would, by definition, fail to be SO_2 RACT.'' [21] Given that RACT is a necessary component of RACM under CAA section 172(c)(1), we propose to conclude that the State has not satisfied the requirement in CAA section 172(c)(1) to adopt and submit all RACM/RACT as needed to attain the standard as expeditiously as practicable.

C. New Source Review

On November 2, 2015, the EPA published a final limited approval and limited disapproval of revisions to ADEQ's new source review (NSR) rules.[22] On May 4, 2018, the EPA approved additional rule revisions to address many of the deficiencies identified in the 2015 action.[23] Collectively, these rule revisions ensure that ADEQ's rules provide for appropriate NSR for SO_2 sources undergoing construction or major modification in the Hayden SO_2 NAA without need for further modification. Therefore, the EPA has already concluded that the NSR requirement has been met for this area, and we are not reopening that determination in this proposed action. We note that Rule B1302 subsection (I) (Preconstruction review) indicates that the smelter emission limits contained in the rule shall be determined to be SO_2 RACT for purposes of minor NSR requirements. This provision does not interfere with or adversely affect existing nonattainment NSR rules.

D. Reasonable Further Progress

In the Hayden SO_2 Plan, Arizona explained its rationale for concluding that the Plan meets the requirement for RFP in accordance with EPA guidance. Specifically, ADEQ's rationale is based on EPA guidance interpreting the RFP requirement being satisfied for SO_2 if the Plan requires ''adherence to an ambitious compliance schedule'' that ''implement[s] appropriate control measures as expeditiously as practicable.'' ADEQ noted that its Plan provides for attainment as expeditiously as practicable, *i.e.,* by October 4, 2018, and finds that the Plan thereby satisfies the requirement for RFP.

ADEQ finds that the Hayden SO_2 Plan requires affected sources to implement appropriate control measures as expeditiously as practicable to ensure attainment of the standard by the applicable attainment date. ADEQ concludes that the Plan provides for RFP in accordance with the approach to RFP described in the 2014 SO_2 Guidance.

[21] 57 FR 13498, 13547.
[22] 80 FR 67319.
[23] 83 FR 19631.

We note that the EPA's policy indicating RFP for SO_2 may be satisfied by ''adherence to an ambitious compliance schedule'' is based on the fact that, ''for SO_2 there is usually a single 'step' between pre-control nonattainment and post-control attainment.'' [24] In this instance, however, ADEQ has not demonstrated that implementation of the control measures required under the Plan is sufficient to provide for attainment of the NAAQS in the Hayden SO_2 NAA. In the absence of a demonstration that the required controls will lead to attainment, a compliance schedule to implement these controls is not sufficient to provide for RFP. Therefore, we propose to conclude that the State has not satisfied the requirement in section 172(c)(2) to provide for RFP toward attainment in the Hayden SO_2 NAA.

E. Contingency Measures

In the Hayden SO_2 Plan, ADEQ explained its rationale for concluding that the Plan meets the requirement for contingency measures. Specifically, ADEQ relies on the 2014 SO_2 Guidance, which notes the special circumstances that apply to SO_2 and explains on that basis why the contingency requirement in CAA section 172(c)(9) is met for SO_2 by having a comprehensive program to identify sources of violations of the SO_2 NAAQS and to undertake an aggressive follow-up for compliance and enforcement of applicable emission limitations. ADEQ stated that it has such an enforcement program pursuant to state law in Arizona Revised Statutes (ARS) sections 49–461, 49–402, 49–404, and 49–406. ADEQ also describes the process under state law to apply contingency measures for failure to make RFP and/or for failure to attain the SO_2 NAAQS by the attainment date and concludes that ADEQ's Plan satisfies contingency measure requirements.

We note that the EPA has approved ARS 49–402, 49–404, 49–406, and 49–461 into the Arizona SIP.[25] In addition, we have approved ARS 49–422(A) (''Powers and Duties''), which authorizes ADEQ to require sources of air contaminants to ''monitor, sample or perform other studies to quantify emissions of air contaminants or levels of air pollution that may reasonably be attributable to that source'' for purposes of determining whether the source is in violation of a control requirement. We have also approved ARS 49–460 through 49–463, which authorize ADEQ to request compliance-related information from sources, to issue orders of abatement upon reasonable cause to believe a source has violated or is violating an air pollution control requirement, to establish injunctive relief, to establish civil penalties of up to $10,000 per day per violation, and to conduct criminal enforcement, as appropriate, through the Attorney General.[26] Therefore, we agree that the Arizona SIP establishes a comprehensive enforcement program, allowing for the identification of sources of SO_2 NAAQS violations and aggressive compliance and enforcement follow-up.

However, the EPA's policy that a comprehensive enforcement program can satisfy the contingency measures requirement is premised on the idea that full compliance with the controls required in the plan will assure attainment. In this case, as explained above, ADEQ has not demonstrated that implementation of the control measures required under the Plan is adequate to provide for RFP and attainment of the NAAQS in the Hayden SO_2 NAA. Accordingly, there is no evidence that a program to enforce these controls would be sufficient to bring the area into attainment in the event of NAAQS violations after the attainment date. Furthermore, the enforceability of these control measures is undermined by the deficiencies in Rule B1302 described in section IV.B. Therefore, we propose to conclude that the State has not satisfied the requirement in section 172(c)(9) to provide for contingency measures to be undertaken if the area fails to make RFP or to attain NAAQS by the attainment date.

VI. Conformity

Generally, as set forth in section 176(c) of the CAA, conformity requires that actions by federal agencies do not cause new air quality violations, worsen existing violations, or delay timely attainment of the relevant NAAQS. General conformity applies to federal actions, other than certain highway and transportation projects, if the action takes place in a NAA or maintenance area (*i.e.,* an area which submitted a maintenance plan that meets the requirements of section 175A of the CAA and has been redesignated to attainment) for ozone, particulate matter, nitrogen dioxide, carbon monoxide, lead, or SO_2. The EPA's General Conformity Rule establishes the criteria and procedures for determining if a federal action conforms to the SIP.[27] With respect to the 2010 SO_2 NAAQS, federal agencies are expected to continue to estimate emissions for conformity analyses in the same manner as they estimated emissions for conformity analyses under the previous NAAQS for SO_2. The EPA's General Conformity Rule includes the basic requirement that a federal agency's general conformity analysis be based on the latest and most accurate emission estimation techniques available.[28] When updated and improved emission estimation techniques become available, the EPA expects the federal agency to use these techniques.

Transportation conformity determinations are not required in SO_2 nonattainment and maintenance areas. The EPA concluded in its 1993 transportation conformity rule that highway and transit vehicles are not significant sources of SO_2. Therefore, transportation plans, transportation improvement programs, and projects are presumed to conform to applicable implementation plans for SO_2.[29]

VII. The EPA's Proposed Action

The EPA is proposing to partially approve and partially disapprove portions of the Hayden SO_2 Plan, which includes ADEQ's attainment demonstration for the Hayden SO_2 NAA and addresses requirements for RFP, RACM/RACT, base year and projected emissions inventories, new source review, and contingency measures. The EPA proposes to determine that the Hayden SO_2 Plan meets the emissions inventory requirements under CAA section 172(c)(3) and (4) and to affirm that the State has met the new source review requirements for the Hayden SO_2 NAA under section 172(c)(5). We propose to determine that the Hayden SO_2 Plan does not meet the attainment demonstration, RACM/RACT, enforceable emission limitations, RFP, or contingency measure requirements of the CAA for the 2010 SO_2 NAAQS. Final partial disapproval of the Hayden SO_2 Plan would trigger sanctions under CAA section 179 and 40 CFR 52.31 unless the EPA determines that Arizona has corrected the deficiencies within 18 months of the effective date of the final action.

The EPA is taking public comments for 30 days following the publication of this proposed action in the **Federal Register**. We will take all relevant timely comments into consideration in our final action.

[24] 2014 SO_2 Guidance, 40.

[25] 40 CFR 52.120(e), Table 3.

[26] 77 FR 66398 (November 5, 2012).

[27] 40 CFR 93.150 to 93.165.

[28] 40 CFR 93.159(b).

[29] 58 FR 3768, 3776 (January 11, 1993).

VIII. Statutory and Executive Order Reviews

Additional information about these statutes and Executive Orders can be found at *http://www2.epa.gov/laws-regulations/laws-and-executive-orders.*

A. Executive Order 12866: Regulatory Planning and Review and Executive Order 13563: Improving Regulation and Regulatory Review

This action is not a significant regulatory action and was therefore not submitted to the Office of Management and Budget (OMB) for review.

B. Executive Order 13771: Reducing Regulations and Controlling Regulatory Costs

This action is not expected to be an Executive Order 13771 regulatory action because this action is not significant under Executive Order 12866.

C. Paperwork Reduction Act (PRA)

This action does not impose an information collection burden under the PRA because this action does not impose additional requirements beyond those imposed by state law.

D. Regulatory Flexibility Act (RFA)

I certify that this action will not have a significant economic impact on a substantial number of small entities under the RFA. This action will not impose any requirements on small entities beyond those imposed by state law.

E. Unfunded Mandates Reform Act (UMRA)

This action does not contain any unfunded mandate as described in UMRA, 2 U.S.C. 1531–1538, and does not significantly or uniquely affect small governments. This action does not impose additional requirements beyond those imposed by state law. Accordingly, no additional costs to state, local, or tribal governments, or to the private sector, will result from this action.

F. Executive Order 13132: Federalism

This action does not have federalism implications. It will not have substantial direct effects on the states, on the relationship between the national government and the states, or on the distribution of power and responsibilities among the various levels of government.

G. Executive Order 13175: Coordination With Indian Tribal Governments

This action does not have tribal implications, as specified in Executive Order 13175, because the SIP is not approved to apply on any Indian reservation land or in any other area where the EPA or an Indian tribe has demonstrated that a tribe has jurisdiction, and will not impose substantial direct costs on tribal governments or preempt tribal law. Thus, Executive Order 13175 does not apply to this action.

H. Executive Order 13045: Protection of Children From Environmental Health Risks and Safety Risks

The EPA interprets Executive Order 13045 as applying only to those regulatory actions that concern environmental health or safety risks that the EPA has reason to believe may disproportionately affect children, per the definition of ''covered regulatory action'' in section 2–202 of the Executive Order. This action is not subject to Executive Order 13045 because it does not impose additional requirements beyond those imposed by state law.

I. Executive Order 13211: Actions That Significantly Affect Energy Supply, Distribution, or Use

This action is not subject to Executive Order 13211, because it is not a significant regulatory action under Executive Order 12866.

J. National Technology Transfer and Advancement Act (NTTAA)

Section 12(d) of the NTTAA directs the EPA to use voluntary consensus standards in its regulatory activities unless to do so would be inconsistent with applicable law or otherwise impractical. The EPA believes that this action is not subject to the requirements of section 12(d) of the NTTAA because application of those requirements would be inconsistent with the CAA.

K. Executive Order 12898: Federal Actions To Address Environmental Justice in Minority Populations and Low-Income Population

The EPA lacks the discretionary authority to address environmental justice in this rulemaking.

List of Subjects in 40 CFR Part 52

Environmental protection, Air pollution control, Incorporation by reference, Intergovernmental relations, Nitrogen dioxide, Particulate matter, Reporting and recordkeeping requirements, Sulfur dioxide, Volatile organic compounds.

Authority: 42 U.S.C. 7401 *et seq.*

Dated: May 12, 2020.

John Busterud,

Regional Administrator, Region IX.

[FR Doc. 2020–10586 Filed 5–21–20; 8:45 am]

BILLING CODE 6560–50–P

ENVIRONMENTAL PROTECTION AGENCY

40 CFR Part 60

[EPA–HQ–OAR–2018–0195; FRL–10009–20–OAR]

RIN 2060–AU87

Standards of Performance for New Residential Wood Heaters, New Residential Hydronic Heaters and Forced-Air Furnaces

AGENCY: Environmental Protection Agency (EPA).

ACTION: Proposed rule.

SUMMARY: The U.S. Environmental Protection Agency (EPA) is proposing to amend the Standards of Performance for New Residential Wood Heaters, New Residential Hydronic Heaters and Forced-Air Furnaces. In response to the situation created by the COVID–19 pandemic, this proposed action restores the retail sales opportunities that were provided by the original 5-year period for ''Step 1'' wood heaters, hydronic heaters, and forced-air furnaces that were manufactured or imported before the May 15, 2020, ''Step 2'' compliance date. Upon promulgation, retailers may continue selling Step 1 heaters through November 30, 2020.

DATES: *Comments.* Comments must be received on or before July 6, 2020.

Public hearing: If anyone contacts us requesting a public hearing on or before May 27, 2020, the EPA will hold a virtual public hearing on June 8, 2020. Please refer to the **SUPPLEMENTARY INFORMATION** section for additional information on the public hearing.

ADDRESSES: You may send comments, identified by Docket ID No. EPA–HQ–OAR–2018–0195, by any of the following methods:

- *Federal eRulemaking Portal: https://www.regulations.gov/* (our preferred method). Follow the online instructions for submitting comments.
- *Email: a-and-r-docket@epa.gov.* Include Docket ID No. EPA–HQ–OAR–2018–0195 in the subject line of the message.

Instructions: All submissions received must include the Docket ID number for this rulemaking. Comments received may be posted without change to *https://www.regulations.gov/,* including any personal information provided. For

detailed instructions on sending comments and additional information on the rulemaking process, see the **SUPPLEMENTARY INFORMATION** section of this document. Out of an abundance of caution for members of the public and our staff, the EPA Docket Center and Reading Room was closed to public visitors on March 31, 2020, to reduce the risk of transmitting COVID–19. Our Docket Center staff will continue to provide remote customer service via email, phone, and webform. We encourage the public to submit comments via *https://www.regulations.gov/* or email, as there is a temporary suspension of mail delivery to the EPA, and no hand deliveries are currently accepted. For further information on EPA Docket Center services and the current status, please visit us online at *https://www.epa.gov/dockets.*

If requested, the virtual hearing will be held on June 8, 2020. The hearing will convene at 9:00 a.m. Eastern Standard Time (EST) and will conclude at 3:00 p.m. EST. The EPA will announce further details on the virtual public hearing website at *https://www.epa.gov/residential-wood-heaters.* Refer to the **SUPPLEMENTARY INFORMATION** section below for additional information.

FOR FURTHER INFORMATION CONTACT: For questions about this action, contact Nathan Topham, Sector Policies and Programs Division, Office of Air Quality Planning and Standards, U.S. Environmental Protection Agency, Research Triangle Park, North Carolina 27711; telephone number: (919) 541–0483 and email address: *topham.nathan@epa.gov.*

SUPPLEMENTARY INFORMATION:

Participation in virtual public hearing. Please note that the EPA is deviating from its typical approach because the President has declared a national emergency. Due to the current Centers for Disease Control and Prevention (CDC) recommendations, as well as state and local orders for social distancing to limit the spread of COVID–19, the EPA cannot hold in-person public meetings at this time.

If a public hearing is requested, the EPA will begin pre-registering speakers for the hearing upon publication of this document in the **Federal Register**. To register to speak at the virtual hearing, please use the online registration form available at *https://www.epa.gov/residential-wood-heaters* or contact Adrian Gates at (919) 541–4860 or by email at *gates.adrian@epa.gov* to register to speak at the virtual hearing. The last day to pre-register to speak at the hearing will be June 4, 2020. On June 5, 2020, the EPA will post a general agenda for the hearing that will list pre-registered speakers in approximate order at: *https://www.epa.gov/residential-wood-heaters.*

The EPA will make every effort to follow the schedule as closely as possible on the day of the hearing; however, please plan for the hearing to run either ahead of schedule or behind schedule.

Each commenter will have 5 minutes to provide oral testimony. The EPA encourages commenters to provide the EPA with a copy of their oral testimony electronically (via email) by emailing it to Nathan Topham and Adrian Gates. The EPA also recommends submitting the text of your oral testimony as written comments to the rulemaking docket.

The EPA may ask clarifying questions during the oral presentations but will not respond to the presentations at that time. Written statements and supporting information submitted during the comment period will be considered with the same weight as oral testimony and supporting information presented at the public hearing.

Please note that any updates made to any aspect of the hearing will be posted online at *https://www.epa.gov/residential-wood-heaters.* While the EPA expects the hearing to go forward as set forth above, if requested, please monitor our website or contact Adrian Gates at (919) 541–4860 or *gates.adrian@epa.gov* to determine if there are any updates. The EPA does not intend to publish a document in the **Federal Register** announcing updates.

If you require the services of a translator or a special accommodation such as audio description, please pre-register for the hearing with Adrian Gates and describe your needs by May 29, 2020. The EPA may not be able to arrange accommodations without advance notice.

Docket. The EPA has established a docket for this rulemaking under Docket ID No. EPA–HQ–OAR–2018–0195. All documents in the docket are listed on the *https://www.regulations.gov/* website. Although listed, some information is not publicly available, *e.g.,* Confidential Business Information (CBI) or other information whose disclosure is restricted by statute. Certain other material, such as copyrighted material, is not placed on the internet and will be publicly available only in hard copy. Publicly available docket materials are available electronically through *https://www.regulations.gov/.*

Instructions. Direct your comments to Docket ID No. EPA–HQ–OAR–2018–0195. The EPA's policy is that all comments received will be included in the public docket without change and may be made available online at *https://www.regulations.gov/,* including any personal information provided, unless the comment includes information claimed to be CBI or other information whose disclosure is restricted by statute. Do not submit information that you consider to be CBI or otherwise protected through *https://www.regulations.gov/* or email. This type of information should be submitted by mail as discussed below.

The EPA may publish any comment received to its public docket. Multimedia submissions (audio, video, etc.) must be accompanied by a written comment. The written comment is considered the official comment and should include discussion of all points you wish to make. The EPA will generally not consider comments or comment contents located outside of the primary submission (*i.e.,* on the Web, cloud, or other file sharing system). For additional submission methods, the full EPA public comment policy, information about CBI or multimedia submissions, and general guidance on making effective comments, please visit *https://www.epa.gov/dockets/commenting-epa-dockets.*

The *https://www.regulations.gov/* website allows you to submit your comment anonymously, which means the EPA will not know your identity or contact information unless you provide it in the body of your comment. If you send an email comment directly to the EPA without going through *https://www.regulations.gov/,* your email address will be automatically captured and included as part of the comment that is placed in the public docket and made available on the internet. If you submit an electronic comment, the EPA recommends that you include your name and other contact information in the body of your comment and with any digital storage media you submit. If the EPA cannot read your comment due to technical difficulties and cannot contact you for clarification, the EPA may not be able to consider your comment. Electronic files should not include special characters or any form of encryption and be free of any defects or viruses. For additional information about the EPA's public docket, visit the EPA Docket Center homepage at *https://www.epa.gov/dockets.*

The EPA is temporarily suspending its Docket Center and Reading Room for public visitors to reduce the risk of transmitting COVID–19. Written

comments submitted by mail are temporarily suspended and no hand deliveries will be accepted. Notwithstanding the suspension of mail submission of regular comments, comments containing CBI should be submitted by mail.[1] Our Docket Center staff will continue to provide remote customer service via email, phone, and webform. We encourage the public to submit comments via *https://www.regulations.gov/.* For further information and updates on EPA Docket Center services, please visit us online at *https://www.epa.gov/dockets.*

The EPA continues to carefully and continuously monitor information from the CDC, local area health departments, and our federal partners so that we can respond rapidly as conditions change regarding COVID–19.

Submitting CBI. Do not submit information containing CBI to the EPA through *https://www.regulations.gov/* or email. Clearly mark the part or all of the information that you claim to be CBI. For CBI information on any digital storage media that you mail to the EPA, mark the outside of the digital storage media as CBI and then identify electronically within the digital storage media the specific information that is claimed as CBI. In addition to one complete version of the comments that includes information claimed as CBI, you must submit a copy of the comments that does not contain the information claimed as CBI directly to the public docket through the procedures outlined above. If you submit any digital storage media that does not contain CBI, mark the outside of the digital storage media clearly that it does not contain CBI. Information not marked as CBI will be included in the public docket and the EPA's electronic public docket without prior notice. Information marked as CBI will not be disclosed except in accordance with procedures set forth in 40 Code of Federal Regulations (CFR) part 2. Send or deliver information identified as CBI only to the following address: OAQPS Document Control Officer (C404–02), OAQPS, U.S. Environmental Protection Agency, Research Triangle Park, North Carolina 27711, Attention Docket ID No. EPA–HQ–OAR–2018–0195. Note that written comments containing CBI and submitted by mail may be delayed and no hand deliveries will be accepted.

Preamble acronyms and abbreviations. We use multiple acronyms and terms in this preamble. While this list may not be exhaustive, to ease the reading of this preamble and for reference purposes, the EPA defines the following terms and acronyms here:

BSER best system of emission reduction
CAA Clean Air Act
CBI Confidential Business Information
CDC Centers for Disease Control and Prevention
CFR Code of Federal Regulations
EPA Environmental Protection Agency
EST Eastern Standard Time
NAICS North American Industry Classification System
NSPS new source performance standards
NTTAA National Technology Transfer and Advancement Act
PRA Paperwork Reduction Act
OMB Office of Management and Budget
RFA Regulatory Flexibility Act
RWH Residential Wood Heater
UMRA Unfunded Mandates Reform Act

Organization of this document. The information in this preamble is organized as follows:

I. General Information
A. Does this action apply to me?
B. Where can I get a copy of this document and other related information?
II. Background
A. Statutory Background
B. What action is the Agency taking?
III. Why is the Agency taking this action?
IV. Summary of Cost, Environmental, and Economic Impacts
V. Labeling Provisions
VI. Statutory and Executive Order Reviews
A. Executive Order 12866: Regulatory Planning and Review and Executive Order 13563: Improving Regulation and Regulatory Review
B. Paperwork Reduction Act (PRA)
C. Regulatory Flexibility Act (RFA)
D. Unfunded Mandates Reform Act (UMRA)
E. Executive Order 13132: Federalism
F. Executive Order 13175: Consultation and Coordination With Indian Tribal Governments
G. Executive Order 13045: Protection of Children From Environmental Health Risks and Safety Risks
H. Executive Order 13211: Actions Concerning Regulations That Significantly Affect Energy Supply, Distribution, or Use
I. National Technology Transfer and Advancement Act (NTTAA)
J. Executive Order 12898: Federal Actions To Address Environmental Justice in Minority Populations and Low-Income Populations
K. Application of CAA Section 307(d)

I. General Information

A. Does this action apply to me?

Table 1 lists the categories and entities that are the subject of this proposal. Table 1 is not intended to be exhaustive, but rather provides a guide for readers regarding the entities that this proposed action is likely to affect. The proposed revisions, if finalized, will be directly applicable to the affected entities. Federal, state, local, and tribal government entities will not be affected by this proposed action. Table 1 lists the types of entities that the EPA is now aware could potentially be affected by this action. Other types of entities not listed in the table could also be affected. To determine whether your entity is affected by this action, you should carefully examine the applicability criteria found in 40 CFR part 60, subpart AAA, 40 CFR 60.530 and 40 CFR part 60, subpart QQQQ, 40 CFR 60.5472. If you have questions regarding the applicability of this action to a particular entity, consult the person listed in the **FOR FURTHER INFORMATION CONTACT** section.

TABLE 1—SOURCE CATEGORIES AFFECTED BY THIS PROPOSED ACTION

Category	NAICS code [1]	Examples of entities that could be affected by this action
Residential Wood Heating	333414	Manufacturers, owners, and operators of wood heaters, pellet heaters/stoves, and hydronic heaters.
	333415	Manufacturers, owners, and operators of forced-air furnaces.
Retailers	423730	Warm air heating and air-conditioning equipment and supplies merchant wholesalers.

[1] North American Industry Classification System.

[1] As discussed below, CBI should not be submitted electronically through *Regulations.gov* or email. CBI should be submitted following the procedures specified in the ''Submitting CBI'' section below. We encourage commenters to submit redacted or non-CBI versions of comments electronically and include a statement in their electronic comments that they have separately submitted any CBI following the instructions below.

B. Where can I get a copy of this document and other related information?

In addition to being available in the docket, an electronic copy of this action is available on the internet. Following signature by the EPA Administrator, the EPA will post a copy of this proposed action at *https://www.epa.gov/residential-wood-heaters.* Following publication in the **Federal Register**, the EPA will post the **Federal Register** version of the proposal and key technical documents at this same website.

A redline version of the regulatory language that incorporates the proposed changes in this action is available in the docket for this action (Docket ID No. EPA–HQ–OAR–2018–0195).

II. Background

A. Statutory Background

Section 111 of the Clean Air Act (CAA) requires the EPA Administrator to list categories of stationary sources that, in his or her judgment, cause or contribute significantly to air pollution which may reasonably be anticipated to endanger public health or welfare. The EPA must then issue ''standards of performance'' for new sources in such source categories. The EPA has the authority to define the source categories, determine the pollutants for which standards should be developed, and identify within each source category the facilities for which standards of performance will be established.

CAA section 111(a)(1) defines ''a standard of performance'' as ''a standard for emissions of air pollutants which reflects the degree of emission limitation achievable through the application of the best system of emission reduction which (taking into account the cost of achieving such reduction and any non-air quality health and environmental impact and energy requirement) the Administrator determines has been adequately demonstrated.'' This definition makes clear that the standard of performance must be based on ''the best system of emission reduction (BSER).'' The standard that the EPA develops, based on the BSER, is commonly a numerical emission limit, expressed as a performance level. As provided in CAA section 111(b)(5), the EPA does not prescribe a specific technology that must be used to comply with a standard of performance. Rather, sources generally can select any measure or combination of measures that will achieve the emission level of the standard.

B. What action is the Agency taking?

The EPA is proposing amendments to mitigate the impact of the ongoing COVID–19 pandemic on retailers who have lost valuable sales opportunities during the closures, stay-at-home orders, and other precautions taken to address the pandemic. The EPA is proposing to amend 40 CFR 60.532(b) of 40 CFR part 60, subpart AAA, to allow an affected residential wood heater manufactured or imported on or before May 15, 2020, and certified to meet the 2015 particulate matter emission limit specified in 40 CFR 60.532(a), to be sold at retail on or before November 30, 2020. The EPA is also proposing to amend 40 CFR 60.5474(a)(2) of 40 CFR part 60, subpart QQQQ, to allow an affected residential hydronic heater manufactured or imported on or before May 15, 2020, and certified to meet the 2015 particulate matter emission limit specified in 40 CFR 60.5474(b)(1), to be sold at retail on or before November 30, 2020. Finally, the EPA is proposing to amend 40 CFR 60.5474(a)(6) of 40 CFR part 60, subpart QQQQ, to allow an affected residential forced-air furnace manufactured or imported on or before May 15, 2020, and certified to meet the applicable 2016 and 2017 particulate matter emission limits specified in 40 CFR 60.5474(b)(4) and (5), respectively, to be sold at retail on or before November 30, 2020. The EPA is proposing to make conforming changes in the compliance certification requirements (40 CFR 60.533(h)(1) and (2) of 40 CFR part 60, subpart AAA, and 40 CFR 60.5475(a)(3) through (7) and (h) of 40 CFR part 60, subpart QQQQ) so that the compliance certification reflects the November 30, 2020, proposed date when applicable.

If these proposed revisions are finalized, we propose to make the revisions effective upon publication of the final rule in the **Federal Register**.

This action is unlikely to affect the total number of Step 1 units available on the market because the prohibition on manufacture of these units after May 15, 2020, remains. Therefore, this action allows manufacturers and retailers, of which 90 percent are small businesses, to recover the sales opportunities they would have had in the absence of the pandemic.

III. Why is the Agency taking this action?

Residential wood heaters were originally listed under CAA section 111(b) on February 18, 1987 (see 52 FR 5065). Once listed, the EPA developed NSPS to implement section 111(b) of the CAA. The standards apply to new stationary sources of emissions, *i.e.,* sources whose construction, reconstruction, or modification begins after a standard for those sources is proposed. The NSPS for wood heaters (40 CFR part 60, subpart AAA) was proposed on February 18, 1987 (see 52 FR 4994) and promulgated on February 26, 1988 (see 53 FR 5859) (1988 Wood Heater NSPS). The NSPS was amended in 1998 to address an issue related to certification testing (see 63 FR 64869).

On February 3, 2014, the EPA proposed revisions to the NSPS (see 79 FR 6330) and promulgated revisions on March 16, 2015 (see 80 FR 13672). The final 2015 NSPS updated the 1988 Wood Heater NSPS emission limits, eliminated exemptions over a broad suite of residential wood combustion devices, and updated test methods and the certification process. The 2015 NSPS also added a new subpart (40 CFR part 60, subpart QQQQ) that covers new wood burning residential hydronic heaters and new forced-air furnaces.

The Residential Wood Heater source category is different from most NSPS source categories in that it regulates mass-produced residential consumer appliance products, rather than industrial facilities. Thus, important elements in determining the BSER include the costs and environmental impacts on consumers of delaying production while wood heating devices are designed, tested, field evaluated, and certified. Section 111(b)(1)(B) of the CAA requires that the standards be effective upon the promulgation of the NSPS. Considering these factors, as discussed more fully in the 2015 **Federal Register** document, the 2015 NSPS final rule took a two-step compliance approach, in which certain Step 1 standards became effective on May 15, 2015, and more stringent Step 2 standards would become effective 5 years later, on May 15, 2020. In particular, one of the bases for the Step 2 limits and deadline was that 5 years was sufficient time for manufaturers to develop models to meet the more stringent Step 2 standards and for retailers to transition from selling Step 1 units to Step 2 units. Providing this 5 year time period was a key aspect of the 2015 rule because, pursuant to CAA 111(a)(1), the stringency of a standard of performance under CAA 111 must reflect ''the degree of emission limitation achievable'' through the application of the best system of emission reduction. In turn, what is achievable is dependent on how much ''lead time'' sources have to meet the standard. See *Portland Cement Assn.* v. *Ruckelshaus,* 486 F.2d 375, 391–92 (D.C. Cir. 1973). According to industry

representatives, the time lost due to the pandemic has impacted manufacturers as well as retailers because manufacturers will be required to repurchase some unsold units from retailers.[2]

The 2015 rule provided that retailers would have until May 15, 2020, to sell heaters and furnaces that were certified to meet the Step 1 limits. Based on the current NSPS, all units sold after May 15, 2020, must meet the more stringent Step 2 standards. Hence, under the current rule, units certified to meet Step 1 standards may no longer be sold after May 15, 2020.

On November 30, 2018, the EPA proposed (see 83 FR 61574) to amend 40 CFR part 60, subpart QQQQ, to allow a ''sell-through'' provision to give retailers additional time after the May 2020 effective date of the Step 2 standard to sell Step 1-compliant hydronic heaters and forced-air furnaces remaining in their inventory. The EPA also took comment on whether to amend 40 CFR part 60, subpart AAA, for wood heaters and pellet fuel heaters to provide a similar sell-through period.

Based on the comments and data received, the EPA decided to take final action on the proposed sell-through provisions by not promulgating such provisions, because insufficient relevant data were submitted to substantiate a rule revision to provide a sell-through provision (see 85 FR 18448). The EPA solicited comment via a range of questions in the proposal. While manufacturers and retailers made qualitative statements asserting economic harm from stranded inventories if a retail sell-through was not allowed, these statements were generally not supported by actual data and did not demonstrate that the 5-year period provided by the 2015 rule was not sufficient time to meet the Step 2 deadline.

In a recent turn of events, the COVID–19 pandemic has resulted in very significant losses of retail sales [3] beginning about March 15 and expected to continue through May 15, 2020 (the deadline for the Step 2 standards), due to substantial temporary closure of stores, stay at home directives, and the overall focus on addressing the challenges posed by the pandemic. This situation has resulted in a loss of about 60 days of the remaining time retailers were authorized to sell remaining Step 1 units, and, thus, deprived them of the full 5-year time period that formed the basis for the Step 2 standards and deadline set in the 2015 rule. In the absence of the COVID–19 pandemic, retailers would have been working diligently throughout this 60-day period to sell Step 1 devices by offering discounts, sales events, and other incentives before the May 15, 2020, deadline. In this proposed rule, EPA is proposing to provide time for retailers to sell Step 1 devices to ensure they get the full benefit of the 5 year ''lead time'' on which the Step 2 standards were based by replacing the time period for sales opportunities that lost due to COVID–19.

It is difficult to precisely replace the lost sales opportunities resulting from the lost 60 days. First, there is still significant uncertainty with regard to when the pandemic will subside enough such that retailers can reopen, re-hire staff who have been temporarily laid-off, and resume a level of normal retail operations.

Second, summer months are typically a very low selling season for wood heating devices.[4] Thus, simply providing an additional 60 days during the summer would not replace the sales opportunities lost due to the steps taken to protect public health during the pandemic and, thus, not replace the time lost from the 5-year period that was contemplated in the 2015 rule.

For all of these reasons, to ensure retailers will regain the sales opportunities lost as a result of the closures, shut-down orders, and other precautions taken due to the pandemic during the last 60 days leading up to May 15, 2020, the EPA is proposing to allow retailers to sell Step 1 certified wood heating devices from the date of promulgation, if this proposal is promulgated, until November 30, 2020. In addition, in light of the above, during the period between May 15, 2020, and publication of EPA's final action on this proposal, EPA will treat the sale of Step 1 devices as a low enforcement priority.

IV. Summary of Cost, Environmental, and Economic Impacts

The COVID–19 pandemic is causing an unanticipated impact (mandatory store closures, loss of sales, excess stranded inventory) that the proposed rule will help to mitigate. This action roughly replaces the 60 days of sales opportunities that retailers would have otherwise had in the absence of the pandemic.

The EPA understands that there may be impacts from this proposed action, if it is finalized as proposed. We are unable to quantify what, if any, impacts there may be and seek public comments to help inform us of any potential impacts. We are placing the Supplemental Regulatory Impact Analysis (RIA) from the 2018 proposed ''sell-through'' in the docket as an illustration of what impacts of additional sales time could look like.

V. Labeling Provisions

The EPA is aware of a potential issue that could be faced by retailers selling Step 1 units during the proposed sales period that would begin well after May 15, 2020, and run to November 30, 2020. Both subparts, 40 CFR part 60, subpart AAA, and 40 CFR part 60, subpart QQQQ, contain requirements for permanent labels to be affixed to affected units as required in 40 CFR 60.536(b) of 40 CFR part 60, subpart AAA, and 40 CFR 60.5478(b) of 40 CFR part 60, subpart QQQQ, as applicable. Under these provisions, such labels must display a statement that the unit is ''U.S. ENVIRONMENTAL PROTECTION AGENCY Certified to comply with the 2015 {or other applicable standard} particulate emission standards. Not approved for sale after May 15, 2020.'' The statement that the unit is ''Not approved for sale after May 15, 2020'' could confuse consumers who might not understand that (if the proposed sell-through is finalized), such units could, in fact, legally be sold after May 15, 2020, and until November 30, 2020. To address this potential issue, if the proposed sales period is finalized, retailers would be allowed to notify potential customers with signs, decals, hangtags or other types of signage communicating that retailers are allowed to sell, and consumers are allowed to purchase, the Step 1 devices until November 30, 2020, notwithstanding the label that is required to be permanently affixed to the unit. The EPA notes that, even if the proposed sales period is finalized, no person may remove or alter the existing permanent label that is required to be affixed to the unit.

VI. Statutory and Executive Order Reviews

Additional information about these statutes and Executive orders can be found at *https://www.epa.gov/laws-regulations/laws-and-executive-orders.*

[2] Letter from Jack Goldman, Hearth, Patio & Barbecue Association to Andrew Wheeler, U.S. EPA, dated March 24, 2020. See page 2, ''In addition, some of our members supply major home center chains, and report that over $10 million worth of product will not sell in time and must be repurchased. This may even call into question the continued existence of these small manufacturers.''

[3] Letter from Jack Goldman, Hearth, Patio & Barbecue Association to Andrew Wheeler, U.S. EPA, dated March 24, 2020.

[4] *2018 December Business Climate Report in Hearth and Home Magazine,* dated February 2019, showing monthly sales data.

A. Executive Order 12866: Regulatory Planning and Review and Executive Order 13563: Improving Regulation and Regulatory Review

This action is a significant regulatory action that was submitted to the Office of Management and Budget (OMB) for review because it has novel legal and policy issues. Any changes made in response to OMB recommendations have been documented in the docket.

B. Paperwork Reduction Act (PRA)

This action does not impose any new information collection burden under the PRA. The OMB has previously approved the information collection activities contained in the existing regulations and has assigned OMB control numbers 2060–0161 (40 CFR part 60, subpart AAA) and 2060–0693 (40 CFR part 60, subpart QQQQ). This action is believed to result in no changes to the information collection requirements of the 2015 NSPS, so that the information collection estimate of project cost and hour burden from the 2015 final rule have not been revised.

C. Regulatory Flexibility Act (RFA)

I certify that this action will not have a significant economic impact on a substantial number of small entities under the RFA. In making this determination, the impact of concern is any significant adverse economic impact on small entities. An agency may certify that a rule will not have a significant economic impact on a substantial number of small entities if the rule relieves regulatory burden, has no net burden, or otherwise has a positive economic effect on the small entities subject to the rule. This action provides sufficient time to retailers of Step 1 residential wood heaters and residential hydronic heaters and forced-air furnaces, including the 90% of them that are small businesses, to sell inventory that would otherwise be stranded due to the lost sales time as a result of the COVID–19 pandemic situation without an extension of the Step 2 compliance date.

D. Unfunded Mandates Reform Act (UMRA)

This action does not contain an unfunded mandate of $100 million or more as described in UMRA, 2 U.S.C. 1531–1538, and does not significantly or uniquely affect small governments. The action imposes no enforceable duty on any state, local, or tribal governments or the private sector.

E. Executive Order 13132: Federalism

This action does not have federalism implications. It will not have substantial direct effects on the states, on the relationship between the National Government and the states, or on the distribution of power and responsibilities among the various levels of government.

F. Executive Order 13175: Consultation and Coordination With Indian Tribal Governments

This action does not have tribal implications as specified in Executive Order 13175. This action does not change any requirements for affected entities, including tribes. Thus, Executive Order 13175 does not apply to this action. Consistent with the EPA Policy on Consultation and Coordination with Indian Tribes, the EPA will provide outreach through the National Tribal Air Association and will offer consultation to tribal officials.

G. Executive Order 13045: Protection of Children From Environmental Health Risks and Safety Risks

The EPA interprets Executive Order 13045 as applying only to those regulatory actions that concern environmental health or safety risks that the EPA has reason to believe may disproportionately affect children, per the definition of ''covered regulatory action'' in section 2–202 of the Executive order. This action is not subject to Executive Order 13045 because it does not concern an environmental health risk or safety risk.

H. Executive Order 13211: Actions Concerning Regulations That Significantly Affect Energy Supply, Distribution, or Use

This action is not subject to Executive Order 13211, because it is not a significant regulatory action under Executive Order 12866.

I. National Technology Transfer and Advancement Act (NTTAA)

This rulemaking does not involve technical standards.

J. Executive Order 12898: Federal Actions To Address Environmental Justice in Minority Populations and Low-Income Populations

The EPA believes that this action does not have disproportionately high and adverse human health or environmental effects on minority populations, low-income populations, and/or indigenous peoples, as specified in Executive Order 12898 (59 FR 7629, February 16, 1994). The amendments will not have a significant effect on emissions.

K. Application of CAA Section 307(d)

Pursuant to CAA section 307(d)(1)(C), this action is subject to the provisions of CAA section 307(d). To the extent that any aspect of this rule is not within the scope of CAA section 307(d)(1)(C), pursuant to CAA section 307(d)(1)(V), the Administrator determines that this action is subject to the provisions of CAA section 307(d). Section 307(d)(1)(V) of the CAA provides that the provisions of CAA section 307(d) apply to ''such other actions as the Administrator may determine.''

List of Subjects in 40 CFR Part 60

Environmental protection, Administrative practice and procedure.

Andrew Wheeler,

Administrator.

For the reasons set forth in the preamble, 40 CFR part 60 is proposed to be amended as follows:

PART 60—STANDARDS OF PERFORMANCE FOR NEW STATIONARY SOURCES

■ 1. The authority citation for part 60 continues to read as follows:

Authority: 42 U.S.C. 7401 *et seq.*

Subpart AAA—Standards of Performance for New Residential Wood Heaters

■ 2. Section 60.532 is amended by revising paragraph (b) to read as follows:

§ 60.532 What standards and associated requirements must I meet and by when?

* * * * *

(b) *2020 particulate matter emission standards.* Unless exempted under § 60.530(b) or electing to use the cord wood alternative means of compliance option in paragraph (c) of the section, each affected wood heater manufactured or sold at retail for use in the United States on or after May 15, 2020, must not discharge into the atmosphere any gases that contain particulate matter in excess of a weighted average of 2.0 g/hr (0.0044 lb/hr). However, an affected wood heater manufactured or imported on or before May 15, 2020, and certified as of May 15, 2020, to meet the 2015 particulate matter emission limit in paragraph (a) of this section may be sold at retail on or before November 30, 2020. Compliance for all heaters must be determined by the test methods and procedures in § 60.534.

* * * * *

■ 3. Section 60.533 is amended by revising paragraphs (h)(1) and (2) to read as follows:

§ 60.533 What compliance and certification requirements must I meet and by when?

* * * * *

(h) * * *

(1) For a model line that was previously certified as meeting the 1990 Phase II emission standards under the 1988 new source performance standards (NSPS), in effect prior to May 15, 2015, at an emission level equal to or less than the 2015 emission standards in § 60.532(a), the model line is deemed to have a certificate of compliance for the 2015 emission standards in § 60.532(a), which is valid until the effective date for the 2020 standards in § 60.532(b) (*i.e.,* until May 15, 2020). However, a model line, manufactured or imported on or before May 15, 2020, with a certificate of compliance for the 2015 emission standards that was in effect as of May 15, 2020, may be sold at retail on or before November 30, 2020.

(2) For a model line certified as meeting emission standards in § 60.532, a certificate of compliance will be valid for 5 years from the date of issuance or until a more stringent standard comes into effect, whichever is sooner. However, a model line, manufactured or imported on or before May 15, 2020, with a certificate of compliance for the 2015 emission standards that was in effect as of May 15, 2020, may be sold at retail on or before November 30, 2020.

* * * * *

Subpart QQQQ—Standards of Performance for New Residential Hydronic Heaters and Forced-Air Furnaces

■ 4. Section 60.5474 is amended by revising paragraphs (a)(2) and (6) to read as follows:

§ 60.5474 What standards and requirements must I meet and by when?

(a) * * *

(2) On or after May 15, 2020, manufacture or sell at retail a residential hydronic heater unless it has been certified to meet the 2020 particulate matter emission limit in paragraph (b)(2) or (3) of this section, except that a residential hydronic heater manufactured or imported on or before May 15, 2020, and certified as of May 15, 2020, to meet the 2015 particulate matter emission limit in paragraph (b)(1) of this section, may be sold at retail on or before November 30, 2020.

* * * * *

(6) On or after May 15, 2020, manufacture or sell at retail a small or large residential forced-air furnace unless it has been certified to meet the 2020 particulate matter emission limit in paragraph (b)(6) of this section, except that a small or large residential forced-air furnace manufactured or imported on or before May 15, 2020, and certified as of May 15, 2020, to meet the applicable particulate matter emission limit in paragraph (b)(4) or (5) of this section, respectively, may be sold at retail on or before November 30, 2020.

* * * * *

■ 5. Section 60.5475 is amended by revising paragraphs (a)(3) through (7) and (h) to read as follows:

§ 60.5475 What compliance and certification requirements must I meet and by when?

(a) * * *

(3) Models qualified as meeting the Phase 2 emission levels under the 2011 EPA hydronic heater partnership agreement are automatically deemed to have a certificate of compliance for the 2015 particulate matter emission standards and be valid until the effective date for the 2020 particulate matter emission standards in § 60.5474. However, a model line, manufactured or imported on or before May 15, 2020, with a certificate of compliance for the 2015 emission standards that was in effect as of May 15, 2020, may be sold at retail on or before November 30, 2020.

(4) Models certified by the New York State Department of Environment and Conservation to meet the emission levels in § 60.5474(b) are automatically deemed to have a certificate of compliance for the 2015 particulate matter emission standards and be valid until the effective date for the 2020 particulate matter emission standards in § 60.5474. However, a model line, manufactured or imported on or before May 15, 2020, with a certificate of compliance for the 2015 emission standards that was in effect as of May 15, 2020, may be sold at retail on or before November 30, 2020.

(5) Models approved by the New York State Energy Research and Development Authority under the Renewable Heat New York (RHNY) Biomass Boiler Program are automatically deemed to have a certificate of compliance for the 2015 particulate matter emission standards and be valid until the effective date for the 2020 particulate matter emission standards in § 60.5474 provided that they comply with the thermal storage requirements in the RHNY program. However, a model line, manufactured or imported on or before May 15, 2020, with a certificate of compliance for the 2015 emission standards that was in effect as of May 15, 2020, may be sold at retail on or before November 30, 2020.

(6) Small forced-air furnace models that are certified under CSA B415.1–10 (IBR, see § 60.17), by an EPA approved third-party certifier, to meet the 2016 particulate matter emission level will be automatically deemed to have a certificate of compliance for the 2016 particulate matter emission standards and be valid until the effective date for the 2020 particulate matter emission standards in § 60.5474. However, a model line, manufactured or imported on or before May 15, 2020, with a certificate of compliance for the 2016 emission standards that was in effect as of May 15, 2020, may be sold at retail on or before November 30, 2020.

(7) Large forced-air furnace models that are certified under CSA B415.1–10 (IBR, see § 60.17), by an EPA approved third-party certifier, to meet the 2017 particulate matter emission level will be automatically deemed to have a certificate of compliance for the 2017 particulate matter emission standards and be valid until the effective date of the 2020 particulate matter emission standards in § 60.5474. However, a model line, manufactured or imported on or before May 15, 2020, with a certificate of compliance for the 2017 emission standards that was in effect as of May 15, 2020, may be sold at retail on or before November 30, 2020.

* * * * *

(h) *Certification period.* Unless revoked sooner by the Administrator, a certificate of compliance will be valid for 5 years from the date of issuance or until a more stringent standard comes into effect, whichever is sooner. However, a model line, manufactured or imported on or before May 15, 2020, with a certificate of compliance for the applicable 2015, 2016, or 2017 emission standards that was in effect as of May 15, 2020, may be sold at retail on or before November 30, 2020.

* * * * *

[FR Doc. 2020–11096 Filed 5–21–20; 8:45 am]

BILLING CODE 6560–50–P

ENVIRONMENTAL PROTECTION AGENCY

40 CFR Part 180

[EPA–HQ–OPP–2013–0219; FRL–10008–87]

RIN 2070–ZA16

Dipropylene Glycol and Triethylene Glycol; Exemption From the Requirement of a Pesticide Tolerance

AGENCY: Environmental Protection Agency (EPA).

ACTION: Proposed rule.

SUMMARY: EPA is proposing to exempt residues of the antimicrobial pesticide ingredients dipropylene glycol and triethylene glycol from the requirement of a tolerance when used on or applied to food-contact surfaces in public eating places, dairy-processing equipment, and food-processing equipment and utensils. This rulemaking is proposed on the Agency's own initiative under the Federal Food, Drug, and Cosmetic Act (FFDCA) to address residues identified as part of the Agency's registration review program under the Federal Insecticide, Fungicide, and Rodenticide Act (FIFRA).

DATES: Comments must be received on or before July 21, 2020.

ADDRESSES: Submit your comments, identified by docket identification (ID) numbers EPA–HQ–OPP–2013–0219 and EPA–HQ–OPP–2013–0218 by one of the following methods:

- *Federal eRulemaking Portal: http://www.regulations.gov.* Follow the online instructions for submitting comments. Do not submit electronically any information you consider to be Confidential Business Information (CBI) or other information whose disclosure is restricted by statute.
- *Mail:* OPP Docket, Environmental Protection Agency Docket Center (EPA/DC), (28221T), 1200 Pennsylvania Ave. NW, Washington, DC 20460–0001.
- *Hand Delivery:* To make special arrangements for hand delivery or delivery of boxed information, please follow the instructions at *http://www.epa.gov/dockets/contacts.html.*

Additional instructions on commenting or visiting the docket, along with more information about dockets generally, is available at *http://www.epa.gov/dockets.*

FOR FURTHER INFORMATION CONTACT: Anita Pease, Antimicrobials Division (7508P), Office of Pesticide Programs, Environmental Protection Agency, 1200 Pennsylvania Ave. NW, Washington, DC 20460–0001; telephone number: 703–305–0392; email address: *Pease.Anita@epa.gov.*

SUPPLEMENTARY INFORMATION:

I. General Information

A. Does this action apply to me?

You may be potentially affected by this action if you are pesticide manufacturer. The following list of North American Industrial Classification System (NAICS) codes is not intended to be exhaustive, but rather provides a guide to help readers determine whether this document applies to them. Potentially affected entities may include:

- Crop production (NAICS code 111).
- Animal production (NAICS code 112).
- Food manufacturing (NAICS code 311).
- Pesticide manufacturing (NAICS code 32532).

B. What should I consider as I prepare my comments for EPA?

1. *Submitting CBI.* Do not submit this information to EPA through *regulations.gov* or email. Clearly mark the part or all of the information that you claim to be CBI. For CBI information in a disk or CD–ROM that you mail to EPA, mark the outside of the disk or CD–ROM as CBI and then identify electronically within the disk or CD–ROM the specific information that is claimed as CBI. In addition to one complete version of the comment that includes information claimed as CBI, a copy of the comment that does not contain the information claimed as CBI must be submitted for inclusion in the public docket. Information so marked will not be disclosed except in accordance with procedures set forth in 40 CFR part 2.

2. *Tips for preparing your comments.* When preparing and submitting your comments, see the commenting tips at *http://www.epa.gov/dockets/comments.html.*

II. Background

A. What action is the Agency taking?

EPA is proposing to establish an exemption from the requirement of a tolerance for residues of the antimicrobial pesticides dipropylene glycol and triethylene glycol on food-contact surfaces in public eating places, dairy-processing equipment, and food-processing equipment and utensils. EPA is proposing this exemption to cover residues of dipropylene glycol and triethylene glycol that may be found in food as a result of the use of these antimicrobials on food-contact surfaces.

As noted in the December 2017, *Propylene Glycol, Dipropylene Glycol and Triethylene Glycol Interim Registration Review Decision (''Glycol Interim Decision'')* (available at *http://www.regulations.gov* in docket ID numbers EPA–HQ–OPP–2013–0219 and EPA–HQ–OPP–2013–0218), dipropylene glycol and triethylene glycol are registered for use as disinfectants on food-contact surfaces in public eating places, dairy-processing equipment, and food-processing equipment and utensils. As a result of that use, residues of dipropylene glycol and triethylene glycol may be found in food that comes into contact with treated surfaces.

According to the Agency's 2016 Antimicrobial Use Site Index (*https://www.epa.gov/pesticide-registration/antimicrobial-pesticide-use-site-index*), EPA categorizes that use as an ''indirect food use.'' 40 CFR 158W requires a tolerance or exemption for direct and indirect food uses. Historically, EPA did not require a tolerance or tolerance exemption for the registered uses of dipropylene glycol and triethylene glycol because the labels required a potable water rinse after application. EPA's scientific assumption had been that if an antimicrobial pesticide use required a potable water rinse on the label, residues of the pesticide would be rinsed away. With no residues available to transfer to foods coming into contact with the treated food surface, the use was considered nonfood, and no tolerance or tolerance exemption was needed. That presumption of no available residues for transfer is no longer supportable because available data now suggests that a potable water rinse may not be 100% efficient in removing residues; therefore, the Agency no longer considers a use to be ''nonfood'' just because the label requires a potable water rinse. Absent information supporting a conclusion that no residues would be available for transfer to food from the use, a tolerance or tolerance exemption is required. As of this time, the Agency has not received any information supporting a conclusion that residues of dipropylene glycol and triethylene glycol would not be available for transfer to food after application to food surfaces.

B. What is the Agency's authority for taking this action?

A ''tolerance'' represents the maximum level for residues of pesticide chemicals legally allowed in or on raw agricultural commodities and processed foods. Section 408 of FFDCA, 21 U.S.C. 346(a), authorizes the establishment of tolerances, exemptions from tolerance requirements, modifications in tolerances, and revocation of tolerances for residues of pesticide chemicals in or on raw agricultural commodities and processed foods. Without a tolerance or exemption, food containing pesticide residues are considered unsafe and therefore ''adulterated'' under FFDCA section 402(a), 21 U.S.C. 342(a). Such food may not be distributed in interstate commerce, 21 U.S.C. 331(a).

Section 408(e)(1)(B) of the FFDCA authorizes EPA to issue an exemption from the requirement of a tolerance on its own initiative. 21 U.S.C.

346a(e)(1)(B). It is under section 408(e) of the FFDCA that EPA is proposing to establish the exemption in this rulemaking. The standard for establishing an exemption is found in section 408(c)(2)(A) of the FFDCA and is discussed below. 21 U.S.C. 346a(c)(2)(A).

III. Aggregate Risk Assessment and Determination of Safety

Section 408(c)(2)(A)(i) of FFDCA allows EPA to establish an exemption from the requirement of a tolerance (the legal limit for a pesticide chemical residue in or on a food) only if EPA determines that the tolerance is ''safe.'' Section 408(c)(2)(A)(ii) of FFDCA defines ''safe'' to mean that ''there is a reasonable certainty that no harm will result from aggregate exposure to the pesticide chemical residue, including all anticipated dietary exposures and all other exposures for which there is reliable information.'' This includes exposure through drinking water and in residential settings but does not include occupational exposure. Section 408(c)(2)(B) requires EPA to take into account, among other things, the considerations set forth in section 408(b)(2)(C) and (D). Specifically, section 408(b)(2)(C) of FFDCA requires EPA to give special consideration to exposure of infants and children to the pesticide chemical residue in establishing a tolerance and to ''ensure that there is a reasonable certainty that no harm will result to infants and children from aggregate exposure to the pesticide chemical residue . . . .''

Consistent with FFDCA section 408(b)(2)(D), EPA has reviewed the available scientific data and other relevant information in support of this action. EPA has sufficient data to assess the hazards of and to make a determination on aggregate exposure to support the establishment of exemptions from the requirement of a tolerance for residues of dipropylene glycol and triethylene glycol.

As noted in the *Glycol Interim Decision,* there is no evidence of adverse effects for dipropylene and triethylene glycol in the toxicity database; therefore, EPA did not identify any toxicological endpoints of concern for assessing risk. Although the current uses have the potential to result in exposure to residues of dipropylene and triethylene glycol in or on food, including uses of these chemicals as inert ingredients, the low order of toxicity and low application rates from the current uses of these chemicals support a conclusion that exemptions from the requirement of a tolerance for these pesticide chemicals when used in antimicrobial formulations on food-contact surfaces in public eating places, on dairy-processing equipment, and on food-processing equipment and utensils would be safe. Based on the low order of toxicity and low exposure levels, EPA concludes that there is a reasonable certainty that no harm will result to the U.S. population, including all subpopulation groups, from aggregate exposure to dipropylene glycol or triethylene glycol. For further information, the *Glycol Interim Decision* can be found at *https://www.regulations.gov* in docket identification numbers EPA–HQ–OPP–2013–0218 (propylene and dipropylene glycol) and EPA–HQ–OPP–2013–0219 (triethylene glycol).

IV. Analytical Enforcement Methodology

An analytical method for residue is not needed. Due to the lack of risk, EPA is establishing exemptions without limits for dipropylene glycol and triethylene glycol; therefore, measuring residues of dipropylene glycol and triethylene glycol is not necessary.

V. Conclusion

Therefore, EPA is proposing to establish an exemption from the requirement of a tolerance for residues of dipropylene glycol and triethylene glycol when used in antimicrobial formulations applied to food-contact surfaces in public eating places, dairy-processing equipment, and food-processing equipment and utensils.

IV. Statutory and Executive Order Reviews

In this document, EPA is proposing to establish exemptions from the requirement of a tolerance under FFDCA section 408(e). The Office of Management and Budget (OMB) has exempted these types of actions from review under Executive Order 12866, entitled ''Regulatory Planning and Review'' (58 FR 51735, October 4, 1993). Because this proposed rule has been exempted from review under Executive Order 12866 due to its lack of significance, this proposed rule is not subject to Executive Order 13211, entitled ''Actions Concerning Regulations That Significantly Affect Energy Supply, Distribution, or Use'' (66 FR 28355, May 22, 2001), nor is it subject to Executive Order 13771, entitled ''Reducing Regulations and Controlling Regulatory Costs'' (82 FR 9339, February 3, 2017). This proposed rule does not contain any information collections subject to OMB approval under the Paperwork Reduction Act (PRA) (44 U.S.C. 3501 *et seq.*), or impose any enforceable duty or contain any unfunded mandate as described under Title II of the Unfunded Mandates Reform Act (UMRA) (2 U.S.C. 1501 *et seq.*). Nor does it require any special considerations as required by Executive Order 12898, entitled ''Federal Actions to Address Environmental Justice in Minority Populations and Low-Income Populations'' (59 FR 7629, February 16, 1994); or OMB review or any other Agency action under Executive Order 13045, entitled ''Protection of Children from Environmental Health Risks and Safety Risks'' (62 FR 19885, April 23, 1997). This proposed rule does not involve any technical standards that would require Agency consideration of voluntary consensus standards pursuant to section 12(d) of the National Technology Transfer and Advancement Act (NTTAA) (15 U.S.C. 272 note).

Pursuant to the Regulatory Flexibility Act (RFA) (5 U.S.C. 601 *et seq.*), the Agency previously assessed whether establishment of tolerances, exemptions from tolerances, raising of tolerance levels, expansion of exemptions, or revocations might significantly impact a substantial number of small entities and concluded that, as a general matter, these actions do not impose a significant economic impact on a substantial number of small entities. These analyses for tolerance establishments and modifications, and for tolerance revocations were published in the **Federal Register** of May 4, 1981 (46 FR 24950) and December 17, 1997 (62 FR 66020) (FRL–5753–1), respectively, and were provided to the Chief Counsel for Advocacy of the Small Business Administration. Taking into account this analysis, and available information concerning the pesticides listed in this proposed rule, the Agency hereby certifies that this proposed rule will not have a significant negative economic impact on a substantial number of small entities. Furthermore, for the pesticides named in this proposed rule, the Agency knows of no extraordinary circumstances that exist as to the present proposed rule that would change EPA's previous analysis. Any comments about the Agency's determination should be submitted to the EPA along with comments on the proposed rule and will be addressed prior to issuing a final rule.

In addition, the Agency has determined that this proposed rule will not have a substantial direct effect on States, on the relationship between the national government and the States, or on the distribution of power and responsibilities among the various levels of government, as specified in Executive Order 13132, entitled

''Federalism'' (64 FR 43255, August 10, 1999). Executive Order 13132 requires EPA to develop an accountable process to ensure ''meaningful and timely input by State and local officials in the development of regulatory policies that have federalism implications.'' ''Policies that have federalism implications'' is defined in the Executive order to include regulations that have ''substantial direct effects on the States, on the relationship between the national government and the States, or on the distribution of power and responsibilities among the various levels of government.'' This proposed rule directly regulates growers, food processors, food handlers, and food retailers, not States. This proposed rule does not alter the relationships or distribution of power and responsibilities established by Congress in the preemption provisions of FFDCA section 408(n)(4). For these same reasons, the Agency has determined that this proposed rule does not have any ''tribal implications'' as described in Executive Order 13175, entitled ''Consultation and Coordination with Indian Tribal Governments'' (65 FR 67249, November 9, 2000). Executive Order 13175 requires EPA to develop an accountable process to ensure ''meaningful and timely input by tribal officials in the development of regulatory policies that have tribal implications.'' ''Policies that have tribal implications'' is defined in the Executive order to include regulations that have ''substantial direct effects on one or more Indian tribes, on the relationship between the Federal Government and the Indian tribes, or on the distribution of power and responsibilities between the Federal Government and Indian tribes.'' This proposed rule will not have substantial direct effects on tribal governments, on the relationship between the Federal Government and Indian tribes, or on the distribution of power and responsibilities between the Federal Government and Indian tribes, as specified in Executive Order 13175. Thus, Executive Order 13175 does not apply to this proposed rule.

List of Subjects in 40 CFR Part 180

Environmental protection, Administrative practice and procedure, Agricultural commodities, Pesticides and pests, Reporting and recordkeeping requirements.

Dated: May 3, 2020.

Richard Keigwin,

Director, Office of Pesticide Programs.

Therefore, it is proposed that 40 CFR chapter I be amended as follows:

PART 180—AMENDED

■ 1. The authority citation for part 180 continues to read as follows:

Authority: 21 U.S.C. 321(q), 346a and 371.

■ 2. Revise § 180.940 to add alphabetically the entries of ''Dipropylene glycol'' and ''Triethylene glycol'' in the table in paragraph (a) to read as follows:

§ 180.940 Tolerance exemptions for active and inert ingredients for use in antimicrobial formulations (Food-contact surface sanitizing solutions).

* * * * *

(a)

* * * * *

Pesticide chemical	CAS Reg. No.	Limits
* * * *	*	* *
Dipropylene glycol	25265–71–8	None.
* * * *	*	* *
Triethylene glycol	112–27–6	None.
* * * *	*	* *

[FR Doc. 2020–10805 Filed 5–21–20; 8:45 am]

BILLING CODE 6560–50–P

ENVIRONMENTAL PROTECTION AGENCY

40 CFR Part 228

[EPA–R04–OW–2020–0056; FRL–10009–50–Region 4]

Ocean Dumping: Reopening of Comment Period for Modification of an Ocean Dredged Material Disposal Site Offshore of Port Everglades, Florida

AGENCY: Environmental Protection Agency (EPA).

ACTION: Reopening of public comment period for proposed rule.

SUMMARY: The Environmental Protection Agency (EPA) is reopening the comment period for a proposed rulemaking notice published in the **Federal Register** on March 13, 2020, which proposed modification of the existing EPA designated ocean dredged material disposal site (ODMDS) offshore of Port Everglades, Florida (referred to hereafter as the existing Port Everglades ODMDS) pursuant to the Marine Protection, Research and Sanctuaries Act, as amended (MPRSA). The primary purpose for the site modification is to enlarge the ODMDS to serve the long-term need for a location to dispose of suitable material dredged from the Port Everglades Harbor and for the disposal of suitable dredged material for persons who receive a MPRSA permit for such disposal. The modified ODMDS will be subject to monitoring and management to ensure continued protection of the marine environment.

DATES: Comments on the proposed rule published on March 13, 2020 (85 FR 14622) must be received on or before June 22, 2020.

ADDRESSES: Submit your comments, identified by Docket ID No. EPA–R04–OW–2020–0056, by one of the following methods:

- *www.regulations.gov:* Follow the on-line instructions for submitting comments and accessing the docket and materials related to this proposed rule.
- *Email: OceanDumpingR4@epa.gov.*
- *Mail:* Wade Lehmann, U.S. Environmental Protection Agency, Region 4, Water Division, Oceans and Estuarine Management Section, 61 Forsyth Street, Atlanta, Georgia 30303.

Instructions: Direct your comments to Docket ID No. EPA–R04–OW–2020–0056. The EPA's policy is that all comments received will be included in the public docket without change and may be made available online at *www.regulations.gov,* including any personal information provided, unless the comment includes information claimed to be Confidential Business Information (CBI) or other information whose disclosure is restricted by statute. Do not submit through *www.regulations.gov* or email, information that you consider to be CBI or otherwise protected. The

www.regulations.gov website is an ''anonymous access'' system, which means the EPA will not know your identity or contact information unless you provide it in the body of your comment. If you send an email comment directly to the EPA without going through *www.regulations.gov,* your email address will be automatically captured and included as part of the comment that is placed in the public docket and made available on the internet. If you submit an electronic comment, the EPA recommends that you include your name and other contact information in the body of your comment and with any disk or CD–ROM you submit. If the EPA cannot read your comment due to technical difficulties and cannot contact you for clarification, the EPA may not be able to consider your comment. Electronic files should avoid the use of special characters, any form of encryption, and be free of any defects or viruses. For additional information about the EPA's public docket, visit the EPA Docket Center homepage at *http://www.epa.gov/epahome/dockets.htm.*

Docket: Publicly available docket materials are available either electronically at *www.regulations.gov* or in hard copy during normal business hours from the regional library at the EPA, Region 4 Library, 9th Floor, 61 Forsyth Street, Atlanta, Georgia 30303. For access to the documents at the Region 4 Library, contact the Region 4 Library Reference Desk at (404) 562–8190, between the hours of 9:00 a.m. to 12:00 p.m., and between the hours of 1:00 p.m. to 4:00 p.m., Monday through Friday, excluding Federal holidays, for an appointment.

FOR FURTHER INFORMATION CONTACT: Wade Lehmann, U.S. Environmental Protection Agency, Region 4, Water Division, Oceans and Estuarine Management Section, 61 Forsyth Street, Atlanta, Georgia 30303; phone number (404) 562–8082; email: *Lehmann.Wade@epa.gov.*

SUPPLEMENTARY INFORMATION: The EPA published a proposed rulemaking on March 13, 2020 (85 FR 14622), which was a proposal to expand the Port Everglades ODMDS. Additionally, the EPA released on March 13, 2020, and will re-release concurrent with this notice, a draft Environmental Assessment (EA) including a draft Site Monitoring and Management Plan (appendix to the EA) for comment. The draft EA is available on the EPA Region 4 web page, which may be accessed at: *https://www.epa.gov/aboutepa/about-epa-region-4-southeast#Public%20Notices.* The EPA is reopening the comment period for an additional 30 days on all associated documents.

List of Subjects in 40 CFR Part 228

Environmental protection, Water pollution control.

Authority: This action is issued under the authority of Section 102 of the Marine Protection, Research, and Sanctuaries Act, as amended, 33 U.S.C. 1412.

Mary Walker,

Regional Administrator, EPA Region 4.

[FR Doc. 2020–10588 Filed 5–21–20; 8:45 am]

BILLING CODE 6560–50–P

FEDERAL COMMUNICATIONS COMMISSION

47 CFR Part 54

[WC Docket Nos. 18–213 and 20–89; Report No. 3147; FRS 16759]

Petitions for Reconsideration of Action in Proceedings

AGENCY: Federal Communications Commission.

ACTION: Petitions for Reconsideration.

SUMMARY: Petitions for Reconsideration (Petitions) have been filed in the Commission's proceeding by Ashley B. Thompson, on behalf of American Hospital Association and Roxanne Yaghoubi, on behalf of American Dental Association.

DATES: Oppositions to the Petitions must be filed on or before June 8, 2020. Replies to an opposition must be filed on or before June 16, 2020.

ADDRESSES: Federal Communications Commission, 445 12th Street SW, Washington, DC 20554.

FOR FURTHER INFORMATION CONTACT: Joseph Schlingbaum, Wireline Competition Bureau, Telecommunications Access Policy Division, (202) 418–7400.

SUPPLEMENTARY INFORMATION: This is a summary of the Commission's document, Report No. 3147, released May 8, 2020. Petitions may be accessed online via the Commission's Electronic Comment Filing System at: *http://apps.fcc.gov/ecfs/.* The Commission will not send a Congressional Review Act (CRA) submission to Congress or the Government Accountability Office pursuant to the CRA, 5 U.S.C. because no rules are being adopted by the Commission.

Subject: Promoting Telehealth for Low-Income Consumers; COVID–19 Telehealth Program, FCC 20–44, published at 85 FR 19892, April 9, 2020 in WC Docket Nos. 18–213 and 20–89. This document is being published pursuant to 47 CFR 1.429(e). *See also* 47 CFR 1.4(b)(1) and 1.429(f), (g).

Number of Petitions Filed: 2.

Federal Communications Commission.

Marlene Dortch,

Secretary, Office of the Secretary.

[FR Doc. 2020–10534 Filed 5–21–20; 8:45 am]

BILLING CODE 6712–01–P

Notices

Federal Register
Vol. 85, No. 100
Friday, May 22, 2020

This section of the FEDERAL REGISTER contains documents other than rules or proposed rules that are applicable to the public. Notices of hearings and investigations, committee meetings, agency decisions and rulings, delegations of authority, filing of petitions and applications and agency statements of organization and functions are examples of documents appearing in this section.

JUDICIAL CONFERENCE OF THE UNITED STATES

Committee on Rules of Practice and Procedure; Meeting of the Judicial Conference

AGENCY: Judicial Conference of the United States Committee on Rules of Practice and Procedure,

ACTION: Revised Notice of Open Meeting.

SUMMARY: The Committee on Rules of Practice and Procedure will hold a remote meeting on June 23, 2020. The meeting will be open to public via telephonic conference for listening but not participation. An agenda and supporting materials will be posted at least 7 days in advance of the meeting at: http://www.uscourts.gov/rules-policies/records-and-archives-rules-committees/agenda-books. The announcement for this meeting was previously published in 85 FR 14247.

DATES: June 23, 2020.

TIME: 10:00 a.m.–5:00 p.m.

ADDRESSES: N/A.

FOR FURTHER INFORMATION CONTACT: Rebecca A. Womeldorf, Secretary, Committee on Rules of Practice and Procedure of the Judicial Conference of the United States, Thurgood Marshall Federal Judiciary Building, One Columbus Circle NE, Suite 7–300, Washington, DC 20544, Telephone (202) 502–1820, *RulesCommittee_Secretary@ao.uscourts.gov.*

Authority: 28 U.S.C. 2073.

Dated: May 19, 2020.

Rebecca A. Womeldorf,

Secretary, Committee on Rules of Practice and Procedure, Judicial Conference of the United States.

[FR Doc. 2020–11112 Filed 5–21–20; 8:45 am]

BILLING CODE 2210–55–P

DEPARTMENT OF AGRICULTURE

Animal and Plant Health Inspection Service

[Docket No. APHIS–2020–0039]

Notice of Request for Extension of Approval of an Information Collection; Environmental Monitoring

AGENCY: Animal and Plant Health Inspection Service, USDA.

ACTION: Extension of approval of an information collection; comment request.

SUMMARY: In accordance with the Paperwork Reduction Act of 1995, this notice announces the Animal and Plant Health Inspection Service's intention to request an extension of approval of an information collection associated with environmental monitoring.

DATES: We will consider all comments that we receive on or before July 21, 2020.

ADDRESSES: You may submit comments by either of the following methods:

- *Federal eRulemaking Portal:* Go to *http://www.regulations.gov/#!docketDetail;D=APHIS-2020-0039.*
- *Postal Mail/Commercial Delivery:* Send your comment to Docket No. APHIS–2020–0039, Regulatory Analysis and Development, PPD, APHIS, Station 3A–03.8, 4700 River Road Unit 118, Riverdale, MD 20737–1238.

Supporting documents and any comments we receive on this docket may be viewed at *http://www.regulations.gov/#!docketDetail;D=APHIS-2020-0039* or in our reading room, which is located in Room 1141 of the USDA South Building, 14th Street and Independence Avenue SW, Washington, DC. Normal reading Room hours are 8 a.m. to 4:30 p.m., Monday through Friday, except holidays. To be sure someone is there to help you, please call (202) 799–7039 before coming.

FOR FURTHER INFORMATION CONTACT: For information on environmental monitoring, contact Dr. Robert Baca, Assistant Director, Permitting and Compliance Coordination, Compliance and Environmental Coordination Branch, PPQ, APHIS, 4700 River Road Unit 150, Riverdale, MD 20737; (301) 851–2292. For information on the information collection process, contact Mr. Joseph Moxey, APHIS' Information Collection Coordinator, at (301) 851–2483.

SUPPLEMENTARY INFORMATION:

Title: Environmental Monitoring.

OMB Control Number: 0579–0117.

Type of Request: Extension of approval of an information collection.

Abstract: The mission of the Animal and Plant Health Inspection Service (APHIS) of the U.S. Department of Agriculture (USDA) is to provide leadership in ensuring the health and care of animals and plants, improve agricultural productivity and competitiveness, and contribute to the national economy and the public health.

APHIS is committed to accomplishing its mission in a manner that promotes and protects the integrity of the environment. This includes APHIS' compliance with all applicable environmental statutes and regulations, including the National Environmental Policy Act (NEPA, 42 U.S.C. 4321 *et seq.*), the regulations of the Council on Environmental Quality implementing the procedural provisions of NEPA (40 CFR parts 1500 through 1508), USDA regulations implementing NEPA (7 CFR part 1b), and APHIS' NEPA Implementing Procedures (7 CFR part 372). APHIS engages in environmental monitoring for certain activities that we conduct to control or eradicate certain pests and diseases. We monitor those activities that have the greatest potential for harm to the human environment to ensure that the mitigation measures developed to avoid that harm are enforced and effective. In many cases, monitoring is required where APHIS programs are conducted close to habitats of endangered and threatened species. This monitoring is developed in coordination with the Department of the Interior's U.S. Fish and Wildlife Service, in compliance with the Endangered Species Act (50 U.S.C. 17.11 and 17.12).

APHIS field personnel and State cooperators jointly use an APHIS-provided environmental monitoring form to collect information concerning the effects of pesticide use in these sensitive areas. The goal of environmental monitoring is to track the potential impact that APHIS activities may have on the environment and to use this knowledge in making any necessary adjustments in future program actions.

We are asking the Office of Management and Budget (OMB) to

approve our use of this information collection activity for an additional 3 years.

The purpose of this notice is to solicit comments from the public (as well as affected agencies) concerning our information collection. These comments will help us:

(1) Evaluate whether the collection of information is necessary for the proper performance of the functions of the Agency, including whether the information will have practical utility;

(2) Evaluate the accuracy of our estimate of the burden of the collection of information, including the validity of the methodology and assumptions used;

(3) Enhance the quality, utility, and clarity of the information to be collected; and

(4) Minimize the burden of the collection of information on those who are to respond, through use, as appropriate, of automated, electronic, mechanical, and other collection technologies; *e.g.,* permitting electronic submission of responses.

Estimate of burden: The public burden for this collection of information is estimated to average 0.50 hours per response.

Respondents: Growers, pesticide appliers, and State department of agriculture personnel.

Estimated annual number of respondents: 110.

Estimated annual number of responses per respondent: 20.

Estimated annual number of responses: 2,200.

Estimated total annual burden on respondents: 1,100 hours. (Due to averaging, the total annual burden hours may not equal the product of the annual number of responses multiplied by the reporting burden per response.)

All responses to this notice will be summarized and included in the request for OMB approval. All comments will also become a matter of public record.

Done in Washington, DC, this 19th day of May 2020.

Michael Watson,

Acting Administrator, Animal and Plant Health Inspection Service.

[FR Doc. 2020–11076 Filed 5–21–20; 8:45 am]

BILLING CODE 3410–34–P

DEPARTMENT OF AGRICULTURE

Animal and Plant Health Inspection Service

[Docket No. APHIS–2020–0027]

Notice of Request for Reinstatement of an Information Collection; Conditions for Payment of Avian Influenza Indemnity Claims

ACTION: Reinstatement of an information collection; comment request.

SUMMARY: In accordance with the Paperwork Reduction Act of 1995, this notice announces the Animal and Plant Health Inspection Service's intention to request the reinstatement of an information collection associated with the regulations for payment of avian influenza indemnity claims.

DATES: We will consider all comments that we receive on or before July 21, 2020.

ADDRESSES: You may submit comments by either of the following methods:

- *Federal eRulemaking Portal:* Go to *http://www.regulations.gov/#!docket Detail;D=APHIS-2020-0027.*
- *Postal Mail/Commercial Delivery:* Send your comment to Docket No. APHIS–2020–0027, Regulatory Analysis and Development, PPD, APHIS, Station 3A–03.8, 4700 River Road Unit 118, Riverdale, MD 20737–1238.

Supporting documents and any comments we receive on this docket may be viewed at *http:// www.regulations.gov/#!docket Detail;D=APHIS-2020-0027* or in our reading room, which is located in Room 1141 of the USDA South Building, 14th Street and Independence Avenue SW, Washington, DC. Normal reading room hours are 8 a.m. to 4:30 p.m., Monday through Friday, except holidays. To be sure someone is there to help you, please call (202) 799–7039 before coming.

FOR FURTHER INFORMATION CONTACT: For information on the regulations related to avian influenza indemnity, contact Dr. Elena Behnke, Senior Coordinator, National Poultry Improvement Plan, Veterinary Services, APHIS, 1506 Klondike Road SW, Suite 101, Conyers, GA 30094; (770) 922–3496; *Elena.Behnke@usda.gov.* Alternatively, contact Dr. Patricia Fox-Turner, National Epidemiology Officer—Avian Health, Veterinary Services, APHIS, 6 Thorn Brook Court, Durham, NC 27703; (919) 855–7258; *patricia.e.fox@ usda.gov.* For further information on the information collection process, contact Mr. Joseph Moxey, APHIS Information Collection Coordinator, at (301) 851–2483.

SUPPLEMENTARY INFORMATION:

Title: Conditions for Payment of Avian Influenza Indemnity Claims.

OMB Control Number: 0579–0440.

Type of Request: Reinstatement of an information collection.

Abstract: The Animal Health Protection Act of 2002 (7 U.S.C. 8301 *et seq.*) is the primary Federal law governing the protection of animal health. The law gives the Secretary of Agriculture broad authority to detect, control, or eradicate pests or diseases of livestock or poultry. The Secretary may also prohibit or restrict import or export of any animal or related material if necessary to prevent the spread of any livestock or poultry pest or disease.

U.S. animal health policy calls for elimination of the avian influenza virus (both highly pathogenic and low pathogenicity strains) when found through depopulation (*i.e.,* euthanasia and disposal) of affected poultry. The Animal and Plant Health Inspection Service (APHIS) works with State and local animal health officials to euthanize poultry, clean and disinfect premises and equipment, and test for elimination of the virus to ensure that farms can be safely restocked. To accomplish this, APHIS Veterinary Services assists State and local animal health officials and poultry producers with creating and applying biosecurity and response plans, developing and enforcing flock plans and compliance agreements, preparing and processing appraisal and indemnity claims and worksheets, developing restocking and testing agreements, and submitting reports.

This information collection was previously titled ''Conditions for Payment of Highly Pathogenic Avian Influenza Indemnity Claims''. We are changing the name to ''Conditions for Payment of Avian Influenza Indemnity Claims''.

We are asking the Office of Management and Budget (OMB) to approve our use of these information collection activities, as described, for 3 years.

The purpose of this notice is to solicit comments from the public (as well as affected agencies) concerning our information collection. These comments will help us:

(1) Evaluate whether the collection of information is necessary for the proper performance of the functions of the Agency, including whether the information will have practical utility;

(2) Evaluate the accuracy of our estimate of the burden of the collection

of information, including the validity of the methodology and assumptions used;

(3) Enhance the quality, utility, and clarity of the information to be collected; and

(4) Minimize the burden of the collection of information on those who are to respond, through use, as appropriate, of automated, electronic, mechanical, and other collection technologies; *e.g.,* permitting electronic submission of responses.

Estimate of burden: The public burden for this collection of information is estimated to average 2.5 hours per response.

Respondents: State and local animal health officials and poultry producers.

Estimated annual number of respondents: 18,950.

Estimated annual number of responses per respondent: 1.

Estimated annual number of responses: 19,763.

Estimated total annual burden on respondents: 48,714 hours. (Due to averaging, the total annual burden hours may not equal the product of the annual number of responses multiplied by the reporting burden per response.)

All responses to this notice will be summarized and included in the request for OMB approval. All comments will also become a matter of public record.

Done in Washington, DC, this 19th day of May 2020.

Michael Watson,

Acting Administrator, Animal and Plant Health Inspection Service.

[FR Doc. 2020–11075 Filed 5–21–20; 8:45 am]

BILLING CODE 3410–34–P

DEPARTMENT OF AGRICULTURE

Animal and Plant Health Inspection Service

[Docket No. APHIS–2019–0034]

Oral Rabies Vaccine Program; Notice of Availability of Decision and Finding of No Significant Impact for the Environmental Assessment

AGENCY: Animal and Plant Health Inspection Service, USDA.

ACTION: Notice of availability.

SUMMARY: We are advising the public that the Animal and Plant Health Inspection Service has prepared a Decision and Finding of No Significant Impact for the final environmental assessment, relative to an oral rabies vaccination program in Maine, New Hampshire, New York, Ohio, Tennessee, Texas, Vermont, Virginia, and West Virginia. Based on our decision and finding of no significant impact, the Animal and Plant Health Inspection has determined that an environmental impact statement need not be prepared.

FOR FURTHER INFORMATION CONTACT: Mr. Richard Chipman, Rabies Program Coordinator, Wildlife Services, APHIS, 59 Chenell Drive, Suite 2, Concord, NH 03301; (603) 223–9623. To obtain copies of the environmental assessment and the finding of no significant impact, contact Ms. Beth Kabert, Environmental Coordinator, Wildlife Services, APHIS, 59 Chenell Drive, Suite 2, Concord, NH 03301; (908) 442–6761, email: *beth.e.kabert@usda.gov.*

SUPPLEMENTARY INFORMATION: The Wildlife Services (WS) program in the Animal and Plant Inspection Service (APHIS) cooperates with Federal agencies, State and local governments, and private individuals to research and implement the best methods of managing conflicts between wildlife and human health and safety, agriculture, property, and natural resources. Wildlife-borne diseases that can affect domestic animals and humans are among the types of conflicts that APHIS–WS addresses. Wildlife is the dominant reservoir of rabies in the United States.

Since 2011, WS has been conducting field trials to study the immunogenicity and safety of an experimental oral rabies vaccine, a human adenovirus type 5 rabies glycoprotein recombinant vaccine called ONRAB (produced by Artemis Technologies Inc., Guelph, Ontario, Canada). The field trials began in portions of West Virginia, including U.S. Department of Agriculture Forest Service National Forest System lands. Beginning in 2012, WS expanded field trials into portions of New Hampshire, New York, Ohio, Vermont, and new areas of West Virginia, including additional National Forest System lands, in order to further assess the immunogenicity of ONRAB in raccoons and skunks for raccoon rabies virus variant.

On July 9, 2019, we published in the **Federal Register** (84 FR 32700–32701, Docket No. APHIS–2019–0034) [1] a notice in which we announced the availability, for public review and comment, of an environmental assessment (EA) that examined the potential environmental impacts associated with the proposed expanded use of ONRAB vaccine-baits throughout the oral rabies vaccination (ORV) distribution zone in Maine, New Hampshire, New York, Ohio, Tennessee, Texas, Vermont, Virginia, and West Virginia.

We solicited comments on the EA for 30 days ending August 8, 2019. We received 6 comments by that date. The comments were from private individuals supporting and opposing the oral rabies vaccination program. The comments, and APHIS' responses to the comments, are presented in an appendix to the Decision and Finding of No Significant Impact (FONSI).

In the EA, we identified a number of alternatives for consideration. Our proposed alternative recommended the expanded use of ONRAB throughout the ORV zone in Maine, New Hampshire, New York, Ohio, Tennessee, Texas, Vermont, Virginia, and West Virginia. This alternative involves the continued or expanded use of Federal funds by APHIS–WS to purchase ONRAB oral vaccine baits and to participate in the distribution of vaccine baits under the authorities of the appropriate State agencies in selected areas of the States listed above to stop or prevent raccoon, gray fox, and coyote rabies, and to assist with monitoring and surveillance efforts by capturing and releasing or killing target species for the purposes of obtaining biological samples.

In this document, we are advising the public of our decision, as well as availability of a final EA and FONSI, regarding the implementation of the continued and expanded APHIS–WS ORV programs using the ONRAB wildlife rabies vaccine to eliminate or stop the spread of raccoon rabies variant in the eastern United States and prevent the reintroduction of the dog-coyote rabies variants from Mexico in the Southwestern United States, including National Forest System lands, in Maine, New Hampshire, New York, Ohio, Tennessee, Texas, Vermont, Virginia, and West Virginia. The finding, which is based on the proposed alternative in the EA, reflects our determination that the distribution of the ONRAB wildlife rabies vaccine will not have a significant impact on the quality of the human environment.

The final EA and FONSI may be viewed on the APHIS website at *https://www.aphis.usda.gov/aphis/ourfocus/wildlifedamage/programs/nepa/ct_nepa_regulations_assessments* and on the *Regulations.gov* website. Copies of the EA and FONSI are also available for public inspection at USDA, Room 1141, South Building, 14th Street and Independence Avenue SW, Washington, DC, between 8 a.m. and 4:30 p.m., Monday through Friday, except holidays. Persons wishing to inspect copies are requested to call ahead at (202) 799–7039 to facilitate entry into

[1] The EA, Decision/FONSI, and comments we received may be viewed at *https://www.regulations.gov/docket?D=APHIS-2019-0034.*

the reading room. In addition, copies may be obtained as described under **FOR FURTHER INFORMATION CONTACT**.

The EA and FONSI have been prepared in accordance with: (1) The National Environmental Policy Act of 1969 (NEPA), as amended (42 U.S.C. 4321 *et seq.*); (2) regulations of the Council on Environmental Quality for implementing the procedural provisions of NEPA (40 CFR parts 1500–1508); (3) USDA regulations implementing NEPA (7 CFR part 1b); and (4) APHIS' NEPA Implementing Procedures (7 CFR part 372).

Done in Washington, DC, this 19th day of May 2020.

Michael Watson,

Acting Administrator, Animal and Plant Health Inspection Service.

[FR Doc. 2020–11108 Filed 5–21–20; 8:45 am]

BILLING CODE 3410–34–P

DEPARTMENT OF AGRICULTURE

Forest Service

Black Hills National Forest Advisory Board; Meeting

AGENCY: Forest Service, USDA.

ACTION: Notice of meeting.

SUMMARY: The Black Hills National Forest Advisory Board (Board) will conduct a virtual meeting. The committee is established consistent with and operates in compliance with the Federal Advisory Committee Act. The purpose of the committee is to improve collaborative relationships and to provide advice and recommendations to the Secretary of Agriculture through the Black Hills National Forest Supervisor on a broad range of forest issues. Board information, including the meeting agenda and the meeting summary/minutes can be found at the following website: *https://www.fs.usda.gov/main/blackhills/workingtogether/advisory committees.*

DATES: The meeting will be held on Wednesday, June 24, 2020, at 1:00 p.m.

All meetings are subject to cancellation. For updated status of meeting prior to attendance, please contact the person listed under **FOR FURTHER INFORMATION CONTACT.**

ADDRESSES: The meeting will be held via Adobe Connect along with two conference call lines: One line will be for participants, and one line will be for the public for listen only. Detailed instructions on how to attend the meeting virtually will be sent out via email along with a news release approximately one week prior to the meeting.

Written comments may be submitted as described under **SUPPLEMENTARY INFORMATION.** All comments, including names and addresses, when provided, are placed in the record and available for public inspection and copying. The public may inspect comments received at Black Hills National Forest Supervisor's Office. Please call ahead to facilitate entry into the building.

FOR FURTHER INFORMATION CONTACT: Scott Jacobson, Committee Coordinator, by phone at 605–440–1409 or by email at *scott.j.jacobson@usda.gov.*

Individuals who use telecommunication devices for the deaf (TDD) may call the Federal Information Relay Service (FIRS) at 1–800–877–8339 between 8:00 a.m. and 8:00 p.m., Eastern Standard Time, Monday through Friday.

SUPPLEMENTARY INFORMATION: The purpose of the meeting is to discuss:

(1) Orientation Topic: Forest Plan Revision vs. Forest Plan Amendment;

(2) Mount Rushmore Fireworks;

(3) Sustainable Forest Discussion;

(4) Timber Sustainability Working Group Recommendation; and

(5) August Field Trip.

The meeting is open to the public. Individuals wishing to provide comments with regards to this meeting's agenda and for comments to be included with the meeting minutes/records, comments must be submitted in writing by June 25, 2020. Anyone who would like to bring related letters to the attention of the Board may file written statements with the Board's staff before or after the meeting. Written comments must be sent to Scott Jacobson, Black Hills National Forest Supervisor's Office, 1019 North Fifth Street, Custer, South Dakota 57730; by email to *scott.j.jacobson@usda.gov,* or via facsimile to 605–673–9208.

Meeting Accommodations: If you are a person requiring reasonable accommodation, please make requests in advance for sign language interpreting, assistive listening devices, or other reasonable accommodation. For access to the facility or proceedings, please contact the person listed in the section titled **FOR FURTHER INFORMATION CONTACT.** All reasonable accommodation requests are managed on a case-by-case basis.

Dated: May 19, 2020.

Cikena Reid,

USDA Committee Management Officer.

[FR Doc. 2020–11110 Filed 5–21–20; 8:45 am]

BILLING CODE 3411–15–P

DEPARTMENT OF AGRICULTURE

Forest Service

Collaborative Forest Restoration Program Technical Advisory Panel

AGENCY: Forest Service, USDA.

ACTION: Notice of meeting.

SUMMARY: The Collaborative Forest Restoration Program Technical Advisory Panel (Panel) will hold a virtual meeting. The Panel is established consistent with the Federal Advisory Committee Act of 1972 (FACA), and Title VI of the Community Forest Restoration Act (the Act). Additional information concerning the Panel, including the meeting summary/minutes, can be found by visiting the Panel's website at: *https://www.fs.usda.gov/main/r3/working together/grants.*

DATES: The meeting will be held on June 29–July 1, 2020 (Monday–Wednesday), with meetings each day from 9:00 a.m. to 5:00 p.m.

All meetings are subject to cancellation. For status of meeting prior to attendance, please contact the person listed under **FOR FURTHER INFORMATION CONTACT**.

ADDRESSES: The meeting will be held with virtual attendance only. For virtual meeting information, please contact the person listed under the **FOR FURTHER INFORMATION CONTACT**.

Written comments may be submitted as described under **SUPPLEMENTARY INFORMATION**. All comments, including names and addresses when provided, are placed in the record and are available for public inspection and copying. The public may inspect comments received at USDA Forest Service Region 3 Regional Office. Please call ahead to facilitate entry into the building.

FOR FURTHER INFORMATION CONTACT: Ian Fox, Designated Federal Officer, by phone at 505–842–3425 or via email at *ian.fox@usda.gov.*

Individuals who use telecommunication devices for the deaf (TDD) may call the Federal Information Relay Service (FIRS) at 1–800–877–8339 between 8:00 a.m. and 8:00 p.m., Eastern Standard Time, Monday through Friday.

SUPPLEMENTARY INFORMATION: The purpose of the meeting is to:

(1) Review Panel Bylaws, Charter, and what it means to be a Federal Advisory Committee;

(2) Evaluate and score the 2019 and 2020 CFRP grant applications to determine which applications best meet the program objectives;

(3) Develop prioritized 2019 and 2020 CFRP project funding recommendations for the Secretary;

(4) Develop an agenda and identify members for the 2020 CFRP Sub-Committee for the review of multi-party monitoring reports from completed projects; and

(5) Discuss the proposal review process used by the Panel to identify what went well and what could be improved.

The meeting is open to the public. The agenda will include time for people to make oral statements of three minutes or less. Individuals wishing to make an oral statement should request in writing by June 8, 2020, to be scheduled on the agenda. Anyone who would like to bring related matters to the attention of the committee may file written statements with the committee staff before or after the meeting. Written comments and requests for time to make oral comments must be sent to Ian Fox, Designated Federal Officer, USDA Forest Service, Region 3 Regional Office, 333 Broadway Bouleveard Southwest, Albuquerque, New Mexico 87102; or by email to *ian.fox@usda.gov.*

Meeting Accommodations: If you are a person requiring reasonable accommodation, please make requests in advance for sign language interpreting, assistive listening devices, or other reasonable accommodation. For access to the facility or proceedings, please contact the person listed in the section titled **FOR FURTHER INFORMATION CONTACT**. All reasonable accommodation requests are managed on a case-by-case basis.

Dated: May 19, 2020.

Cikena Reid,

USDA Committee Management Officer.

[FR Doc. 2020–11115 Filed 5–21–20; 8:45 am]

BILLING CODE 3411–15–P

DEPARTMENT OF AGRICULTURE

Rural Business-Cooperative Service

[Docket RBS–20–CO–OP–0011]

The Business and Industry Coronavirus Aid, Relief, and Economic Security Act (CARES Act) Guaranteed Loan Program

AGENCY: Rural Business-Cooperative Service, USDA.

ACTION: Notice of Funding Availability (NOFA).

SUMMARY: The Rural Business-Cooperative Service (RBCS), a Rural Development agency of the United States Department of Agriculture (USDA), announces that in response to the national COVID–19 Public Health Emergency, USDA Rural Development was provided additional funding assistance of $20,500,000 in budget authority appropriated under the Coronavirus Aid, Relief, and Economic Security Act (CARES Act). The Business and Industry (B&I) Guaranteed Loan Program is administered through RBCS.

DATES: Applications will be accepted beginning on May 22, 2020 and must be received no later than 11:59 p.m. Eastern Daylight Time on September 15, 2021, or until funds are expended. Program funding expires September 30, 2021.

ADDRESSES: If you wish to apply for assistance or need further information, contact the USDA Rural Development State Office in the State where your project is located. A list of USDA Rural Development State Offices and contact names are available at *http://www.rd.usda.gov.*

FOR FURTHER INFORMATION CONTACT: Mark Brodziski, Acting Administrator, Rural Business and Cooperative Service, Rural Development, U.S. Department of Agriculture, 1400 Independence Avenue SW, Stop, Washington, DC 20250–3221; email: *mark.brodziski@usda.gov;* telephone (202) 205–0903.

SUPPLEMENTARY INFORMATION:

Congressional Review Act

Pursuant to the Congressional Review Act (5 U.S.C. 801), the Office of Information and Regulatory Affairs of the Office of Management and Budget designated this action as a major rule, as defined by 5 U.S.C. 804(2) because this action will result in an annual effect on the economy of $100,000,000 or more. However, notwithstanding 5 U.S.C. 801, section 808(2) of the Congressional Review Act (5 U.S.C. 808(2)) permits that if any rule which an agency for good cause finds that notice and public procedure thereon would be impracticable, unnecessary, or contrary to the public interest, shall take effect at such time that the Agency determines. USDA has determined, under section 808(2), that making these funds available through the issuance of this NOFA, as authorized in Division B, Title I of the CARES Act, supplements existing authority implemented in 7 CFR part 4279, subparts A and B, and 7 CFR part 4287, subpart B, and find good cause that notice and public procedure would be impracticable and contrary to the public interest, in light of the national COVID–19 Public Health Emergency. Such finding is made because withholding these funds would unduly delay the provision of emergency benefits under the CARES Act, which Congress intended to provide expeditious relief to address the current economic conditions arising from the COVID–19 emergency.

Overview

Federal Agency Name: Rural Development, Rural Business-Cooperative Service.

Funding Opportunity Title: Business and Industry Guaranteed Loan Program.

Announcement Type: Notice of Funding Availability (NOFA).

Catalog of Federal Domestic Assistance (CFDA) Number: 10.768.

Dates: Applications will be accepted beginning on May 22, 2020 and must be received no later than 11:59 p.m. Eastern Daylight Time on September 15, 2021, or until funds are expended. Program funding expires September 30, 2021.

Items in Supplementary Information

I. Funding Opportunity Description
II. Federal Award Information
III. Eligibility Information
IV. Application Submission Information
V. Other Information

I. Funding Opportunity Description

A. Purpose

This NOFA is being issued pursuant to the recently passed CARES Act. The CARES Act provides for additional funds to the Agency for use under the B&I Guaranteed Loan Program. The Agency is announcing the availability of funding through the B&I Guaranteed Loan program for eligible projects as set forth in this NOFA and applies only to the award of CARES Act funds for loans made available through the B&I Guaranteed Loan Program (B&I CARES Act Guaranteed Loan Program) pursuant to this notice. These provisions do not apply to loans funded under the Appropriations Act of 2020 or any other appropriations other than the CARES Act.

Subject to remaining availability of funding for the B&I CARES Act Guaranteed Loan Program, the Agency may publish a subsequent notice which may have terms and conditions that differ from this notice. Such modifications to program terms and conditions in subsequent notice(s) may be made to more appropriately align program funding with the purposes described in this notice and the CARES Act.

B. Implementation of CARES Act Provisions

Consistent with the purposes of the CARES Act, the Agency has determined that the most effective use of these

program funds is to provide guaranteed loans to rural businesses in response to the economic conditions associated with the national COVID–19 Public Health Emergency. It is the Agency's intent that Guaranteed loan funds will be directed toward working capital loan purposes to support business operations and facilities in rural areas including agricultural producers. The amount of the B&I Cares Act Program Loan shall be based on a cash flow analysis and must not be greater than the amount needed to cure problems caused by the COVID–19 emergency.

In determining the type of enhancements that participating lenders would need to offer to generate quality loans and approve and disburse loan funds in a timely and efficient manner in these critical times, the Agency considered adjustments to several requirements of the B&I program where such adjustments can be made without compromising Agency underwriting standards. The Agency also evaluated adjustments to the program requirements in order to enable lenders greater flexibility in structuring loans in consideration of the borrowers' financial condition and capacity. For the B&I CARES Act Program, the Agency is extending loan authority to support agricultural production, simplifying the application procedures for smaller loans and adjusting program requirements regarding the maximum percentage of guarantee, the equity evaluation, the appraisal evaluation, the collateral evaluation, and the repayment terms for working capital loans.

As a result of these considerations and the funding purposes outlined in the CARES Act, the Agency decided to provide 90 percent guarantees to all CARES Act funded loans, set the guarantee fee at 2%, accept appraisals completed within two years of the date of the application, not require discounting of collateral for working capital loans, and extend the maximum term for working capital loans to 10 years.

II. Federal Award Information

A. Statutory Authority

This program is authorized under the Coronavirus Aid, Relief, and Economic Security Act (Pub. L. 116–136).

B. Catalog of Federal Domestic Assistance (CFDA) Number 10.768

C. Available Funds

The CARES Act provides $20,500,000 in budgetary authority for this program through September 30, 2021, which will support approximately $951,000,000 in loan guarantees in accordance with the credit subsidy scoring based on the provisions of this Notice. The aggregate total amount of loans for agricultural production will initially be limited to 50 percent of the total amount of program level of B&I CARES Act Program, approximately $475,500,000. The Agency may publish future notices in the **Federal Register** revising the limitation of the amount of funding made available for loans for agricultural production to align with the demand for these loans.

D. Funding Limitations

The Agency will consider applications in the order they are received by the Agency. The Agency will distribute CARES Act funds on a first-come, first-served basis; however, in the event that demand exceeds the supply of funds, it is anticipated that toward the end of the funding period the Agency will need to assign priority points for the limited remaining funds, and for this purpose the Agency will compare an application to other pending applications that are competing for funding in accordance with 7 CFR 4279.166.

III. Eligibility Information

This section of the notice identifies provisions specific to guaranteed loan applications seeking CARES Act funds. Eligibility requirements for lenders, borrowers, and projects and all other provisions of 7 CFR part 4279, subparts A and B, and 7 CFR part 4287, subpart B, apply to B&I CARES Act Program guaranteed loans unless indicated otherwise in 7 CFR 4279.190 and as follows:

A. Eligible Use of Funds

Under the provisions of 7 CFR 4279.190(c)(2), B&I CARES Act Program guaranteed loans will be limited to loans for working capital loan purposes in accordance with 7 CFR 4279.190(c)(3). Loan proceeds may be used only to support facilities and business operations, including certain agricultural producers in rural areas that were in operation on February 15, 2020. Loan proceeds must be disbursed through multiple draws on an as-needed monthly basis.

IV. Application Submission Information

A. Address To Request Application Package

Application materials may be obtained by contacting one of Rural Development State Offices, as identified via the following link: *https://www.rd.usda.gov/contact-us/state-offices.*

B. Filing Preapplications and Applications

Applications will be accepted beginning on May 22, 2020 and must be received no later than 11:59 p.m. Eastern Daylight Time on September 15, 2021, or until funds are expended. Program funding expires September 30, 2021.

V. Other Information

A. Paperwork Reduction Act

In accordance with the Paperwork Reduction Act of 1995, the information collection activities associated with this rule are covered under the Business and Industry (B&I) Guaranteed Loan Program, OMB Number: 0570–0069.

B. Nondiscrimination Statement

The U.S. Department of Agriculture (USDA) prohibits discrimination against its customers, employees, and applicants for employment on the basis of race, color, national origin, age, disability, sex, gender identity, reprisal or retaliation for prior civil rights activity, political beliefs, marital status, familial or parental status, religion, sexual orientation, income derived from any public assistance program, or protected genetic information in employment, in any program or activity conducted or funded by the Department. (Not all prohibited bases will apply to all applicants and/or employment activities.)

If you wish to file a Civil Rights program complaint of discrimination, complete the USDA Program Discrimination Complaint Form (PDF), found online at *http://www.ascr.usda.gov/complaint_filing_cust.html,* or complete the form at any USDA office, or call (866) 632–9992 to request the form. You may also write a letter containing all the information requested in the form. Send your completed complaint form or letter to us by mail at U.S. Department of Agriculture, Director, Office of Adjudication, 1400 Independence Avenue SW, Washington, DC 20250–9410, by fax (202) 690–7442 or email at *program.intake@usda.gov.*

Individuals who are deaf, hard of hearing or have speech disabilities and wish to file either an EEO or program complaint, please contact USDA through the Federal Relay Service at (800) 877–8339 or (800) 845–6136 (in Spanish).

Persons with disabilities, who wish to file a program complaint, please see information above on how to contact us directly by mail or by email. If you require alternative means of communication for program information

(*e.g.,* Braille, large print, audiotape, etc.) please contact USDA's TARGET Center at (202) 720–2600 (voice and TDD).

Bette B. Brand,

Deputy Under Secretary, Rural Development.

[FR Doc. 2020–11243 Filed 5–21–20; 8:45 am]

BILLING CODE 3410–XY–P

COMMISSION ON CIVIL RIGHTS

Notice of Public Meeting of the Utah Advisory Committee

AGENCY: U.S. Commission on Civil Rights.

ACTION: Announcement of meeting.

SUMMARY: Notice is hereby given, pursuant to the provisions of the rules and regulations of the U.S. Commission on Civil Rights (Commission) and the Federal Advisory Committee Act (FACA) that the meeting of the Utah Advisory Committee (Committee) to the Commission will be held at 12:00 p.m. (Mountain Time) Friday, June 26, 2020. The purpose of this meeting is for the Committee to review a draft of their gender wage gap report.

DATES: The meeting will be held on Friday, June 26, 2020 at 12:00 p.m. MT.

Public Call Information:
Dial: 888–204–4368.
Conference ID: 3059820.

FOR FURTHER INFORMATION CONTACT: Ana Victoria Fortes, Designated Federal Officer (DFO) at *afortes@usccr.gov* or (202) 681–0857.

SUPPLEMENTARY INFORMATION: This meeting is available to the public through the following toll-free call-in number: 888–204–4368, conference ID number: 3059820. Any interested member of the public may call this number and listen to the meeting. Callers can expect to incur charges for calls they initiate over wireless lines, and the Commission will not refund any incurred charges. Callers will incur no charge for calls they initiate over land-line connections to the toll-free telephone number. Persons with hearing impairments may also follow the proceedings by first calling the Federal Relay Service at 1–800–877–8339 and providing the Service with the conference call number and conference ID number.

Members of the public are entitled to make comments during the open period at the end of the meeting. Members of the public may also submit written comments; the comments must be received in the Regional Programs Unit within 30 days following the meeting. Written comments may be mailed to the Western Regional Office, U.S. Commission on Civil Rights, 300 North Los Angeles Street, Suite 2010, Los Angeles, CA 90012 or emailed to Ana Victoria Fortes at *afortes@usccr.gov.*

Records and documents discussed during the meeting will be available for public viewing prior to and after the meetings at *https://www.facadatabase.gov/FACA/FACAPublicViewCommitteeDetails?id=a10t0000001gzltAAA.*

Please click on the ''Committee Meetings'' tab. Records generated from these meetings may also be inspected and reproduced at the Regional Programs Unit, as they become available, both before and after the meetings. Persons interested in the work of this Committee are directed to the Commission's website, *https://www.usccr.gov,* or may contact the Regional Programs Unit at the above email or street address.

Agenda

I. Welcome
II. Approve Minutes from May 15, 2020 Meeting
III. Review Draft of Gender Wage Gap Report
  a. Findings and Recommendations
IV. Public Comment
V. Adjournment

Dated: May 18, 2020.

David Mussatt,

Supervisory Chief, Regional Programs Unit.

[FR Doc. 2020–11012 Filed 5–21–20; 8:45 am]

BILLING CODE P

DEPARTMENT OF COMMERCE

International Trade Administration

[C–570–115]

Certain Glass Containers From the People's Republic of China: Final Affirmative Countervailing Duty Determination

AGENCY: Enforcement and Compliance, International Trade Administration, Department of Commerce.

SUMMARY: The Department of Commerce (Commerce) determines that countervailable subsidies are being provided to producers and exporters of certain glass containers (glass containers) from the People's Republic of China (China).

DATES: Applicable May 22, 2020.

FOR FURTHER INFORMATION CONTACT: Maliha Khan or Stephen Bailey, AD/CVD Operations, Office IV, Enforcement and Compliance, International Trade Administration, U.S. Department of Commerce, 1401 Constitution Avenue NW, Washington, DC 20230; telephone: (202) 482–0895 or (202) 482–0193, respectively.

SUPPLEMENTARY INFORMATION:

Background

On March 2, 2020, Commerce published the *Preliminary Determination* of this investigation.[1] The petitioner is the American Glass Packaging Coalition. The mandatory respondents in this investigation are Guangdong Huaxing Glass Co. Ltd. (Guangdong Huaxing) and Qixia Changyu Glass Co. Ltd. (Qixia Changyu).

A summary of the events that occurred since Commerce published the *Preliminary Determination,* as well as a full discussion of the issues raised by parties for this final determination, are discussed in the Issues and Decision Memorandum.[2] The Issues and Decision Memorandum is a public document and is on file electronically via Enforcement and Compliance's Antidumping and Countervailing Duty Centralized Electronic Service System (ACCESS). ACCESS is available to registered users at *http://access.trade.gov.* In addition, a complete version of the Issues and Decision Memorandum can be accessed directly at *http://enforcement.trade.gov/frn/.* The signed and electronic versions of the Issues and Decision Memorandum are identical in content.

Period of Investigation

The period of investigation (POI) is from January 1, 2018 through December 31, 2018.

Scope of the Investigation

The products covered by this investigation are glass containers from China. For a complete description of the scope of this investigation, *see* Appendix I.

Scope Comments

During the course of this investigation and the concurrent less than fair value (LTFV) investigation of certain glass containers from China, Commerce received scope comments from interested parties. On April 3, 2020, Commerce issued a Preliminary Scope

[1] *See Certain Glass Containers from the People's Republic of China: Preliminary Affirmative Countervailing Duty Determination,* 85 FR 12256 (March 2, 2020) (*Preliminary Determination*) and accompanying Preliminary Decision Memorandum.

[2] *See* Memorandum, ''Issues and Decision Memorandum for the Final Determination in the Countervailing Duty Investigation of Certain Glass Containers from the People's Republic of China,'' dated concurrently, and hereby adopted by, this notice (Issues and Decision Memorandum).

Decision Memorandum.[3] Several interested parties submitted case and rebuttal briefs concerning the scope of this investigation. For a summary of the product coverage comments and rebuttal comments submitted to the record for this final determination, and accompanying discussion and analysis of all comments timely received, *see* the Final Scope Decision Memorandum.[4] Based on the comments received, Commerce is not modifying the scope language as it appeared in the *Preliminary Determination.* The scope in Appendix I remains unchanged from that which appeared in the *Preliminary Determination.*

Analysis of Subsidy Programs and Comments Received

All issues raised in the case and rebuttal briefs by parties in this investigation, other than those issues related to scope, are discussed in the Issues and Decision Memorandum. A list of the issues raised by parties and addressed in Commerce's Issues and Decision Memorandum is attached at Appendix II.

Methodology

Commerce is conducting this investigation in accordance with section 701 of the Tariff Act of 1930, as amended (the Act). For each of the subsidy programs found countervailable, Commerce determines that there is a subsidy, *i.e.,* a financial contribution by an ''authority'' that gives rise to a benefit to the recipient, and that the subsidy is specific.[5] Following the *Preliminary Determination,* and as explained in a letter to all interested parties dated March 16, 2020, during the course of this investigation, a Level 4 Travel Advisory was imposed for all of China, preventing Commerce personnel from traveling to China to conduct verification.[6] Pursuant to section 776(a)(4)(D) of the Act, in situations where information has been provided but the information cannot be verified, Commerce will use the facts otherwise available in reaching the applicable determination. Accordingly, and as Commerce explained, because Commerce was unable to proceed to verification for reasons beyond its control, Commerce has relied on the information submitted on the record, which it relied on in making its *Preliminary Determination,* as facts available in making this final determination, pursuant to section 776(a)(2)(D) of the Act.[7] In addition, in certain circumstances, Commerce has also resorted to facts available for certain aspects of its analysis, pursuant to section 776(a)(1), and (a)(2)(A)–(C) of the Act.

Furthermore, at the outset of this investigation, several companies failed to respond to Commerce's quantity and value (Q&V) questionnaire.[8] Moreover, the GOC failed to cooperate to the best of its ability in certain respects in providing information necessary to Commerce's analysis in this investigation. Because Commerce finds that certain respondents did not act to the best of their ability to respond to Commerce's requests for information, it drew an adverse inference where appropriate in selecting from among the facts otherwise available, in accordance with section 776(b) of the Act. For a description of the methodology underlying our final determination, *see* the Issues and Decision Memorandum.

Changes Since the Preliminary Determination

Based on our analysis of the comments received from parties, we made certain changes to the mandatory respondents' subsidy rate calculations set forth in the *Preliminary Determination.* For a discussion of these changes, *see* the Issues and Decision Memorandum.

All-Others Rate

In accordance with section 705(c)(5)(A) of the Act, Commerce shall determine an estimated all-others rate for companies not individually examined. Generally, under section 705(c)(5)(A)(i) of the Act, this rate shall be an amount equal to the weighted average of the estimated subsidy rates established for those companies individually examined, excluding any zero and *de minimis* rates and any rates based entirely under section 776 of the Act. However, section 705(c)(5)(A)(ii) of the Act provides that if the countervailable subsidy rates established for all companies individually examined are zero or *de minimis* rates, or are determined entirely under section 776 of the Act, then Commerce may use ''any reasonable method'' to establish an all-others rate, ''including averaging the weighted-average countervailable subsidy rates determined for the exporters and producers individually investigated.''

As explained above, all of the countervailable subsidy rates for this final determination are based on the facts otherwise available. As explained above, the mandatory respondents in this investigation, Guangdong Huaxing and Qixia Changyu, are receiving rates based entirely on the facts available. In the specific circumstances of this case, because we were unable to verify Guangdong Huaxing and Qixia Changyu because of the Level 4 Travel Advisory, we find that a reasonable method to determine the all-others rate under section 705(c)(5)(A)(ii) of the Act here is to apply a simple average of Guangdong Huaxing's and Qixia Changyu's individual estimated subsidy rates, using each company's values for the merchandise under consideration because publicly ranged sales data was unavailable.[9]

[3] *See* Memorandum, ''Certain Glass Containers from the People's Republic of China: Preliminary Scope Decision Memorandum,'' dated April 3, 2020.

[4] *See* Memorandum, ''Certain Glass Containers from the People's Republic of China: Final Scope Decision Memorandum,'' dated concurrently with this memorandum.

[5] *See* sections 771(5)(B) and (D) of the Act regarding financial contribution; section 771(5)(E) of the Act regarding benefit; and section 771(5A) of the Act regarding specificity.

[6] *See* Memorandum, ''Verification, New Subsidy and Creditworthiness Allegations,'' dated March 16, 2020.

[7] *Id.; see also* Issues and Decision Memorandum.

[8] The companies that failed to properly respond to Commerce's quantity and value questionnaire were: Cangzhou Roter Faden Glass Products, Choicest International, Guangzhou Idealpak Business, Haimen Sanlong Glass Products, Hebei Anyu Glass Products Co. Ltd., Hebei Zhengi Glass Products Co. Ltd., Huazhong Glass Co. Ltd. (Changxing), Iboya Glass, Jiangmen Zhong'an Import and Export, Jining Baolin Glass Product Co. Ltd., Kisco Trading Shanghai, Lianyungang Chinamex Trade, Linlang (Shanghai) Glass Products Co. Ltd., Ningbo Vifa International Trade Co., Qingdao Auro Pack, Rockwood & Hines (Jiaxing) Co. Ltd., Shandong Hongda Glassware Co. Ltd., Shandong Mounttai Sheng Li Yuan GLA, Shandong Wensheng Glass Technology Co. Ltd., ShangHai Misa Glass Co. Ltd., Shanghai Vista Packaging, Suzhou Yunbo Glass, Value Chain Glass Ltd. (VCG), Wheaton Glass, Wuhan Vanjoin Packaging Co. Ltd., Xiamen Cheer Imp & Exp Co. Ltd., Xuzhou Dahua Glass Products Co. Ltd., Xuzhou Fangbao Glassware, Xuzhou Huajing Glass Products, Xuzhou Livlong Glass Products Co. Ltd., Xuzhou Pretty Glass Products, Xuzhou Yanjia Glassware, Yantai NBC Glass Packaging Co. Ltd., Yuncheng Jinpeng Glass Co. Ltd., Zheijiang Industrial Minerals Foreign Trade Co Ltd., Zibo CY International Trade Co. Ltd., Zibo Regal Glassware and Zibo Rongdian Glass Co. Ltd. (collectively, the 38 non-responsive companies). We refer to these companies, collectively, as the ''non-responsive companies.''

See sections 776(a) and (b) of the Act.

[9] With two respondents under examination, Commerce normally calculates (A) a weighted-average of the estimated subsidy rates calculated for the examined respondents; (B) a simple average of the estimated subsidy rates calculated for the examined respondents; and (C) a weighted-average of the estimated subsidy rates calculated for the examined respondents using each company's publicly-ranged U.S. sale quantities for the merchandise under consideration. Commerce then compares (B) and (C) to (A) and selects the rate closest to (A) as the most appropriate rate for all other producers and exporters. *See, e.g., Ball Bearings and Parts Thereof from France, Germany, Italy, Japan, and the United Kingdom: Final Results of Antidumping Duty Administrative Reviews, Final*

Final Determination

In accordance with section 705(c)(1)(B)(i)(I) of the Act, we established individual estimated countervailable subsidy rates, as follows:

Company	Subsidy rate
Guangdong Huaxing Glass Co., Ltd.[10]	27.10
Qixia Changyu Glass Co., Ltd	25.46
Cangzhou Roter Faden Glass Products	320.53
Choicest International	320.53
Guangzhou Idealpak Business	320.53
Haimen Sanlong Glass Products	320.53
Hebei Anyu Glass Products Co. Ltd	320.53
Hebei Zhengi Glass Products Co. Ltd	320.53
Huazhong Glass Co. Ltd. (Changxing)	320.53
Iboya Glass	320.53
Jiangmen Zhong'an Import and Export	320.53
Jining Baolin Glass Product Co. Ltd	320.53
Kisco Trading Shanghai	320.53
Lianyungang Chinamex Trade	320.53
Linlang (Shanghai) Glass Products Co. Ltd	320.53
Ningbo Vifa International Trade Co	320.53
Qingdao Auro Pack	320.53
Rockwood & Hines (Jiaxing) Co. Ltd	320.53
Shandong Hongda Glassware Co. Ltd	320.53
Shandong Mounttai Sheng Li Yuan GLA	320.53
Shandong Wensheng Glass Technology Co. Ltd	320.53
ShangHai Misa Glass Co. Ltd	320.53
Shanghai Vista Packaging	320.53
Suzhou Yunbo Glass	320.53
Value Chain Glass Ltd. (VCG)	320.53
Wheaton Glass	320.53
Wuhan Vanjoin Packaging Co. Ltd	320.53
Xiamen Cheer Imp & Exp Co. Ltd	320.53
Xuzhou Dahua Glass Products Co. Ltd	320.53
Xuzhou Fangbao Glassware	320.53
Xuzhou Huajing Glass Products	320.53
Xuzhou Livlong Glass Products Co. Ltd	320.53
Xuzhou Pretty Glass Products	320.53
Xuzhou Yanjia Glassware	320.53
Yantai NBC Glass Packaging Co. Ltd	320.53
Yuncheng Jinpeng Glass Co. Ltd	320.53
Zheijiang Industrial Minerals Foreign Trade Co Ltd	320.53
Zibo CY International Trade Co. Ltd	320.53
Zibo Regal Glassware	320.53
Zibo Rongdian Glass Co. Ltd	320.53
All Others	26.28

Results of Changed-Circumstances Review, and Revocation of an Order in Part, 75 FR 53661, 53663 (September 1, 2010). As complete publicly ranged sales data was unavailable, Commerce based the all-others rate on a simple average of the mandatory respondents' rates. For a complete analysis of the data, please *see* the All-Others' Rate Calculation Memorandum.

Continuation of Suspension of Liquidation

As a result of our *Preliminary Determination,* and pursuant to sections 703(d)(1)(B) and (d)(2) of the Act, Commerce instructed U.S. Customs and Border Protection (CBP) to suspend liquidation of entries of subject merchandise under consideration from China that were entered or withdrawn from warehouse, for consumption on or after March 2, 2020, the date of publication of the *Preliminary Determination* in the **Federal Register**.

In accordance with section 705(c)(1)(B)(ii) of the Act, we are directing CBP to continue to suspend liquidation of all imports of the subject merchandise from China that are entered, or withdrawn from warehouse, for consumption on or after the date of publication of this notice in the **Federal Register**. The suspension of liquidation instructions will remain in effect until further notice. We are also directing CBP to collect cash deposit of estimated countervailing duties at the rates identified above.

If the U.S. International Trade Commission (ITC) issues a final affirmative injury determination, we will issue a CVD order and require a cash deposit of estimated countervailing duties for such entries of subject merchandise in the amounts indicated above, in accordance with section 706(a) of the Act. If the ITC determines that material injury, or threat of material injury, does not exist, this proceeding will be terminated, and all estimated duties deposited or securities posted as a result of the suspension of liquidation will be refunded or canceled.

Disclosure

Commerce intends to disclose its calculations and analysis performed in this proceeding to interested parties within five days of its public announcement, or if there is no public announcement, within five days of the date of this notice in accordance with 19 CFR 351.224(b).

[10] Guangdong Huaxing reported the following cross-owned companies, which also will receive Guangdong Huaxing's subsidy rate: Foshan Huaxing Glass Co. Ltd., Fujian Huaxing Glass Co. Ltd., Daye Huaxing Glass Co. Ltd., Hunan Huaxing Glass Co. Ltd., Guizhou Huaxing Glass Co. Ltd., Zhejiang Huaxing Glass Co. Ltd., Foshan City San Shui Hua Xing Glass Co. Ltd., Fujian Changcheng Huaxing Glass Co. Ltd., Jiangsu Huaxing Glass Co. Ltd., Hebei Huaxing Glass Co. Ltd., Henan Huaxing Glass Co Ltd., and Xinjiang Huaxing Glass Co. Ltd.

ITC Notification

In accordance with section 705(d) of the Act, Commerce will notify the ITC of its final affirmative determination that countervailable subsidies are being provided to producers and exporters of certain glass containers from China. As Commerce's final determination is affirmative, in accordance with section 705(b) of the Act, the ITC will determine, within 45 days, whether the domestic industry in the United States is materially injured, or threatened with material injury, by reason of imports of certain glass containers from China, or sales (or the likelihood of sales) for importation of certain glass containers from China. In addition, we are making available to the ITC all non-privileged and nonproprietary information related to this investigation. We will allow the ITC access to all privileged and business proprietary information in our files, provided the ITC confirms that it will not disclose such information, either publicly or under an administrative protective order (APO), without the written consent of the Assistant Secretary for Enforcement and Compliance.

Notification Regarding APO

In the event that the ITC issues a final negative injury determination, this notice will serve as the only reminder to parties subject to the APO of their responsibility concerning the destruction of proprietary information disclosed under APO in accordance with 19 CFR 351.305(a)(3). Timely written notification of the return/destruction of APO materials or conversion to judicial protective order is hereby requested. Failure to comply with the regulations and terms of an APO is a violation which is subject to sanction.

Notification to Interested Parties

This determination is issued and published pursuant to sections 705(d) and 777(i) of the Act and 19 CFR 351.210(c).

Dated: May 11, 2020.

Jeffrey I. Kessler,

Assistant Secretary for Enforcement and Compliance.

Appendix I

Scope of the Investigation

The merchandise covered by this investigation is certain glass containers with a nominal capacity of 0.059 liters (2.0 fluid ounces) up to and including 4.0 liters (135.256 fluid ounces) and an opening or mouth with a nominal outer diameter of 14 millimeters up to and including 120 millimeters. The scope includes glass jars, bottles, flasks and similar containers; with or

without their closures; whether clear or colored; and with or without design or functional enhancements (including, but not limited to, handles, embossing, labeling, or etching).

Excluded from the scope of the investigation are: (1) Glass containers made of borosilicate glass, meeting United States Pharmacopeia requirements for Type 1 pharmaceutical containers; (2) glass containers without ''mold seams,'' ''joint marks,'' or ''parting lines;'' and (3) glass containers without a ''finish'' (*i.e.,* the section of a container at the opening including the lip and ring or collar, threaded or otherwise compatible with a type of closure to seal the container's contents, including but not limited to a lid, cap, or cork).

Glass containers subject to this investigation are specified within the Harmonized Tariff Schedule of the United States (HTSUS) under subheadings 7010.90.5005, 7010.90.5009, 7010.90.5015, 7010.90.5019, 7010.90.5025, 7010.90.5029, 7010.90.5035, 7010.90.5039, 7010.90.5045, 7010.90.5049, and 7010.90.5055. The HTSUS subheadings are provided for convenience and customs purposes only. The written description of the scope of the investigation is dispositive.

Appendix II

List of Topics Discussed in the Issues and Decision Memorandum

I. Summary
II. Background
III. Scope of the Investigation
IV. Scope Comments
V. Use of Facts Otherwise Available and Adverse Inferences
VI. Subsidies Valuation Information
VII. Analysis of Programs
VIII. Analysis of Comments
IX. Recommendation

[FR Doc. 2020–11070 Filed 5–21–20; 8:45 am]

BILLING CODE 3510–DS–P

DEPARTMENT OF COMMERCE

International Trade Administration

[A–570–053, A–570–073, C–570–054, C–570–074]

Certain Aluminum Foil and Common Alloy Aluminum Sheet From the People's Republic of China: Final Results of Antidumping Duty Changed Circumstances Reviews and Rescission of Countervailing Duty Changed Circumstances Reviews

AGENCY: Enforcement and Compliance, International Trade Administration, Department of Commerce.

SUMMARY: The Department of Commerce (Commerce) continues to find that Shanghai Huafon Aluminium Corporation (Shanghai Huafon) is the successor-in-interest to Huafon Nikkei Aluminium Corporation (Huafon Nikkei) for purposes of determining antidumping duty cash deposits and liabilities on certain aluminum foil (aluminum foil) and common alloy aluminum sheet (aluminum sheet) from the People's Republic of China (China). Additionally, Commerce is rescinding the countervailing duty changed circumstance reviews (CCRs) of aluminum foil and aluminum sheet from China based on the lack of necessary information on the record.

DATES: Applicable May 22, 2020.

FOR FURTHER INFORMATION CONTACT: Joshua A. DeMoss, AD/CVD Operations, Office VI, Enforcement and Compliance, International Trade Administration, U.S. Department of Commerce, 1401 Constitution Avenue NW, Washington, DC 20230; telephone: (202) 482–3362.

SUPPLEMENTARY INFORMATION:

Background

On September 17, 2019, Commerce published the *Initiation and Preliminary Results,* finding Shanghai Huafon to be the successor-in-interest to Huafon Nikkei for purposes of the antidumping duty and countervailing duty orders.[1] In the *Initiation* and *Preliminary Results,* interested parties were provided an opportunity to comment and request a public hearing regarding our preliminary results. We received no comments from interested parties nor was a public hearing requested.

On October 7, 2019, Commerce determined it lacked certain information with respect to the final determination in the countervailing duty CCRs and requested additional information from Shanghai Huafon.[2] Shanghai Huafon did not respond to Commerce's request for additional information. Rather, it withdrew its request for the countervailing duty CCRs.[3]

Scope of the Orders

Certain Aluminum Foil

The merchandise covered by these orders is aluminum foil having a thickness of 0.2 mm or less, in reels exceeding 25 pounds, regardless of width. Aluminum foil is made from an aluminum alloy that contains more than 92 percent aluminum. Aluminum foil may be made to ASTM specification ASTM B479, but can also be made to other specifications. Regardless of specification, however, all aluminum foil meeting the scope description is included in the scope, including aluminum foil to which lubricant has been applied to one or both sides of the foil.

Excluded from the scope of this order is aluminum foil that is backed with paper, paperboard, plastics, or similar backing materials on one side or both sides of the aluminum foil, as well as etched capacitor foil and aluminum foil that is cut to shape.

Where the nominal and actual measurements vary, a product is within the scope if application of either the nominal or actual measurement would place it within the scope based on the definitions set forth above. The products under the order are currently classifiable under Harmonized Tariff Schedule of the United States (HTSUS) subheadings 7607.11.3000, 7607.11.6000, 7607.11.9030, 7607.11.9060, 7607.11.9090, and 7607.19.6000. Further, merchandise that falls within the scope of this proceeding may also be entered into the United States under HTSUS subheadings 7606.11.3060, 7606.11.6000, 7606.12.3045, 7606.12.3055, 7606.12.3090, 7606.12.6000, 7606.91.3090, 7606.91.6080, 7606.92.3090, and 7606.92.6080.

Although the HTSUS subheadings are provided for convenience and customs purposes, the written description of the scope of this order is dispositive.

Common Alloy Aluminum Sheet

The merchandise covered by this order is aluminum common alloy sheet (common alloy sheet), which is a flat-rolled aluminum product having a thickness of 6.3 mm or less, but greater than 0.2 mm, in coils or cut-to-length, regardless of width. Common alloy sheet within the scope of this order includes both not clad aluminum sheet, as well as multi-alloy, clad aluminum sheet. With respect to not clad aluminum sheet, common alloy sheet is manufactured from a 1XXX-, 3XXX-, or 5XXX-series alloy as designated by the Aluminum Association. With respect to multi-alloy, clad aluminum sheet, common alloy sheet is produced from a 3XXX-series core, to which cladding layers are applied to either one or both sides of the core.

Common alloy sheet may be made to ASTM specification B209–14, but can also be made to other specifications. Regardless of specification, however, all common alloy sheet meeting the scope

---

[1] *See Certain Aluminum Foil and Common Alloy Aluminum Sheet from the People's Republic of China: Notice of Initiation and Preliminary Determination of Antidumping Duty and Countervailing Duty Changed Circumstances Reviews,* 84 FR 48909 (September 17, 2019) (*Initiation and Preliminary Results*).

[2] *See* Commerce's Letter, ''Antidumping/Countervailing Duty Changed Circumstances Reviews of Aluminum Foil and Sheet from China,'' dated October 7, 2019.

[3] *See* Shanghai Huafon's Letter, ''Aluminum Foil from the People's Republic of China: Withdraw Request for Changed Circumstances Review,'' dated October 11, 2019.

description is included in the scope. Subject merchandise includes common alloy sheet that has been further processed in a third country, including but not limited to annealing, tempering, painting, varnishing, trimming, cutting, punching, and/or slitting, or any other processing that would not otherwise remove the merchandise from the scope of the order if performed in the country of manufacture of the common alloy sheet.

Excluded from the scope of this order is aluminum can stock, which is suitable for use in the manufacture of aluminum beverage cans, lids of such cans, or tabs used to open such cans. Aluminum can stock is produced to gauges that range from 0.200 mm to 0.292 mm, and has an H–19, H–41, H–48, or H–391 temper. In addition, aluminum can stock has a lubricant applied to the flat surfaces of the can stock to facilitate its movement through machines used in the manufacture of beverage cans. Aluminum can stock is properly classified under Harmonized Tariff Schedule of the United States (HTSUS) subheadings 7606.12.3045 and 7606.12.3055.

Where the nominal and actual measurements vary, a product is within the scope if application of either the nominal or actual measurement would place it within the scope based on the definitions set for the above.

Common alloy sheet is currently classifiable under HTSUS subheadings 7606.11.3060, 7606.11.6000, 7606.12.3090, 7606.12.6000, 7606.91.3090, 7606.91.6080, 7606.92.3090, and 7606.92.6080. Further, merchandise that falls within the scope of this order may also be entered into the United States under HTSUS subheadings 7606.11.3030, 7606.12.3030, 7606.91.3060, 7606.91.6040, 7606.92.3060, 7606.92.6040, 7607.11.9090. Although the HTSUS subheadings are provided for convenience and customs purposes, the written description of the scope of this order is dispositive.

The description of carbon-quality is intended to identify carbon-quality products within the scope. The welded carbon-quality rectangular pipe and tube subject to this order is currently classified under the Harmonized Tariff Schedule of the United States (HTSUS) subheadings 7306.61.50.00 and 7306.61.70.60. While HTSUS subheadings are provided for convenience and customs purposes, our written description of the scope of this order is dispositive.

Rescission of Countervailing Duty Changed Circumstances Reviews

As noted above, Commerce does not have all necessary information on the record to make a final determination in the countervailing duty CCRs of aluminum foil and aluminum sheet. For the countervailing duty CCRs, Commerce requires, among other things, a longer and well-defined time span for the ''look-back'' period and additional documents, such as financial statements, pursuant to *Turkey Pasta CCR 2009*.[4] Commerce requires this information to make a successor-in-interest finding for countervailing duty orders because we need to review the operations, ownership, corporate or legal structure during the relevant period that could have affected the nature and extent of the respondent's subsidy levels. As *Turkey Pasta CCR 2009* states, in a countervailing duty CCR, our focus is government subsidization and whether any changes in the company might affect the nature and extent of that subsidization, while in an antidumping CCR we are concerned, instead, with price discrimination, *i.e.,* the pricing behavior of the company.[5] Thus, some of the information we request and need for purposes of our analysis are distinct. In this case, because the respondent did not reply to our request for information in the countervailing duty CCRs, we do not have all the necessary information we need to make a determination with respect to the countervailing duty CCRs. Accordingly, we are rescinding the countervailing duty CCRs of aluminum foil and aluminum sheet from China in their entirety.

Final Results of the Antidumping Duty Changed Circumstances Reviews

For the reasons stated in the *Initiation and Preliminary Results,* and because we received no comments from interested parties, Commerce continues to find that Shanghai Huafon is the successor-in-interest to Huafon Nikkei for antidumping duty purposes. As a result of this determination, we determine that Shanghai Huafon should receive the antidumping cash deposit rates applicable to Huafon Nikkei. Consequently, Commerce will instruct U.S. Customs and Border Protection to suspend liquidation of all shipments of subject merchandise produced or exported by Shanghai Huafon and entered, or withdrawn from warehouse, for consumption on or after the publication date of this notice in the **Federal Register** at 73.66 percent for aluminum foil, which is the current antidumping duty cash-deposit rate of aluminum foil for Huafon Nikkei,[6] and at 49.85 percent for aluminum sheet, which is the current antidumping cash deposit rate of aluminum sheet for Huafon Nikkei.[7] This cash deposit requirement shall remain in effect until further notice.

Notification to Interested Parties

This notice is published in accordance with sections 751(b)(1) and 777(i)(1) of the Act and 19 CFR 351.216(b), 351.221(b) and 351.221(c)(3).

Dated: May 15, 2020.

Jeffrey I. Kessler,

Assistant Secretary for Enforcement and Compliance.

[FR Doc. 2020–11113 Filed 5–21–20; 8:45 am]

BILLING CODE 3510–DS–P

[4] *See Certain Pasta from Turkey: Preliminary Results of Countervailing Duty Changed Circumstances Review,* 74 FR 47225, 47227 (September 15, 2009) (*Turkey Pasta CCR 2009*), unchanged in *Certain Pasta From Turkey: Final Results of Countervailing Duty Changed Circumstances Review,* 74 FR 54022 (October 21, 2009).

[5] *See Turkey Pasta CCR 2009,* 74 FR at 47227.

[6] *See Certain Aluminum Foil From the People's Republic of China: Amended Final Determination of Sales at Less Than Fair Value and Antidumping Duty Order,* 83 FR 17362 (April 19, 2018); *see also Certain Aluminum Foil From the People's Republic of China: Amended Final Affirmative Countervailing Duty Determination and Countervailing Duty Order,* 83 FR 17360 (April 19, 2018) (collectively, Aluminum Foil Orders).

[7] *See Common Alloy Aluminum Sheet From the People's Republic of China: Antidumping Duty Order,* 84 FR 2813 (February 8, 2019); *see also Common Alloy Aluminum Sheet From the People's Republic of China: Countervailing Duty Order,* 84 FR 2157 (February 6, 2019) (collectively, Aluminum Sheet Orders).

DEPARTMENT OF COMMERCE

National Oceanic and Atmospheric Administration

[RTID 0648–XA193]

Pacific Fishery Management Council; Public Meeting

AGENCY: National Marine Fisheries Service (NMFS), National Oceanic and Atmospheric Administration (NOAA), Commerce.

ACTION: Notice of public meeting.

SUMMARY: The Pacific Fishery Management Council's (Pacific Council) Southern Oregon/Northern California Coast (SONCC) Coho Technical Team (Team) will hold an online meeting, which is open to the public.

DATES: The online meeting will be held on Tuesday, June 9, 2020, from 9 a.m. until 4:30 p.m., Pacific Daylight Time, or until business is complete.

ADDRESSES: This meeting will be held online. Specific meeting information, including directions on how to join the meeting and system requirements will be provided in the meeting announcement on the Pacific Council's website (see *www.pcouncil.org*). You may send an email to Mr. Kris Kleinschmidt (*kris.kleinschmidt@noaa.gov*) or contact him at (503) 820–2280, extension 412 for technical assistance.

Council address: Pacific Fishery Management Council, 7700 NE Ambassador Place, Suite 101, Portland, OR 97220–1384.

FOR FURTHER INFORMATION CONTACT: Robin Ehlke, Staff Officer, Pacific Council; telephone: (503) 820–2410.

SUPPLEMENTARY INFORMATION: The SONCC Team will discuss a timeline and workplan to develop a harvest control rule for SONCC coho that NMFS could consider in establishing a new Endangered Species Act consultation standard for SONCC coho. A draft Terms of Reference and timeline will also be discussed, which the Team will work to finalize. The Team may also discuss the upcoming Pacific Council meeting scheduled in June, and draft a statement and prepare materials for that meeting. Public comments during the meeting will be received from attendees at the discretion of the Team Chair.

Although non-emergency issues not contained in the meeting agenda may be discussed, those issues may not be the subject of formal action during this meeting. Action will be restricted to those issues specifically listed in this document and any issues arising after publication of this document that require emergency action under section 305(c) of the Magnuson-Stevens Fishery Conservation and Management Act, provided the public has been notified of the intent to take final action to address the emergency.

Special Accommodations

Requests for sign language interpretation or other auxiliary aids should be directed to Mr. Kris Kleinschmidt (*kris.kleinschmidt@noaa.gov;* (503) 820–2412) at least 10 days prior to the meeting date.

Authority: 16 U.S.C. 1801 *et seq.*

Dated: May 19, 2020.

Tracey L. Thompson,

Acting Deputy Director, Office of Sustainable Fisheries, National Marine Fisheries Service.

[FR Doc. 2020–11086 Filed 5–21–20; 8:45 am]

BILLING CODE 3510–22–P

DEPARTMENT OF COMMERCE

National Oceanic and Atmospheric Administration

[RTID 0648–XA128]

Takes of Marine Mammals Incidental to Specified Activities; Taking Marine Mammals Incidental to Ward Cove Cruise Ship Dock Project, Juneau, Alaska

AGENCY: National Marine Fisheries Service (NMFS), National Oceanic and Atmospheric Administration (NOAA), Commerce.

ACTION: Notice; issuance of an incidental harassment authorization.

SUMMARY: In accordance with the regulations implementing the Marine Mammal Protection Act (MMPA) as amended, notification is hereby given that NMFS has issued an incidental harassment authorization (IHA) to Power Systems & Supplies of Alaska (PSSA) to incidentally harass, by Level A and B harassment only, marine mammals during construction activities associated with the Ward Cove Cruise Ship Dock Project near Ketchikan, Alaska.

DATES: This authorization is effective for one year from the date of issuance.

FOR FURTHER INFORMATION CONTACT: Dwayne Meadows, Ph.D., Office of Protected Resources, NMFS, (301) 427–8401. Electronic copies of the application and supporting documents, as well as a list of the references cited in this document, may be obtained online at: *https://www.fisheries.noaa.gov/permit/incidental-take-authorizations-under-marine-mammal-protection-act.* In case of problems accessing these documents, please call the contact listed above.

SUPPLEMENTARY INFORMATION:

Background

The MMPA prohibits the ''take'' of marine mammals, with certain exceptions. Sections 101(a)(5)(A) and (D) of the MMPA (16 U.S.C. 1361 *et seq.*) direct the Secretary of Commerce (as delegated to NMFS) to allow, upon request, the incidental, but not intentional, taking of small numbers of marine mammals by U.S. citizens who engage in a specified activity (other than commercial fishing) within a specified geographical region if certain findings are made and either regulations are issued or, if the taking is limited to harassment, a notice of a proposed incidental take authorization may be provided to the public for review.

Authorization for incidental takings shall be granted if NMFS finds that the taking will have a negligible impact on the species or stock(s) and will not have an unmitigable adverse impact on the availability of the species or stock(s) for taking for subsistence uses (where relevant). Further, NMFS must prescribe the permissible methods of taking and other ''means of effecting the least practicable adverse impact'' on the affected species or stocks and their habitat, paying particular attention to rookeries, mating grounds, and areas of similar significance, and on the availability of the species or stocks for taking for certain subsistence uses (referred to in shorthand as ''mitigation''); and requirements pertaining to the mitigation, monitoring and reporting of the takings are set forth.

The definitions of all applicable MMPA statutory terms cited above are included in the relevant sections below.

Summary of Request

On December 30, 2019, NMFS received a request from PSSA for an IHA to take marine mammals incidental to Ward Cove Cruise Ship Dock Project near Ketchikan, Alaska. The application was deemed adequate and complete on February 5, 2020. PSSA's request is for take of four species by Level B harassment and/or Level A harassment. Neither PSSA nor NMFS expects serious injury or mortality to result from this activity and, therefore, an IHA is appropriate.

Description of the Specified Activity

Overview

The project consists of the construction of a cruise ship dock for two cruise ships in Ward Cove, approximately 8 kilometers (5 miles) north of downtown Ketchikan, Alaska. PSSA would install a pile supported 500-foot by 70-foot (152 by 21 m) floating pontoon dock, mooring structures, and shore-access transfer span and trestle. The project includes the following in-water components: Driving 102, 30–48 inch diameter steel pipe piles to support the structures and removal of 48 of these piles (all 30-inch diameter) that are being used solely as templates to guide installation of larger permanent piles. It is expected to take no more than 105 days of in-water work. Pile driving would be by vibratory pile driving until resistance is too great and driving would switch to an impact hammer. Removal of temporary piles would use vibratory methods only. Forty larger 36- and 48-inch piles would also be rock anchored into place using a down-the-hole (DTH) hammer.

A detailed description of the planned project is provided in the **Federal**

Register notice for the proposed IHA (85 FR 12523; March 3, 2020). Since that time, no changes have been made to the planned activities. Therefore, a detailed description is not provided here. Please refer to that **Federal Register** notice for the full description of the specific activity.

Mitigation, monitoring, and reporting measures are described in detail later in this document (please see Mitigation and Monitoring and Reporting).

Comments and Responses

A notice of NMFS's proposal to issue an IHA to PSSA was published in the **Federal Register** on March 3, 2020 (85 FR 12523). That notice described, in detail, PSSA's activity, the marine mammal species that may be affected by the activity, and the anticipated effects on marine mammals. During the 30-day public comment period, NMFS received public comment from two individuals generally opposed to cruise ships, but with no comments specific to the authorization. The U.S. Geological Survey noted they have ''no comment to offer at this time''. Defenders of Wildlife (Defenders) provided comments we address below. A comment letter from the Marine Mammal Commission (Commission) was received pursuant to the Commission's authority to recommend steps it deems necessary or desirable to protect and conserve marine mammals (16 U.S.C. 1402.202(a)). We are obligated to respond to the Commission's recommendations within 120 days, and we do so below.

Comment: Defenders requested we extend the comment period.

Response: In their comment letter Defenders provided specific comments on the action. They did not note knowledge of any other members of the public that would be providing public comments. We received a larger than normal number of public comments on this action. The project is already underway (with additional mitigation measures that are intended to avoid marine mammal take). Thus there is no evidence than any member of the public would be disadvantaged by not being able to comment on this action and the current work does not benefit from MMPA coverage until an authorization is issued; therefore we decline to extend the comment period.

Comment: Defenders notes that the Army Corps of Engineers permit and the ESA Section 7 Letter of Concurrence (LOC) provide different dates for when activities will need to cease to protect ESA listed species and that the IHA is unclear about these limits.

Response: The ESA LOC does state that in-water work will be completed by May of each year and the Army Corps permit does state that PSSA will follow the LOC, despite the conflicting language elsewhere. Should in-water work extend beyond May, the LOC would no longer be applicable, but that is not a requirement of this MMPA authorization. However, in fact the LOC has been extended through September 30, 2020.

Comment: Defenders noted that Mexico DPS humpback whales may increase in frequency as summer progresses. They suggested that we should require in-water work to be completed by the end of May.

Response: PSSA chose not to request take of humpback whales and to instead shutdown work should whales enter the shutdown zone in Tongass Narrows (they are not likely to enter Ward Cove). Based on the first two months of project reports submitted to NMFS Alaska Region Office in response to the LOC, PSSA has observed two pods of humpback whales and were successfully able to observe them and shut down the project without take occurring. This justifies our initial determination that the Protected Species Observers (PSOs) will see humpback before they cross through the relatively discrete area of Tongass Narrows that might be ensonified above the threshold. As noted above, the LOC has been extended through September 30, 2020.

Comment: The Commission recommends that NMFS refrain from issuing renewals for any authorization and instead use its abbreviated **Federal Register** notice process. They further recommend that if NMFS uses renewals, we (1) stipulate in all **Federal Register** notices and authorizations that a renewal is a one-time opportunity and, (2) if NMFS refuses to stipulate a renewal being a one-time opportunity, explain why it will not do so.

Response: NMFS does not agree with the Commission and, therefore, does not adopt the Commission's recommendation. NMFS will provide a detailed explanation of its decision within 120 days, as required by section 202(d) of the MMPA.

Comment: The Commission recommended that NMFS continue to include in all draft and final IHAs the explicit requirements to cease activities if a marine mammal is injured or killed during the proposed activities until NMFS reviews the circumstances involving any injury or death that has been attributed to the activities and determines what additional measures are necessary to minimize additional injuries or deaths.

Response: NMFS concurs with the Commission's recommendation as it relates to this IHA, and construction IHAs in general, and has added the referenced language to the Monitoring and Reporting section of this notice and the Reporting section of the issued IHA. We will continue to evaluate inclusion of this language in future IHAs.

Comment: The Commission again recommends that NMFS (1) have its experts in underwater acoustics and bioacoustics review and finalize its recommended proxy source levels for both impact and vibratory installation of the various pile types and sizes and (2) make available to action proponents the database of proxy source levels.

Response: NMFS appreciates the Commission's interest in this issue and, as we have indicated previously, we are working on developing such a product.

Comment: The Commission made a number of comments with regard to DTH hammering. The Commission recommends NMFS consider DTH hammering as impulsive. They further recommend that NMFS (1) require action proponents to provide the necessary operational information and characteristics for DTH hammering in each relevant application irrespective of what terminology is used, (2) encourage action proponents to use consistent terminology regarding DTH hammering in all relevant applications, and (3) use consistent terminology in all future **Federal Register** notices and draft and final authorizations that involve DTH hammering. Finally, the Commission recommends that NMFS re-estimate the Level A harassment zones for DTH hammering based on source levels provided either by Reyff and Heyvaert (2019) or Denes *et al.* (2019) and increase the numbers of Level A harassment takes accordingly.

Response: We agree with the Commission that as knowledge of the variety of DTH methods and uses grows, more information from applicants on operational information and characteristics of DTH, and more consistent terminology, is beneficial.

NMFS acknowledges that DTH piling operations can include both impulsive and continuous noise components. The limited available data show that the specific acoustic characteristics of any particular DTH piling operation can vary significantly, based on the extent of the continuous non-pulse acoustic components of the drilling/pumping and the impulsive acoustic components of the hammering, as well as the nature of the environment (especially bottom characteristics). Currently, given the potential variation in the acoustic output from any specific operation and

the limited in situ measurements of DTH hammering available, NMFS is taking a conservative approach until more data are available. Specifically, we recommend estimating the potential impulsive components (and using the associated thresholds) of the operations for the purposes of predicting Level A harassment and estimating the potential continuous components (and using the associated threshold) for the purposes of predicting Level B harassment. Further, given the strengths, weaknesses, and characteristics of the available data, until additional measurements and analyses are available for consideration, we recommend using the Denes *et al.* (2019) source levels as a proxy source level for the purposes of the Level A harassment assessment and the Denes *et al.* (2016) for the purposes of the Level B harassment assessment.

We note that Denes *et al.* (2019) used a 42-inch drill bit to drill much larger holes than the 33-inch drill bit and holes of this project. The larger drill bits drill an area 38.2 percent larger, likely creating louder sounds from the larger area of contact with rock, which means that the Level A harassment zones may be overestimated to some degree for this project. As a result of the increased size of the Level A harassment zones we have added harbor and Dall's porpoises to the 200 m shutdown zone requirement and added 15 Level A harassment takes for each species.

We note also that the Commission erroneously claimed PSSA was using a top head drive system, but the application clearly notes the system is a DTH system.

Comment: The Commission recommends that NMFS require all applicants that propose to use a DTH hammer to install piles, including PSSA, to conduct in-situ measurements, ensure that signal processing is conducted appropriately, and adjust the Level A and B harassment zones accordingly.

Response: As required by their ESA Section 7 concurrence letter, PSSA is conducting in-situ sound monitoring of multiple piles. We will evaluate the need to require such measures for future projects on a case-by-case basis, though we acknowledge the general need for more data on these sources.

Changes From the Proposed IHA to Final IHA

The sound source levels used to calculate impact pile driving harassment ones were measured at 11 m from the source and we failed to correct them to the standard 10 m source level distance criterion used in calculations. As a result harassment zone sizes increased slightly (see Estimated Take section below for full details). As a result of these changes, and observations of Steller's sea lions in the project area since the project started, we are adding take of Steller's sea lions to the authorization at the request of the applicant (see Estimated Take section below for full details).

As discussed above in the Comments and Responses section, we are changing the approach to DTH hammering so that we estimate the potential impulsive components (using the associated thresholds) of the operations for the purposes of predicting Level A harassment and estimate the potential continuous components (using the associated threshold) for the purposes of predicting Level B harassment. We use the Denes *et al.* (2019) source levels as a proxy source level for the purposes of the Level A harassment assessment. As a result of the increased size of the Level A harassment zones we have added harbor and Dall's porpoises to the 200 m shutdown zone requirement and added 15 Level A harassment takes for each species. We add the explicit requirements to cease activities if a marine mammal is injured or killed during the proposed activities until NMFS reviews the circumstances to the Monitoring and Reporting section of this notice and the Reporting section of the issued IHA. Minor typographical errors were also corrected.

Description of Marine Mammals in the Area of Specified Activities

Sections 3 and 4 of the application summarize available information regarding status and trends, distribution and habitat preferences, and behavior and life history, of the potentially affected species. Additional information regarding population trends and threats may be found in NMFS's Stock Assessment Reports (SARs; *https://www.fisheries.noaa.gov/national/marine-mammal-protection/marine-mammal-stock-assessments*) and more general information about these species (*e.g.,* physical and behavioral descriptions) may be found on NMFS's website (*https://www.fisheries.noaa.gov/find-species*).

Table 1 lists all species with expected potential for occurrence in the project area near Ketchikan, Alaska and summarizes information related to the population or stock, including regulatory status under the MMPA and ESA and potential biological removal (PBR), where known. For taxonomy, we follow Committee on Taxonomy (2019). PBR is defined by the MMPA as the maximum number of animals, not including natural mortalities, that may be removed from a marine mammal stock while allowing that stock to reach or maintain its optimum sustainable population (as described in NMFS's SARs). While no mortality is anticipated or authorized here, PBR and annual serious injury and mortality from anthropogenic sources are included here as gross indicators of the status of the species and other threats.

Marine mammal abundance estimates presented in this document represent the total number of individuals that make up a given stock or the total number estimated within a particular study or survey area. NMFS's stock abundance estimates for most species represent the total estimate of individuals within the geographic area, if known, that comprises that stock. For some species, this geographic area may extend beyond U.S. waters. All managed stocks in this region are assessed in NMFS's U.S. Alaska SARs (*e.g.,* Muto *et al.* 2019). All values presented in Table 1 are the most recent available at the time of publication and are available in the 2019 draft SARs (Muto *et al.,* 2019).

TABLE 1—MARINE MAMMALS THAT COULD OCCUR IN THE PROPOSED PROJECT AREA

Common name	Scientific name	MMPA stock	ESA/MMPA status; strategic (Y/N) [1]	Stock abundance Nbest, (CV, N_{min}, most recent abundance survey) [2]	PBR	Annual M/SI [3]
Order Cetartiodactyla—Cetacea—Superfamily Mysticeti (baleen whales)						
Family Eschrichtiidae:						
Gray Whale	*Eschrichtius robustus*	Eastern North Pacific	-, -, N	26,960 (0.05, 25,849, 2016).	801	138
Family Balaenidae:						
Humpback whale	*Megaptera novaeangliae*	Central North Pacific	E, D,Y	10,103 (0.3; 7,891; 2006)	83	25

TABLE 1—MARINE MAMMALS THAT COULD OCCUR IN THE PROPOSED PROJECT AREA—Continued

Common name	Scientific name	MMPA stock	ESA/ MMPA status; strategic (Y/N) [1]	Stock abundance Nbest, (CV, N_{min}, most recent abundance survey) [2]	PBR	Annual M/SI [3]
Minke whale	*Balaenoptera acutorostrata*	Alaska	-, N	N.A	N.A.	N.A.
Fin whale	*Balaenoptera physalus*	Northeast Pacific	E, D, Y	N.A	5.1	0.4
Order Cetartiodactyla—Cetacea—Superfamily Odontoceti (toothed whales, dolphins, and porpoises)						
Family Delphinidae:						
Killer whale	*Orcinus orca*	Alaska Resident	-, N	2,347 (N.A.; 2,347; 2012)	24	1
		West Coast Transient	-, N	243 (N.A, 243, 2009)	2.4	0
		Northern Resident	-, N	302 (N.A.; 302, 2018)	2.2	0.2
Pacific white-sided dolphin	*Lagenorhynchus obliquidens*	North Pacific	-,-; N	26,880 (N.A.; N.A.; 1990)	N.A.	0
Family Phocoenidae:						
Harbor porpoise	*Phocoena phocoena*	Southeast Alaska	-, Y	975 (0.10; 896; 2012)	8.95	34
Dall's porpoise	*Phocoenoides dalli*	Alaska	-, N	N.A	N.A.	38
Order Carnivora—Superfamily Pinnipedia						
Family Otariidae (eared seals and sea lions):						
Steller sea lion	*Eumetopias jubatus*	Eastern U.S.	-,-, N	43,201 (N.A.; 43,201; 2017).	2,592	113
Family Phocidae (earless seals):						
Harbor seal	*Phoca vitulina richardii*	Clarence Strait	-, N	27,659 (N.A.; 24,854; 2015).	746	40

[1] Endangered Species Act (ESA) status: Endangered (E), Threatened (T)/MMPA status: Depleted (D). A dash (-) indicates that the species is not listed under the ESA or designated as depleted under the MMPA. Under the MMPA, a strategic stock is one for which the level of direct human-caused mortality exceeds PBR or which is determined to be declining and likely to be listed under the ESA within the foreseeable future. Any species or stock listed under the ESA is automatically designated under the MMPA as depleted and as a strategic stock.

[2] NMFS marine mammal stock assessment reports online at: *https://www.fisheries.noaa.gov/national/marine-mammal-protection/marine-mammal-stock-assessments.* CV is coefficient of variation; N_{min} is the minimum estimate of stock abundance. In some cases, CV is not applicable (N.A.).

[3] These values, found in NMFS's SARs, represent annual levels of human-caused mortality plus serious injury from all sources combined (*e.g.,* commercial fisheries, ship strike). Annual M/SI often cannot be determined precisely and is in some cases presented as a minimum value or range. A CV associated with estimated mortality due to commercial fisheries is presented in some cases.

A detailed description of the of the species likely to be affected by this project, including brief introductions to the species and relevant stocks as well as available information regarding population trends and threats, and information regarding local occurrence, were provided in the **Federal Register** notice for the proposed IHA (85 FR 12523; March 3, 2020); since that time, we are not aware of any changes in the status of these species and stocks; therefore, detailed descriptions are not provided here. Please refer to that **Federal Register** notice for these descriptions. As noted above however, we are adding take of Steller's sea lions to the authorization at the request of the applicant so a description of this species follows.

Steller's Sea Lion

Steller sea lions (*Eumetopias jubatus*) were listed as threatened range-wide under the ESA on November 26, 1990 (55 FR 49204). Steller sea lions were subsequently partitioned into the western and eastern Distinct Population Segments (DPSs; western and eastern stocks) in 1997 (62 FR 24345, May 5, 1997). The eastern DPS was delisted in 2013. The eastern DPS is the only population of Steller's sea lions thought to occur in the project area. The current minimum abundance estimate for the eastern DPS of Steller sea lions is 43,201 individuals (Muto *et al.* 2019).

The nearest known Steller sea lion haulout is located approximately 17 miles (27 km) west/northwest of Ketchikan on Grindall Island. Summer counts of adult and juvenile sea lions at this haulout since 2000 have averaged approximately 191 individuals, with a range from 6 in 2009 to 378 in 2008. No sea lion pups have been observed at this haulout.

No systematic studies of sea lion abundance or distribution have occurred in Tongass Narrows. Anecdotal reports suggest that Steller sea lions may be found in Tongass Narrows year-round, with an increase in abundance from March to early May during the herring spawning season, and another increase in late summer associated with salmon runs. Overall sea lion presence in Tongass Narrows tends to be lower in summer than in winter (FHWA 2017). During summer, Steller sea lions may aggregate outside the project area, at rookery and haulout sites. Monitoring during construction of the Ketchikan Ferry Terminal in summer (July 16 through August 17, 2016) did not record any Steller sea lions.

Sea lions are known to transit through Tongass Narrows while pursuing prey. Steller sea lions are known to follow fishing vessels, and may congregate in small numbers at seafood processing facilities and hatcheries or at the mouths of rivers and creeks containing hatcheries, where large numbers of salmon congregate in late summer. Three seafood processing facilities are located east of the proposed project location on Revilla Island, and two salmon hatcheries operated by the Alaska Department of Fish & Game (ADF&G) are located east of the project area. Steller sea lions may aggregate near the mouth of Ketchikan Creek, where a hatchery upstream supports a summer salmon run. The Creek mouth is more than 9 kilometers (5.5 miles) east of the entrance to Ward Cove.

Potential Effects of Specified Activities on Marine Mammals and Their Habitat

The effects of underwater noise from PSSA's construction activities have the potential to result in behavioral harassment of marine mammals in the vicinity of the survey area. The notice of proposed IHA (85 FR 12523; March 3, 2020) included a discussion of the effects of anthropogenic noise on marine mammals and the potential effects of underwater noise from PSSA's survey activities on marine mammals and their habitat. That information and analysis is incorporated by reference into this final IHA determination and is not repeated

here; please refer to the notice of proposed IHA (85 FR 12523; March 3, 2020).

Estimated Take

This section provides an estimate of the number of incidental takes authorized through this IHA, which will inform both NMFS' consideration of ''small numbers'' and the negligible impact determination.

Harassment is the only type of take expected to result from these activities. Except with respect to certain activities not pertinent here, section 3(18) of the MMPA defines ''harassment'' as any act of pursuit, torment, or annoyance, which (i) has the potential to injure a marine mammal or marine mammal stock in the wild (Level A harassment); or (ii) has the potential to disturb a marine mammal or marine mammal stock in the wild by causing disruption of behavioral patterns, including, but not limited to, migration, breathing, nursing, breeding, feeding, or sheltering (Level B harassment).

Authorized takes would primarily be by Level B harassment, as use of the acoustic source (*i.e.,* vibratory or impact pile driving or DTH) has the potential to result in disruption of behavioral patterns for individual marine mammals. There is also some potential for auditory injury (Level A harassment) to result for pinnipeds because predicted auditory injury zones are larger and harbor seals are the only animals routinely seen in Ward Cove. The mitigation and monitoring measures are expected to minimize the severity of the taking to the extent practicable.

As described previously, no mortality is anticipated or authorized for this activity. Below we describe how the take is estimated.

Generally speaking, we estimate take by considering: (1) Acoustic thresholds above which NMFS believes the best available science indicates marine mammals will be behaviorally harassed or incur some degree of permanent hearing impairment; (2) the area or volume of water that will be ensonified above these levels in a day; (3) the density or occurrence of marine mammals within these ensonified areas; and, (4) and the number of days of activities. We note that while these basic factors can contribute to a basic calculation to provide an initial prediction of takes, additional information that can qualitatively inform take estimates is also sometimes available (*e.g.,* previous monitoring results or average group size). Due to the lack of marine mammal density, NMFS relied on local occurrence data and group size to estimate take. Below, we describe the factors considered here in more detail and present the take estimate.

Acoustic Thresholds

Using the best available science, NMFS has developed acoustic thresholds that identify the received level of underwater sound above which exposed marine mammals would be reasonably expected to be behaviorally harassed (equated to Level B harassment) or to incur Permanent Threshold Shift (PTS) of some degree (equated to Level A harassment).

Level B Harassment for non-explosive sources—Though significantly driven by received level, the onset of behavioral disturbance from anthropogenic noise exposure is also informed to varying degrees by other factors related to the source (*e.g.,* frequency, predictability, duty cycle), the environment (*e.g.,* bathymetry), and the receiving animals (*e.g.,* hearing, motivation, experience, demography, behavioral context) and can be difficult to predict (Southall *et al.,* 2007, Ellison *et al.,* 2012). Based on what the available science indicates and the practical need to use a threshold based on a factor that is both predictable and measurable for most activities, NMFS uses a generalized acoustic threshold based on received level to estimate the onset of behavioral harassment. NMFS predicts that marine mammals are likely to be behaviorally harassed in a manner we consider Level B harassment when exposed to underwater anthropogenic noise above received levels of 120 dB re 1 microPascal (μPa) (root mean square (rms)) for continuous (*e.g.,* vibratory pile-driving, drilling) and above 160 dB re 1 μPa (rms) for non-explosive impulsive (*e.g.,* impact pile driving) or intermittent (*e.g.,* scientific sonar) sources.

PSSA's proposed activity includes the use of continuous (vibratory pile-driving, DTH) and impulsive (impact pile-driving) sources, and therefore the 120 and 160 dB re 1 μPa (rms) thresholds are applicable.

Level A harassment for non-explosive sources—NMFS' Technical Guidance for Assessing the Effects of Anthropogenic Sound on Marine Mammal Hearing (Version 2.0) (Technical Guidance, 2018) identifies dual criteria to assess auditory injury (Level A harassment) to five different marine mammal groups (based on hearing sensitivity) as a result of exposure to noise from two different types of sources (impulsive or non-impulsive). PSSA's activity includes the use of impulsive (impact pile-driving, as well as DTH hammering, which includes impulsive components) and non-impulsive (vibratory pile driving/removal and drilling) sources.

These thresholds are provided in Table 2. The references, analysis, and methodology used in the development of the thresholds are described in NMFS 2018 Technical Guidance, which may be accessed at *https://www.fisheries.noaa.gov/national/marine-mammal-protection/marine-mammal-acoustic-technical-guidance.*

TABLE 2—THRESHOLDS IDENTIFYING THE ONSET OF PERMANENT THRESHOLD SHIFT

Hearing group	PTS onset acoustic thresholds * (received level)	
	Impulsive	Non-impulsive
Low-Frequency (LF) Cetaceans	*Cell 1:* $L_{pk,flat}$: 219 dB; $L_{E,LF,24h}$: 183 dB	*Cell 2:* $L_{E,LF,24h}$: 199 dB.
Mid-Frequency (MF) Cetaceans	*Cell 3:* $L_{pk,flat}$: 230 dB; $L_{E,MF,24h}$: 185 dB	*Cell 4:* $L_{E,MF,24h}$: 198 dB.
High-Frequency (HF) Cetaceans	*Cell 5:* $L_{pk,flat}$: 202 dB; $L_{E,HF,24h}$: 155 dB	*Cell 6:* $L_{E,HF,24h}$: 173 dB.
Phocid Pinnipeds (PW) (Underwater)	*Cell 7:* $L_{pk,flat}$: 218 dB; $L_{E,PW,24h}$: 185 dB	*Cell 8:* $L_{E,PW,24h}$: 201 dB.
Otariid Pinnipeds (OW) (Underwater)	*Cell 9:* $L_{pk,flat}$: 232 dB; $L_{E,OW,24h}$: 203 dB	*Cell 10:* $L_{E,OW,24h}$: 219 dB.

* Dual metric acoustic thresholds for impulsive sounds: Use whichever results in the largest isopleth for calculating PTS onset. If a non-impulsive sound has the potential of exceeding the peak sound pressure level thresholds associated with impulsive sounds, these thresholds should also be considered.

Note: Peak sound pressure (L_{pk}) has a reference value of 1 μPa, and cumulative sound exposure level (L_E) has a reference value of 1μPa^{2}s. In this Table, thresholds are abbreviated to reflect American National Standards Institute standards (ANSI 2013). However, peak sound pressure is defined by ANSI as incorporating frequency weighting, which is not the intent for this Technical Guidance. Hence, the subscript "flat" is being included to indicate peak sound pressure should be flat weighted or unweighted within the generalized hearing range. The subscript associated with cumulative sound exposure level thresholds indicates the designated marine mammal auditory weighting function (LF, MF, and HF cetaceans, and PW and OW pinnipeds) and that the recommended accumulation period is 24 hours. The cumulative sound exposure level thresholds could be exceeded in a multitude of ways (*i.e.,* varying exposure levels and durations, duty cycle). When possible, it is valuable for action proponents to indicate the conditions under which these acoustic thresholds will be exceeded.

Ensonified Area

Here, we describe operational and environmental parameters of the activity that will feed into identifying the area ensonified above the acoustic thresholds, which include source levels and transmission loss coefficient.

The sound field in the project area is the existing background noise plus additional construction noise from the proposed project. Marine mammals are expected to be affected via sound generated by the primary components of the project (*i.e.,* impact pile driving, vibratory pile driving, vibratory pile removal, and DTH).

Vibratory hammers produce constant sound when operating, and produce vibrations that liquefy the sediment surrounding the pile, allowing it to penetrate to the required seating depth. An impact hammer would then generally be used to place the pile at its intended depth through rock or harder substrates. The actual durations of each installation method vary depending on the type and size of the pile. An impact hammer is a steel device that works like a piston, producing a series of independent strikes to drive the pile. Impact hammering typically generates the loudest noise associated with pile installation.

In order to calculate distances to the Level A harassment and Level B harassment sound thresholds for piles of various sizes being used in this project, NMFS used acoustic monitoring data from other locations to develop source levels (see Table 3). Note that piles of differing sizes have different sound source levels (SSLs).

Empirical data from recent Alaska Department of Transportation (ADOT&PF) sound source verification (SSV) studies at Ketchikan were used to estimate sound source levels for vibratory driving of 30-inch steel pipe piles. Data from Ketchikan was used because of its proximity to this project in Tongass. Data from Anchorage were used for vibratory driving of 36 and 48-inch piles and for impact driving of 30, 36, and 48-inch piles (Austin *et al.* 2016). Source levels from 48-inch piles were used as a proxy for the 30 and 36-inch piles for impact pile driving and for the 36-inch piles for vibratory driving, making those estimated source levels conservative.

For DTH for rock anchoring, source level data from a project in Kodiak were used for the continuous characteristics of DTH (Denes *et al.* 2016) and data from Denes *et al.* (2019) were used for the impulsive characteristics. The reported median source value for DTH from Denes *et al.* (2016) was 166.2 dB rms for all pile types (see Table 72).

TABLE 3—ESTIMATES OF UNDERWATER SOUND LEVELS GENERATED DURING VIBRATORY AND IMPACT PILE INSTALLATION, DRILLING, AND VIBRATORY PILE REMOVAL

Method and pile type	Sound source level at 10 meters			Literature source
Vibratory Hammer	dB rms.			
30-inch steel piles	161.9.			Denes *et al.* 2016, Table 72.
36-inch steel piles	168.2.			Austin *et al.* 2016, Table 16.
48-inch steel piles	168.2.			Austin *et al.* 2016, Table 16.
DTH Rock Anchors (Continuous)	dB rms.			
All pile diameters	166.2.			Denes *et al.* 2016, Table 72.
DTH Rock Anchors (Impulsive)	dB peak	db RMS	dB SS SEL.	
All pile diameters	190	180	164	Denes *et al.* 2019.
Impact Hammer	dB peak		dB SS SEL.	
All pile diameters	212.5		186.7	Austin *et al.* 2016, Tables 7, 9.

Note: It is assumed that noise levels during pile installation and removal are similar. Use of an impact hammer will be limited to 5–10 minutes per pile, if necessary. It is assumed that drilling produces the same SSL for both pile diameters. SS SEL = single strike sound exposure level; dB peak = peak sound level; rms = root mean square.

Level B Harassment Zones

Transmission loss (TL) is the decrease in acoustic intensity as an acoustic pressure wave propagates out from a source. TL parameters vary with frequency, temperature, sea conditions, current, source and receiver depth, water depth, water chemistry, and bottom composition and topography. The general formula for underwater TL is:

where:

TL = B * Log10 (R1/R2),

TL = transmission loss in dB

B = transmission loss coefficient; for practical spreading equals 15

R1 = the distance of the modeled sound pressure level (SPL) from the driven pile, and

R2 = the distance from the driven pile of the initial measurement

The recommended TL coefficient for most nearshore environments is the, practical spreading value of 15. This value results in an expected propagation environment that would lie between spherical and cylindrical spreading loss conditions, which is the most appropriate assumption for PSSA's proposed activity.

Using the practical spreading model, PSSA determined underwater noise would fall below the behavioral effects threshold of 120 dB rms for marine mammals at a maximum radial distance of 16,343 m for vibratory pile driving the 36 and 48-inch diameter piles. This distance determines the maximum Level B harassment zone for the project. Other activities, including rock anchoring (DTH) and impact pile driving, have smaller Level B harassment zones. All Level B harassment isopleths are reported in Table 4 below and visualized in Figure 6 and Table 5 in the IHA application. It should be noted that based on the geography of Ward Cove, Tongass Narrows and the surrounding

islands, sound will not reach the full distance of the Level B harassment isopleth. Generally, due to interaction with land, only a thin slice of the possible area is ensonified and the maximum distance before reaching land barriers is 3,645 m.

TABLE 4—CALCULATED DISTANCES TO LEVEL B HARASSMENT ISOPLETHS DURING PILE INSTALLATION AND REMOVAL

Pile size	Level B isopleth (m)
Vibratory Pile Driving/Removal:	
30-inch piles	6,213
36-inch piles	16,343
48-inch piles	16,343
Impact Pile Driving:	
30-inch piles	3,744
36-inch piles	3,744
48-inch piles	3,744
Rock Anchoring (DTH):	
36-inch piles	12,023
48-inch piles	12,023

Level A Harassment Zones

When the NMFS Technical Guidance (2016) was published, in recognition of the fact that ensonified area/volume could be more technically challenging to predict because of the duration component in the new thresholds, we developed a User Spreadsheet that includes tools to help predict a simple isopleth that can be used in conjunction with marine mammal density or occurrence to help predict takes. We note that because of some of the assumptions included in the methods used for these tools, we anticipate that isopleths produced are typically going to be overestimates of some degree, which may result in some degree of overestimate of take by Level A harassment. However, these tools offer the best way to predict appropriate isopleths when more sophisticated 3D modeling methods are not available, and NMFS continues to develop ways to quantitatively refine these tools, and will qualitatively address the output where appropriate. For stationary sources such as impact/vibratory pile driving or drilling, NMFS User Spreadsheet predicts the closest distance at which, if a marine mammal remained at that distance the whole duration of the activity, it would not incur PTS.

Inputs used in the User Spreadsheet (Table 5), and the resulting isopleths are reported below (Table 6). Level A harassment thresholds for impulsive sound sources (impact pile driving) are defined for both SELcum (cumulative sound exposure levels) and Peak SPL, with the threshold that results in the largest modeled isopleth for each marine mammal hearing group used to establish the Level A harassment isopleth. In this project, Level A harassment isopleths based on SELcum were always larger than those based on Peak SPL.

TABLE 5—PARAMETERS OF PILE DRIVING AND DRILLING ACTIVITY USED IN USER SPREADSHEET

Equipment type	Vibratory pile driver (installation/removal of 30-inch steel piles)	Vibratory pile driver (installation of 36 and 48-inch steel piles)	Impact pile driver (30-inch steel piles)	Impact pile driver (36 and 48-inch steel piles)	Rock anchor (DTH) (36-inch steel piles)	Rock anchor (DTH) (36-inch steel piles)	Rock anchor (DTH) (48-inch steel piles)	Rock anchor (DTH) (48-inch steel piles)
Spreadsheet Tab Used.	Non-impulsive, continuous.	Non-impulsive, continuous.	Impulsive, Non-continuous.	Impulsive, Non-continuous.	Continuous	Impulsive	Continuous	Impulsive.
Source Level	161.9 SPL	168.2 SPL	186.7 SS * SEL	186.7 SS * SEL	166.2 SPL	164 SS * SEL	166.2 SPL	164 SS * SEL.
Weighting Factor Adjustment (kHz).	2.5	2.5	2	2	2.5	2	2.5	2.
(a) Activity duration (time) within 24 hours.	(a) 0:40 (10 mins * 4).	(a) 1:00 (30 mins * 2).	(b) 40	(b) 100	(a) 8:00 (240 mins * 2).		(a) 5:00 (300 mins * 1).	
(b) Number of strikes per pile (impact).						(b)		(b).
(c) Number of piles per day.	(c) 4	(c) 2	(c) 2	(c) 2	(c) 2	(c) 2	(c) 1	(c) 1.
Propagation (xLogR).	15	15	15	15	15	15	15	15.
Distance of source level measurement (meters).	10	10	11	11	10	10	10	10.

Note: Data for all equipment types were for Propagation (xLogR) = 15 and distance of source level measurements was 10 meters.
* Largest isopleth distances for impact pile driving and DTH were all found when using SS SEL (see application for details) and SEL is the preferred metric.

The above input scenarios lead to a PTS isopleth distance (Level A threshold) of 1.8 to 793 meters, depending on the marine mammal group and scenario (Table 6).

TABLE 6—CALCULATED DISTANCES TO LEVEL A HARASSMENT ISOPLETHS (m) DURING PILE INSTALLATION AND REMOVAL FOR EACH HEARING GROUP

Pile size	Low frequency	Mid frequency	High frequency	Phocid	Otariid
Vibratory Pile Driving/Removal:					
30-inch piles	6	0.5	8.8	3.6	0.3
36-inch piles	20.6	1.8	30.5	12.5	0.9
48-inch piles	20.6	1.8	30.5	12.5	0.9
Impact Pile Driving:					
30-inch piles	359.9	12.8	428.7	192.6	14

TABLE 6—CALCULATED DISTANCES TO LEVEL A HARASSMENT ISOPLETHS (m) DURING PILE INSTALLATION AND REMOVAL FOR EACH HEARING GROUP—Continued

Pile size	Low frequency	Mid frequency	High frequency	Phocid	Otariid
36-inch piles	663	23.6	789.7	354.8	25.8
48-inch piles	663	23.6	789.7	354.8	25.8
Rock Anchoring (DTH):					
36-inch piles	665	24	793	356	26
48-inch piles	486	17	579	260	19

Note: A 10-meter shutdown zone will be implemented for all species and activity types to prevent direct injury of marine mammals.

Marine Mammal Occurrence

In this section we provide the information about the presence, density, or group dynamics of harbor seals, Dall's porpoise, and harbor porpoises that will inform the take calculations. There is no density data for any of the species near Ward Cove.

Harbor Seal

As discussed above anecdotal evidence suggests maximum group size is up to three individuals in Ward Cove at one time. They are known to occur year-round in the area with little seasonal variation in abundance (Freitag (2017) as cited in 83 FR 37473, August 1, 2018) and local experts estimate that there are about one to three harbor seals in Tongass Narrows every day. To be conservative we will assume a group size of five individuals in the project area each day.

Dall's Porpoise

Dall's porpoises are expected to only occur in the action area a few times per year. Their relative rarity is supported by Jefferson *et al.*'s (2019) presentation of historical survey data showing very few sightings in the Ketchikan area and conclusion that Dall's porpoise generally are rare in narrow waterways, like the Tongass Narrows. This species is non-migratory; therefore, our occurrence estimates are not dependent on season. We anticipate that one large Dall's porpoise pod (15 individuals) (Freitag (2017), as cited in 83 FR37473, August 1, 2018) may be present in the project area once each month during construction.

Harbor Porpoise

Harbor porpoises are non-migratory; therefore, our occurrence estimates are not dependent on season. Freitag ((2017) as cited in 83 FR 37473, August 1, 2018) observed harbor porpoises in Tongass Narrows zero to one time per month. Harbor porpoises observed in the project vicinity typically occur in groups of one to five animals with an estimated maximum group size of eight animals (83 FR 37473, August 1, 2018, Solstice 2018). For our impact analysis, we are considering a group to consist of five animals, a value on the high end of the typical group size. Based on Freitag (2017), and supported by the reports of knowledgeable locals as described in the application for IHA for Tongass Narrows (*https://www.fisheries.noaa.gov/action/incidental-take-authorization-alaska-department-transportation-ferry-berth-improvements*), it is estimated that a maximum two groups (10) of harbor porpoises would enter Tongass Narrows and potentially be exposed to project related noise each of the four months of the project.

Steller's Sea Lion

Steller sea lion abundance in the Tongass Narrows area is not well known. No systematic studies of Steller sea lions have been conducted in or near the Tongass Narrows area. Steller sea lions are known to occur year-round and local residents report observing Steller sea lions about once or twice per week (Tongass Narrows IHA, 2019). Abundance appears to increase during herring runs (March to May) and salmon runs (July to September). Group sizes are generally 6 to 10 individuals (Freitag (2017) as cited in 83 FR 37473, August 1, 2018) but have been reported to reach 80 animals (HDR 2003). Tongass Narrows represents an area of high anthropogenic activity that sea lions would normally avoid, but at least three seafood processing plants and two fish hatcheries may be attractants. Sea lions are generally unafraid of humans when food sources are available. For these reasons, as we did for the Tongass Narrows IHA (2019), we conservatively estimate that one group of 10 Steller sea lions may be present in the project area each day, but this occurrence rate may as much as double (20 Steller sea lions per day) during periods of increased abundance associated with the herring and salmon runs (March to May and July to September).

Take Calculation and Estimation

Here we describe how the information provided above is brought together to produce a quantitative take estimate. As noted above, the applicant only requested take of harbor seals, but we believe the cryptic nature, small size, and dive duration of Dall's porpoise and harbor porpoise, and abundance of Steller's sea lions, make it possible that these three species could also be taken by entering the Level A or Level B harassment zones before shutdown can occur (see below). We describe how we estimated their take below and summarize it in Table 7.

It is important to note that PSSA proposes to implement a shutdown of pile driving activity if any marine mammal other than these four species is observed within the Level B harassment zone (see Mitigation). Therefore, the take authorization is intended to provide insurance against the event that marine mammals occur within Level A or Level B harassment zones that cannot be fully observed by monitors. As a result of this mitigation, we do not believe that Level A harassment is a likely outcome for these three species. While the calculated Level A harassment zone is as large as 793 m for DTH of 36-in steel piles (ranging from 429 m for other impact driving scenarios), this requires that an animal be present at that range for the full assumed duration of pile strikes (expected to require multiple hours). Given the PSSA's commitment to shut down upon observation of other marine mammals, and the rarity of these animals inside Ward Cove where the Level A harassment zones will be, we do not expect that any of these other species would be present within a Level A harassment zone for sufficient duration to actually experience PTS.

Harbor Seals

The take calculation was estimated based on the conservative group size from above (five) multiplied by the number of expected groups per day multiplied by the number of days of pile driving. Based on the anecdotal

observations, it is conservatively estimated that two groups of five harbor seals may occur within the Level B harassment zone every day that pile driving may occur. Thus we estimate 5 animals in a group × 2 groups per day × 105 days = 1,050 times animals would occur within the Level B harassment zone. The Level B harassment zones areas for trestle construction and mooring dolphin construction differ in size because more sound is expected to leak out of the cove into Tongass Narrows when construction on the dolphins is toward the middle of the cove (see Figure 6 of application). Nevertheless, it is expected that most of the take will occur within Ward Cove (not Tongass Narrows) where the action areas for trestle and dolphin construction overlap and are identical in size, so take is not reduced despite the smaller area of trestle effects.

The Level A harassment zone for harbor seals for impact pile driving of 30-inch piles is 193 meters, for impact driving of 36 and 48-inch piles, the zone is 355 meters, and for the DTH scenarios it is 260–356 meters. For other pile driving activities the zones are much smaller. Impact pile driving and DTH hammering would be shut down before a harbor seal enters within 200 meters during these activities; however, take by Level A harassment of harbor seals is requested outside the 200 m shutdown zone for larger piles with zones exceeding 200 m. Impact driving would occur for no more than 10 minutes per day on 20 days of construction and DTH would occur for no more than 48 minutes per day on 20 days of construction. As above we use group size of five individuals and expect one group per day to be exposed in the Level A harassment zone. Although mere ''exposure'' within the Level A harassment zone is not indicative of an animal incurring auditory injury due to the fact that injury results from accumulation of energy over an assumed duration of exposure, we conservatively authorize 100 Level A harassment takes of harbor seal (5 animals in a group × 1 groups per day × 20 days = 100 animals). Because these animals exposed in the Level A harassment zone duplicate those exposed in the Level B zone, the authorized Level B harassment take is the number of Level B harassment zone exposures minus the Level A take or 950 animals (1,050 − 100).

Dall's Porpoise

As discussed above we assume a single group of 15 individuals in the project area each month. The take calculation was estimated based on the conservative group size from above (15) multiplied by the number of expected groups per month (1) multiplied by the number of months of pile driving for the project (4). Thus we estimate a total of 60 individuals (15 × 1 × 4) may enter the Level B harassment zone. The Level A harassment zones for Dall's porpoises for impact pile driving of 30-inch piles is 429 meters, for impact driving of 36 and 48-inch piles, the zone is 790 meters, and for the DTH scenarios it is 579–793 meters. Impact pile driving and DTH hammering would be shut down before a Dall's porpoise enters within 200 meters during these activities; however, take by Level A harassment of Dall's porpoises is requested for outside the 200 m shutdown zone for those activities with zones exceeding 200 m. We conservatively estimate that 15 individuals could be exposed to levels above the Level A harassment threshold, potentially in the form of one group entering and remaining in the Level A harassment zone long enough to be exposed above the threshold, or in the form of some smaller number being exposed in the same manner on multiple days. Thus, we authorize 15 Level A harassment takes of Dall's porpoise. Because these animals exposed in the Level A harassment zone are assumed to be a subset of those predicted to be exposed in the Level B zone, the authorized Level B harassment take is the number of Level B harassment zone exposures minus the Level A take or 45 animals (60 − 15).

Harbor Porpoise

As discussed above we assume a conservative group size of five individuals occurring no more than twice in the project area each month. The take calculation was estimated based on the group size from above (5) multiplied by the number of expected groups per month (2) multiplied by the number of months of pile driving for the project (4). Thus we estimate a total of 40 individuals (5 × 2 × 4) may enter the Level B harassment zone. The Level A harassment zones for harbor porpoises for impact pile driving of 30-inch piles is 429 meters, for impact driving of 36 and 48-inch piles, the zone is 790 meters, and for the DTH scenarios it is 579–793 meters. Impact pile driving and DTH hammering would be shut down before a harbor porpoise enters within 200 meters during these activities; however, take by Level A harassment of harbor porpoises is requested for outside the 200 m shutdown zone for those activities with zones exceeding 200 m. We conservatively estimate three groups of five individuals could be exposed in the Level A harassment zone. Thus, we authorize 15 Level A harassment takes of harbor porpoises. Because these animals exposed in the Level A harassment zone duplicate those exposed in the Level B zone, the authorized Level B harassment take is the number of Level B harassment zone exposures minus the Level A take or 25 animals (40 − 15).

Steller's Sea Lions

As described above, we anticipate that one large group (10 individuals) may be present in the Level B harassment zone once per day. However, as discussed above, we anticipate that exposure may be as much as twice this rate during March, April, May, July, August, and September, due to the increased presence of prey. Therefore, we anticipate that two large groups (20 individuals) may be present in the Level B harassment zone each day during these months. We anticipate 25 days of activity during June when there are 10 Level B harassment zone incursions per day and the rest of the project will be completed during the months when there are 20 incursions per day. Therefore, we estimate a total of 1,850 potential takes of Steller sea lions by Level B harassment (*i.e.,* 10 sea lions per day for 25 days (250) + 20 sea lions per day for 80 days (1,600) = 1,850 sea lions).

TABLE 7—AUTHORIZED AMOUNT OF TAKING, BY LEVEL A HARASSMENT AND LEVEL B HARASSMENT, BY SPECIES AND STOCK AND PERCENT OF STOCK TAKEN

Species	Authorized take		
	Level B	Level A	Percent of stock
Dall's porpoise (*Phocoenoides dalli*) Alaska Stock	45	15	<1
Harbor porpoise (*Phocoena phocoena*) Southeast Alaska Stock	25	15	4.1

TABLE 7—AUTHORIZED AMOUNT OF TAKING, BY LEVEL A HARASSMENT AND LEVEL B HARASSMENT, BY SPECIES AND STOCK AND PERCENT OF STOCK TAKEN—Continued

Species	Authorized take		
	Level B	Level A	Percent of stock
Harbor seal (*Phoca vitulina*) Clarence Strait Stock	950	100	3.8
Steller sea lion (*Eumpetopia jubatus*) Eastern DPS Stock	1,850	0	4.3

Effects of Specified Activities on Subsistence Uses of Marine Mammals

The availability of the affected marine mammal stocks or species for subsistence uses may be impacted by this activity. The subsistence uses that may be affected and the potential impacts of the activity on those uses are described below. The information from this section is analyzed to determine whether the necessary findings may be made in the Unmitigable Adverse Impact Analysis and Determination section.

Subsistence harvest of harbor seals by Alaska Natives is not prohibited by the MMPA. Since surveys of harbor seal subsistence harvest in Alaska began in 1992, there have been declines in the number of households hunting and harvesting seals in Southeast Alaska (Wolf *et al.* 2013). Subsistence harvest data for the Clarence Strait stock indicates an average annual harvest in the years 2004–2008 of 164 harbor seals (80 near Ketchikan) and an average annual harvest in the years 2011–2012 of 40 harbor seals (summarized in Muto *et al.* 2016a from Wolf *et al.* 2013). In 2008, two Steller sea lions were harvested by Ketchikan-based subsistence hunters, but this is the only record of sea lion harvest by residents of Ketchikan. In 2012, the community of Ketchikan had an estimated subsistence take of 22 harbor seals (Wolf *et al.* 2013). This is the most recent data for Ketchikan. The ADF&G has not recorded harvest of cetaceans in the area (ADF&G 2018). Hunting usually occurs in October and November (ADF&G 2009), but there are also records of relatively high harvest in May (Wolfe *et al.* 2013).

In June 2019, attempts were made by PSSA to contact the Alaska Harbor Seal Commission, the Alaska Sea Otter and Steller Sea Lion Commission, and the Ketchikan Indian Community (KIC, Federal-recognized Tribe) to discuss this project. The Alaska Harbor Seal Commission is currently not operational. Comments were not received from the Alaska Sea Otter and Steller Sea Lion Commission. PSSA met with KIC and KIC submitted comments for the Army Corps of Engineers permit for this project. They did not express concerns about subsistence hunting.

Construction activities at the project site would be expected to cause only short term, non-lethal disturbance of marine mammals. Construction activities are localized and temporary in the previously developed Ward Cove, mitigation measures will be implemented to minimize disturbance of marine mammals in the action area, and, the project will not result in significant changes to availability of subsistence resources. Impacts on the abundance or availability of either species to subsistence hunters in the region are thus not anticipated.

Mitigation

In order to issue an IHA under Section 101(a)(5)(D) of the MMPA, NMFS must set forth the permissible methods of taking pursuant to the activity, and other means of effecting the least practicable impact on the species or stock and its habitat, paying particular attention to rookeries, mating grounds, and areas of similar significance, and on the availability of the species or stock for taking for certain subsistence uses. NMFS regulations require applicants for incidental take authorizations to include information about the availability and feasibility (economic and technological) of equipment, methods, and manner of conducting the activity or other means of effecting the least practicable adverse impact upon the affected species or stocks and their habitat (50 CFR 216.104(a)(11)).

In evaluating how mitigation may or may not be appropriate to ensure the least practicable adverse impact on species or stocks and their habitat, as well as subsistence uses where applicable, we carefully consider two primary factors:

(1) The manner in which, and the degree to which, the successful implementation of the measure(s) is expected to reduce impacts to marine mammals, marine mammal species or stocks, and their habitat, as well as subsistence uses. This considers the nature of the potential adverse impact being mitigated (likelihood, scope, range). It further considers the likelihood that the measure will be effective if implemented (probability of accomplishing the mitigating result if implemented as planned), the likelihood of effective implementation (probability implemented as planned), and;

(2) the practicability of the measures for applicant implementation, which may consider such things as cost, impact on operations, and, in the case of a military readiness activity, personnel safety, practicality of implementation, and impact on the effectiveness of the military readiness activity.

The following mitigation measures are in the IHA:

- *Schedule:* Pile driving or removal must occur during daylight hours. If poor environmental conditions restrict visibility (*e.g.,* from excessive wind or fog, high Beaufort state), pile installation would be delayed;
- *Pile Driving Delay/Shut-Down:* For use of in-water heavy machinery/vessel (*e.g.,* dredge), PSSA must implement a minimum shutdown zone of 10 m radius around the pile/vessel. For vessels, PSSA must cease operations and reduce vessel speed to the minimum required to maintain steerage and safe working conditions. In addition, if an animal comes within the shutdown zone (see Table 8) of a pile being driven or removed, PSSA would shut down. The shutdown zone would only be reopened if they observe the animal exiting the zone or when a marine mammal has not been observed within the shutdown zone for a 15-minute period. If DTH or pile driving is stopped, pile installation would not commence if any marine mammals are observed anywhere within the Level A harassment zone. Pile driving activities must only be conducted during daylight hours when it is possible to visually monitor for marine mammals. If a species for which authorization has not been granted, or if a species for which authorization has been granted but the authorized takes are met, PSSA must delay or shut-down pile driving if the marine mammal approaches or is

observed within the Level A and/or B harassment zones.

TABLE 8—SHUTDOWN AND MONITORING ZONES FOR EACH ACTIVITY TYPE AND STOCK

Pile size	Harbor seal shutdown distance (m)	Harbor porpoise, Dall's porpoise shutdown distance (m)	Steller sea lion shutdown distance (m)	Other marine mammal shutdown distance (m)	Level B monitoring zone (m)
Vibratory Pile Driving/Removal:					
30-inch piles	10	10	10	3,645	3,645
36-inch piles	15	40	10	3,645	3,645
48-inch piles	15	40	10	3,645	3,645
Impact Pile Driving:					
30-inch piles	200	200	20	3,645	3,645
36-inch piles	200	200	30	3,645	3,645
48-inch piles	200	200	30	3,645	3,645
Rock Anchoring (DTH):					
36-inch piles	200	200	30	3,645	3,645
48-inch piles	200	200	20	3,645	3,645
All Other Activities:					
Any activity	10	10	10	N/A	N/A

Note: A Level A monitoring zone is implemented for DTH and impact pile driving of 30 to 48-inch diameter piles out to the extent of the Level A harassment zone (793 m). Level B monitoring zone (for the four species with authorized take) and other marine mammal shutdown distance of 3,645 m reflects the farthest distance before sound is inhibited by land.

- *Soft-start:* For all impact pile driving, a ''soft start'' technique must be used at the beginning of each pile installation day, or if pile driving has ceased for more than 30 minutes, to allow any marine mammal that may be in the immediate area to leave before hammering at full energy. The soft start requires PSSA to provide an initial set of three strikes from the impact hammer at reduced energy, followed by a 30 second waiting period, then two subsequent three-strike sets. If any marine mammal is sighted within the Level A shutdown zone prior to pile-driving, or during the soft start, PSSA must delay pile-driving until the animal is confirmed to have moved outside and is on a path away from the Level A harassment zone or if 15 minutes have elapsed since the last sighting;
- *Sediment control:* All material that comes out of the top of the pile during pile driving (drill cutting discharge) must be collected on a barge and transported to a permitted upland location for disposal. Pile driving, temporary pile removal, and collection of excavated material operations must be surrounded by a 50-feet (15 m) deep silt curtain; and
- *Other best management practices:* PSSA will drive all piles with a vibratory hammer to the maximum extent possible (*i.e.,* until a desired depth is achieved or to refusal) prior to using an impact hammer. PSSA will also use the minimum hammer energy needed to safely install the piles.

Based on our evaluation of the applicant's proposed measures, NMFS has determined that the mitigation measures provide the means effecting the least practicable impact on the affected species or stocks and their habitat, paying particular attention to rookeries, mating grounds, and areas of similar significance, and on the availability of such species or stock for subsistence uses.

Monitoring and Reporting

In order to issue an IHA for an activity, Section 101(a)(5)(D) of the MMPA states that NMFS must set forth requirements pertaining to the monitoring and reporting of such taking. The MMPA implementing regulations at 50 CFR 216.104(a)(13) indicate that requests for authorizations must include the suggested means of accomplishing the necessary monitoring and reporting that will result in increased knowledge of the species and of the level of taking or impacts on populations of marine mammals that are expected to be present in the proposed action area. Effective reporting is critical both to compliance as well as ensuring that the most value is obtained from the required monitoring.

Monitoring and reporting requirements prescribed by NMFS should contribute to improved understanding of one or more of the following:

- Occurrence of marine mammal species or stocks in the area in which take is anticipated (*e.g.,* presence, abundance, distribution, density);
- Nature, scope, or context of likely marine mammal exposure to potential stressors/impacts (individual or cumulative, acute or chronic), through better understanding of: (1) Action or environment (*e.g.,* source characterization, propagation, ambient noise); (2) affected species (*e.g.,* life history, dive patterns); (3) co-occurrence of marine mammal species with the action; or (4) biological or behavioral context of exposure (*e.g.,* age, calving or feeding areas);
- Individual marine mammal responses (behavioral or physiological) to acoustic stressors (acute, chronic, or cumulative), other stressors, or cumulative impacts from multiple stressors;
- How anticipated responses to stressors impact either: (1) Long-term fitness and survival of individual marine mammals; or (2) populations, species, or stocks;
- Effects on marine mammal habitat (*e.g.,* marine mammal prey species, acoustic habitat, or other important physical components of marine mammal habitat); and
- Mitigation and monitoring effectiveness.

Visual Monitoring

Monitoring must be conducted 30 minutes before, during, and 30 minutes after pile driving and removal activities. In addition, observers shall record all incidents of marine mammal occurrence, regardless of distance from activity, and shall document any behavioral reactions in concert with distance from piles being driven or removed. Pile driving activities include the time to install a single pile or series

of piles, as long as the time elapsed between uses of the pile driving equipment is no more than 30 minutes.

Four PSO's will be used to monitor the project and their locations are shown in Figure 12 of the monitoring plan. A primary PSO must be placed near the project site in Ward Cove where pile driving would occur. The primary purpose of this observer is to monitor and implement the Level A shutdown and monitoring zones. Three additional PSOs must be positioned in order to focus on monitoring the Level B harassment and other species shutdown zone. PSOs would scan the waters using binoculars, and/or spotting scopes, and would use a handheld GPS or range-finder device to verify the distance to each sighting from the project site. All PSOs would be trained in marine mammal identification and behaviors and are required to have no other project-related tasks while conducting monitoring. The following measures also apply to visual monitoring:

(1) Monitoring must be conducted by NMFS-approved qualified observers, who will be placed at the best vantage point(s) practicable to monitor for marine mammals and implement shutdown/delay procedures when applicable by calling for the shutdown to the hammer operator. Qualified observers are trained biologists, with the following minimum qualifications:

(a) Visual acuity in both eyes (correction is permissible) sufficient for discernment of moving targets at the water's surface with ability to estimate target size and distance; use of binoculars may be necessary to correctly identify the target;

(b) Advanced education in biological science or related field (undergraduate degree or higher required);

(c) Experience and ability to conduct field observations and collect data according to assigned protocols (this may include academic experience);

(d) Experience or training in the field identification of marine mammals, including the identification of behaviors;

(e) Sufficient training, orientation, or experience with the construction operation to provide for personal safety during observations;

(f) Writing skills sufficient to prepare a report of observations including but not limited to the number and species of marine mammals observed; dates and times when in-water construction activities were conducted; dates and times when in-water construction activities were suspended to avoid potential incidental injury from construction sound of marine mammals observed within a defined shutdown zone; and marine mammal behavior; and

(g) Ability to communicate orally, by radio or in person, with project personnel to provide real-time information on marine mammals observed in the area as necessary; and

(2) PSSA shall submit observer Curriculum vitae for approval by NMFS.

A draft marine mammal monitoring report would be submitted to NMFS within 90 days after the completion of pile driving and removal activities, or 60 days prior to a requested date of issuance of any future IHAs for projects at the same location, whichever comes first. It will include an overall description of work completed, a narrative regarding marine mammal sightings, and associated marine mammal observation data sheets. Specifically, the report must include:

- Dates and times (begin and end) of all marine mammal monitoring;
- Construction activities occurring during each daily observation period, including how many and what type of piles were driven or removed and by what method (*i.e.,* impact or vibratory);
- Weather parameters and water conditions during each monitoring period (*e.g.,* wind speed, percent cover, visibility, sea state);
- The number of marine mammals observed, by species, relative to the pile location and if pile driving or removal was occurring at time of sighting;
- Age and sex class, if possible, of all marine mammals observed;
- PSO locations during marine mammal monitoring;
- Distances and bearings of each marine mammal observed to the pile being driven or removed for each sighting (if pile driving or removal was occurring at time of sighting);
- Description of any marine mammal behavior patterns during observation, including direction of travel and estimated time spent within the Level A and Level B harassment zones while the source was active;
- Number of individuals of each species (differentiated by month as appropriate) detected within the monitoring zone, and estimates of number of marine mammals taken, by species (a correction factor may be applied to total take numbers, as appropriate);
- Detailed information about any implementation of any mitigation triggered (*e.g.,* shutdowns and delays), a description of specific actions that ensued, and resulting behavior of the animal, if any;
- Description of attempts to distinguish between the number of individual animals taken and the number of incidences of take, such as ability to track groups or individuals; and
- An extrapolation of the estimated takes by Level B harassment based on the number of observed exposures within the Level B harassment zone and the percentage of the Level B harassment zone that was not visible, when applicable.

If no comments are received from NMFS within 30 days, the draft final report will constitute the final report. If comments are received, a final report addressing NMFS comments must be submitted within 30 days after receipt of comments.

Reporting Injured or Dead Marine Mammals

In the event that personnel involved in the construction activities discover an injured or dead marine mammal, PSSA shall report the incident to the Office of Protected Resources (OPR), NMFS and to the regional stranding coordinator as soon as feasible. If the death or injury was clearly caused by the specified activity, the IHA-holder must immediately cease the specified activities until NMFS is able to review the circumstances of the incident and determine what, if any, additional measures are appropriate to ensure compliance with the terms of the IHA. The IHA-holder must not resume their activities until notified by NMFS. The report must include the following information:

- Time, date, and location (latitude/longitude) of the first discovery (and updated location information if known and applicable);
- Species identification (if known) or description of the animal(s) involved;
- Condition of the animal(s) (including carcass condition if the animal is dead);
- Observed behaviors of the animal(s), if alive;
- If available, photographs or video footage of the animal(s); and
- General circumstances under which the animal was discovered.

Negligible Impact Analysis and Determination

NMFS has defined negligible impact as an impact resulting from the specified activity that cannot be reasonably expected to, and is not reasonably likely to, adversely affect the species or stock through effects on annual rates of recruitment or survival (50 CFR 216.103). A negligible impact finding is based on the lack of likely adverse effects on annual rates of recruitment or survival (*i.e.,* population-

level effects). An estimate of the number of takes alone is not enough information on which to base an impact determination. In addition to considering estimates of the number of marine mammals that might be ''taken'' through harassment, NMFS considers other factors, such as the likely nature of any responses (*e.g.,* intensity, duration), the context of any responses (*e.g.,* critical reproductive time or location, migration), as well as effects on habitat, and the likely effectiveness of the mitigation. We also assess the number, intensity, and context of estimated takes by evaluating this information relative to population status. Consistent with the 1989 preamble for NMFS's implementing regulations (54 FR 40338; September 29, 1989), the impacts from other past and ongoing anthropogenic activities are incorporated into this analysis via their impacts on the environmental baseline (*e.g.,* as reflected in the regulatory status of the species, population size and growth rate where known, ongoing sources of human-caused mortality, or ambient noise levels).

Pile driving and drilling activities have the potential to disturb or displace marine mammals and, infrequently, cause low levels of permanent hearing impairment. Specifically, the project activities may result in take, in the form of Level A harassment and Level B harassment from underwater sounds generated from pile driving and removal and DTH. Potential takes could occur if individuals are present in the ensonified zone when these activities are underway.

The takes from Level A and Level B harassment will be due to potential behavioral disturbance, TTS, and PTS. No mortality is anticipated given the nature of the activity and measures designed to minimize the possibility of injury to marine mammals. The potential for harassment is minimized through the construction method and the implementation of the planned mitigation measures (see Mitigation section).

The Level A harassment zones identified in Table 8 are based upon an animal exposed to impact pile driving multiple piles per day. Considering duration of impact driving each pile (up to 3 minutes) and breaks between pile installations (to reset equipment and move pile into place), this means an animal would have to remain within the area estimated to be ensonified above the Level A harassment threshold for multiple hours. This is highly unlikely given marine mammal movement throughout the area. If an animal was exposed to accumulated sound energy, the resulting PTS would likely be small (*e.g.,* PTS onset) at lower frequencies where pile driving energy is concentrated.

Behavioral responses of marine mammals to pile driving at the project site, if any, are expected to be mild and temporary. Marine mammals within the Level B harassment zone may not show any visual cues they are disturbed by activities (as noted during modification to the Kodiak Ferry Dock) or could become alert, avoid the area, leave the area, or display other mild responses that are not observable such as changes in vocalization patterns. Given the short duration of noise-generating activities per day and that pile driving and removal will occur across 4–5 months, any harassment would be temporary. There are no other areas or times of known biological importance for any of the affected species.

In addition, it is unlikely that minor noise effects in a small, localized area of habitat would have any effect on the stocks' ability to recover. In combination, we believe that these factors, as well as the available body of evidence from other similar activities, demonstrate that the potential effects of the specified activities will have only minor, short-term effects on individuals that would not impact the fitness of any individuals. The specified activities are not expected to impact rates of recruitment or survival and will therefore not result in population-level impacts.

In summary and as described above, the following factors primarily support our determination that the impacts resulting from this activity are not expected to adversely affect the species or stock through effects on annual rates of recruitment or survival:

- No serious injury or mortality is anticipated or authorized;
- Authorized Level A harassment will be small amounts and of low degree;
- PSSA will implement mitigation measures such as vibratory driving piles to the maximum extent practicable, soft-starts, silt curtains, removal of potentially contaminated sediments, and shut downs; and
- Monitoring reports from similar work in Alaska have documented little to no effect on individuals of the same species impacted by the specified activities.

Based on the analysis contained herein of the likely effects of the specified activity on marine mammals and their habitat, and taking into consideration the implementation of the proposed monitoring and mitigation measures, NMFS finds that the total marine mammal take from the proposed activity will have a negligible impact on all affected marine mammal species or stocks.

Small Numbers

As noted above, only small numbers of incidental take may be authorized under Section 101(a)(5)(D) of the MMPA for specified activities other than military readiness activities. The MMPA does not define small numbers and so, in practice, where estimated numbers are available, NMFS compares the number of individuals taken to the most appropriate estimation of abundance of the relevant species or stock in our determination of whether an authorization is limited to small numbers of marine mammals. Additionally, other qualitative factors may be considered in the analysis, such as the temporal or spatial scale of the activities.

The amount of take NMFS proposes to authorize is less than one third for all stocks (in fact, less than 5 percent for harbor seals, Steller sea lions, and harbor porpoises). The Alaska stock of Dall's porpoise has no official NMFS abundance estimate as the most recent estimate is greater than eight years old. Nevertheless, the most recent estimate was 83,400 animals and it is highly unlikely this number has drastically declined. Therefore, the 60 authorized takes of this stock clearly represent small numbers of this stock. These are all likely conservative estimates because they assume all takes are of different individual animals which is likely not the case. Some individuals may return across multiple days but have been included as separate instances of take in our estimates.

Based on the analysis contained herein of the proposed activity (including the proposed mitigation and monitoring measures) and the anticipated take of marine mammals, NMFS finds that small numbers of marine mammals will be taken relative to the population size of the affected species or stocks.

Unmitigable Adverse Impact Analysis and Determination

In order to issue an IHA, NMFS must find that the specified activity will not have an ''unmitigable adverse impact'' on the subsistence uses of the affected marine mammal species or stocks by Alaskan Natives. NMFS has defined ''unmitigable adverse impact'' in 50 CFR 216.103 as an impact resulting from the specified activity: (1) That is likely to reduce the availability of the species to a level insufficient for a harvest to meet subsistence needs by: (i) Causing the marine mammals to abandon or avoid

hunting areas; (ii) Directly displacing subsistence users; or (iii) Placing physical barriers between the marine mammals and the subsistence hunters; and (2) That cannot be sufficiently mitigated by other measures to increase the availability of marine mammals to allow subsistence needs to be met.

As discussed above in the Effects of Specified Activities on Subsistence Uses of Marine Mammals section, subsistence harvest of harbor seals and other marine mammals is rare in the area and local subsistence users have not expressed concern about this project. All project activities will take place within the industrial area of Tongass Narrows and Ward Cove immediately adjacent to Ketchikan where subsistence activities do not generally occur. The project also will not have an adverse impact on the availability of marine mammals for subsistence use at locations farther away, where these construction activities are not expected to take place. Some minor, short-term harassment of the harbor seals could occur, but any effects on subsistence harvest activities in the region will be minimal, and not have an adverse impact.

Based on the effects and location of the specified activity, and the mitigation and monitoring measures, NMFS has determined that there will not be an unmitigable adverse impact on subsistence uses from PSSA's planned activities.

National Environmental Policy Act

To comply with the National Environmental Policy Act of 1969 (NEPA; 42 U.S.C. 4321 *et seq.*) and NOAA Administrative Order (NAO) 216–6A, NMFS must review our proposed action (*i.e.,* the issuance of an IHA) with respect to potential impacts on the human environment. This action is consistent with categories of activities identified in Categorical Exclusion B4 (IHAs with no anticipated serious injury or mortality) of the Companion Manual for NOAA Administrative Order 216–6A, which do not individually or cumulatively have the potential for significant impacts on the quality of the human environment and for which we have not identified any extraordinary circumstances that would preclude this categorical exclusion. Accordingly, NMFS has determined that the issuance of the IHA qualifies to be categorically excluded from further NEPA review.

Endangered Species Act (ESA)

Section 7(a)(2) of the Endangered Species Act of 1973 (ESA: 16 U.S.C. 1531 *et seq.*) requires that each Federal agency insure that any action it authorizes, funds, or carries out is not likely to jeopardize the continued existence of any endangered or threatened species or result in the destruction or adverse modification of designated critical habitat. To ensure ESA compliance for the issuance of IHAs, NMFS consults internally, in this case with the Alaska Region Protected Resources Division Office, whenever we propose to authorize take for endangered or threatened species.

No incidental take of ESA-listed species is proposed for authorization or expected to result from this activity. Therefore, NMFS has determined that formal consultation under section 7 of the ESA is not required for this action.

Authorization

NMFS has issued an IHA to PSSA for the potential harassment of small numbers of three marine mammal species incidental to the Ward Cove Cruise Ship Dock project near Ketchikan, Alaska, provided the previously mentioned mitigation, monitoring and reporting requirements are incorporated.

Dated: May 18, 2020.

Donna S. Wieting,

Director, Office of Protected Resources, National Marine Fisheries Service.

[FR Doc. 2020–11116 Filed 5–21–20; 8:45 am]

BILLING CODE 3510–22–P

DEPARTMENT OF COMMERCE

National Oceanic and Atmospheric Administration

[RTID 0648–XA187]

New England Fishery Management Council; Public Meeting

AGENCY: National Marine Fisheries Service (NMFS), National Oceanic and Atmospheric Administration (NOAA), Commerce.

ACTION: Notice of a public meeting.

SUMMARY: The New England Fishery Management Council (Council) is scheduling a public meeting via webinar of its Herring Committee via webinar to consider actions affecting New England fisheries in the exclusive economic zone (EEZ). Recommendations from this group will be brought to the full Council for formal consideration and action, if appropriate.

DATES: This webinar will be held on Tuesday, June 9, 2020 at 1:30 p.m. Webinar registration URL information: *https://attendee.gotowebinar.com/register/9191770280507473165.*

ADDRESSES: *Council address:* New England Fishery Management Council, 50 Water Street, Mill 2, Newburyport, MA 01950.

FOR FURTHER INFORMATION CONTACT: Thomas A. Nies, Executive Director, New England Fishery Management Council; telephone: (978) 465–0492.

SUPPLEMENTARY INFORMATION:

Agenda

The Herring Committee will discuss preliminary Plan Development Team (PDT) analyses and potential range of alternatives to consider in Framework 8, an action considering herring fishery specifications for FY 2021–23 and adjustment of measures in the Herring Fishery Management Plan that potentially inhibit the mackerel fishery from achieving optimum yield. They will also discuss preliminary PDT analyses and potential range of alternatives to consider in Framework 7, an action to protect spawning of Atlantic herring on Georges Bank. Other business may be discussed if time permits, including: (1) Brief review of NROC/MARCO/RODA fishery dependent data project and request for feedback (Dr. Fiona Hogan); (2) introduction of the Executive Order on Promoting Seafood Competitiveness and Economic Growth.

Although non-emergency issues not contained on the agenda may come before this Council for discussion, those issues may not be the subject of formal action during this meeting. Council action will be restricted to those issues specifically listed in this notice and any issues arising after publication of this notice that require emergency action under section 305(c) of the Magnuson-Stevens Act, provided the public has been notified of the Council's intent to take final action to address the emergency. The public also should be aware that the meeting will be recorded. Consistent with 16 U.S.C. 1852, a copy of the recording is available upon request.

Special Accommodations

This meeting is physically accessible to people with disabilities. Requests for sign language interpretation or other auxiliary aids should be directed to Thomas A. Nies, Executive Director, at (978) 465–0492, at least 5 days prior to the meeting date.

Authority: 16 U.S.C. 1801 *et seq.*

Dated: May 19, 2020.

Tracey L. Thompson,

Acting Deputy Director, Office of Sustainable Fisheries, National Marine Fisheries Service.

[FR Doc. 2020–11089 Filed 5–21–20; 8:45 am]

BILLING CODE 3510–22–P

DEPARTMENT OF COMMERCE

National Oceanic and Atmospheric Administration

[RTID 0648–XA185]

Pacific Fishery Management Council; Public Meetings

AGENCY: National Marine Fisheries Service, National Oceanic and Atmospheric Administration, Commerce.

ACTION: Notice of public meetings.

SUMMARY: The Pacific Fishery Management Council (Pacific Council) and its advisory entities will hold public meetings.

DATES: The Pacific Council and its advisory entities will meet June 10–12 and June 15–19, 2020, noting there will be no meetings on Saturday, June 13 and Sunday, June 14. The Pacific Council meeting will begin on Friday, June 12, 2020 at 8 a.m. Pacific Daylight Time (PDT), reconvening at 8 a.m. Monday, June 15, and each day through Friday, June 19, 2020. All meetings are open to the public, except a Closed Session will be held from 8 a.m. to 9 a.m., Friday, June 12, to address litigation and personnel matters. The Pacific Council will meet as late as necessary each day to complete its scheduled business.

ADDRESSES: Meetings of the Pacific Council and its advisory entities will be webinar only.

Council address: Pacific Fishery Management Council, 7700 NE Ambassador Place, Suite 101, Portland, OR 97220. Instructions for attending the meeting via live stream broadcast are given under **SUPPLEMENTARY INFORMATION**, below.

FOR FURTHER INFORMATION CONTACT: Mr. Chuck Tracy, Executive Director; telephone: (503) 820–2280 or (866) 806–7204 toll-free; or access the Pacific Council website, *http://www.pcouncil.org* for the proposed agenda and meeting briefing materials.

SUPPLEMENTARY INFORMATION: The June 12 and 15–19, 2020 meeting of the Pacific Council will be streamed live on the internet. The broadcasts begin initially at 9 a.m. PDT Friday, June 12, 2020 and continue at 8 a.m. Monday, June 15 daily through Friday, June 19. No meetings are scheduled for Saturday, June 13 through Sunday, June 14, 2020. Broadcasts end when business for the day is complete. Only the audio portion and presentations displayed on the screen at the Pacific Council meeting will be broadcast. The audio portion for the public is listen-only except that an opportunity for oral public comment will be provided prior to Council Action on each agenda item. You can attend the webinar online using a computer, tablet, or smart phone, using the webinar application. Specific meeting information, including directions on how to join the meeting and system requirements will be provided in the meeting announcement on the Pacific Council's website (see *www.pcouncil.org*). It is recommended that you use a computer headset to listen to the meeting, but you may use your telephone for the audio-only portion of the meeting.

The following items are on the Pacific Council agenda, but not necessarily in this order. Agenda items noted as ''Final Action'' refer to actions requiring the Council to transmit a proposed fishery management plan, proposed plan amendment, or proposed regulations to the U.S. Secretary of Commerce, under sections 304 or 305 of the Magnuson-Stevens Fishery Conservation and Management Act. Additional detail on agenda items, Council action, advisory entity meeting times, and meeting rooms are described in Agenda Item A.4, Proposed Council Meeting Agenda, and will be in the advance June 2020 briefing materials and posted on the Pacific Council website at *www.pcouncil.org* no later than Friday, May 22, 2020.

A. Call to Order
1. Opening Remarks
2. Roll Call
3. Executive Director's Report
4. Approve Agenda

B. Open Comment Period
1. Comments on Non-Agenda Items

C. Administrative Matters
1. National Marine Fisheries Service Report
2. Fiscal Matters
3. Approval of Council Meeting Record
4. Membership Appointments and Council Operating Procedures
5. Future Council Meeting Agenda and Workload Planning

D. Highly Migratory Species Management
1. International Management Activities

E. Salmon Management
1. Southern Oregon/Northern California Coast Coho Endangered Species Act (ESA) Consultation Update
2. Southern Resident Killer Whale (SRKW) ESA Consultation Update
3. Amendment 20: Annual Management Schedule and Boundary Change

F. Groundfish Management
1. Final Action to Adopt Management Measures and Exempted Fishing Permits for 2021–22 Fisheries
2 Stock Assessment Plan and Terms of Reference (TOR)—Final Action
3. Electronic Monitoring Program—Final Action
4. Inseason Adjustments—Final Action

G. Coastal Pelagic Species Management
1. Sardine Rebuilding Plan

Advisory Body Agendas

Advisory body agendas will include discussions of relevant issues that are on the Pacific Council agenda for this meeting and may also include issues that may be relevant to future Council meetings. Proposed advisory body agendas for this meeting will be available on the Pacific Council website *https://www.pcouncil.org/* no later than Friday, May 22, 2020.

Schedule of Ancillary Meetings

Day 1—Wednesday, June 10, 2020

Coastal Pelagic Species Advisory Subpanel 8 a.m.
Coastal Pelagic Species Management Team 8 a.m.
Groundfish Management Team 8 a.m.
Habitat Committee 8 a.m.
Highly Migratory Species Advisory Subpanel 8 a.m.
Highly Migratory Species Management Team 8 a.m.
Scientific and Statistical Committee 8 a.m.

Day 2—Thursday, June 11, 2020

Coastal Pelagic Species Advisory Subpanel 8 a.m.
Coastal Pelagic Species Management Team 8 a.m.
Groundfish Advisory Subpanel 8 a.m.
Groundfish Management Team 8 a.m.
Habitat Committee 8 a.m.
Highly Migratory Species Advisory Subpanel 8 a.m.
Highly Migratory Species Management Team 8 a.m.
Scientific and Statistical Committee 8 a.m.

Day 3—Friday, June 12, 2020

California State Delegation 7 a.m.
Oregon State Delegation 7 a.m.
Washington State Delegation 7 a.m.
Coastal Pelagic Species Advisory Subpanel 8 a.m.
Coastal Pelagic Species Management Team 8 a.m.
Groundfish Advisory Subpanel 8 a.m.
Groundfish Management Team 8 a.m.
Enforcement Consultants 8 a.m.

** No meetings scheduled for Saturday, June 13 through Sunday, June 14, 2020.*

Day 4—Monday, June 15, 2020

California State Delegation 7 a.m.

Oregon State Delegation 7 a.m.
Washington State Delegation 7 a.m.
Groundfish Advisory Subpanel 8 a.m.
Groundfish Management Team 8 a.m.
Enforcement Consultants As Necessary

Day 5—Tuesday, June 16, 2020

California State Delegation 7 a.m.
Oregon State Delegation 7 a.m.
Washington State Delegation 7 a.m.
Groundfish Advisory Subpanel 8 a.m.
Groundfish Management Team 8 a.m.
Enforcement Consultants As Necessary

Day 6—Wednesday, June 17, 2020

California State Delegation 7 a.m.
Oregon State Delegation 7 a.m.
Washington State Delegation 7 a.m.
Groundfish Advisory Subpanel 8 a.m.
Groundfish Management Team 8 a.m.
Enforcement Consultants As Necessary

Day 7—Thursday, June 18, 2020

California State Delegation 7 a.m.
Oregon State Delegation 7 a.m.
Washington State Delegation 7 a.m.
Groundfish Management Team 8 a.m.
Enforcement Consultants As Necessary

Day 8—Friday, June 19, 2020

California State Delegation 7 a.m.
Oregon State Delegation 7 a.m.
Washington State Delegation 7 a.m.

Although non-emergency issues not contained in this agenda may come before the Pacific Council for discussion, those issues may not be the subject of formal Council action during this meeting. Council action will be restricted to those issues specifically listed in this notice and any issues arising after publication of this notice that require emergency action under section 305(c) of the Magnuson-Stevens Fishery Conservation and Management Act, provided the public has been notified of the Pacific Council's intent to take final action to address the emergency.

Special Accommodations

These meetings are physically accessible to people with disabilities. Requests for sign language interpretation or other auxiliary aids should be directed to Mr. Kris Kleinschmidt at (503) 820–2412 at least 10 business days prior to the meeting date.

Authority: 16 U.S.C. 1801 *et seq.*

Dated: May 19, 2020.

Tracey L. Thompson,

Acting Deputy Director, Office of Sustainable Fisheries, National Marine Fisheries Service.

[FR Doc. 2020–11087 Filed 5–21–20; 8:45 am]

BILLING CODE 3510–22–P

DEPARTMENT OF COMMERCE

National Oceanic and Atmospheric Administration

[RTID 0648–XA188]

New England Fishery Management Council; Public Meeting

AGENCY: National Marine Fisheries Service (NMFS), National Oceanic and Atmospheric Administration (NOAA), Commerce.

ACTION: Notice of a public meeting.

SUMMARY: The New England Fishery Management Council (Council) is scheduling a public meeting via webinar of its Herring Advisory Panel via webinar to consider actions affecting New England fisheries in the exclusive economic zone (EEZ). Recommendations from this group will be brought to the full Council for formal consideration and action, if appropriate.

DATES: This webinar will be held on Tuesday, June 9, 2020 at 8:30 a.m. Webinar registration URL information: *https://attendee.gotowebinar.com/register/9191770280507473165.*

ADDRESSES: *Council address:* New England Fishery Management Council, 50 Water Street, Mill 2, Newburyport, MA 01950.

FOR FURTHER INFORMATION CONTACT: Thomas A. Nies, Executive Director, New England Fishery Management Council; telephone: (978) 465–0492.

SUPPLEMENTARY INFORMATION:

Agenda

The Advisory Panel will discuss preliminary Plan Development Team (PDT) analyses and potential range of alternatives to consider in Framework 8, an action considering herring fishery specifications for FY 2021–23 and adjustment of measures in the Herring Fishery Management Plan that potentially inhibit the mackerel fishery from achieving optimum yield. They will also discuss preliminary PDT analyses and potential range of alternatives to consider in Framework 7, an action to protect spawning of Atlantic herring on Georges Bank. Other business may be discussed if time permits, including: (1) Brief review of NROC/MARCO/RODA fishery dependent data project and request for feedback (Dr. Fiona Hogan); (2) introduction of the Executive Order on Promoting Seafood Competitiveness and Economic Growth.

Although non-emergency issues not contained on the agenda may come before this Council for discussion, those issues may not be the subject of formal action during this meeting. Council action will be restricted to those issues specifically listed in this notice and any issues arising after publication of this notice that require emergency action under section 305(c) of the Magnuson-Stevens Act, provided the public has been notified of the Council's intent to take final action to address the emergency. The public also should be aware that the meeting will be recorded. Consistent with 16 U.S.C. 1852, a copy of the recording is available upon request.

Special Accommodations

This meeting is physically accessible to people with disabilities. Requests for sign language interpretation or other auxiliary aids should be directed to Thomas A. Nies, Executive Director, at (978) 465–0492, at least 5 days prior to the meeting date.

Authority: 16 U.S.C. 1801 *et seq.*

Dated: May 19, 2020.

Tracey L. Thompson,

Acting Deputy Director, Office of Sustainable Fisheries, National Marine Fisheries Service.

[FR Doc. 2020–11090 Filed 5–21–20; 8:45 am]

BILLING CODE 3510–22–P

DEPARTMENT OF COMMERCE

National Oceanic and Atmospheric Administration

Establishing an Advisory Council Pursuant to the National Marine Sanctuaries Act and Solicitation for Applications for the Mallows Bay-Potomac River National Marine Sanctuary Advisory Council

AGENCY: Office of National Marine Sanctuaries (ONMS), National Ocean Service (NOS), National Oceanic and Atmospheric Administration (NOAA), Department of Commerce (DOC).

ACTION: Notice of solicitation.

SUMMARY: Notice is hereby given that NOAA is establishing a national marine sanctuary advisory council for the Mallows Bay-Potomac River National Marine Sanctuary (MPNMS) which was designated on September 3, 2019. The council will provide advice and recommendations to ONMS regarding the sanctuary management plan and will serve as liaisons between the sanctuary and constituents and community groups. ONMS is adding this council to the list of established national marine sanctuary advisory councils. ONMS solicits applications to fill council seats on an as needed basis and is now seeking applicants for seats on the MPNMS Sanctuary Advisory

Council. This notice contains web page links and contact information for the ONMS and application materials to apply for the advisory council.

DATES: Applications for membership on the Mallows Bay-Potomac River Sanctuary Advisory Council need to be received by July 1, 2020.

ADDRESSES: For further information contact: Sammy (Paul) Orlando c/o NOAA Office of National Marine Sanctuaries, c/o NOAA Chesapeake Bay Office, 200 Harry S Truman Parkway, Room 460, Annapolis, MD 21401, or call 240–460–1978, email *paul.orlando@noaa.gov,* or fax 302–200–7182.

SUPPLEMENTARY INFORMATION:

I. Background

Section 315 of the National Marine Sanctuaries Act (NMSA) (16 U.S.C. 1445a) authorizes the Secretary of Commerce to establish advisory councils to advise and make recommendations regarding the designation and management of national marine sanctuaries. ONMS is establishing a new sanctuary advisory council for the MPNMS to serve as a liaison with the local community and to provide guidance and advice to ONMS regarding the sanctuary management plan. Through this notice, ONMS is establishing the advisory council for the MPNMS and soliciting applications for all seats. Applications are due July 1, 2020.

II. Office of National Marine Sanctuaries (ONMS)

ONMS serves as the trustee for a network of underwater parks encompassing more than 600,000 square miles of marine and Great Lakes waters from Washington State to the Florida Keys, and from Lake Huron to American Samoa. The network includes a system of 14 national marine sanctuaries and the Papahānaumokuākea and Rose Atoll marine national monuments. National marine sanctuaries protect our nation's most vital coastal and marine natural and cultural resources, and through active research, management, and public engagement, sustain healthy environments that are the foundation for thriving communities and stable economies.

One of the many ways ONMS ensures public participation in the designation and management of national marine sanctuaries is through the formation of advisory councils. Advisory councils are community-based groups established to provide advice and recommendations to ONMS on issues including management, science, service, and stewardship, as well as to serve as liaisons between their constituents in the community and the site. Pursuant to Section 315(a) of the NMSA, advisory councils are exempt from the requirements of the Federal Advisory Committee Act. Additional information on ONMS and its advisory councils can be found at *http://sanctuaries.noaa.gov.*

III. Advisory Council Membership

According to section 315 of the NMSA, advisory council members may be appointed from among: (1) Persons employed by federal or state agencies with expertise in natural resources management; (2) members of relevant regional fishery management councils; and (3) representatives of local user groups, conservation and other public interest organizations, scientific organizations, educational organizations, or others interested in the protection and multiple use management of sanctuary resources (16 U.S.C. 1455 a(b)).

The charter for each advisory council defines the number and type of seats and positions on the council. The advisory council charter for the MPNMS identifies the following non-governmental voting seat types: Maritime archaeology and history; cultural heritage; recreation; recreational fishing; business and economic development; tourism and marketing; education; research, science and technology; commercial fishing; and citizen-at-large. Additionally, the council will also have non-voting seats for: (1) NOAA; (2) the State of Maryland, Department of Planning; (3) Maryland Department of Natural Resources; (4) Charles County, Maryland; (5) several other government agencies with installations adjacent to the sanctuary boundaries (including Department of Navy/Department of Defense, U.S. Coast Guard, State of Virginia); (6) three state-recognized Tribes: Piscataway Conoy Tribe (MD), Piscataway Indian Tribe (MD), and Patawomeck Indian Tribe of Virginia (VA); and (7) youth (ages 14–17 at the time of application).

For each of the existing advisory councils, applicants are chosen based upon their particular expertise and experience in relation to the seat for which they are applying; community and professional affiliations; views regarding the protection and management of marine or Great Lakes resources; and possibly (though not required) the length of residence in the area affected by the site. Council members and alternates for the MPNMS Sanctuary Advisory Council serve three-year terms, as reflected in the signed charter.

More information on advisory council membership and processes, and materials related to the purpose, policies, and operational requirements for advisory councils can be found in the charter for a particular advisory council (*https://sanctuaries.noaa.gov/management/ac/council_charters.html*) and the National Marine Sanctuary Advisory Council Implementation Handbook (*https://nmssanctuaries.blob.core.windows.net/sanctuaries-prod/media/archive/management/pdfs/2010-ac-handbook-appendices-07162015.pdf*). For more information about the new advisory council for the Mallows Bay-Potomac River National Marine Sanctuary, including seat descriptions and application materials, please visit *https://sanctuaries.noaa.gov/mallows-potomac.*

B. Paperwork Reduction Act

ONMS has a valid Office of Management and Budget (OMB) control number (0648–0397) for the collection of public information related to the processing of ONMS national marine sanctuary advisory council applications across the National Marine Sanctuary System. Establishing a sanctuary advisory council for the MPNMS fits within the estimated reporting burden under that control number. See *https://www.reginfo.gov/public/do/PRASearch* (Enter Control Number 0648–0397). Therefore, ONMS will not request an update to the reporting burden certified for OMB control number 0648–0397.

Send comments regarding this burden estimate, or any other aspect of this data collection, including suggestions for reducing the burden, to: Office of National Marine Sanctuaries, 1305 East West Highway, N/NMS, Silver Spring, Maryland 20910.

Notwithstanding any other provisions of the law, no person is required to respond to, nor shall any person be subject to a penalty for failure to comply with a collection of information subject to the requirements of the Paperwork Reduction Act (PRA), 44 U.S.C. 3501 *et seq.,* unless that collection of information displays a currently valid Office of Management and Budget (OMB) control number. The OMB control number is #0648–0397.

John Armor,

Director, Office of National Marine Sanctuaries, National Ocean Service, National Oceanic and Atmospheric Administration.

[FR Doc. 2020–11023 Filed 5–21–20; 8:45 am]

BILLING CODE 3510–NK–P

DEPARTMENT OF COMMERCE

National Oceanic and Atmospheric Administration

[RTID 0648–XA192]

New England Fishery Management Council; Public Meeting

AGENCY: National Marine Fisheries Service (NMFS), National Oceanic and Atmospheric Administration (NOAA), Commerce.

ACTION: Notice of public meeting.

SUMMARY: The New England Fishery Management Council (Council) is scheduling a public meeting via webinar of its Groundfish Committee to consider actions affecting New England fisheries in the exclusive economic zone (EEZ). Recommendations from this group will be brought to the full Council for formal consideration and action, if appropriate.

DATES: This webinar will be held on Wednesday, June 10, 2020 at 9:30 a.m. Webinar registration URL information: *https://attendee.gotowebinar.com/register/8118081782845428240.*

ADDRESSES: *Council address:* New England Fishery Management Council, 50 Water Street, Mill 2, Newburyport, MA 01950.

FOR FURTHER INFORMATION CONTACT: Thomas A. Nies, Executive Director, New England Fishery Management Council; telephone: (978) 465–0492.

SUPPLEMENTARY INFORMATION:

Agenda

The committee will receive a follow-up from the April Council meeting regarding the impact of the pandemic on the commercial groundfish fishery, including a discussion of the Groundfish Plan Development Team's (PDT) preliminary analysis of possible carryover options from fishing year 2019 to fishing year 2020 for sectors and the common pool. They will also receive an update on participation in the three webinar-based public hearings that occurred in April and May. The committee will receive an overview of groundfish specifications and management measures anticipated to be included in the action, which will be initiated at the June 2020 Council meeting. They will discuss an overview from the Northeast Fisheries Science Center regarding the management track assessment plans and Assessment Oversight Panel results from their May 27 meeting as well as an overview of PDT correspondence review and discussion of next steps. The committee will receive an introduction of the Executive Order on Promoting Seafood Competitiveness and Economic Growth. They will provide recommendations to the Council, as appropriate. Other business will be discussed as necessary.

Although non-emergency issues not contained in this agenda may come before this group for discussion, those issues may not be the subject of formal action during these meetings. Action will be restricted to those issues specifically listed in this notice and any issues arising after publication of this notice that require emergency action under section 305(c) of the Magnuson-Stevens Act, provided the public has been notified of the Council's intent to take final action to address the emergency.

Special Accommodations

This meeting is physically accessible to people with disabilities. Requests for sign language interpretation or other auxiliary aids should be directed to Thomas A. Nies, Executive Director, at (978) 465–0492, at least 5 days prior to the meeting date. This meeting will be recorded. Consistent with 16 U.S.C. 1852, a copy of the recording is available upon request.

Authority: 16 U.S.C. 1801 *et seq.*

Dated: May 19, 2020.

Tracey L. Thompson,

Acting Deputy Director, Office of Sustainable Fisheries, National Marine Fisheries Service.

[FR Doc. 2020–11088 Filed 5–21–20; 8:45 am]

BILLING CODE 3510–22–P

DEPARTMENT OF COMMERCE

National Oceanic and Atmospheric Administration

[RTID 0648–XA191]

New England Fishery Management Council; Public Meeting

AGENCY: National Marine Fisheries Service (NMFS), National Oceanic and Atmospheric Administration (NOAA), Commerce.

ACTION: Notice of public meeting.

SUMMARY: The New England Fishery Management Council (Council) is scheduling a public meeting via webinar of its Groundfish Advisory Panel to consider actions affecting New England fisheries in the exclusive economic zone (EEZ). Recommendations from this group will be brought to the full Council for formal consideration and action, if appropriate.

DATES: This webinar will be held on Tuesday, June 9, 2020 at 9:30 a.m. Webinar registration URL information: *https://attendee.gotowebinar.com/register/1026623209829644048.*

ADDRESSES: *Council address:* New England Fishery Management Council, 50 Water Street, Mill 2, Newburyport, MA 01950.

FOR FURTHER INFORMATION CONTACT: Thomas A. Nies, Executive Director, New England Fishery Management Council; telephone: (978) 465–0492.

SUPPLEMENTARY INFORMATION:

Agenda

The Advisory Panel will receive a follow-up from the April Council meeting regarding the impact of the pandemic on the commercial groundfish fishery, including a discussion of the Groundfish Plan Development Team's (PDT) preliminary analysis of possible carryover options from fishing year 2019 to fishing year 2020 for sectors and the common pool. The panel will receive an update on participation in the three webinar-based public hearings that occurred in April and May. They will also receive an overview of groundfish specifications and management measures anticipated to be included in the action, which will be initiated at the June 2020 Council meeting. The panel will discuss an overview from the Northeast Fisheries Science Center regarding the management track assessment plans and Assessment Oversight Panel results from their May 27 meeting as well as an overview of PDT correspondence review and discussion of next steps. The panel will give an introduction of the Executive Order on Promoting Seafood Competitiveness and Economic Growth. They will provide recommendations to the Groundfish Committee, as appropriate. Other business will be discussed as necessary.

Although non-emergency issues not contained in this agenda may come before this group for discussion, those issues may not be the subject of formal action during these meetings. Action will be restricted to those issues specifically listed in this notice and any issues arising after publication of this notice that require emergency action under section 305(c) of the Magnuson-Stevens Act, provided the public has been notified of the Council's intent to take final action to address the emergency

Special Accommodations

This meeting is physically accessible to people with disabilities. Requests for sign language interpretation or other auxiliary aids should be directed to Thomas A. Nies, Executive Director, at (978) 465–0492, at least 5 days prior to

the meeting date. This meeting will be recorded. Consistent with 16 U.S.C. 1852, a copy of the recording is available upon request.

Authority: 16 U.S.C. 1801 *et seq.*

Dated: May 19, 2020.

Tracey L. Thompson,

Acting Deputy Director, Office of Sustainable Fisheries, National Marine Fisheries Service.

[FR Doc. 2020–11091 Filed 5–21–20; 8:45 am]

BILLING CODE 3510–22–P

COMMITTEE FOR PURCHASE FROM PEOPLE WHO ARE BLIND OR SEVERELY DISABLED

Procurement List; Proposed Additions and Deletions

AGENCY: Committee for Purchase From People Who Are Blind or Severely Disabled.

ACTION: Proposed additions to and deletions from the Procurement List.

SUMMARY: The Committee is proposing to add products and services to the Procurement List that will be furnished by nonprofit agencies employing persons who are blind or have other severe disabilities, and deletes products previously furnished by such agencies.

DATES: Comments must be received on or before: June 21, 2020.

ADDRESSES: Committee for Purchase From People Who Are Blind or Severely Disabled, 1401 S Clark Street, Suite 715, Arlington, Virginia 22202–4149.

FOR FURTHER INFORMATION CONTACT: For further information or to submit comments contact: Michael R. Jurkowski, Telephone: (703) 603–2117, Fax: (703) 603–0655, or email *CMTEFedReg@AbilityOne.gov.*

SUPPLEMENTARY INFORMATION: This notice is published pursuant to 41 U.S.C. 8503(a)(2) and 41 CFR 51–2.3. Its purpose is to provide interested persons an opportunity to submit comments on the proposed actions.

Additions

If the Committee approves the proposed additions, the entities of the Federal Government identified in this notice will be required to procure the products and services listed below from nonprofit agencies employing persons who are blind or have other severe disabilities.

The following products and services are proposed for addition to the Procurement List for production by the nonprofit agencies listed:

Products

NSN(s)—Product Name(s):

MR 13031—Salad Spinner
MR 13034—Dispenser, Creamer, Plastic
MR 13035—Dispenser, Sugar, Plastic
MR 13036—Herb Keeper, Green Saver, Large, 2.8 Qt.
MR 13060—Flavor Injector, Meat and Poultry
MR 13061—Good Gravy Fat Separator, 4 Cup
MR 13062—Rack, Pressure Cooker, Silicone
MR 13063—Rack, Roasting, Silicone

Mandatory Source of Supply: Cincinnati Association for the Blind, Cincinnati, OH

Contracting Activity: Defense Commissary Agency

NSN(s)—Product Name(s):

8415–01–F05–3093—Face Covering/Mask, Universally Sized, OCP, Type I
8415–01–F05–3095—Face Covering/Mask, Universally Sized, OCP, Type II

Mandatory Source of Supply: Industries of the Blind, Inc., Greensboro, NC; ReadyOne Industries, Inc., El Paso, TX

Contracting Activity: W6QK ACC–APG NATICK

Service

Service Type: Document Management/Document Conversion

Mandatory for: Army National Guard, Temple Army Readiness Center, Arlington, VA

Mandatory Source of Supply: Columbia Lighthouse for the Blind, Washington, DC; Lighthouse for the Blind of Houston, Houston, TX

Contracting Activity: W39L USA NG READINESS CENTER

Deletions

The following products are proposed for deletion from the Procurement List:

Products

NSN(s)—Product Name(s): 2815–01–492–5709—Parts Kit, Diesel Engine Hydraulic Transmission

Mandatory Source of Supply: Georgia Industries for the Blind, Bainbridge, GA

Contracting Activity: DLA Land and Maritime, Columbus, OH

NSN(s)—Product Name(s): 7510–01–599–9349—Toner Cartridge, Laser, Double Yield, Compatible w/Lexmark T650 Series Printers

Mandatory Source of Supply: Alabama Industries for the Blind, Talladega, AL

Contracting Activity: GSA/FAS ADMIN SVCS ACQUISITION BR(2, NEW YORK, NY

Michael R. Jurkowski,

Deputy Director, Business & PL Operations.

[FR Doc. 2020–11094 Filed 5–21–20; 8:45 am]

BILLING CODE 6353–01–P

COMMITTEE FOR PURCHASE FROM PEOPLE WHO ARE BLIND OR SEVERELY DISABLED

Procurement List; Deletions

AGENCY: Committee for Purchase From People Who Are Blind or Severely Disabled.

ACTION: Deletions from the Procurement List.

SUMMARY: This action deletes products and services from the Procurement List that were furnished by nonprofit agencies employing persons who are blind or have other severe disabilities.

DATES: *Date deleted from the Procurement List:* June 21, 2020.

ADDRESSES: Committee for Purchase From People Who Are Blind or Severely Disabled, 1401 S Clark Street, Suite 715, Arlington, Virginia 22202–4149.

FOR FURTHER INFORMATION CONTACT: Michael R. Jurkowski, Telephone: (703) 603–2117, Fax: (703) 603–0655, or email *CMTEFedReg@AbilityOne.gov.*

SUPPLEMENTARY INFORMATION:

Deletions

On 4/17/2020, the Committee for Purchase From People Who Are Blind or Severely Disabled published notice of proposed deletions from the Procurement List. This notice is published pursuant to 41 U.S.C. 8503(a)(2) and 41 CFR 51–2.3.

After consideration of the relevant matter presented, the Committee has determined that the products and services listed below are no longer suitable for procurement by the Federal Government under 41 U.S.C. 8501–8506 and 41 CFR 51–2.4.

Regulatory Flexibility Act Certification

I certify that the following action will not have a significant impact on a substantial number of small entities. The major factors considered for this certification were:

1. The action will not result in additional reporting, recordkeeping or other compliance requirements for small entities.

2. The action may result in authorizing small entities to furnish the products and services to the Government.

3. There are no known regulatory alternatives which would accomplish the objectives of the Javits-Wagner-O'Day Act (41 U.S.C. 8501–8506) in connection with the products and services deleted from the Procurement List.

End of Certification

Accordingly, the following products and services are deleted from the Procurement List:

Products

NSN(s)—Product Name(s):
MR 407—Bag, Shopping Tote, Laminated, Large, ''Live Well''
MR 436—Laminated Bag, Small Holiday Fun
MR 437—Laminated Bag, Small Rein Deer
Mandatory Source of Supply: Industries for the Blind and Visually Impaired, Inc., West Allis, WI
Contracting Activity: Defense Commissary Agency

Service

Service Type: Janitorial/Custodial
Mandatory for: NISE: East Building, North Charleston, SC
Mandatory Source of Supply: Palmetto Goodwill Services, North Charleston, SC
Contracting Activity: PUBLIC BUILDINGS SERVICE, ACQUISITION DIVISION/ SERVICES BRANCH

Michael R. Jurkowski,

Deputy Director, Business & PL Operations.

[FR Doc. 2020–11095 Filed 5–21–20; 8:45 am]

BILLING CODE 6353–01–P

DEPARTMENT OF EDUCATION

[Docket No.: ED–2020–SCC–0048]

Agency Information Collection Activities; Submission to the Office of Management and Budget for Review and Approval; Comment Request; RSA–227, Annual Client Assistance Program Performance Report

AGENCY: Office of Special Education and Rehabilitative Services (OSERS), Department of Education (ED).

ACTION: Notice.

SUMMARY: In accordance with the Paperwork Reduction Act of 1995, ED is proposing an extension of an existing information collection.

DATES: Interested persons are invited to submit comments on or before June 22, 2020.

ADDRESSES: Written comments and recommendations for proposed information collection requests should be sent within 30 days of publication of this notice to *www.reginfo.gov/public/do/PRAMain.* Find this particular information collection request by selecting ''Department of Education'' under ''Currently Under Review,'' then check ''Only Show ICR for Public Comment'' checkbox.

FOR FURTHER INFORMATION CONTACT: For specific questions related to collection activities, please contact April Trice, 202–245–6074.

SUPPLEMENTARY INFORMATION: The Department of Education (ED), in accordance with the Paperwork Reduction Act of 1995 (PRA) (44 U.S.C. 3506(c)(2)(A)), provides the general public and Federal agencies with an opportunity to comment on proposed, revised, and continuing collections of information. This helps the Department assess the impact of its information collection requirements and minimize the public's reporting burden. It also helps the public understand the Department's information collection requirements and provide the requested data in the desired format. ED is soliciting comments on the proposed information collection request (ICR) that is described below. The Department of Education is especially interested in public comment addressing the following issues: (1) Is this collection necessary to the proper functions of the Department; (2) will this information be processed and used in a timely manner; (3) is the estimate of burden accurate; (4) how might the Department enhance the quality, utility, and clarity of the information to be collected; and (5) how might the Department minimize the burden of this collection on the respondents, including through the use of information technology. Please note that written comments received in response to this notice will be considered public records.

Title of Collection: RSA–227, Annual Client Assistance Program Performance Report.

OMB Control Number: 1820–0528.

Type of Review: An extension of an existing information collection.

Respondents/Affected Public: State, Local, and Tribal Governments.

Total Estimated Number of Annual Responses: 57.

Total Estimated Number of Annual Burden Hours: 912.

Abstract: The Client Assistance Program (CAP) Annual Performance Report (Form RSA–227) will be used to analyze and evaluate the CAP program administered by eligible grantees in states. CAP grantees provide information to individuals with disabilities regarding the services and benefits available under the Rehabilitation Act of 1973 (Rehabilitation Act), as amended by Title IV of the Workforce Innovation and Opportunity Act (WIOA) and the rights afforded them under Title I of the Americans with Disabilities Act. In addition, CAP grantees are authorized to provide advocacy and legal representation to individuals seeking or receiving services under the Rehabilitation Act, in order to resolve disputes with programs providing such services, including vocational rehabilitation services. RSA uses the form to meet specific data collection requirements of Section 112 of the Rehabilitation Act and its implementing Federal Regulations at 34 CFR part 370. CAP grantees must report annually using the RSA–227, which is due on or before December 30 each year.

The collection of information through Form RSA–227 has enabled RSA to furnish the President and Congress with data on the provision of client assistance services and has helped to establish a sound basis for future funding requests. Data is used to indicate trends in the provision of services from year-to-year, as well as evaluate the effectiveness of eligible grantees within individual states in meeting annual priorities and objectives.

The respondents to the RSA–227 is the client assistance program in each year. RSA received recommendations on the initial development of the RSA–227, including the frequency of reporting, from the National Disability Rights Network (NDRN), CAP programs, and other advocacy groups to ensure that the information requested could be provided with minimal burden to the respondents.

Dated: May 19, 2020.

Kate Mullan,

PRA Coordinator, Strategic Collections and Clearance Governance and Strategy Division, Office of Chief Data Officer.

[FR Doc. 2020–11080 Filed 5–21–20; 8:45 am]

BILLING CODE 4000–01–P

DEPARTMENT OF EDUCATION

Applications for New Awards; Expanding Opportunity Through Quality Charter Schools Program (CSP)——Grants to Charter School Developers for the Opening of New Charter Schools and for the Replication and Expansion of High-Quality Charter Schools (Developer Grants)

AGENCY: Office of Elementary and Secondary Education, Department of Education.

ACTION: Notice.

SUMMARY: The Department of Education (Department) is issuing a notice inviting applications for new awards for fiscal year (FY) 2020 for CSP—Developer Grants, Catalog of Federal Domestic Assistance (CFDA) numbers 84.282B (for the opening of new *charter schools*) and 84.282E (for the replication and expansion of *high-quality charter schools*). This notice relates to the

approved information collection under OMB control number 1894–0006.

DATES:

Applications Available: May 19, 2020.

Deadline for Notice of Intent to Apply: Applicants are strongly encouraged, but not required, to submit a notice of intent to apply by June 1, 2020.

Pre-Application Webinar Information: The Department will hold a pre-application meeting via webinar for prospective applicants on Tuesday, May 26, 2020 from 2:00–4:00 p.m., Eastern Time.

Deadline for Transmittal of Applications: June 19, 2020.

Deadline for Intergovernmental Review: August 18, 2020.

ADDRESSES: For the addresses for obtaining and submitting an application, please refer to our Common Instructions for Applicants to Department of Education Discretionary Grant Programs, published in the **Federal Register** on February 13, 2019 (84 FR 3768) and available at *www.govinfo.gov/content/pkg/FR-2019-02-13/pdf/2019-02206.pdf. Grants.gov* has relaxed the requirement for applicants to have an active registration in the System for Award Management (SAM) in order to apply for funding during the COVID–19 pandemic. An applicant that does not have an active SAM registration can still register with *Grants.gov*, but must contact the *Grants.gov* Support Desk, toll-free, at 1–800–518–4726, in order to take advantage of this flexibility.

FOR FURTHER INFORMATION CONTACT: Leslie Hankerson, U.S. Department of Education, 400 Maryland Avenue SW, room 3E117, Washington, DC 20202–5970. Telephone: (202) 205–8524. Email: *charterschools@ed.gov.*

If you use a telecommunications device for the deaf (TDD) or a text telephone (TTY), call the Federal Relay Service (FRS), toll free, at 1–800–877–8339.

SUPPLEMENTARY INFORMATION:

Full Text of Announcement

I. Funding Opportunity Description

Purpose of Program: The major purposes of the CSP are to expand opportunities for all students, particularly traditionally underserved students, to attend *charter schools* [1] and meet challenging State academic standards; provide financial assistance for the planning, program design, and initial implementation of public *charter schools;* increase the number of *high-quality charter schools* available to students across the United States; evaluate the impact of *charter schools* on student achievement, families, and communities; share best practices between *charter schools* and other public schools; encourage States to provide facilities support to *charter schools;* and support efforts to strengthen the charter authorizing process.

CSP—Developer Grants are intended to provide financial assistance for the planning, program design, and initial implementation of *charter schools* through awarding CSP Grants to *Charter School Developers* for the Opening of New *Charter Schools* and for the Replication and Expansion of *High-Quality Charter Schools* (also referred to as Developer Grants). The Department provides funds to *charter school developers* on a competitive basis to enable them to open new *charter schools* (CFDA number 84.282B) or *replicate* or *expand high-quality charter schools* (CFDA number 84.282E). Eligibility for a grant under this competition is limited to *charter school developers* in States that do not currently have a CSP State Entity grant (CFDA number 84.282A) under the Elementary and Secondary Education Act of 1965 (ESEA), as amended by the Every Student Succeeds Act (ESSA).[2] Eligibility in a State with a CSP State Educational Agency (SEA) grant under the ESEA, as amended by the No Child Left Behind Act of 2001 (NCLB) (CFDA number 84.282A), is limited to *charter school developers* applying for grants for the replication and expansion of *high-quality charter schools* (CFDA number 84.282E) and only if the Department has not approved an amendment to the SEA's approved grant application authorizing the SEA to make subgrants for replication and expansion. *Charter schools* that receive financial assistance through Developer Grants provide programs of elementary or secondary education, or both, and may also serve students in *early childhood education programs* or postsecondary students.

Background: This notice invites applications from eligible applicants for two types of grants: (1) Grants to *Charter School Developers* for the Opening of New *Charter Schools* (CFDA number 84.282B) and (2) Grants to *Charter School Developers* for the Replication and Expansion of *High-Quality Charter Schools* (CFDA number 84.282E). Under this competition, each CFDA number constitutes its own funding category. The Secretary intends to award grants under each CFDA number for applications that are sufficiently high quality.

All *charter schools* receiving CSP funds must meet the definition of a ''charter school'' in section 4310(2) of the ESEA, including the requirements that a *charter school* comply with non-discrimination and privacy laws, including the Age Discrimination Act of 1975, title VI of the Civil Rights Act of 1964, title IX of the Education Amendments of 1972, section 504 of the Rehabilitation Act of 1973, the Americans with Disabilities Act of 1990, section 444 of the General Education Provisions Act (GEPA), part B of the Individuals with Disabilities Education Act (IDEA) (*i.e.,* rights afforded to *children with disabilities* and their parents), and applicable State laws.

For more information on eligibility, please see section III.1 of this notice.

Priorities: This notice includes five competitive preference priorities. Competitive Preference Priorities 1, 2, 3, and 4 are from the notice of final priorities, requirements, definitions, and selection criteria (NFP) for this program published in the **Federal Register** on July 3, 2019 (84 FR 31726). Competitive Preference Priority 5 is from the notice of final priorities published in the **Federal Register** on March 9, 2020 (85 FR 13640) (Administrative Priorities).

Note: In order to receive points under these competitive preference priorities, the applicant must identify the priority or priorities that it is addressing and provide documentation that supports the identified competitive preference priority or priorities.

Competitive Preference Priorities: For FY 2020 and any subsequent year in which we make awards from the list of unfunded applications from this competition, these priorities are competitive preference priorities.

For CFDA number 84.282B, under 34 CFR 75.105(c)(2)(i), we will award an additional 7 points to an application that meets Competitive Preference Priority 1; up to an additional 7 points, depending on how well the application addresses Competitive Preference Priority 2; up to an additional 5 points to an application, depending on how well the application addresses Competitive Preference Priority 3; and an additional 3 points to an application that meets Competitive Preference Priority 5. The maximum number of competitive preference priority points an application for CFDA number 84.282B can receive under these priorities is 22.

For CFDA number 84.282E, under 34 CFR 75.105(c)(2)(i), we will award an

[1] Italicized terms are defined in the Definitions section of this notice.

[2] All references to the ESEA in this notice are to the ESEA, as amended by the ESSA, unless otherwise noted.

additional 7 points to an application that meets Competitive Preference Priority 1; up to an additional 7 points, depending on how well the application addresses Competitive Preference Priority 2; up to an additional 5 points to an application, depending on how well the application addresses Competitive Preference Priority 3; and an additional 3 points to an application that meets Competitive Preference Priority 4. The maximum number of competitive preference priority points an application for CFDA number 84.282E can receive under these priorities is 22.

These priorities are:

Competitive Preference Priority 1—Rural Community. (0 or 7 points under CFDA numbers 84.282B and 84.282E).

Under this priority, applicants must propose to open a new *charter school* or to *replicate* or expand a *high-quality charter school* in a *rural community.*

Competitive Preference Priority 2—Spurring Investment in Opportunity Zones.

Under this priority, an applicant must address one or both of the following priority areas:

(a) Proposes to open a new *charter school* or to *replicate* or *expand* a *high-quality charter school* in a qualified opportunity zone as designated by the Secretary of the Treasury under section 1400Z–1 of the Internal Revenue Code, as amended by the Tax Cuts and Jobs Act (Pub. L. 115–97). (0 or 3 points under CFDA numbers 84.282B and 84.282E)

In addressing paragraph (a) of this priority, an applicant must provide the census tract number of the qualified opportunity zone in which it proposes to open a new *charter school* or *replicate* or *expand* a *high-quality charter school.* A list of qualified opportunity zones, with census tract numbers, is available at *www.cdfifund.gov/Pages/Opportunity-Zones.aspx.*

Note: Applicants may also determine whether a particular area is part of a qualified opportunity zone using the National Center of Education Statistics' map located at *https://nces.ed.gov/programs/maped/LocaleLookup/.*

(b) Provide evidence in its application that it has received or will receive an investment from a qualified opportunity fund under section 1400Z–2 of the Internal Revenue Code, as amended by the Tax Cuts and Jobs Act, for one or more of the following, as needed to open or to *replicate* or *expand* the school:

(1) The acquisition (by purchase, lease, donation, or otherwise) of an interest (including an interest held by a third party for the benefit of the school) in improved or unimproved real property;

(2) The construction of new facilities, or the renovation, repair, or alteration of existing facilities;

(3) The predevelopment costs required to assess sites for purposes of subparagraph (1) or (2); and

(4) The acquisition of other tangible property.

In addressing paragraph (b) of this priority, an applicant must identify the qualified opportunity fund from which it has received or will receive financial assistance. (0 or 4 points under CFDA numbers 84.282B and 84.282E)

Competitive Preference Priority 3—Opening a New Charter School or Replicating or Expanding a High-quality Charter School to Serve Native American Students. (Up to 5 points under CFDA numbers 84.282B and 84.282E)

Under this priority, applicants must—

(a) Propose to open a new *charter school,* or *replicate* or *expand* a *high-quality charter school,* that—

(1) Utilizes targeted outreach and recruitment in order to serve a *high proportion* of *Native American* students, consistent with nondiscrimination requirements contained in the U.S. Constitution and Federal civil rights laws;

(2) Has a mission and focus that will address the unique educational needs of *Native American* students, such as through the use of instructional programs and teaching methods that reflect and preserve *Native American language,* culture, and history; and

(3) Has or will have a governing board with a substantial percentage of members who are members of *Indian Tribes* or *Native American organizations* located within the area to be served by the new, *replicated,* or *expanded charter school;*

(b) Submit a letter of support from at least one *Indian Tribe* or *Native American organization* located within the area to be served by the new, *replicated,* or *expanded charter school;* and

(c) Meaningfully collaborate with the *Indian Tribe(s)* or *Native American organization(s)* from which the applicant has received a letter of support in a timely, active, and ongoing manner with respect to the development and implementation of the educational program at the *charter school.*

Competitive Preference Priority 4—Single School Operators. (0 or 3 points under CFDA number 84.282E)

Under this priority, applicants must provide evidence that the applicant currently operates one, and only one, *charter school.*

Competitive Preference Priority 5—Applications from New Potential Grantees. (0 or 3 points under CFDA number 84.282B)

Under this priority, an applicant must demonstrate that it has never received a grant, including through membership in a group application submitted in accordance with 34 CFR 75.127–75.129, under the program from which it seeks funds.

Definitions:

The following definitions are from sections 4310 and 8101 of the ESEA, section 602 of the IDEA, 34 CFR 77.1, and the NFP.

Ambitious means promoting continued, meaningful improvement for program participants or for other individuals or entities affected by the grant or representing a significant advancement in the field of education research, practices, or methodologies. When used to describe a *performance target,* whether a *performance target* is *ambitious* depends upon the context of the relevant *performance measure* and the *baseline* for that measure. (34 CFR 77.1)

Authorized public chartering agency means a State educational agency, local educational agency, or other public entity that has the authority pursuant to State law and approved by the Secretary to authorize or approve a *charter school.* (Section 4310(1) of the ESEA)

Baseline means the starting point from which performance is measured and targets are set. (34 CFR 77.1)

Charter management organization means a nonprofit organization that operates or manages a network of *charter schools* linked by centralized support, operations, and oversight. (Section 4310(3) of the ESEA)

Charter school means a public school that—

(a) In accordance with a specific State statute authorizing the granting of charters to schools, is exempt from significant State or local rules that inhibit the flexible operation and management of public schools, but not from any rules relating to the other requirements of this definition;

(b) Is created by a *developer* as a public school, or is adapted by a *developer* from an existing public school, and is operated under public supervision and direction;

(c) Operates in pursuit of a specific set of educational objectives determined by the school's *developer* and agreed to by the *authorized public chartering agency;*

(d) Provides a program of elementary or secondary education, or both;

(e) Is nonsectarian in its programs, admissions policies, employment practices, and all other operations, and is not affiliated with a sectarian school or religious institution;

(f) Does not charge tuition;

(g) Complies with the Age Discrimination Act of 1975, title VI of the Civil Rights Act of 1964, title IX of the Education Amendments of 1972, section 504 of the Rehabilitation Act of 1973, the Americans with Disabilities Act of 1990 (42 U.S.C. 12101 *et seq.*), section 444 of GEPA (20 U.S.C. 1232g) (commonly referred to as the ''Family Educational Rights and Privacy Act of 1974''), and part B of the IDEA;

(h) Is a school to which parents choose to send their children, and that—

(1) Admits students on the basis of a lottery, consistent with section 4303(c)(3)(A) of the ESEA, if more students apply for admission than can be accommodated; or

(2) In the case of a school that has an affiliated *charter school* (such as a school that is part of the same network of schools), automatically enrolls students who are enrolled in the immediate prior grade level of the affiliated charter school and, for any additional student openings or student openings created through regular attrition in student enrollment in the affiliated charter school and the enrolling school, admits students on the basis of a lottery as described in clause (1);

(i) Agrees to comply with the same Federal and State audit requirements as do other elementary schools and secondary schools in the State, unless such State audit requirements are waived by the State;

(j) Meets all applicable Federal, State, and local health and safety requirements;

(k) Operates in accordance with State law;

(l) Has a written performance contract with the *authorized public chartering agency* in the State that includes a description of how student performance will be measured in *charter schools* pursuant to State assessments that are required of other schools and pursuant to any other assessments mutually agreeable to the *authorized public chartering* agency and the *charter school;* and

(m) May serve students in early childhood education programs or postsecondary students. (Section 4310(2) of the ESEA)

Child with a disability means—

(a) In general—

The term ''child with a disability'' means a child—

(i) With intellectual disabilities, hearing impairments (including deafness), speech or language impairments, visual impairments (including blindness), serious emotional disturbance (referred to in this title as ''emotional disturbance''), orthopedic impairments, autism, traumatic brain injury, other health impairments, or specific learning disabilities; and

(ii) Who, by reason thereof, needs special education and related services.

(b) Child aged 3 through 9—The term ''child with a disability'' for a child aged 3 through 9 (or any subset of that age range, including ages 3 through 5), may, at the discretion of the State and the local educational agency, include a child—

(i) Experiencing developmental delays, as defined by the State and as measured by appropriate diagnostic instruments and procedures, in 1 or more of the following areas: physical development; cognitive development; communication development; social or emotional development; or adaptive development; and

(ii) Who, by reason thereof, needs special education and related services. (Section 8101(4) of the ESEA and section 602 of the IDEA)

Demonstrates a rationale means a key *project component* included in the project's *logic model* is informed by research or evaluation findings that suggest the *project component* is likely to improve *relevant outcomes.* (34 CFR 77.1)

Developer means an individual or group of individuals (including a public or private nonprofit organization), which may include teachers, administrators and other school staff, parents, or other members of the local community in which a *charter school* project will be carried out. (Section 4310(5) of the ESEA)

Educationally disadvantaged student means a student in one or more of the categories described in section 1115(c)(2) of the ESEA, which include children who are economically disadvantaged, *children with disabilities,* migrant students, *English learners,* neglected or delinquent students, homeless students, and students who are in foster care. (NFP)

English learner, when used with respect to an individual, means an individual—

(a) Who is aged 3 through 21;

(b) Who is enrolled or preparing to enroll in an elementary school or secondary school;

(c)(1) Who was not born in the United States or whose native language is a language other than English;

(2)(i) Who is a Native American or Alaska Native, or a native resident of the outlying areas; and

(ii) Who comes from an environment where a language other than English has had a significant impact on the individual's level of English language proficiency; or

(3) Who is migratory, whose native language is a language other than English, and who comes from an environment where a language other than English is dominant; and

(d) Whose difficulties in speaking, reading, writing, or understanding the English language may be sufficient to deny the individual—

(1) The ability to meet the challenging State academic standards;

(2) The ability to successfully achieve in classrooms where the language of instruction is English; or

(3) The opportunity to participate fully in society. (Section 8101(20) of the ESEA)

Expand, when used with respect to a *high-quality charter school,* means to significantly increase enrollment or add one or more grades to the *high-quality charter school.* (Section 4310(7) of the ESEA)

High proportion, when used to refer to *Native American* students, means a fact-specific, case-by-case determination based upon the unique circumstances of a particular *charter school* or proposed *charter school.* The Secretary considers ''high proportion'' to include a majority of *Native American* students. In addition, the Secretary may determine that less than a majority of *Native American* students constitutes a ''high proportion'' based on the unique circumstances of a particular *charter school* or proposed *charter school,* as described in the application for funds. (NFP)

High-quality charter school means a *charter school* that—

(a) Shows evidence of strong academic results, which may include strong student academic growth, as determined by a State;

(b) Has no significant issues in the areas of student safety, financial and operational management, or statutory or regulatory compliance;

(c) Has demonstrated success in significantly increasing student academic achievement, including graduation rates where applicable, for all students served by the *charter school;* and

(d) Has demonstrated success in increasing student academic achievement, including graduation rates where applicable, for each of the subgroups of students, as defined in section 1111(c)(2) of the ESEA, except

that such demonstration is not required in a case in which the number of students in a group is insufficient to yield statistically reliable information or the results would reveal personally identifiable information about an individual student. (Section 4310(8) of the ESEA)

Indian Tribe means a federally recognized or a State-recognized Tribe. (NFP)

Institution of higher education means an educational institution in any State that—

(a) Admits as regular students only persons having a certificate of graduation from a school providing secondary education, or the recognized equivalent of such a certificate, or persons who meet the requirements of section 484(d) of the HEA;

(b) Is legally authorized within such State to provide a program of education beyond secondary education;

(c) Provides an educational program for which the institution awards a bachelor's degree or provides not less than a 2-year program that is acceptable for full credit toward such a degree, or awards a degree that is acceptable for admission to a graduate or professional degree program, subject to review and approval by the Secretary;

(d) Is a public or other nonprofit institution; and

(e) Is accredited by a nationally recognized accrediting agency or association, or if not so accredited, is an institution that has been granted pre-accreditation status by such an agency or association that has been recognized by the Secretary for the granting of pre-accreditation status, and the Secretary has determined that there is satisfactory assurance that the institution will meet the accreditation standards of such an agency or association within a reasonable time. (NFP)

Logic model (also referred to as theory of action) means a framework that identifies key project components of the proposed project (*i.e.,* the active ''ingredients'' that are hypothesized to be critical to achieving the relevant outcomes) and describes the theoretical and operational relationships among the key project components and relevant outcomes. (34 CFR 77.1)

Native American means an Indian (including an Alaska Native), as defined in section 6132(b)(2) of the ESEA, Native Hawaiian, or Native American Pacific Islander. (NFP)

Native American language means the historical, traditional languages spoken by *Native Americans.* (NFP)

Native American organization means an organization that—

(a) Is legally established—

(1) By Tribal or inter-Tribal charter or in accordance with State or Tribal law; and

(2) With appropriate constitution, by-laws, or articles of incorporation;

(b) Includes in its purposes the promotion of the education of *Native Americans;*

(c) Is controlled by a governing board, the majority of which is *Native American;*

(d) If located on an Indian reservation, operates with the sanction or by charter of the governing body of that reservation;

(e) Is neither an organization or subdivision of, nor under the direct control of, any *institution of higher education;* and

(f) Is not an agency of State or local government. (NFP)

Performance measure means any quantitative indicator, statistic, or metric used to gauge program or project performance. (34 CFR 77.1)

Performance target means a level of performance that an applicant would seek to meet during the course of a project or as a result of a project. (34 CFR 77.1)

Project component means an activity, strategy, intervention, process, product, practice, or policy included in a project. Evidence may pertain to an individual *project component* (*e.g.,* training teachers or instructional practices for English learners and follow-on coaching for these teachers). (34 CFR 77.1)

Relevant outcome means the student outcome(s) or other outcome(s) the key *project component* is designed to improve, consistent with the specific goals of the program. (34 CFR 77.1)

Replicate, when used with respect to a *high-quality charter school,* means to open a new *charter school,* or a new campus of a *high-quality charter school,* based on the educational model of an existing *high-quality charter school,* under an existing charter or an additional charter, if permitted or required by State law. (Section 4310(9) of the ESEA)

Rural community is a community served by one or more local educational agencies (LEAs) (a) with a locale code of 32, 33, 41, 42, or 43; or (b) that include a majority of schools with a locale code of 32, 33, 41, 42, or 43. Applicants are encouraged to retrieve locale codes from the National Center for Education Statistics School District search tool (*https://nces.ed.gov/ccd/districtsearch/*), where LEAs can be looked up individually to retrieve locale codes, and Public School search tool (*https://nces.ed.gov/ccd/schoolsearch/*), where individual schools can be looked up to retrieve locale codes. (NFP)

Application Requirements:

Applications for CSP Developer Grant funds must address the following application requirements. These requirements are from the NFP and section 4303(f) [3] of the ESEA. The source of each requirement is provided in parentheses following each requirement. Except as otherwise provided, an applicant may choose to respond to each requirement separately or in the context of the applicant's responses to the selection criteria in section V.1 of this notice.

Grants to Charter School Developers for the Opening of New Charter Schools (CFDA number 84.282B) and for the Replication and Expansion of High-Quality Charter Schools (CFDA number 84.282E).

Applicants for grants under CFDA number 84.282B or 84.282E must address the following application requirements. An applicant must respond to the requirements in paragraph (a) in a stand-alone section of the application or in an appendix.

(a) Describe the eligible applicant's objectives in running a quality *charter school* program and how the program will be carried out, including—

(1) How the eligible applicant will ensure that *charter schools* receiving funds under this program meet the educational needs of their students, including *children with disabilities* and *English learners* (Section 4303(f)(1)(A)(x) of the ESEA);

(2) The roles and responsibilities of eligible applicants, partner organizations, and *charter management organizations,* including the administrative and contractual roles and responsibilities of such partners (Section 4303(f)(1)(C)(i)(I) of the ESEA);

(3) The quality controls agreed to between the eligible applicant and the *authorized public chartering agency* involved, such as a contract or performance agreement, how a school's performance in the State's accountability system and impact on student achievement (which may include student academic growth) will be one of the most important factors for renewal or revocation of the school's charter, and how the *authorized public chartering agency* involved will reserve the right to revoke or not renew a school's charter based on financial,

[3] Under section 4305(c) of the ESEA, Developer Grants must have the same terms and conditions as grants awarded to State entities under section 4303. For clarity, with respect to requirements that derive from section 4303 the Department has, as applicable, omitted the term ''State entity'' or replaced it with ''eligible applicant.'' In addition, the Department has replaced ''State entity's program'' and ''subgrant,'' respectively, with ''program'' and ''grant.''

structural, or operational factors involving the management of the school (Section 4303(f)(1)(C)(i)(II) of the ESEA);

(4) How the autonomy and flexibility granted to a *charter school* is consistent with the definition of a *charter school* in section 4310 of the ESEA (Section 4303(f)(1)(C)(i)(III) of the ESEA);

(5) How the eligible applicant will solicit and consider input from parents and other members of the community on the implementation and operation of each *charter school* that will receive funds under the grant (Section 4303(f)(1)(C)(i)(IV) of the ESEA);

(6) The eligible applicant's planned activities and expenditures of grant funds to support the activities described in section 4303(b)(1) of the ESEA, and how the eligible applicant will maintain financial sustainability after the end of the grant period (Section 4303(f)(1)(C)(i)(V) of the ESEA);

(7) How the eligible applicant will support the use of effective parent, family, and community engagement strategies to operate each *charter school* that will receive funds under the grant (Section 4303(f)(1)(C)(i)(VI) of the ESEA); and

(8) How the eligible applicant will ensure that each *charter school* receiving funds under this program has considered and planned for the transportation needs of the school's students (Section 4303(f)(1)(E) of the ESEA).

(b) Describe the educational program that the applicant will implement in the *charter school* receiving funding under this program, including—

(1) Information on how the program will enable all students to meet the challenging State academic standards;

(2) The grade levels or ages of students who will be served; and

(3) The instructional practices that will be used. (NFP)

(c) Describe how the applicant will ensure that the *charter school* that will receive funds will recruit, enroll, and retain students, including *educationally disadvantaged students,* which include *children with disabilities* and *English learners.* (NFP)

(d) Describe the lottery and enrollment procedures that the applicant will use for the *charter school* if more students apply for admission than can be accommodated and, if the applicant proposes to use a weighted lottery, how the weighted lottery complies with section 4303(c)(3)(A) of the ESEA. (NFP)

(e) Provide a complete *logic model* (as defined in 34 CFR 77.1) for the grant project. The *logic model* must include the applicant's objectives for implementing a new *charter school* or replicating or expanding a *high-quality charter school* with funding under this competition. (NFP)

(f) Provide a budget narrative, aligned with the activities, target grant project outputs, and outcomes described in the *logic model,* that outlines how grant funds will be expended to carry out planned activities. (NFP)

(g) If the applicant proposes to open a new *charter school* (CFDA number 84.282B) or proposes to *replicate* or *expand* a high-quality *charter school* (CFDA number 84.282E) that provides a single-sex educational program, demonstrate that the proposed single-sex educational programs are in compliance with the title IX of the Education Amendments of 1972 (20 U.S.C. 1681, *et seq.*) (''Title IX'') and its implementing regulations, including 34 CFR 106.34. (NFP)

(h) Provide the applicant's most recent available independently audited financial statements prepared in accordance with generally accepted accounting principles. (NFP)

(i) Provide—

(1) A request and justification for waivers of any Federal statutory or regulatory provisions that the eligible entity believes are necessary for the successful operation of the *charter school* to be opened or to be *replicated* or *expanded;* and

(2) A description of any State or local rules, generally applicable to public schools, that will be waived or otherwise not apply to the school that will receive funds. (NFP)

(j) Describe how each school that will receive funds meets the definition of *charter school* under section 4310(2) of the ESEA. (NFP)

Grants for the Replication and Expansion of High-Quality Charter Schools (CFDA number 84.282E).

In addition to the preceding application requirements, applicants for grants under CFDA number 84.282E must—

(a) For each *charter school* currently operated or managed by the applicant, provide—

(1) Information that demonstrates that the school is treated as a separate school by its *authorized public chartering agency* and the State, including for purposes of accountability and reporting under title I, part A of the ESEA;

(2) Student assessment results for all students and for each subgroup of students described in section 1111(c)(2) of the ESEA;

(3) Attendance and student retention rates for the most recently completed school year and, if applicable, the most recent available four-year adjusted cohort graduation rates and extended-year adjusted cohort graduation rates; and

(4) Information on any significant compliance and management issues encountered within the last three school years by the existing charter school being operated or managed by the eligible entity, including in the areas of student safety and finance. (NFP)

Assurances:

Applicants for CSP Developer Grants must provide the following assurances. These assurances are from section 4303(f) of the ESEA. The source of each assurance is provided in parentheses following each assurance.

Applicants for funds under this program must provide assurances that—

(a) Each *charter school* receiving funds through this program will have a high degree of autonomy over budget and operations, including autonomy over personnel decisions (Section 4303(f)(2)(A) of the ESEA);

(b) The eligible applicant will support *charter schools* in meeting the educational needs of their students, as described in section 4303(f)(1)(A)(x) of the ESEA (Section 4303(f)(2)(B) of the ESEA); and

(c) The eligible applicant will ensure that each *charter school* receiving funds under this program makes publicly available, consistent with the dissemination requirements of the annual State report card under section 1111(h) of the ESEA, including on the website of the school, information to help parents make informed decisions about the education options available to their children, including—

(i) Information on the educational program;

(ii) Student support services;

(iii) Parent contract requirements (as applicable), including any financial obligations or fees;

(iv) Enrollment criteria (as applicable); and

(v) Annual performance and enrollment data for each of the subgroups of students, as defined in section 1111(c)(2) of the ESEA, except that such disaggregation of performance and enrollment data shall not be required in a case in which the number of students in a group is insufficient to yield statically reliable information or the results would reveal personally identifiable information about an individual student. (Section 4303(f)(2)(G) of the ESEA)

Program Authority: Title IV, part C of the ESEA, as amended.

Applicable Regulations: (a) The Education Department General Administrative Regulations in 34 CFR parts 75, 76, 77, 79, 81, 82, 84, 86, 97, 98, and 99. (b) The Office of

Management and Budget Guidelines to Agencies on Governmentwide Debarment and Suspension (Nonprocurement) in 2 CFR part 180, as adopted and amended as regulations of the Department in 2 CFR part 3485. (c) The Uniform Administrative Requirements, Cost Principles, and Audit Requirements for Federal Awards in 2 CFR part 200, as adopted and amended as regulations of the Department in 2 CFR part 3474. (d) The NFP. (e) The Administrative Priorities.

Note: The regulations in 34 CFR part 79 apply to all applicants except federally recognized Indian Tribes.

II. Award Information

Type of Award: Discretionary grants.

Estimated Available Funds: $7,500,000.

Contingent upon the availability of funds and the quality of applications, we may make additional awards in subsequent years from the list of unfunded applications from this competition.

Estimated Range of Awards: $150,000—$300,000 per year.

Estimated Average Size of Awards: $225,000 per year.

Maximum Award: See *Reasonable and Necessary Costs* in section III.4. for information regarding the maximum amount of funds that may be awarded per new school seat and per new school.

Estimated Number of Awards: 12–25.

Note: The Department is not bound by any estimates in this notice. The estimated range and average size of awards are based on a single 12-month budget period. We may use available funds to support multiple 12-month budget periods for one or more grantees.

Project Period: Up to 60 months.

III. Eligibility Information

1. *Eligible Applicants:*

Eligible applicants are *developers* that have—

(a) Applied to an *authorized public chartering authority* to operate a *charter school;* and

(b) Provided adequate and timely notice to that authority. (Section 4310(6) of the ESEA).

Additionally, the *charter school* must be located in a State with a State statute specifically authorizing the establishment of *charter schools* (as defined in section 4310(2) of the ESEA) and in which a State entity currently does not have a CSP State Entity grant (CFDA number 84.282A) under section 4303 of the ESEA.[4] (Section 4305(a)(2) of the ESEA) Eligibility in a State with a CSP SEA grant (CFDA 84.282A) under the ESEA, as amended by NCLB, is limited to grants for replication and expansion[5] (CFDA 84.282E) and only if the Department has not approved an amendment to the SEA's approved grant application authorizing the SEA to make subgrants for replication and expansion.[6]

As a general matter, the Secretary considers *charter schools* that have been in operation for more than five years to be past the initial implementation phase and, therefore, ineligible to receive CSP funds under CFDA number 84.282B to support the opening of a new *charter school* or under CFDA number 84.282E for the replication of a *high-quality charter school;* however, such schools may receive CSP funds under CFDA number 84.282E for the expansion of a *high-quality charter school.*

Note: If an applicant has applied to an *authorized public chartering agency* to operate a new school and has not yet been approved, it must include in its application, a dated copy of its application to the *authorized public chartering agency,* and information addressing the plan and timeline to receive notification from the authorizer on the final decision. Additionally, an applicant should delineate any costs in its proposed budget that are projected to be incurred prior to the date the applicant's *charter school* application is approved by the *authorized public chartering agency.*

2. *Cost Sharing or Matching:* This program does not require cost sharing or matching.

3. *Subgrantees:* A grantee under this competition may not award subgrants to entities to directly carry out project activities described in its application.

4. *Reasonable and Necessary Costs:* The Secretary may elect to impose maximum limits on the amount of grant funds that may be awarded for a new *charter school,* or *replicated,* or *expanded, high-quality charter school.*

For this competition, the maximum limit of grant funds that may be awarded for a new, *replicated,* or *expanded charter school* is $1,500,000.

In accordance with 2 CFR 200.404, applicants must ensure that all costs included in the proposed budget are reasonable and necessary in light of the goals and objectives of the proposed project. Any costs determined by the Secretary to be unreasonable or unnecessary will be removed from the final approved budget.

A *charter school* that previously has received CSP funds for replication or expansion or for planning or initial implementation of a *charter school* under CFDA number 84.282A or 84.282M (under the ESEA) may not use funds under this grant for the same purpose. However, such *charter school* may be eligible to receive funds under this competition to *expand* the *charter school* beyond the existing grade levels or student count and beyond the grade levels or projected student count provided in the previous CSP award. Likewise, a *charter school* that receives funds under this competition is ineligible to receive funds for the same purpose under section 4303(b)(1) or 4305(b) of the ESEA, including opening and preparing for the operation of a new *charter school,* opening and preparing for the operation of a *replicated high-quality charter school,* or expanding a *high-quality charter school* (*i.e.,* CFDA number 84.282A or 84.282M).

IV. Application and Submission Information

1. *Application Submission Instructions:* Applicants are required to follow the Common Instructions for Applicants to Department of Education Discretionary Grant Programs, published in the **Federal Register** on February 13, 2019 (84 FR 3768) and available at *www.govinfo.gov/content/pkg/FR-2019-02-13/pdf/2019-02206.pdf,* which contain requirements and information on how to submit an application. *Grants.gov* has relaxed the requirement for applicants to have an active registration in SAM in order to apply for funding during the COVID–19 pandemic. An applicant that does not have an active SAM registration can still register with *Grants.gov*, but must contact the *Grants.gov* Support Desk, toll-free, at 1–800–518–4726, in order to take advantage of this flexibility.

[4] States in which a State entity currently has an approved CSP State Entity grant application under section 4303 of the ESEA that is actively running subgrant competitions are Alabama, Arizona, Arkansas, Colorado, Delaware, Idaho, Indiana, Maryland, Michigan, Minnesota, Mississippi, New Hampshire, New Mexico, New York, North Carolina, Oklahoma, Rhode Island, Texas, Washington, and Wisconsin. We will not consider applications from applicants in these States under either CFDA 84.282B or 84.282E.

[5] States in which the SEA currently has an approved CSP SEA grant application under the ESEA, as amended by NCLB (*i.e.,* a grant award made in fiscal year 2016 or earlier), are California, District of Columbia, Florida, Georgia, Louisiana, Massachusetts, Nevada, Ohio, South Carolina, and Tennessee. We will not consider applications from applicants in these States for grants for the opening of new *charter schools* submitted under CFDA number 84.282B.

[6] States in which the SEA currently has an approved CSP SEA grant application under the ESEA, as amended by NCLB (*i.e.,* a grant award made in fiscal year 2016 or earlier), and have approved amendment requests that authorize the SEA to make subgrants for replication and expansion, are California, District of Columbia, Massachusetts, Nevada, and Ohio. We will not consider applications from applicants in these States for grants for the replication or expansion of *high-quality charter schools* under CFDA 84.282E either.

2. *Submission of Proprietary Information:* Given the types of projects that may be proposed in applications for this competition, your application may include business information that you consider proprietary.

In 34 CFR 5.11 we define ''business information'' and describe the process we use in determining whether any of that information is proprietary and, thus, protected from disclosure under Exemption 4 of the Freedom of Information Act (5 U.S.C. 552, as amended).

Because we plan to make successful applications available to the public, you may wish to request confidentiality of business information.

Consistent with Executive Order 12600, please designate in your application any information that you believe is exempt from disclosure under Exemption 4. In the appropriate Appendix section of your application, under ''Other Attachments Form,'' please list the page number or numbers on which we can find this information. For additional information please see 34 CFR 5.11(c).

3. *Intergovernmental Review:* This competition is subject to Executive Order 12372 and the regulations in 34 CFR part 79. Information about Intergovernmental Review of Federal Programs under Executive Order 12372 is in the application package for this program.

4. *Funding Restrictions:* Grantees must use the grant funds to open and prepare for the operation of a new *charter school;* to open and prepare for the operation of a *replicated high-quality charter school;* or to *expand* a *high-quality charter school,* as applicable. Grant funds must be used to carry out allowable activities, described in section 4303(h) of the ESEA, which include the following:

(a) Preparing teachers, school leaders, and specialized instructional support personnel, including through paying the costs associated with—

(1) Providing professional development; and

(2) Hiring and compensating, during the eligible applicant's planning period specified in the application for funds, one or more of the following:

(i) Teachers.

(ii) School leaders.

(iii) Specialized instructional support personnel.

(b) Acquiring supplies, training, equipment (including technology), and educational materials (including developing and acquiring instructional materials).

(c) Carrying out necessary renovations to ensure that a new school building complies with applicable statutes and regulations, and minor facilities repairs (excluding construction).

(d) Providing one-time, startup costs associated with providing transportation to students to and from the charter school.

(e) Carrying out community engagement activities, which may include paying the cost of student and staff recruitment.

(f) Providing for other appropriate, non-sustained costs related to the opening of new *charter schools,* or the replication or expansion of *high-quality charter schools,* as applicable, when such costs cannot be met from other sources.

A grant awarded by the Secretary under this competition may be for a period of not more than five years, of which the grantee may use not more than 18 months for planning and program design. (Section 4303(d)(1)(B) of the ESEA). Applicants may propose to support only one *charter school* per grant application.

We reference additional regulations outlining funding restrictions in the *Applicable Regulations* section of this notice.

5. *Recommended Page Limit:* The application narrative (Part III of the application) is where you, the applicant, address the selection criteria that reviewers use to evaluate your application. We recommend that you (1) limit the narrative to no more than 50 pages, and (2) use the following standards:

- A ''page'' is 8.5″ x 11″, on one side only, with 1″ margins at the top, bottom, and both sides.
- Double space (no more than three lines per vertical inch) all text in the application narrative, including titles, headings, footnotes, quotations, references, and captions, as well as all text in charts, tables, figures, and graphs.
- Use a font that is either 12 point or larger or no smaller than 10 pitch (characters per inch).
- Use one of the following fonts: Times New Roman, Courier, Courier New, or Arial.

The recommended page limit does not apply to Part I, the cover sheet; Part II, the budget section, including the narrative budget justification; Part IV, the assurances and certifications; or the one-page abstract, the resumes, the bibliography, or the letters of support. However, the recommended page limit does apply to all of the application narrative.

6. *Notice of Intent to Apply:* The Department will be able to develop a more efficient process for reviewing grant applications if it has a better understanding of the number of entities that intend to apply for funding under this competition. Therefore, we strongly encourage each potential applicant to notify us of their intent to submit an application for funding by sending an email to *charterschools@ed.gov* with FY 2020 CSP Developer Intent to Apply in the subject line, by June 1, 2020. Applicants that do not send a notice of intent to apply may still apply for funding.

V. Application Review Information

1. *Selection Criteria.* The selection criteria for applicants submitting applications under CFDA numbers 84.282B and 84.282E are listed in paragraphs (a) and (b) of this section, respectively. These selection criteria are from the NFP and 34 CFR 75.210. The maximum possible score for addressing all of the criteria in each section is 100 points. The maximum possible score for addressing each criterion is indicated in parentheses following the criterion.

In evaluating an application for a Developer Grant, the Secretary considers the following criteria:

(a) *Selection Criteria for Grants for the Opening of New Charter Schools (CFDA number 84.282B).*

(1) *Quality of the management plan (up to 30 points).*

The Secretary considers the quality of the management plan for the proposed project. In determining the quality of the management plan for the proposed project, the Secretary considers the following factors:

(i) The adequacy of the management plan to achieve the objectives of the proposed project on time and within budget, including clearly defined responsibilities, timelines, and milestones for accomplishing project tasks (up to 15 points). (34 CFR 75.210(g)(2)(i))

(ii) The extent to which the time commitments of the project director and principal investigator and other key project personnel are appropriate and adequate to meet the objectives of the proposed project (up to 10 points). (34 CFR 75.210(g)(2)(iv))

(iii) How the applicant will ensure that a diversity of perspectives are brought to bear in the operation of the proposed project, including those of parents, teachers, the business community, a variety of disciplinary and professional fields, recipients or beneficiaries of services, or others, as appropriate (up to 5 points). (34 CFR 75.210(g)(2)(v))

(2) *Quality of the continuation plan (up to 10 points).*

In determining the quality of the continuation plan, the Secretary considers the extent to which the eligible applicant is prepared to continue to operate the *charter school* that would receive grant funds in a manner consistent with the eligible applicant's application once the grant funds under this program are no longer available. (NFP)

(3) *Significance of contribution in assisting educationally disadvantaged students (up to 20 points).*

In determining the significance of the contribution the proposed project will make in *expanding* educational opportunity for *educationally disadvantaged students* and enabling those students to meet challenging State academic standards, the Secretary considers the quality of the plan to ensure that the *charter school* the applicant proposes to open, *replicate,* or *expand* will recruit, enroll, and effectively serve *educationally disadvantaged students,* which include *children with disabilities* and English learners. (NFP)

(4) *Quality of the project design (up to 25 points).*

The Secretary considers the quality of the design of the proposed project. In determining the quality of the design of the proposed project, the Secretary considers the following factors:

(i) The extent to which the proposed project *demonstrates a rationale* (as defined in 34 CFR 77.1(c)) (up to 10 points). (34 CFR 75.210(c)(2)(xxix))

(ii) The extent to which the goals, objectives, and outcomes to be achieved by the proposed project are clearly specified and measurable (up to 10 points). (34 CFR 75.210(c)(2)(i))

(iii) The extent to which the design for implementing and evaluating the proposed project will result in information to guide possible replication of project activities or strategies, including information about the effectiveness of the approach or strategies employed by the project (up to 5 points). (34 CFR 75.210(c)(2)(x))

(5) *Quality of the project personnel (up to 15 points).*

The Secretary considers the quality of the personnel who will carry out the proposed project.

(i) In determining the quality of project personnel, the Secretary considers the extent to which the applicant encourages applications for employment from persons who are members of groups that have traditionally been underrepresented based on race, color, national origin, gender, age, or disability (up to 5 points). (34 CFR 75.210(e)(2))

(ii) In addition, the Secretary considers the qualifications, including relevant training and experience, of key project personnel (up to 10 points). (34 CFR 75.210(e)(3)(ii))

(b) *Selection Criteria for Replication and Expansion Grants (CFDA number 84.282E).*

(1) *Quality of the eligible applicant (up to 30 points).*

In determining the quality of the eligible applicant, the Secretary considers the following factors:

(i) The extent to which the academic achievement results (including annual student performance on statewide assessments and annual student attendance and retention rates and where applicable and available, student academic growth, high school graduation rates, postsecondary enrollment and persistence rates, including in college or career training programs, employment rates, earnings and other academic outcomes) for *educationally disadvantaged students* served by the *charter schools* operated or managed by the applicant have exceeded the average academic achievement results for such students served by other public schools in the State (up to 10 points). (NFP)

(ii) The extent to which one or more *charter schools* operated or managed by the applicant have closed; have had a charter revoked due to noncompliance with statutory or regulatory requirements; or have had their affiliation with the applicant revoked or terminated, including through voluntary disaffiliation (up to 10 points). (NFP)

(iii) The extent to which one or more *charter schools* operated or managed by the applicant have had any significant issues in the area of financial or operational management or student safety, or have otherwise experienced significant problems with statutory or regulatory compliance that could lead to revocation of the school's charter (up to 5 points). (NFP)

(iv) The extent to which the schools operated or managed by the applicant demonstrate strong results on measurable outcomes in non-academic areas such as, but not limited to, parent satisfaction, school climate, student mental health, civic engagement, and crime prevention and reduction (up to 5 points). (NFP)

(2) *Quality of the continuation plan (up to 10 points).*

In determining the quality of the continuation plan, the Secretary considers the extent to which the eligible applicant is prepared to continue to operate the *charter school* that would receive grant funds in a manner consistent with the eligible applicant's application once the grant funds under this program are no longer available. (NFP)

(3) *Significance of contribution in assisting educationally disadvantaged students (up to 20 points).*

In determining the significance of the contribution the proposed project will make in *expanding* educational opportunity for *educationally disadvantaged students* and enabling those students to meet challenging State academic standards, the Secretary considers the quality of the plan to ensure that the *charter school* the applicant proposes to open, *replicate,* or *expand* will recruit, enroll, and effectively serve *educationally disadvantaged students,* which include *children with disabilities* and English learners. (NFP)

(4) *Quality of the project design (up to 25 points).*

The Secretary considers the quality of the design of the proposed project. In determining the quality of the design of the proposed project, the Secretary considers the following factors:

(i) The extent to which the proposed project demonstrates a rationale (as defined in 34 CFR 77.1(c)) (up to 10 points). (34 CFR 75.210(c)(2)(xxix))

(ii) The extent to which the goals, objectives, and outcomes to be achieved by the proposed project are clearly specified and measurable (up to 10 points). (34 CFR 75.210(c)(2)(i))

(iii) The extent to which the design for implementing and evaluating the proposed project will result in information to guide possible replication of project activities or strategies, including information about the effectiveness of the approach or strategies employed by the project (up to 5 points). (34 CFR 75.210(c)(2)(x))

(5) *Quality of the project personnel and management plan (up to 15 points).*

The Secretary considers the quality of the personnel who will carry out the proposed project and the management plan. In determining the quality of project personnel and the management plan, the Secretary considers the following factors:

(i) The extent to which the applicant encourages applications for employment from persons who are members of groups that have traditionally been underrepresented based on race, color, national origin, gender, age, or disability (up to 2 points). (34 CFR 75.210(e)(2))

(ii) The qualifications, including relevant training and experience, of key project personnel (up to 10 points). (34 CFR 75.210(e)(3)(i))

(iii) The adequacy of procedures for ensuring feedback and continuous improvement in the operation of the

proposed project (up to 3 points). (34 CFR 75.210(g)(2)(ii))

2. *Review and Selection Process:* We remind potential applicants that in reviewing applications in any discretionary grant competition, the Secretary may consider, under 34 CFR 75.217(d)(3), the past performance of the applicant in carrying out a previous award, such as the applicant's use of funds, achievement of project objectives, and compliance with grant conditions. The Secretary may also consider whether the applicant failed to submit a timely performance report or submitted a report of unacceptable quality.

In addition, in making a competitive grant award, the Secretary requires various assurances, including those applicable to Federal civil rights laws that prohibit discrimination in programs or activities receiving Federal financial assistance from the Department (34 CFR 100.4, 104.5, 106.4, 108.8, and 110.23).

3. *Risk Assessment and Specific Conditions:* Consistent with 2 CFR 200.205, before awarding grants under this competition the Department conducts a review of the risks posed by applicants. Under 2 CFR 3474.10, the Secretary may impose specific conditions and, in appropriate circumstances, high-risk conditions on a grant if the applicant or grantee is not financially stable; has a history of unsatisfactory performance; has a financial or other management system that does not meet the standards in 2 CFR part 200, subpart D; has not fulfilled the conditions of a prior grant; or is otherwise not responsible.

4. *Integrity and Performance System:* If you are selected under this competition to receive an award that over the course of the project period may exceed the simplified acquisition threshold (currently $250,000), under 2 CFR 200.205(a)(2) we must make a judgment about your integrity, business ethics, and record of performance under Federal awards—that is, the risk posed by you as an applicant—before we make an award. In doing so, we must consider any information about you that is in the integrity and performance system (currently referred to as the Federal Awardee Performance and Integrity Information System (FAPIIS)), accessible through SAM. You may review and comment on any information about yourself that a Federal agency previously entered and that is currently in FAPIIS.

Please note that, if the total value of your currently active grants, cooperative agreements, and procurement contracts from the Federal Government exceeds $10,000,000, the reporting requirements in 2 CFR part 200, Appendix XII, require you to report certain integrity information to FAPIIS semiannually. Please review the requirements in 2 CFR part 200, Appendix XII, if this grant plus all the other Federal funds you receive exceed $10,000,000.

VI. Award Administration Information

1. *Award Notices:* If your application is successful, we notify your U.S. Representative and U.S. Senators and send you a Grant Award Notification (GAN); or we may send you an email containing a link to access an electronic version of your GAN. We may notify you informally, also.

If your application is not evaluated or not selected for funding, we notify you.

2. *Administrative and National Policy Requirements:* We identify administrative and national policy requirements in the application package and reference these and other requirements in the *Applicable Regulations* section of this notice.

We reference the regulations outlining the terms and conditions of an award in the *Applicable Regulations* section of this notice and include these and other specific conditions in the GAN. The GAN also incorporates your approved application as part of your binding commitments under the grant.

3. *Open Licensing Requirements:* Unless an exception applies, if you are awarded a grant under this competition, you will be required to openly license to the public grant deliverables created in whole, or in part, with Department grant funds. When the deliverable consists of modifications to pre-existing works, the license extends only to those modifications that can be separately identified and only to the extent that open licensing is permitted under the terms of any licenses or other legal restrictions on the use of pre-existing works. Additionally, a grantee or subgrantee that is awarded competitive grant funds must have a plan to disseminate these public grant deliverables. This dissemination plan can be developed and submitted after your application has been reviewed and selected for funding. For additional information on the open licensing requirements please refer to 2 CFR 3474.20.

4. *Reporting:* (a) If you apply for a grant under this competition, you must ensure that you have in place the necessary processes and systems to comply with the reporting requirements in 2 CFR part 170 should you receive funding under the competition. This does not apply if you have an exception under 2 CFR 170.110(b).

(b) At the end of your project period, you must submit a final performance report, including financial information, as directed by the Secretary. If you receive a multiyear award, you must submit an annual performance report that provides the most current performance and financial expenditure information as directed by the Secretary under 34 CFR 75.118. The Secretary may also require more frequent performance reports under 34 CFR 75.720(c). For specific requirements on reporting, please go to *www.ed.gov/fund/grant/apply/appforms/appforms.html.*

(c) Under 34 CFR 75.250(b), the Secretary may provide a grantee with additional funding for data collection analysis and reporting. In this case the Secretary establishes a data collection period.

5. *Performance Measures:* (a) The Secretary has two performance indicators to measure progress toward achieving the purposes of the program, which are discussed elsewhere in this notice. The performance indicators are: (1) The number of *charter schools* in operation around the Nation and (2) the percentage of fourth- and eighth-grade *charter school* students who are achieving at or above the proficient level on State assessments in mathematics and reading/language arts. Additionally, the Secretary has established the following measure to examine the efficiency of the CSP: The Federal cost per student in implementing a successful school (defined as a school in operation for three or more consecutive years).

(b) *Project-Specific Performance Measures.* Applicants must propose project-specific *performance measures* and *performance targets* consistent with the objectives of the proposed project. Applications must provide the following information as directed under 34 CFR 75.110(b) and (c):

(1) *Performance measures.* How each proposed *performance measure* would accurately measure the performance of the project and how the proposed *performance measure* would be consistent with the *performance measures* established for the program funding the competition.

(2) *Baseline data.* (i) Why each proposed *baseline* is valid; or (ii) if the applicant has determined that there are no established *baseline* data for a particular *performance measure,* an explanation of why there is no established *baseline* and of how and when, during the project period, the applicant would establish a valid *baseline* for the *performance measure.*

(3) *Performance targets.* Why each proposed *performance target* is *ambitious* yet achievable compared to the *baseline* for the *performance measure* and when, during the project period, the applicant would meet the *performance target(s).*

(4) *Data collection and reporting.* (i) The data collection and reporting methods the applicant would use and why those methods are likely to yield reliable, valid, and meaningful performance data; and (ii) the applicant's capacity to collect and report reliable, valid, and meaningful performance data, as evidenced by high-quality data collection, analysis, and reporting in other projects or research.

All grantees must submit an annual performance report with information that is responsive to these *performance measures.*

6. *Continuation Awards:* In making a continuation award under 34 CFR 75.253, the Secretary considers, among other things: Whether a grantee has made substantial progress in achieving the goals and objectives of the project; whether the grantee has expended funds in a manner that is consistent with its approved application and budget; and, if the Secretary has established performance measurement requirements, the *performance targets* in the grantee's approved application.

In making a continuation award, the Secretary also considers whether the grantee is operating in compliance with the assurances in its approved application, including those applicable to Federal civil rights laws that prohibit discrimination in programs or activities receiving Federal financial assistance from the Department (34 CFR 100.4, 104.5, 106.4, 108.8, and 110.23).

7. *Project Director's Meeting:* Applicants approved for funding under this competition must attend a two-day meeting for project directors at a location to be determined in the continental United States during each year of the project. Applicants may include the cost of attending this meeting as an administrative cost in their proposed budgets.

VII. Other Information

Accessible Format: Individuals with disabilities can obtain this document and a copy of the application package in an accessible format (*e.g.,* braille, large print, audiotape, or compact disc) on request to the program contact person listed under **FOR FURTHER INFORMATION CONTACT**.

Electronic Access to This Document: The official version of this document is the document published in the **Federal Register**. You may access the official edition of the **Federal Register** and the Code of Federal Regulations at *www.govinfo.gov.* At this site you can view this document, as well as all other documents of this Department published in the **Federal Register**, in text or Portable Document Format (PDF). To use PDF you must have Adobe Acrobat Reader, which is available free at the site.

You may also access documents of the Department published in the **Federal Register** by using the article search feature at *www.federalregister.gov.* Specifically, through the advanced search feature at this site, you can limit your search to documents published by the Department.

Frank T. Brogan,

Assistant Secretary for Elementary and Secondary Education.

[FR Doc. 2020–11047 Filed 5–21–20; 8:45 am]

BILLING CODE 4000–01–P

DEPARTMENT OF ENERGY

Federal Energy Regulatory Commission

Combined Notice of Filings #1

Take notice that the Commission received the following electric corporate filings:

Docket Numbers: EC20–67–000.
Applicants: Broadview Energy JN, LLC, Broadview Energy KW, LLC.
Description: Application for Authorization Under Section 203 of the Federal Power Act, et al. of Broadview Energy JN, LLC, et al.
Filed Date: 5/15/20.
Accession Number: 20200515–5304.
Comments Due: 5 p.m. ET 6/5/20.

Take notice that the Commission received the following exempt wholesale generator filings:

Docket Numbers: EG20–166–000.
Applicants: Tehachapi Plains Wind, LLC.
Description: Notice of Self-Certification of Exempt Wholesale Generator Status of Tehachapi Plains Wind, LLC.
Filed Date: 5/15/20.
Accession Number: 20200515–5210.
Comments Due: 5 p.m. ET 6/5/20.

Take notice that the Commission received the following electric rate filings:

Docket Numbers: ER20–1396–001.
Applicants: VETCO.
Description: Tariff Amendment: Amendment to Baseline Filing to be effective 3/26/2020.
Filed Date: 5/18/20.
Accession Number: 20200518–5113.
Comments Due: 5 p.m. ET 5/26/20.

Docket Numbers: ER20–1803–001.
Applicants: Midcontinent Independent System Operator, Inc.
Description: Tariff Amendment: 2020–05–18_SA 3493 METC-River Fork Solar Substitute GIA (J806) to be effective 4/27/2020.
Filed Date: 5/18/20.
Accession Number: 20200518–5090.
Comments Due: 5 p.m. ET 6/8/20.

Docket Numbers: ER20–1811–001.
Applicants: Midcontinent Independent System Operator, Inc.
Description: Tariff Amendment: 2020–05–18_SA 3495 ITC-White Tail Solar Substitute GIA (J799) to be effective 5/5/2020.
Filed Date: 5/18/20.
Accession Number: 20200518–5094.
Comments Due: 5 p.m. ET 6/8/20.

Docket Numbers: ER20–1836–000.
Applicants: Dominion Energy South Carolina, Inc.
Description: Compliance filing: Order 864 Compliance Filing to be effective 1/27/2020.
Filed Date: 5/15/20.
Accession Number: 20200515–5204.
Comments Due: 5 p.m. ET 6/5/20.

Docket Numbers: ER20–1837–000.
Applicants: Duke Energy Carolinas, LLC, Duke Energy Florida, LLC, Duke Energy Progress, LLC.
Description: Compliance filing: Joint OATT Order 864 Compliance Filing to be effective 1/27/2020.
Filed Date: 5/15/20.
Accession Number: 20200515–5214.
Comments Due: 5 p.m. ET 6/5/20.

Docket Numbers: ER20–1838–000.
Applicants: Duke Energy Carolinas, LLC, Duke Energy Florida, LLC.
Description: Petition for Limited Waiver, et al. of the Duke Southeast Companies.
Filed Date: 5/15/20.
Accession Number: 20200515–5307.
Comments Due: 5 p.m. ET 6/5/20

Docket Numbers: ER20–1839–000.
Applicants: VETCO.
Description: Compliance filing: Compliance Filing for Order No. 864 to be effective 3/26/2020.
Filed Date: 5/18/20.
Accession Number: 20200518–5068.
Comments Due: 5 p.m. ET 6/8/20.

Docket Numbers: ER20–1840–000.
Applicants: Southern California Edison Company.
Description: § 205(d) Rate Filing: Second Amendment DSA P&G Oxnard Cogen2 SA No. 1086 to be effective 4/1/2020.
Filed Date: 5/18/20.
Accession Number: 20200518–5073.
Comments Due: 5 p.m. ET 6/8/20.

Docket Numbers: ER20–1841–000.
Applicants: PacifiCorp.
Description: Tariff Cancellation: Termination of NTTG Funding Agreement to be effective 4/30/2020.
Filed Date: 5/18/20.
Accession Number: 20200518–5078.
Comments Due: 5 p.m. ET 6/8/20.

Docket Numbers: ER20–1842–000.
Applicants: Arizona Public Service Company.
Description: § 205(d) Rate Filing: Service Agreement No. 379—TOUA NITS to be effective 5/1/2020.
Filed Date: 5/18/20.
Accession Number: 20200518–5105.
Comments Due: 5 p.m. ET 6/8/20.

Docket Numbers: ER20–1843–000.
Applicants: PJM Interconnection, L.L.C.
Description: § 205(d) Rate Filing: Original CRA, SA No. 5637; Non-Queue No. NQ168 to be effective 4/27/2020.
Filed Date: 5/18/20.
Accession Number: 20200518–5117.
Comments Due: 5 p.m. ET 6/8/20.

Docket Numbers: ER20–1844–000.
Applicants: New York State Electric & Gas Corporation, New York Independent System Operator, Inc.
Description: § 205(d) Rate Filing: 205 re: Engineering & Procurement Agreement (SA2534) between NYSEG & NY Transco to be effective 4/23/2020.
Filed Date: 5/18/20.
Accession Number: 20200518–5129.
Comments Due: 5 p.m. ET 6/8/20.

Docket Numbers: ER20–1845–000.
Applicants: PJM Interconnection, L.L.C.
Description: § 205(d) Rate Filing: Amendment to WMPA SA No. 4760; Queue AC1–147 re: Name Change to be effective 7/24/2017.
Filed Date: 5/18/20.
Accession Number: 20200518–5155.
Comments Due: 5 p.m. ET 6/8/20.

The filings are accessible in the Commission's eLibrary system by clicking on the links or querying the docket number.

Any person desiring to intervene or protest in any of the above proceedings must file in accordance with Rules 211 and 214 of the Commission's Regulations (18 CFR 385.211 and 385.214) on or before 5:00 p.m. Eastern time on the specified comment date. Protests may be considered, but intervention is necessary to become a party to the proceeding.

eFiling is encouraged. More detailed information relating to filing requirements, interventions, protests, service, and qualifying facilities filings can be found at: *http://www.ferc.gov/docs-filing/efiling/filing-req.pdf.* For other information, call (866) 208–3676 (toll free). For TTY, call (202) 502–8659.

Dated: May 18, 2020.

Nathaniel J. Davis, Sr.,

Deputy Secretary.

[FR Doc. 2020–11099 Filed 5–21–20; 8:45 am]

BILLING CODE 6717–01–P

DEPARTMENT OF ENERGY

Federal Energy Regulatory Commission

Combined Notice of Filings

Take notice that the Commission has received the following Natural Gas Pipeline Rate and Refund Report filings:

Docket Number: PR20–60–000.
Applicants: Columbia Gas of Ohio, Inc.
Description: Tariff filing per 284.123(b),(e)/: COH Rates effective Apr 29 2020 to be effective 4/29/2020.
Filed Date: 5/14/2020.
Accession Number: 202005145057.
Comments/Protests Due: 5 p.m. ET 6/4/2020.

Docket Numbers: RP19–57–001.
Applicants: Algonquin Gas Transmission, LLC.
Description: Compliance filing RP19–57 AGT Settlement to be effective 6/1/2020.
Filed Date: 5/15/20.
Accession Number: 20200515–5103.
Comments Due: 5 p.m. ET 5/27/20.

Docket Numbers: RP20–872–000.
Applicants: Northwest Pipeline LLC.
Description: § 4(d) Rate Filing: Limitation of Liability to be effective 6/15/2020.
Filed Date: 5/15/20.
Accession Number: 20200515–5091.
Comments Due: 5 p.m. ET 5/27/20.

Docket Numbers: RP20–873–000.
Applicants: Transcontinental Gas Pipe Line Company, LLC.
Description: § 4(d) Rate Filing: DPEs—PSNC (Battleground) to be effective 6/15/2020.
Filed Date: 5/15/20.
Accession Number: 20200515–5100.
Comments Due: 5 p.m. ET 5/27/20.

The filings are accessible in the Commission's eLibrary system by clicking on the links or querying the docket number.

Any person desiring to intervene or protest in any of the above proceedings must file in accordance with Rules 211 and 214 of the Commission's Regulations (18 CFR 385.211 and 385.214) on or before 5:00 p.m. Eastern time on the specified date(s). Protests may be considered, but intervention is necessary to become a party to the proceeding.

eFiling is encouraged. More detailed information relating to filing requirements, interventions, protests, service, and qualifying facilities filings can be found at: *http://www.ferc.gov/docs-filing/efiling/filing-req.pdf.* For other information, call (866) 208–3676 (toll free). For TTY, call (202) 502–8659.

Dated: May 18, 2020.

Nathaniel J. Davis, Sr.,

Deputy Secretary.

[FR Doc. 2020–11097 Filed 5–21–20; 8:45 am]

BILLING CODE 6717–01–P

DEPARTMENT OF ENERGY

Federal Energy Regulatory Commission

[Project No. 15027–000]

Agate Energy Park, LLC; Notice of Preliminary Permit Application Accepted for Filing and Soliciting Comments, Motions To Intervene, and Competing Applications

On April 21, 2020, the Agate Energy Park, LLC, filed an application for a preliminary permit, pursuant to section 4(f) of the Federal Power Act (FPA), proposing to study the feasibility of the proposed Agate Closed Loop Pumped Storage Hydro Project No. 15027–000, to be located in Twin Falls County, near the town of Rogerson and Twin Falls, Idaho. The sole purpose of a preliminary permit, if issued, is to grant the permit holder priority to file a license application during the permit term. A preliminary permit does not authorize the permit holder to perform any land-disturbing activities or otherwise enter upon lands or waters owned by others without the owners' express permission.

The proposed project would consist of the following: (1) A 3,000-foot-long, 1,000-foot-wide, oval-shaped upper impoundment created by a 5,700-foot-long, 75-foot-high earthen and/or roller compacted concrete embankment; (2) a 1,900-foot-long, 1,900-foot-wide, square-shaped lower reservoir formed by a 7,600-foot-long, 75-foot-high earthen and/or roller compacted concrete embankment; (3) a 5,000-foot-long, 18-foot-diameter steel penstock; (4) a 400-foot-long, 115-foot-wide powerhouse below grade and located adjacent to the lower reservoir housing three Quaternary units rated at 133 Mega-watt each; (5) a 7.5 mile-long transmission line interconnecting to existing transmission line owned by Idaho Power; and (6) appurtenant facilities. The proposed project would have an annual generation of 1,300 Gigawatt-hours.

Applicant Contact: Mr. Carl Borgquist, 612 East Main Street, Suite C, P.O. Box 309, Bozeman, MT 59771; phone: (406) 585–3006.

FERC Contact: Maryam Zavareh; phone: (202) 502–8474; email: *Maryam.Zavareh@ferc.gov.*

Deadline for filing comments, motions to intervene, competing applications (without notices of intent), or notices of intent to file competing applications: 60 days from the issuance of this notice. Competing applications and notices of intent must meet the requirements of 18 CFR 4.36.

The Commission strongly encourages electronic filing. Please file comments, motions to intervene, notices of intent, and competing applications using the Commission's eFiling system at *http://www.ferc.gov/docs-filing/efiling.asp.* Commenters can submit brief comments up to 6,000 characters, without prior registration, using the eComment system at *http://www.ferc.gov/docs-filing/ecomment.asp.* You must include your name and contact information at the end of your comments. For assistance, please contact FERC Online Support at *FERCOnlineSupport@ferc.gov,* (866) 208–3676 (toll free), or (202) 502–8659 (TTY).

More information about this project, including a copy of the application, can be viewed or printed on the eLibrary link of Commission's website at *http://www.ferc.gov/docs-filing/elibrary.asp.* Enter the docket number (P–15027) in the docket number field to access the document. For assistance, contact FERC Online Support.

Dated: May 18, 2020.

Kimberly D. Bose,

Secretary.

[FR Doc. 2020–11119 Filed 5–21–20; 8:45 am]

BILLING CODE 6717–01–P

DEPARTMENT OF ENERGY

Federal Energy Regulatory Commission

[Docket No. CP20–452–000]

National Fuel Gas Supply Corporation; Notice of Request Under Blanket Authorization

Take notice that on May 7, 2020, National Fuel Gas Supply Corporation (National Fuel), 6363 Main Street, Williamsville, New York 14221, filed a prior notice application pursuant to sections 157.205 and 157.216 of the Federal Energy Regulatory Commission's (Commission) regulations under the Natural Gas Act (NGA), and National Fuel's blanket certificate issued in Docket No. CP83–4–000. National Fuel requests authorization to abandon three injection/withdrawal (I/W) storage wells in its East Branch Storage Field (East Branch), and the associated well lines, all located in within the Allegheny National Forest (ANF) in Sheffield Township, Warren County, and Hamilton Township, McKean County, Pennsylvania, all as more fully set forth in the request, which is on file with the Commission and open to public inspection. The filing may also be viewed on the web at *http://www.ferc.gov* using the eLibrary link. Enter the docket number excluding the last three digits in the docket number field to access the document. For assistance, contact FERC at *FERCOnlineSupport@ferc.gov* or call toll-free, (866) 208–3676 or TTY, (202) 502–8659.

Specifically, National Fuel proposes to plug and abandon East Branch Wells 426P, 870P, and 873P, abandon the associated well lines SW426, SW870 and SW873 in place, all located in located within the Allegheny National Forest (ANF) in Sheffield Township, Warren County, and Hamilton Township, McKean County, Pennsylvania.

Any questions regarding this application should be directed to Meghan M. Emes Attorney, National Fuel Gas Supply Corporation, 6363 Main Street, Williamsville, New York 14221–5887 or phone (716) 857–7004, or by email at *emesm@natfuel.com.*

Any person or the Commission's staff may, within 60 days after issuance of the instant notice by the Commission, file pursuant to Rule 214 of the Commission's Procedural Rules (18 CFR 385.214) a motion to intervene or notice of intervention and pursuant to Section 157.205 of the regulations under the NGA (18 CFR 157.205), a protest to the request. If no protest is filed within the time allowed therefore, the proposed activity shall be deemed to be authorized effective the day after the time allowed for filing a protest. If a protest is filed and not withdrawn within 30 days after the allowed time for filing a protest, the instant request shall be treated as an application for authorization pursuant to section 7 of the NGA.

Pursuant to section 157.9 of the Commission's rules, 18 CFR 157.9, within 90 days of this Notice the Commission staff will either: Complete its environmental assessment (EA) and place it into the Commission's public record (eLibrary) for this proceeding, or issue a Notice of Schedule for Environmental Review. If a Notice of Schedule for Environmental Review is issued, it will indicate, among other milestones, the anticipated date for the Commission staff's issuance of the final environmental impact statement (FEIS) or EA for this proposal. The filing of the EA in the Commission's public record for this proceeding or the issuance of a Notice of Schedule for Environmental Review will serve to notify federal and state agencies of the timing for the completion of all necessary reviews, and the subsequent need to complete all federal authorizations within 90 days of the date of issuance of the Commission staff's FEIS or EA.

Persons who wish to comment only on the environmental review of this project should submit an original and two copies of their comments to the Secretary of the Commission. Environmental commenters will be placed on the Commission's environmental mailing list, and will be notified of any meetings associated with the Commission's environmental review process. Environmental commenters will not be required to serve copies of filed documents on all other parties. However, the non-party commenter will not receive copies of all documents filed by other parties or issued by the Commission and will not have the right to seek court review of the Commission's final order.

In addition to publishing the full text of this document in the **Federal Register**, the Commission provides all interested persons an opportunity to view and/or print the contents of this document via the internet through the Commission's Home Page (*http://ferc.gov*) using the eLibrary link. Enter the docket number excluding the last three digits in the docket number field to access the document. At this time, the Commission has suspended access to the Commission's Public Reference Room, due to the proclamation declaring a National Emergency concerning the Novel Coronavirus Disease (COVID–19), issued by the President on March 13, 2020. For assistance, contact Federal Energy Regulatory Commission at *FERCOnlineSupport@ferc.gov* or call toll-free, (886) 208–3676 or TYY, (202) 502–8659.

The Commission strongly encourages electronic filings of comments, protests and interventions in lieu of paper using the eFiling link at *http://www.ferc.gov.*

Dated: May 18, 2020.

Kimberly D. Bose,

Secretary.

[FR Doc. 2020–11117 Filed 5–21–20; 8:45 am]

BILLING CODE 6717–01–P

DEPARTMENT OF ENERGY

Federal Energy Regulatory Commission

[Project No. 14635–001]

Village of Gouverneur, New York; Notice of Application Accepted for Filing and Soliciting Motions To Intervene and Protests

Take notice that the following hydroelectric application has been filed with the Commission and is available for public inspection.

a. *Type of Application:* Original Minor License.

b. *Project No.:* 14635–001.

c. *Date filed:* September 20, 2019.

d. *Applicant:* Village of Gouverneur, New York.

e. *Name of Project:* Gouverneur Hydroelectric Project.

f. *Location:* On the Oswegatchie River, in the Village of Gouverneur, St. Lawrence County, New York. The project does not occupy any federal land.

g. *Filed Pursuant to:* Federal Power Act 16 U.S.C. 791(a)–825(r).

h. *Applicant Contact:* Ronald P. McDougall, Mayor, Village of Gouverneur, 33 Clinton Street, Gouverneur, NY 13642; (315) 287–1720.

i. *FERC Contact:* Jody Callihan, (202) 502–8278 or *jody.callihan@ferc.gov.*

j. *Deadline for filing motions to intervene and protests:* 60 days from the issuance date of this notice.

The Commission strongly encourages electronic filing. Please file motions to intervene and protests using the Commission's eFiling system at *http://www.ferc.gov/docs-filing/efiling.asp.* For assistance, please contact FERC Online Support at *FERCOnlineSupport@ferc.gov,* (866) 208–3676 (toll free), or (202) 502–8659 (TTY).

The Commission's Rules of Practice require all intervenors filing documents with the Commission to serve a copy of that document on each person on the official service list for the project. Further, if an intervenor files comments or documents with the Commission relating to the merits of an issue that may affect the responsibilities of a particular resource agency, they must also serve a copy of the document on that resource agency.

k. This application has been accepted for filing but is not ready for environmental analysis.

l. *The Gouverneur Project consists of the following existing facilities:* (1) A 250-foot-long concrete gravity dam, including two bridge piers, which separate the dam into three spillways that range in crest elevation from 403.4 to 403.7 feet North American Vertical Datum of 1988 (NAVD88); (2) an impoundment with a surface area of 109 acres at the normal pool elevation of 403.8 feet NAVD88; (3) a concrete intake structure containing two trash rack bays separated by a 2-foot-wide center pier; (4) a 20-foot-long by 36-foot-wide powerhouse that is integral with the dam and contains two vertical bulb turbines rated at 100 kilowatts each and two 100-kilovolt-ampere Westinghouse generators with a power factor of 0.8; and (5) appurtenant facilities.

The Village proposes to continue operating the project in a run-of-river mode. In addition, the Village proposes to release a minimum flow of 110 cubic feet per second over the project's spillways. The project generated an annual average of 1,195 megawatt-hours between 2014 and 2017.

m. In addition to publishing the full text of this document in the **Federal Register**, the Commission provides all interested individuals an opportunity to view and/or print the contents of this document via the internet through the Commission's Home Page (*www.ferc.gov*) using the eLibrary link. At this time, the Commission has suspended access to the Commission's Public Access Room due to the proclamation declaring a National Emergency concerning the Novel Coronavirus Disease (COVID–19), issued by the President on March 13, 2020. For assistance, contact FERC at *FERCOnlineSupport@ferc.gov* or call toll-free, (886) 208–3676 or TTY, (202) 502–8659.

You may also register online at *http://www.ferc.gov/docs-filing/esubscription.asp* to be notified via email of new filings and issuances related to this or other pending projects. For assistance, contact FERC Online Support.

n. Any qualified applicant desiring to file a competing application must submit to the Commission, on or before the specified intervention deadline date, a competing development application, or a notice of intent to file such an application. Submission of a timely notice of intent allows an interested person to file the competing development application no later than 120 days after the specified intervention deadline date. Applications for preliminary permits will not be accepted in response to this notice.

A notice of intent must specify the exact name, business address, and telephone number of the prospective applicant, and must include an unequivocal statement of intent to submit a development application. A notice of intent must be served on the applicant(s) named in this public notice.

Anyone may submit comments, a protest, or a motion to intervene in accordance with the requirements of Rules of Practice and Procedure, 18 CFR 385.210, .211, and .214. In determining the appropriate action to take, the Commission will consider all protests or other comments filed, but only those who file a motion to intervene in accordance with the Commission's Rules may become a party to the proceeding. Any comments, protests, or motions to intervene must be received on or before the specified comment date for the particular application.

When the application is ready for environmental analysis, the Commission will issue a public notice requesting comments, recommendations, terms and conditions, or prescriptions.

All filings must (1) bear in all capital letters the title PROTEST or MOTION TO INTERVENE, NOTICE OF INTENT TO FILE COMPETING APPLICATION, or COMPETING APPLICATION; (2) set forth in the heading the name of the applicant and the project number of the application to which the filing responds; (3) furnish the name, address, and telephone number of the person protesting or intervening; and (4) otherwise comply with the requirements of 18 CFR 385.2001 through 385.2005. Agencies may obtain copies of the application directly from the applicant. A copy of any protest or motion to intervene must be served upon each representative of the applicant specified in the particular application.

o. *Procedural schedule:* The application will be processed according to the following schedule. Revisions to the schedule will be made as appropriate.

Milestone	Target date
Issue Additional Information Request.	May 2020.
Responses to Additional Information Request.	June 2020.
Issue Scoping Document 1 for comments.	June 2020.
Comments on Scoping Document 1.	July 2020.
Issue Notice of Ready for Environmental Analysis.	July 2020.
Issue Scoping Document 2	September 2020.
Commission issues EA	January 2021.
Comments on EA	February 2021.

Dated: May 18, 2020.

Kimberly D. Bose,

Secretary.

[FR Doc. 2020–11118 Filed 5–21–20; 8:45 am]

BILLING CODE 6717–01–P

DEPARTMENT OF ENERGY

Federal Energy Regulatory Commission

[Docket No. CP20–436–000]

Texas Eastern Transmission, LP; Notice of Intent To Prepare an Environmental Assessment for the Proposed Appalachia to Market Project and Request for Comments on Environmental Issues

The staff of the Federal Energy Regulatory Commission (FERC or Commission) will prepare an environmental assessment (EA) that will discuss the environmental impacts of the Appalachia to Market Project involving construction and operation of facilities by Texas Eastern Transmission, LP (Texas Eastern) in Westmoreland, Berks, and Fayette Counties, Pennsylvania. The Commission will use this EA in its decision-making process to determine whether the project is in the public convenience and necessity.

This notice announces the opening of the scoping process the Commission will use to gather input from the public and interested agencies about issues regarding the project. The National Environmental Policy Act (NEPA) requires the Commission to take into account the environmental impacts that could result from its action whenever it considers the issuance of a Certificate of Public Convenience and Necessity. NEPA also requires the Commission to discover concerns the public may have about proposals. This process is referred to as ''scoping.'' The main goal of the scoping process is to focus the analysis in the EA on the important environmental issues. By this notice, the Commission requests public comments on the scope of issues to address in the EA. To ensure that your comments are timely and properly recorded, please submit your comments so that the Commission receives them in Washington, DC on or before 5:00 p.m. Eastern Time on June 19, 2020.

You can make a difference by submitting your specific comments or concerns about the project. Your comments should focus on the potential environmental effects, reasonable alternatives, and measures to avoid or lessen environmental impacts. Your input will help the Commission staff determine what issues they need to evaluate in the EA. Commission staff will consider all filed comments during the preparation of the EA.

If you sent comments on this project to the Commission before the opening of this docket on May 1, 2020, you will need to file those comments in Docket No. CP20–436–000 to ensure they are considered as part of this proceeding.

This notice is being sent to the Commission's current environmental mailing list for this project. State and local government representatives should notify their constituents of this proposed project and encourage them to comment on their areas of concern.

If you are a landowner receiving this notice, a pipeline company representative may contact you about the acquisition of an easement to construct, operate, and maintain the proposed facilities. The company would seek to negotiate a mutually acceptable easement agreement. You are not required to enter into an agreement. However, if the Commission approves the project, that approval conveys with it the right of eminent domain. Therefore, if you and the company do not reach an easement agreement, the pipeline company could initiate condemnation proceedings in court. In such instances, compensation would be determined by a judge in accordance with state law.

Texas Eastern provided landowners with a fact sheet prepared by the FERC entitled An Interstate Natural Gas Facility On My Land? What Do I Need To Know? This fact sheet addresses a number of typically asked questions, including the use of eminent domain and how to participate in the Commission's proceedings. It is also available for viewing on the FERC website (*www.ferc.gov*) at *https://www.ferc.gov/resources/guides/gas/gas.pdf.*

Public Participation

The Commission offers a free service called eSubscription which makes it easy to stay informed of all issuances and submittals regarding the dockets/projects to which you subscribe. These instant email notifications are the fastest way to receive notification and provide a link to the document files which can reduce the amount of time you spend researching proceedings. To sign up go to *www.ferc.gov/docs-filing/esubscription.asp.*

For your convenience, there are three methods you can use to submit your comments to the Commission. The Commission encourages electronic filing of comments and has staff available to assist you at (866) 208–3676 or *FercOnlineSupport@ferc.gov.* Please carefully follow these instructions so that your comments are properly recorded.

(1) You can file your comments electronically using the *eComment* feature, which is located on the Commission's website (*www.ferc.gov*) under the link to *Documents and Filings.* Using eComment is an easy method for submitting brief, text-only comments on a project;

(2) You can file your comments electronically by using the *eFiling* feature, which is located on the Commission's website (*www.ferc.gov*) under the link to *Documents and Filings.* With eFiling, you can provide comments in a variety of formats by attaching them as a file with your submission. New eFiling users must first create an account by clicking on *eRegister.* You will be asked to select the type of filing you are making; a comment on a particular project is considered a Comment on a Filing; or

(3) You can file a paper copy of your comments by mailing them to the following address. Be sure to reference the project docket number (CP20–436–000) with your submission: Kimberly D. Bose, Secretary, Federal Energy Regulatory Commission, 888 First Street NE, Room 1A, Washington, DC 20426.

Summary of the Proposed Project

The Appalachia to Market Project would consist of the following facilities and actions, all in Pennsylvania. Specifically, Texas Eastern would construct:

- Approximately 0.8 mile of 30-inch-diameter pipeline loop [1] in the same-trench as a segment of an abandoned 30-inch-diameter pipe (that would be removed for this project) on the Texas Eastern system in Westmoreland County;
- one crossover at the existing Bechtelsville pig [2]-launcher site in Berks County;
- one crossover at the existing Uniontown pig-receiver site in Fayette County; and
- other related appurtenances.

The Appalachia to Market Project would provide up to 18,000 dekatherms per day of firm natural gas transportation service to UGI Utilities Inc. at an existing delivery point near Reading, Pennsylvania. The general location of the project facilities is shown in appendix 1.[3]

[1] A pipeline loop is a segment of pipe constructed parallel to an existing pipeline to increase capacity.

[2] A pig is a tool that the pipeline company inserts into and pushes through the pipeline for cleaning the pipeline, conducting internal inspections, or other purposes.

[3] The appendices referenced in this notice will not appear in the **Federal Register**. Copies of appendices were sent to all those receiving this notice in the mail and are available at *www.ferc.gov* using the link called ''eLibrary'' or from the Commission's Public Reference Room, 888 First Street NE, Washington, DC 20426, or call (202) 502–

Continued

Land Requirements for Construction

The proposed project has been designed to minimize impacts by replacing existing pipeline and installing crossovers at previously existing aboveground facilities within and directly adjacent to Texas Eastern's existing right-of-way. Construction of the proposed facilities would disturb about 16.2 acres of land for the aboveground facilities and the pipeline. Following construction, Texas Eastern would maintain 12.9 acres for permanent operation of the project's facilities. The entire proposed 0.8-mile Delmont Loop pipeline route parallels existing pipeline, utility, or road rights-of-way with the exception of the proposed launcher and receiver barrels, which will convert 3.6 acres of land use from open land to industrial/commercial.

The EA Process

The EA will discuss impacts that could occur as a result of the construction and operation of the proposed project under these general headings:

- geology and soils;
- water resources and wetlands;
- vegetation and wildlife;
- threatened and endangered species;
- cultural resources;
- land use;
- air quality and noise;
- public safety; and
- cumulative impacts.

Commission staff will also evaluate reasonable alternatives to the proposed project or portions of the project, and make recommendations on how to lessen or avoid impacts on the various resource areas.

The EA will present Commission staff's independent analysis of the issues. The EA will be available in electronic format in the public record through eLibrary [4] and the Commission's website (*https://www.ferc.gov/industries/gas/enviro/eis.asp*). If eSubscribed, you will receive instant email notification when the EA is issued. The EA may be issued for an allotted public comment period. Commission staff will consider all comments on the EA before making recommendations to the Commission. To ensure Commission staff have the opportunity to address your comments, please carefully follow the instructions in the Public Participation section, beginning on page 2 of this notice.

With this notice, the Commission is asking agencies with jurisdiction by law and/or special expertise with respect to the environmental issues of this project to formally cooperate in the preparation of the EA.[5] Agencies that would like to request cooperating agency status should follow the instructions for filing comments provided under the Public Participation section of this notice.

Consultation Under Section 106 of the National Historic Preservation Act

In accordance with the Advisory Council on Historic Preservation's implementing regulations for section 106 of the National Historic Preservation Act, the Commission is using this notice to initiate consultation with the Pennsylvania State Historic Preservation Office, and to solicit their views and those of other government agencies, interested Indian tribes, and the public on the project's potential effects on historic properties.[6] The EA for this project will document findings on the impacts on historic properties and summarize the status of consultations under section 106.

Environmental Mailing List

The environmental mailing list includes federal, state, and local government representatives and agencies; elected officials; environmental and public interest groups; Native American Tribes; other interested parties; and local libraries and newspapers. This list also includes all affected landowners (as defined in the Commission's regulations) who are potential right-of-way grantors, whose property may be used temporarily for project purposes, or who own homes within certain distances of aboveground facilities, and anyone who submits comments on the project. Commission staff will update the environmental mailing list as the analysis proceeds to ensure that Commission notices related to this environmental review are sent to all individuals, organizations, and government entities interested in and/or potentially affected by the proposed project.

If the Commission issues the EA for an allotted public comment period, a *Notice of Availability* of the EA will be sent to the environmental mailing list and will provide instructions to access the electronic document on the FERC's website (*www.ferc.gov*).

If you need to make changes to your name/address, or if you would like to remove your name from the mailing list, please return the attached ''Mailing List Update Form'' (appendix 2).

Additional Information

Additional information about the project is available from the Commission's Office of External Affairs, at (866) 208–FERC, or on the FERC website at *www.ferc.gov* using the eLibrary link. Click on the eLibrary link, click on General Search and enter the docket number in the Docket Number field, excluding the last three digits (*i.e.,* CP20–436). Be sure you have selected an appropriate date range. For assistance, please contact FERC Online Support at *FercOnlineSupport@ferc.gov* or (866) 208–3676, or for TTY, contact (202) 502–8659. The eLibrary link also provides access to the texts of all formal documents issued by the Commission, such as orders, notices, and rulemakings.

Public sessions or site visits will be posted on the Commission's calendar located at *www.ferc.gov/EventCalendar/EventsList.aspx* along with other related information.

Dated: May 18, 2020.

Kimberly D. Bose,

Secretary.

[FR Doc. 2020–11120 Filed 5–21–20; 8:45 am]

BILLING CODE 6717–01–P

8371. For instructions on connecting to eLibrary, refer to the last page of this notice.

[4] For instructions on connecting to eLibrary, refer to the last page of this notice.

[5] The Council on Environmental Quality regulations addressing cooperating agency responsibilities are at Title 40, Code of Federal Regulations, Part 1501.6.

[6] The Advisory Council on Historic Preservation's regulations are at Title 36, Code of Federal Regulations, Part 800. Those regulations define historic properties as any prehistoric or historic district, site, building, structure, or object included in or eligible for inclusion in the National Register of Historic Places.

DEPARTMENT OF ENERGY

Western Area Power Administration

Agency Information Collection Extension

AGENCY: Western Area Power Administration, Department of Energy.

ACTION: Notice and request for comments.

SUMMARY: The Western Area Power Administration (WAPA), pursuant to the Paperwork Reduction Act of 1995, intends to extend an information collection request with the Office of Management and Budget (OMB) for three years with ministerial changes. The current OMB control number 1910–5136 for WAPA's Applicant Profile Data (APD) form expires November 30, 2020. WAPA intends to extend the APD form under the OMB control number to November 30, 2023. WAPA is seeking comments on this proposed information collection extension.

DATES: Comments regarding this proposed information collection must be received on or before the end of the comment period that closes on July 21, 2020. WAPA must receive comments by the end of the comment period to ensure consideration.

ADDRESSES: Written comments may be sent to Mr. Christopher O. Magee, Records and Information Management Program Manager, Western Area Power Administration, P.O. Box 281213, Lakewood, CO 80228, or by email to *records@wapa.gov.* Please refer to ''Paperwork Reduction Act Information Collection'' as the subject of your comments.

FOR FURTHER INFORMATION CONTACT: Please contact Ms. Erin Green, Power Marketing and Energy Services Specialist, Western Area Power Administration, P.O. Box 281213, Lakewood, CO 80228, telephone (720) 962–7016, or email *egreen@wapa.gov.* The proposed APD form is available on WAPA's website at *www.wapa.gov/PowerMarketing/Pages/applicant-profile-data.aspx.*

SUPPLEMENTARY INFORMATION: This information collection request relates to: (1) *OMB No.:* 1910–5136; (2) *Information Collection Request Title:* Western Area Power Administration Applicant Profile Data; (3) *Type of Review:* Renewal; (4) *Purpose:* The proposed collection of information is necessary for the proper performance of WAPA's power marketing functions. WAPA markets a limited amount of Federal hydropower and has discretion to determine who will receive an allocation of Federal hydropower. Due to the limited quantity and high demand for WAPA's hydropower available under established marketing plans, WAPA may need to collect information using the APD to evaluate the entities applying to receive allocations of Federal hydropower; (5) *Annual Estimated Number of Respondents:* 33.3; (6) *Annual Estimated Number of Total Responses:* 33.3; (7) *Annual Estimated Number of Burden Hours:* 250; and (8) *Annual Estimated Reporting and Recordkeeping Cost Burden:* $32,046.98.

I. Statutory Authority

The Reclamation Act of 1902 established the Federal reclamation program.[1] The basic principle of the Reclamation Act of 1902 was that the United States, through the Secretary of the Interior, would build and operate irrigation works from the proceeds of public land sales in sixteen arid Western states (a seventeenth—Texas—was added in 1906). The Reclamation Project Act of 1939 expanded the purposes of the reclamation program and specified certain terms for contracts that the Secretary of the Interior enters into to furnish water and power.[2] Congress enacted the Reclamation Laws for purposes that include enhancing navigation, protection from floods, reclaiming the arid lands in the Western United States, and for fish and wildlife.[3] Congress intended that the production of power would be a supplemental feature of the multi-purpose water projects authorized under the Reclamation Laws.[4] Section 9 of the Reclamation Project Act of 1939 provides that no contract entered into by the United States for power may, in the judgment of the Secretary, ''impair the efficiency of the project for irrigation purposes.'' [5] Section 5 of the Flood Control Act of 1944, as amended,[6] is read *in pari materia* with the Reclamation Laws with respect to WAPA.[7] In 1977, section 302 of the Department of Energy Organization Act transferred the power marketing functions of the Department of the Interior to the Secretary of Energy, acting by and through a separate Administrator for WAPA.[8] Under this authority, WAPA markets Federal hydropower. As part of WAPA's marketing authority, WAPA needs to obtain information from interested entities who desire an allocation of Federal power using the APD form. The Paperwork Reduction Act of 1995 requires WAPA to obtain a clearance from OMB before collecting this information through the APD form.[9]

II. This Process Determines the Format of the APD and Is Not a Call for Applications

This public process and the associated **Federal Register** notice only determine the information that WAPA will collect from an entity desiring to apply for a Federal power allocation. This public process is a legal requirement that WAPA must fulfill before WAPA can request information from potential preference customers.

This public process is not the process whereby interested parties request an allocation of Federal power. The actual allocation of power is outside the scope of this proceeding. Please do not submit a request for Federal power in this process. Later, and as appropriate, WAPA will issue calls for applications as part of project-specific marketing plans. When WAPA issues a call for applications, the information WAPA proposes to collect is voluntary. WAPA will use the information collected, in conjunction with its project–specific marketing plans, to determine an entity's eligibility, and ultimately which entities will receive an allocation of Federal power.

III. Invitation for Comments

WAPA intends to extend and reuse the APD form approved under OMB control number 1910–5136. The extension would continue use of the form through November 30, 2023. WAPA is proposing some ministerial changes to the APD. The proposed APD form, including a list of ministerial changes and the reason for such changes, is available on WAPA's website. Comments are invited on: (1) Whether the extended collection of information is necessary for the proper performance of the functions of the agency, including whether the information shall have practical utility; (2) the accuracy of the agency's estimate of the burden of the proposed collection of information, including the validity of the methodology and assumptions used; (3) ways to enhance the quality, utility, and clarity of the information to be collected; and (4) ways to minimize the burden of the collection of information on respondents, including the use of automated electronic, mechanical or other collection techniques, or other forms of information technology. After considering all public comments, WAPA will publish a second notice in the **Federal Register** submitting the APD to OMB.

Signing Authority

This document of the Department of Energy was signed on May 15, 2020, by Mark A. Gabriel, Administrator, Western Area Power Administration, pursuant to delegated authority from the Secretary of Energy. That document, with the original signature and date, is maintained by DOE. For administrative purposes only, and in compliance with requirements of the Office of the Federal Register, the undersigned DOE Federal Register Liaison Officer has been authorized to sign and submit the

[1] *See* Act of June 17, 1902, ch. 1093, 32 Stat. 388 (1902), as amended and supplemented.

[2] *See* Act of Aug. 4, 1939, ch. 418, 53 Stat. 1187 (1939), as amended and supplemented.

[3] *See, e.g.,* Act of Oct. 26, 1937, ch. 832, 50 Stat. 844, 850 (1937), as amended and supplemented.

[4] *See id.*

[5] 43 U.S.C. 485h(c)(1).

[6] 16 U.S.C. 825s.

[7] *See, e.g., United States* v. *Sacramento Mun. Util. Dist.,* 652 F.2d 1341, 1345 n.4 (9th Cir. 1981) (citing *N. Cal. Power Agency* v. *Morton,* 396 F. Supp. 1187, 1189 (D.D.C. 1975). *See also* Disposition of Surplus Power Generated at Clark Hill Reservoir Project, 41 Op. Att'y Gen. 236, 245 (1955).

[8] *See* 42 U.S.C. 7152(a)(1)(E).

[9] *See* 44 U.S.C. 3501 *et seq.*

document in electronic format for publication, as an official document of the Department of Energy. This administrative process in no way alters the legal effect of this document upon publication in the **Federal Register**.

Signed in Washington, DC, on May 19, 2020.

Treena V. Garrett,

Federal Register Liaison Officer, U.S. Department of Energy.

[FR Doc. 2020–11074 Filed 5–21–20; 8:45 am]

BILLING CODE 6450–01–P

ENVIRONMENTAL PROTECTION AGENCY

[EPA–HQ–OAR–2018–0279; FRL–10009–30–OAR]

Release of Policy Assessment for the Ozone National Ambient Air Quality Standards

AGENCY: Environmental Protection Agency (EPA).

ACTION: Notice of availability.

SUMMARY: On or about May 29, 2020, the Environmental Protection Agency (EPA) will make available the document, *Policy Assessment for the Ozone National Ambient Air Quality Standards* (PA, EPA–452/R–20–001). This document was prepared as part of the current review of the national ambient air quality standards (NAAQS) for photochemical oxidants including ozone (O_3). The PA serves to ''bridge the gap'' between the currently available scientific and technical information and the judgments required of the Administrator in determining whether to retain or revise the existing O_3 NAAQS. The primary and secondary O_3 NAAQS are set to protect the public health and the public welfare from O_3 and other photochemical oxidants in ambient air.

DATES: This document will be available on or about May 29, 2020.

ADDRESSES: This document will be available on the EPA's website at *https://www.epa.gov/naaqs/ozone-o3-air-quality-standards.* The document will be accessible under ''Policy Assessments'' from the current review.

FOR FURTHER INFORMATION CONTACT: Dr. Deirdre L. Murphy, Office of Air Quality Planning and Standards, (Mail Code C504–06), U.S. Environmental Protection Agency, Research Triangle Park, NC 27711; telephone number: 919–541–0729, fax number: 919–541–0237; or email: *murphy.deirdre@epa.gov.*

SUPPLEMENTARY INFORMATION: Two sections of the Clean Air Act (CAA or the Act) govern the establishment and revision of the NAAQS. Section 108 directs the Administrator to identify and list certain air pollutants and then issue ''air quality criteria'' for those pollutants. The air quality criteria are to ''accurately reflect the latest scientific knowledge useful in indicating the kind and extent of all identifiable effects on public health or welfare which may be expected from the presence of such pollutant in the ambient air . . .'' (CAA section 108(a)(2)). Under section 109 of the Act, the EPA is then to establish primary (health-based) and secondary (welfare-based) NAAQS for each pollutant for which the EPA has issued air quality criteria. Section 109(d)(1) of the Act requires periodic review and, if appropriate, revision of existing air quality criteria. Revised air quality criteria are to reflect advances in scientific knowledge on the effects of the pollutant on public health and welfare. Under the same provision, the EPA is also to periodically review and, if appropriate, revise the NAAQS, based on the revised air quality criteria.

The Act additionally requires appointment of an independent scientific review committee that is to periodically review the existing air quality criteria and NAAQS and to recommend any new standards and revisions of existing criteria and standards as may be appropriate (CAA section 109(d)(2)(A)–(B)). Since the early 1980s, the requirement for an independent scientific review committee has been fulfilled by the Clean Air Scientific Advisory Committee (CASAC).

Presently the EPA is reviewing the air quality criteria and NAAQS for photochemical oxidants and O_3.[1] The EPA's overall plan for this review is presented in the Integrated Review Plan for the Ozone NAAQS (IRP).[2] As described in the IRP, the EPA has prepared an Integrated Science Assessment for Ozone and Related Photochemical Oxidants (ISA), a draft of which was released in September 2019 for public comment and review by the CASAC.[3] A draft of the PA was also reviewed by the CASAC (84 FR 58713, November 1, 2019; 85 FR 4656, January 27, 2020). The final PA reflects consideration of the advice and comments from the CASAC,[4] as well as public comments, on the draft PA. The PA serves to ''bridge the gap'' between the scientific and technical information in the final ISA and any air quality, exposure and risk analyses available in the review, and the judgments required of the Administrator in determining whether to retain or revise the existing ozone NAAQS. The PA builds upon information presented in the ISA and quantitative air quality, exposure and risk analyses (presented in appendices to the PA). The PA document will be available on or about May 29, 2020, on the EPA's website at *https://www.epa.gov/naaqs/ozone-o3-air-quality-standards.* The document briefly described here does not represent and should not be construed to represent any final EPA policy, viewpoint, or determination.

Dated: May 19, 2020.

Panagiotis Tsirigotis,

Director, Office of Air Quality Planning and Standards.

[FR Doc. 2020–11121 Filed 5–21–20; 8:45 am]

BILLING CODE 6560–50–P

[1] The EPA's call for information for this review was issued on June 26, 2018 (83 FR 29785).

[2] The IRP is available at *https://www.epa.gov/naaqs/ozone-o3-standards-planning-documents-current-review.*

[3] The ISA is available at: *https://www.epa.gov/naaqs/ozone-o3-standards-integrated-science-assessments-current-review.*

[4] The CASAC comments are available at: *https://yosemite.epa.gov/sab/sabproduct.nsf/WebProjectsbyTopicCASAC!OpenView.*

ENVIRONMENTAL PROTECTION AGENCY

[ER–FRL–9050–9]

Environmental Impact Statements; Notice of Availability

Responsible Agency: Office of Federal Activities, General Information 202–564–5632 or *https://www.epa.gov/nepa.*

Weekly receipt of Environmental Impact Statements (EIS)

Filed May 11, 2020, 10 a.m. EST

Through May 18, 2020, 10 a.m. EST

Pursuant to 40 CFR 1506.9.

Section 309(a) of the Clean Air Act requires that EPA make public its comments on EISs issued by other Federal agencies. EPA's comment letters on EISs are available at: *https://cdxnodengn.epa.gov/cdx-enepa-public/action/eis/search.*

EIS No. 20200106, Draft, BR, ND, Eastern North Dakota Alternate Water Supply, Comment Period Ends: 07/06/2020, Contact: Damien Reinhart 701–221–1275.

EIS No. 20200107, Final, USFWS, CA, Placer County Conservation Program Final Environmental Impact Statement/Environmental Impact Report, Review Period Ends: 06/22/2020, Contact: Stephanie Jentsch 916–414–6600.

EIS No. 20200108, Final, BLM, ID, Blackrock Land Exchange Final Environmental Impact Statement, Review Period Ends: 07/21/2020, Contact: Bryce Anderson 208–478–6353. Amended Notice:

EIS No. 20200091, Draft, CHSRA, CA, San Jose to Merced Project Section Draft Environmental Impact Report/Environmental Impact Statement, Comment Period Ends: 06/23/2020, Contact: Dan McKell 916–330–5668. Revision to FR Notice Published 4/24/2020; Extending the Comment Period from 6/08/2020 to 6/23/2020.

EIS No. 20200099, Final, APHIS, PRO, Revisions to USDA–APHIS 7 CFR part 340 Regulations Governing the Importation, Interstate Movement, and Environmental Release of Certain Genetically Engineered Organisms, Review Period Ends: 06/22/2020, Contact: Cindy Eck 301–851–3892. Revision to FR Notice Published 5/08/2020; Extending the Comment Period from 6/08/2020 to 6/22/2020.

Dated: May 18, 2020.

Cindy S. Barger,

Director, NEPA Compliance Division, Office of Federal Activities.

[FR Doc. 2020–11069 Filed 5–21–20; 8:45 am]

BILLING CODE 6560–50–P

ENVIRONMENTAL PROTECTION AGENCY

[EPA–HQ–OAR–2014–0548; FRL 10005–92–OMS]

Information Collection Request Submitted to OMB for Review and Approval; Comment Request; Reformulated Gasoline and Conventional Gasoline: Requirements for Refiners, Oxygenate Blenders, and Importers of Gasoline; Requirements for Parties in the Gasoline Distribution Network (Renewal)

AGENCY: Environmental Protection Agency (EPA).

ACTION: Notice.

SUMMARY: The Environmental Protection Agency (EPA) has submitted an information collection request (ICR), Reformulated Gasoline and Conventional Gasoline: Requirements for Refiners, Oxygenate Blenders, and Importers of Gasoline; Requirements for Parties in the Gasoline Distribution Network (EPA ICR Number 1591.27, OMB Control Number 2060–0277) to the Office of Management and Budget (OMB) for review and approval in accordance with the Paperwork Reduction Act (PRA). This is a proposed extension of the ICR, which is currently approved through May 31, 2020. Public comments were previously requested via the **Federal Register** on August 20, 2019 during a 60-day comment period. This notice allows for an additional 30 days for public comment. A fuller description of the ICR is given below, including its estimated burden and cost to the public. An agency may not conduct, or sponsor and a person is not required to respond to a collection of information unless it displays a currently valid OMB control number.

DATES: Additional comments must be submitted on or before June 22, 2020.

ADDRESSES: Submit your comments to EPA, referencing Docket ID No. EPA–HQ–OAR–2014–0548, online using *www.regulations.gov* (our preferred method), by email to *a-and-r-docket@epa.gov,* or by mail to: EPA Docket Center, Environmental Protection Agency, Mail Code 28221T, 1200 Pennsylvania Ave. NW, Washington, DC 20460. EPA's policy is that all comments received will be included in the public docket without change including any personal information provided, unless the comment includes profanity, threats, information claimed to be Confidential Business Information (CBI), or other information whose disclosure is restricted by statute.

Submit written comments and recommendations to OMB for the proposed information collection within 30 days of publication of this notice to *www.reginfo.gov/public/do/PRAMain.* Find this particular information collection by selecting ''Currently under 30-day Review—Open for Public Comments'' or by using the search function.

FOR FURTHER INFORMATION CONTACT: Jose Solar, Compliance Division, Office of Transportation and Air Quality, (Mail Code 6405A), Environmental Protection Agency, 1200 Pennsylvania Ave. NW, Washington, DC 20460; telephone number: 202–343–9027; fax number: 202–343–2801; email address: *Solar.Jose@epa.gov.*

SUPPLEMENTARY INFORMATION: Supporting documents, which explain in detail the information that the EPA will be collecting, are available in the public docket for this ICR. The docket can be viewed online at *www.regulations.gov* or in person at the EPA Docket Center, WJC West, Room 3334, 1301 Constitution Ave. NW, Washington, DC. The telephone number for the Docket Center is 202–566–1744. For additional information about EPA's public docket, visit *http://www.epa.gov/dockets.*

Abstract: The regulations at 40 CFR 80 require gasoline be reformulated to reduce toxic and ozone-forming emissions. The regulations also contain reporting and recordkeeping requirements for the production, importation, transport and storage of gasoline, in order to demonstrate compliance and facilitate compliance and enforcement. For example, refiners must report on the benzene content of gasoline and other properties. Information claimed as confidential is handled in accordance with EPA Freedom of Information Act regulations at 40 CFR part 2. Electronic files received by the Agency are stored in a secure data base.

Form Numbers: RFG0302, RFG0303, RFG0400, RFG0500, RFG0800, RFG0900, RFG1000, RFG1200, RFG1300, RFG1400, RFG1600, RFG1700, RFG1800, RFG1900, RFG2000, RFG2200, RFG2500, 3520–27, GSF0402, 5900–321. All information about registration and links to reporting forms and the URF standard reporting template are available at *https://www.epa.gov/fuels-registration-reporting-and-compliance-help.*

Respondents/affected entities: Refiners, importers, terminals, pipelines, truckers and other distributors and retailers/wholesale purchase-consumers. Some refiners are importers but that is not always the case.

Respondent's obligation to respond: Mandatory per 40 CFR part 80.

Estimated number of respondents: 4,281.

Frequency of response: Quarterly, annually, or on occasion.

Total estimated burden: 126,846 hours (per year). Burden is defined at 5 CFR 1320.03(b).

Total estimated cost: $39,450,368 (per year), includes $24,713,032 annualized capital or operation & maintenance costs.

Changes in Estimates: The burden estimate for each of the listed categories has a slight reduction of 400 hours and one fewer report compared to the existing clearance; these are due to the expiration of the provision allowing for the submittal of a Foreign Refinery Baseline Petition. Thus, there is a decrease of the estimated burden hours from 127,246 currently identified in the OMB Inventory of Approved ICR Burdens to 126,846 hours and a decrease in the number of reports from 54,078 to 54,076.

Courtney Kerwin,

Director, Regulatory Support Division.

[FR Doc. 2020–11066 Filed 5–21–20; 8:45 am]

BILLING CODE 6560–50–P

ENVIRONMENTAL PROTECTION AGENCY

[EPA–HQ–OW–2019–0675; FRL 10008–88–OW]

Draft Ambient Water Quality Criteria Recommendations for Lakes and Reservoirs of the Conterminous United States: Information Supporting the Development of Numeric Nutrient Criteria

AGENCY: Environmental Protection Agency (EPA).

ACTION: Notice of availability; request for comments.

SUMMARY: The United States Environmental Protection Agency (EPA) announces the release of the *Draft Ambient Water Quality Criteria Recommendations for Lakes and Reservoirs of the Conterminous United States: Information Supporting the Development of Numeric Nutrient Criteria* for a 60-day comment period for scientific input. These draft national criteria recommendations are models for total nitrogen and total phosphorus concentrations in lakes and reservoirs to protect three different designated uses—aquatic life, recreation, and drinking water source protection—from the adverse effects of nutrient pollution. Nutrient pollution can degrade the conditions of water bodies worldwide, and in lakes and reservoirs the effects of excess nitrogen and phosphorus may be particularly evident. These draft criteria recommendations are based on stressor-response models, which link nutrient pollution stressors (nitrogen, phosphorus) to responses associated with protection of designated uses. These draft criteria recommendations, when finalized, will replace the EPA's previously recommended ambient nutrient criteria for lakes and reservoirs. Models and associated criteria provided in this document are based on national data. States and authorized tribes can also incorporate local data, when available, into the national models, helping states and authorized tribes to develop numeric nutrient criteria that apply relationships estimated from national data while accounting for unique local conditions.

Following closure of this 60-day public comment period, the EPA will consider the comments, revise the draft document, as appropriate, and then publish a final document that will provide recommendations for states and authorized tribes to establish water quality standards under the Clean Water Act (CWA).

DATES: Comments must be received on or before July 21, 2020.

ADDRESSES: Submit your comments, identified by Docket ID No. EPA–HQ–OW–2019–0675, to the Federal eRulemaking Portal: *https://www.regulations.gov* (preferred method). Follow the online instructions for submitting comments. Once submitted, comments cannot be edited or withdrawn. The EPA may publish any comment received to its public docket. Do not submit electronically any information you consider to be Confidential Business Information (CBI) or other information whose disclosure is restricted by statute. Multimedia submissions (audio, video, etc.) must be accompanied by a written comment. The written comment is considered the official comment and should include discussion of all points you wish to make. The EPA will generally not consider comments or comment contents located outside of the primary submission (*i.e.,* on the web, cloud, or other file sharing system). For additional submission methods, the full EPA public comment policy, information about CBI or multimedia submissions, and general guidance on making effective comments, please visit *https://www2.epa.gov/dockets/commenting-epa-dockets.*

Out of an abundance of caution for members of the public and our staff, the EPA Docket Center and Reading Room was closed to public visitors on March 31, 2020, to reduce the risk of transmitting COVID–19. Our Docket Center staff will continue to provide remote customer service via email, phone, and webform. We encourage the public to submit comments via *https://regulations.gov,* as there is a temporary suspension of mail delivery to the EPA, and no hand deliveries are currently accepted. For further information on the EPA Docket Center services and the current status, please visit us online at *https://www.epa.gov/dockets.*

FOR FURTHER INFORMATION CONTACT: Lester Yuan, Health and Ecological Criteria Division, Office of Water (Mail Code 4304T), Environmental Protection Agency, 1200 Pennsylvania Avenue NW, Washington, DC 20460; telephone number: (202) 566–0908; email address: *yuan.lester@epa.gov.*

SUPPLEMENTARY INFORMATION:

I. General Information

A. How can I get copies of this document and other related information?

You may access this **Federal Register** document electronically from the Government Printing Office under the ''**Federal Register**'' listings in govinfo (*https://www.govinfo.gov/app/collection/FR/*).

II. What is nutrient pollution and why is the EPA concerned about it?

While certain levels of nutrients are essential for healthy aquatic ecosystems, nutrient pollution, or the excess loading of nitrogen and phosphorus, can degrade the conditions of water bodies and potentially make them unsafe for aquatic life, recreation, or to use as drinking water sources. Nutrient pollution stimulates excess growth of algae, which can limit the recreational use of lakes and reservoirs. Overabundant algae also increase the amount of organic matter in a lake or reservoir, which, when decomposed, can depress dissolved oxygen concentrations below levels needed to sustain aquatic life. In extreme cases, the depletion of dissolved oxygen causes fish kills. Nutrient pollution can stimulate the excess growth of nuisance algae, such as cyanobacteria, which can produce cyanotoxins that are toxic to animals and humans. Elevated concentrations of these cyanotoxins can reduce the suitability of a lake or reservoir for recreation and as a source of drinking water.

III. Information on the Draft Ambient Water Quality Criteria Recommendations for Lakes and Reservoirs

These draft ambient water quality criteria recommendations for lakes and reservoirs are part of the EPA's ongoing efforts to support states and authorized tribes in developing and adopting numeric nutrient criteria. Numeric nutrient criteria provide an important tool for managing the effects of nutrient pollution by providing nutrient goals that support the protection and maintenance of the designated uses of the waters of the United States. Recognizing the utility of such criteria, the EPA published recommended numeric nutrient criteria for lakes and reservoirs for twelve out of fourteen ecoregions of the conterminous United States from 2000 to 2001. These criteria were derived by analyzing available data on the concentrations of total nitrogen, total phosphorus, chlorophyll *a*, and Secchi depth. Scientific understanding of the relationships between nutrient concentrations and deleterious effects in lakes has increased since 2001, and standardized, high-quality data collected from lakes across the United States have become available. In this document, the EPA describes analyses of these new data and provides models to derive draft numeric nutrient criteria for lakes that

replace the recommended numeric nutrient criteria of 2000 and 2001. These draft models and associated recommended criteria are provided in accordance with the provisions of Section 304(a) of the CWA for the EPA to revise ambient water quality criteria from time to time to reflect the latest scientific knowledge. CWA Section 304(a) national water quality criteria serve only as non-binding recommendations to states and authorized tribes in defining ambient water concentrations that will protect against adverse effects to aquatic life and human health. The ecological responses on which these draft models and criteria are based were selected by applying a risk assessment approach to explicitly link nutrient concentrations to the protection of designated uses.

The draft ambient water quality criteria recommendations for lakes and reservoirs are based on the available data from the EPA's National Lakes Assessment (NLA) survey. The NLA surveys are carried out under the EPA's National Aquatic Resource Survey program, which conducts water quality and biological surveys of the Nation's surface waters in partnerships with state and authorized tribal water quality monitoring programs (*https://www.epa.gov/national-aquatic-resource-surveys*). The NLA surveys were designed using random sampling of lakes and reservoirs across the United States, and as a result, the data generated represent the characteristics of the full population of United States lakes and reservoirs. The NLA surveys were implemented using standardized field sampling and analytical methods, with internal oversight and independent quality control surveillance yielding data of high quality and statistical rigor.

The stressor-response models used in generating the draft ambient water quality criteria recommendations are based on previously published EPA technical guidance (U.S. EPA 2010, *Using stressor-response relationships to derive numeric nutrient criteria,* Office of Water, U.S. Environmental Protection Agency, Washington, DC, EPA–820–S–10–001), as well as scientific peer-reviewed statistical and modeling techniques. Models provided in the draft recommended criteria document are based on national data, but states and authorized tribes may have additional data collected during routine monitoring. Incorporating these local data into the national models can refine and improve the precision of the estimates of the stressor-response relationships. In the appendices of the draft criteria document, the EPA describes case studies in which state monitoring data have been combined with national data, yielding models that can be used to derive numeric nutrient criteria that account for both unique local conditions and national, large-scale trends.

IV. What are CWA Section 304(a) recommended water quality criteria?

CWA Section 304(a) water quality criteria are non-binding recommendations developed by the EPA under authority of Section 304(a) of the CWA based on the latest scientific information on the effect that pollutant concentrations have on aquatic species, recreation, and/or human health.

Section 304(a)(1) of the CWA directs the EPA to develop, publish, and, from time to time, revise criteria for water quality accurately reflecting the latest scientific knowledge. Water quality criteria developed under CWA Section 304(a) are based on data and scientific judgments on the relationship between pollutant concentrations and environmental and human health effects. CWA Section 304(a) recommended criteria do not reflect consideration of economic impacts or the technological feasibility of meeting pollutant concentrations in ambient water.

CWA Section 304(a) recommended criteria provide non-binding guidance to states and authorized tribes in adopting water quality standards that ultimately provide a basis for controlling discharges of pollutants. Under the CWA and its implementing regulations, states and authorized tribes are to adopt water quality criteria to protect designated uses (*e.g.,* aquatic life, recreational use). The EPA's water quality criteria recommendations are not regulations and do not constitute legally binding requirements. States and authorized tribes may adopt other scientifically defensible water quality criteria that differ from these recommendations. The CWA and its implementing regulations require that any new or revised water quality standards adopted by the states and authorized tribes be scientifically defensible and protective of the designated uses of the bodies of water. States and authorized tribes have the flexibility to do this by adopting criteria based on (1) the EPA's recommended criteria, (2) the EPA's criteria modified to reflect site-specific conditions, or (3) other scientifically defensible methods.

V. Use of the Ambient Water Quality Criteria Recommendations for Lakes and Reservoirs by States and Authorized Tribes

The EPA is publishing the draft ambient water quality criteria recommendations for lakes and reservoirs for consideration by states and authorized tribes as they develop numeric nutrient criteria to protect aquatic life, recreation, and drinking water sources from nutrient pollution. States and authorized tribes could consider using the recommendations, once final, as an alternative to or as a supplement of other water quality data and scientifically defensible approaches. States and authorized tribes may also modify the criteria to reflect site-specific conditions or establish criteria based on other scientifically defensible methods (40 CFR 131.11(b)). When finalized, these updated CWA Section 304(a) recommended nutrient criteria for lakes do not compel a state or authorized tribe to revise current EPA approved and adopted criteria, Total Maximum Daily Load nutrient load targets, or nitrogen or phosphorus numeric values established by other scientifically defensible methods. As part of their triennial review, if a state or authorized tribe uses its discretion to not adopt new or revised nutrient criteria based on these CWA Section 304(a) criteria models, then the state or authorized tribe shall provide an explanation when it submits the results of its triennial review (40 CFR 131.20(a)).

VI. Solicitation of Scientific Views

The EPA is soliciting public comment, including, but not limited to, additional scientific views, data, and information, regarding the science and technical approach used in the derivation of these draft ambient water quality criteria recommendations for lakes and reservoirs.

David P. Ross,

Assistant Administrator, Office of Water.

[FR Doc. 2020–11126 Filed 5–21–20; 8:45 am]

BILLING CODE 6560–50–P

ENVIRONMENTAL PROTECTION AGENCY

[EPA–HQ–OGC–2020–0020; FRL–10009–37–OMS]

Information Collection Request Submitted to OMB for Review and Approval; Comment Request; Confidentiality Rules (Renewal)

AGENCY: Environmental Protection Agency (EPA).

ACTION: Notice.

SUMMARY: The Environmental Protection Agency (EPA) has submitted an information collection request (ICR), Confidentiality Rules (EPA ICR Number 1665.14, OMB Control Number 2020–0003) to the Office of Management and Budget (OMB) for review and approval in accordance with the Paperwork Reduction Act. This is a proposed extension of the ICR, which is currently approved through May 31, 2020. Public comments were previously requested via the **Federal Register** on January 23, 2020 during a 60-day comment period. This notice allows for an additional 30 days for public comments. A fuller description of the ICR is given below, including its estimated burden and cost to the public. An agency may not conduct or sponsor, and a person is not required to respond to, a collection of information unless it displays a currently valid OMB control number.

DATES: Additional comments may be submitted on or before June 22, 2020.

ADDRESSES: Submit your comments, referencing Docket ID Number EPA–HQ–OGC–2020–0020, to (1) EPA online using *www.regulations.gov* (our preferred method) or *hq.foia@epa.gov.* EPA's policy is that all comments received will be included in the public docket without change including any personal information provided, unless the comment includes profanity, threats, information claimed to be Confidential Business Information (CBI), or other information whose disclosure is restricted by statute.

Submit written comments and recommendations to OMB for the proposed information collection within 30 days of publication of this notice to *www.reginfo.gov/public/do/PRAMain.* Find this particular information collection by selecting ''Currently under 30-day Review—Open for Public Comments'' or by using the search function.

FOR FURTHER INFORMATION CONTACT: Christopher T. Creech, National FOIA Office, Office of General Counsel, Environmental Protection Agency; telephone number: 202–564–4286; email address: *creech.christopher@epa.gov.*

SUPPLEMENTARY INFORMATION: Supporting documents, which explain in detail the information that the EPA will be collecting, are available in the public docket for this ICR. The docket can be viewed online at *www.regulations.gov.* The telephone number for the Docket Center is 202–566–1744. For additional information about EPA's public docket, visit *http://www.epa.gov/dockets.*

Abstract: The U.S. Environmental Protection Agency (EPA or Agency) established the requirements set forth in 40 CFR 2.201 *et seq.* ''Confidentiality of Business Information'' to establish rules to govern claims of confidential business information (CBI), *i.e.,* the rules governing the handling by the Agency of business information which is or may be entitled to confidential treatment, determining whether such information is entitled to confidential treatment for reasons of business confidentiality and responding to Freedom of Information Act (FOIA) requests pursuant to 5 U.S.C. 552 for this information.

Form Numbers: None.

Respondents/affected entities: Respondents can potentially include any business that submitted to EPA information that may be claimed as CBI. Respondents can be entities in both the manufacturing (SIC codes 20–30) and non-manufacturing sectors (no SIC codes identified).

Respondent's obligation to respond: Voluntary and mandatory.

Estimated number of respondents: 198 (total).

Frequency of response: 1 response per respondent annually.

Total estimated burden: 752.4 hours (per year). Burden is defined at 5 CFR 1320.03(b).

Total estimated cost: $169,290.00 (per year), includes $0 annualized capital or operation & maintenance costs.

Changes in the Estimates: The revised requests for substantiation will decrease the estimated burden hours for each response, although it increases the total estimated respondent burden compared with the ICR currently approved by OMB. The decrease is 2 hours for each business response; the increase is based on an expected higher response rate under the new form, producing an increase from 488 hours to 752 hours total. This decrease of hours spent are due to the removal of a question that required a company to describe, with specificity, the ''substantial competitive harm'' that would occur as a direct result of disclosing the information.

EPA modified its substantiation questions because of the U.S. Supreme Court's decision in *Food Marketing Institute* v. *Argus Leader Media* (*Argus*), 139 S. Ct. 2356 (2019), which evaluated the definition of ''confidential'' as used in Exemption 4 of the FOIA. 5 U.S.C. 552(b)(4). In the *Argus* decision, the Court held that at least where ''[1] commercial or financial information is both customarily and actually treated as private by its owner and [2] provided to the government under an assurance of privacy, the information is 'confidential' within the meaning of Exemption 4.'' *Argus,* 139 S. Ct. at 2366. EPA has reduced burdens to business submitters by removing the requirement to explain with specificity whatever ''substantial competitive harm'' a submitter claims would ensue from release of each CBI claim. The evaluation of ''substantial competitive harm'' had required businesses to analyze and describe the potential impacts of release. EPA has replaced that question with modified questions that require a factual description of the submitter's handling and treatment of the CBI-claimed information, as well as a description of any assurances provided by EPA at the time of submission. This replacement will reduce the burden on companies since evaluation and analysis of ''substantial competitive harm'' is no longer required. Further, EPA reframed preexisting questions to solicit ''yes'' or ''no'' responses, which further reduces burdens on submitters. These modifications will result in greater clarity to business submitters and improved responses as the Agency completes its confidentiality determinations.

The Agency anticipates that this lower burden on each response will increase the response rate from 21% in the prior analysis to 66% in the present analysis. EPA has already experienced an increase in response rate because of the Supreme Court's decision and expects this change to continue under the new form. EPA also made other adjustments in its analysis including adjustments in the hourly costs for both the Agency and responding companies as well as removing a category of burden that was not relevant to EPA's information request.

Courtney Kerwin,

Director, Regulatory Support Division.

[FR Doc. 2020–11067 Filed 5–21–20; 8:45 am]

BILLING CODE 6560–50–P

ENVIRONMENTAL PROTECTION AGENCY

[EPA–HQ–OPP–2019–0356; FRL–10005–96–OMS]

Information Collection Request Submitted to OMB for Review and Approval; Comment Request; School Integrated Pest Management Awards Program (Renewal)

AGENCY: Environmental Protection Agency (EPA).

ACTION: Notice.

SUMMARY: The Environmental Protection Agency (EPA) has submitted an information collection request (ICR), School Integrated Pest Management Awards Program (EPA ICR Number 2531.02, OMB Control Number 2070–0200) to the Office of Management and Budget (OMB) for review and approval in accordance with the Paperwork Reduction Act. This is a proposed extension of the ICR, which is currently approved through May 31, 2020. This notice allows for an additional 30 days for public comments. A fuller description of the ICR is given below, including its estimated burden and cost to the public. An agency may not conduct or sponsor and a person is not required to respond to a collection of information unless it displays a currently valid OMB control number.

DATES: Comments must be received on or before June 22, 2020.

ADDRESSES: Submit your comments to EPA, referencing Docket ID No. EPA–HQ–OPP–2019–0356, online using *www.regulations.gov* (our preferred method) or by mail to: EPA Docket Center, Environmental Protection Agency, Mail Code 28221T, 1200 Pennsylvania Ave. NW, Washington, DC 20460. EPA's policy is that all comments received will be included in the public docket without change including any personal information provided, unless the comment includes profanity, threats, information claimed to be Confidential Business Information (CBI), or other information whose disclosure is restricted by statute.

Submit written comments and recommendations to OMB for the proposed information collection within 30 days of publication of this notice to *www.reginfo.gov/public/do/PRAMain.* Find this particular information collection by selecting ''Currently under 30-day Review—Open for Public Comments'' or by using the search function.

FOR FURTHER INFORMATION CONTACT: Carolyn Siu, Field External Affairs Division (7506P), Office of Pesticide Programs, Environmental Protection Agency, 1200 Pennsylvania Ave. NW, Washington, DC 20460–0001; telephone number: (703) 347–0159; email address: *siu.carolyn@epa.gov.*

SUPPLEMENTARY INFORMATION: Supporting documents, which explain in detail the information that the EPA will be collecting, are available in the public docket for this ICR. The docket can be viewed online at *http://www.regulations.gov* or in person at the EPA Docket Center, West William Jefferson Clinton Bldg., Rm. 3334, 1301 Constitution Ave. NW, Washington, DC. The telephone number for the Docket Center is (202) 566–1744. For additional information about EPA's public docket, visit *http://www.epa.gov/dockets.*

Abstract: This is a renewal information collection request (ICR) that will cover the paperwork activities associated with the U.S. Environmental Protection Agency's program to encourage the use of Integrated Pest Management (IPM) as the preferred approach to pest control in the nation's schools. IPM is a smart, sensible, and sustainable approach to pest control that emphasizes the remediation of pest conducive conditions. IPM combines a variety of pest management practices to provide effective, economical pest control with the least possible hazard to people, property, and the environment. These practices involve exclusion of pests, maintenance of sanitation, and the judicious use of pesticides.

The EPA's vision is that all students in the U.S. will experience the benefits provided by an IPM program in their school district. The Agency's IPM implementation efforts are aimed at kindergarten through 12th grade public and Tribal schools. The Agency intends to use the information collected through this ICR to encourage school districts to implement IPM programs and to recognize those that have attained a notable level of success. Since IPM implementation occurs along a continuum, the School IPM (SIPM) Awards program will recognize each milestone a school district must take to begin, grow, and sustain an IPM program.

This program has five award categories—Great Start, Leadership, Excellence, Sustained Excellence, and Connector. The first four categories are stepwise levels that are reflective of the effort, experience, and, ultimately, success that results from implementing EPA-recommended IPM tactics that protect human health and the environment. Schools with pest infestations are not only exposed to potential harm to health and property, but also to stigmatization. The SIPM Awards program will give districts across the nation the opportunity to receive positive reinforcement through public recognition of their efforts in implementing pest prevention and management strategies.

Respondents/Affected Entities: Entities potentially affected by this ICR are school districts or entities that represent them. North American Industry Classification System (NACIS) Codes for these respondents include: 6111—Elementary and Secondary Schools, 6244—Child Day Care Services, 56172—Janitorial Services, 56173—Landscaping Services, 56171—Exterminating and Pest Control Services, and 5617—Services to Buildings and Dwellings.

Respondent's obligation to respond: Voluntary, required to obtain or retain a benefit.

Estimated total number of potential respondents: 53.

Frequency of response: On occasion.

Estimated total burden: 911 hours (per year). Burden is defined at 5 CFR 1320.3(b).

Estimated total costs: $ 85,404 (per year) includes $0 in annualized capital or operation & maintenance costs.

Changes in the estimates: There is an increase of 52 hours in the total estimated respondent burden compared with that identified in the ICR currently approved by OMB. EPA's costs associated with information collection increased for both the respondents and the Agency due to the increases in the wage rates since its creation. We note that in the original ICR, the benefits (46.3 percent of the unloaded wage) were mistakenly excluded from the calculation of the fully loaded wages for the Agency, resulting in the latter being much lower than the actual values. This led to the cost increase for the Agency disproportionately larger than the cost increase for the respondents. This change is an adjustment.

Courtney Kerwin,

Director, Regulatory Support Division.

[FR Doc. 2020–11068 Filed 5–21–20; 8:45 am]

BILLING CODE 6560–50–P

FEDERAL TRADE COMMISSION

[File No. 192 3129]

Miniclip S.A.; Analysis To Aid Public Comment

AGENCY: Federal Trade Commission.

ACTION: Proposed consent agreement; request for comment.

SUMMARY: The consent agreement in this matter settles alleged violations of federal law prohibiting unfair or deceptive acts or practices. The attached Analysis to Aid Public Comment describes both the allegations in the complaint and the terms of the consent order—embodied in the consent agreement—that would settle these allegations.

DATES: Comments must be received on or before June 22, 2020.

ADDRESSES: Interested parties may file comments online or on paper by following the instructions in the Request for Comment part of the

SUPPLEMENTARY INFORMATION section below. Write ''Miniclip S.A.; File No. 192 3129'' on your comment, and file your comment online at *https://www.regulations.gov* by following the instructions on the web-based form. If you prefer to file your comment on paper, mail your comment to the following address: Federal Trade Commission, Office of the Secretary, 600 Pennsylvania Avenue NW, Suite CC–5610 (Annex D), Washington, DC 20580, or deliver your comment to the following address: Federal Trade Commission, Office of the Secretary, Constitution Center, 400 7th Street SW, 5th Floor, Suite 5610 (Annex D), Washington, DC 20024.

FOR FURTHER INFORMATION CONTACT: Ryan Mehm (202–326–2918), Bureau of Consumer Protection, Federal Trade Commission, 600 Pennsylvania Avenue NW, Washington, DC 20580.

SUPPLEMENTARY INFORMATION: Pursuant to Section 6(f) of the Federal Trade Commission Act, 15 U.S.C. 46(f), and FTC Rule 2.34, 16 CFR 2.34, notice is hereby given that the above-captioned consent agreement containing a consent order to cease and desist, having been filed with and accepted, subject to final approval, by the Commission, has been placed on the public record for a period of thirty (30) days. The following Analysis to Aid Public Comment describes the terms of the consent agreement and the allegations in the complaint. An electronic copy of the full text of the consent agreement package can be obtained from the FTC Website (for May 19, 2020), at this web address: *https://www.ftc.gov/news-events/commission-actions.*

You can file a comment online or on paper. For the Commission to consider your comment, we must receive it on or before June 22, 2020. Write ''Miniclip S.A.; File No. 192 3129'' on your comment. Your comment—including your name and your state—will be placed on the public record of this proceeding, including, to the extent practicable, on the *https://www.regulations.gov* website.

Due to the public health emergency in response to the COVID–19 outbreak and the agency's heightened security screening, postal mail addressed to the Commission will be subject to delay. We strongly encourage you to submit your comments online through the *https://www.regulations.gov* website.

If you prefer to file your comment on paper, write ''Miniclip S.A.; File No. 192 3129'' on your comment and on the envelope, and mail your comment to the following address: Federal Trade Commission, Office of the Secretary, 600 Pennsylvania Avenue NW, Suite CC–5610 (Annex D), Washington, DC 20580; or deliver your comment to the following address: Federal Trade Commission, Office of the Secretary, Constitution Center, 400 7th Street SW, 5th Floor, Suite 5610 (Annex D), Washington, DC 20024. If possible, submit your paper comment to the Commission by courier or overnight service.

Because your comment will be placed on the publicly accessible website at *https://www.regulations.gov,* you are solely responsible for making sure your comment does not include any sensitive or confidential information. In particular, your comment should not include any sensitive personal information, such as your or anyone else's Social Security number; date of birth; driver's license number or other state identification number, or foreign country equivalent; passport number; financial account number; or credit or debit card number. You are also solely responsible for making sure your comment does not include sensitive health information, such as medical records or other individually identifiable health information. In addition, your comment should not include any ''trade secret or any commercial or financial information which . . . is privileged or confidential''—as provided by Section 6(f) of the FTC Act, 15 U.S.C. 46(f), and FTC Rule 4.10(a)(2), 16 CFR 4.10(a)(2)—including in particular competitively sensitive information such as costs, sales statistics, inventories, formulas, patterns, devices, manufacturing processes, or customer names.

Comments containing material for which confidential treatment is requested must be filed in paper form, must be clearly labeled ''Confidential,'' and must comply with FTC Rule 4.9(c). In particular, the written request for confidential treatment that accompanies the comment must include the factual and legal basis for the request, and must identify the specific portions of the comment to be withheld from the public record. *See* FTC Rule 4.9(c). Your comment will be kept confidential only if the General Counsel grants your request in accordance with the law and the public interest. Once your comment has been posted on the public FTC website—as legally required by FTC Rule 4.9(b)—we cannot redact or remove your comment from the FTC Website, unless you submit a confidentiality request that meets the requirements for such treatment under FTC Rule 4.9(c), and the General Counsel grants that request.

Visit the FTC website at *http://www.ftc.gov* to read this Notice and the news release describing the proposed settlement. The FTC Act and other laws that the Commission administers permit the collection of public comments to consider and use in this proceeding, as appropriate. The Commission will consider all timely and responsive public comments that it receives on or before June 22, 2020. For information on the Commission's privacy policy, including routine uses permitted by the Privacy Act, see *https://www.ftc.gov/site-information/privacy-policy.*

Analysis of Proposed Consent Order To Aid Public Comment

The Federal Trade Commission (''Commission'') has accepted, subject to final approval, an agreement containing a consent order from Miniclip S.A. (''Respondent''). The proposed consent order (''proposed order'') has been placed on the public record for thirty (30) days for receipt of comments from interested persons. Comments received during this period will become part of the public record. After thirty (30) days, the Commission will again review the agreement and the comments received, and will decide whether it should withdraw from the agreement and take appropriate action or make final the agreement's proposed order.

Respondent develops, publishes, and distributes mobile and online digital games. As of August 2019, Respondent had approximately 100 applications (''apps'') available for download through Apple's App Store and Google Play. Consumers can also play online games via Respondent's website, *www.miniclip.com,* and through Facebook.

This matter concerns alleged false or misleading representations that Respondent made concerning its status in a Children's Online Privacy Protection Act of 1998 (''COPPA'') safe harbor program. Congress enacted COPPA to protect the safety and privacy of children online by prohibiting the unauthorized or unnecessary collection of children's personal information online by operators of Internet Websites and online services. COPPA directed the Commission to promulgate a rule implementing COPPA. The Commission promulgated the COPPA Rule on November 3, 1999, and the COPPA Rule went into effect on April 21, 2000. The Commission promulgated revisions to the Rule that went into effect on July 1, 2013. COPPA includes a provision enabling industry groups or others to submit for Commission approval self-regulatory safe harbor programs that

implement the protections of the Commission's final Rule.

In 2001, the Commission approved the Children's Advertising Review Unit (''CARU'') as a COPPA safe harbor program. In July 2009, Respondent joined CARU's COPPA safe harbor program. Thereafter, Respondent began disseminating statements regarding its participation in CARU's COPPA safe harbor program. Respondent remained a member of CARU's COPPA Safe Harbor Program until July 6, 2015, when CARU terminated Respondent's participation in the program. After CARU terminated Respondent from its safe harbor program, Respondent continued to make claims that it participated in the program.

The Commission's proposed one-count complaint alleges that Respondent violated Section 5(a) of the Federal Trade Commission Act. Specifically, the proposed complaint alleges that Respondent engaged in a deceptive act or practice by falsely representing that it was a current participant in the CARU COPPA safe harbor program when it was not.

Part I of the proposed order prohibits Respondent from making misrepresentations about its membership in any privacy or security program sponsored by the government or any other self-regulatory or standard-setting organization, including, but not limited to, the CARU COPPA safe harbor.

Parts II through V of the proposed order are reporting and compliance provisions. Part II requires acknowledgement of the order and dissemination of the order now and in the future to persons with responsibilities relating to the subject matter of the order. Part III ensures notification to the FTC of changes in corporate status and mandates that the company submit an initial compliance report to the FTC. Part IV requires the company to create certain documents relating to its compliance with the order for ten (10) years and to retain those documents for a five-year period. Part V mandates that the company make available to the FTC information or subsequent compliance reports, as requested.

Part VI is a provision ''sun-setting'' the order after twenty (20) years, with certain exceptions.

The purpose of this analysis is to aid public comment on the proposed order. It is not intended to constitute an official interpretation of the complaint or proposed order, or to modify in any way the proposed order's terms.

By direction of the Commission.

April J. Tabor,

Acting Secretary.

[FR Doc. 2020–11098 Filed 5–21–20; 8:45 am]

BILLING CODE 6750–01–P

DEPARTMENT OF HEALTH AND HUMAN SERVICES

Administration for Community Living

Availability of Program Application Instructions for Medicare Improvements for Patients and Providers Act (MIPPA) Program Funds

AGENCY: Administration for Community Living, HHS.

ACTION: Notice

SUMMARY: The purpose of MIPPA funding is to enhance statewide and local coalition building focused on outreach, education, and one-to-one assistance activities to Medicare beneficiaries likely to be eligible for the Low Income Subsidy program (LIS) or the Medicare Savings Programs (MSP), above and beyond those regular activities planned in response to other funding. ACL will provide funding to State Health Insurance Assistance Programs (SHIP), Area Agencies on Aging (AAA), and Aging and Disability Resource Center (ADRC).

ACL seeks plans from applicants that will describe how the MIPPA funds will be used for outreach, education, and one-on-one application assistance over the next year. ACL requests that applicants submit a one (1) year state plan with specific project strategies to:

1. Enhance their one-on-one assistance, education, and outreach efforts to eligible Medicare beneficiaries regarding their preventive, wellness, and limited income benefits;
2. Describe how the SHIP, AAA, and ADRC efforts will be coordinated to provide outreach to beneficiaries with limited incomes statewide including rural areas and tribal entities;
3. Review and update previous MIPPA plans to reflect successes achieved to date and direct their efforts to enhance and expand their MIPPA outreach activities; and
4. Set performance goals, taking into account the MIPPA Performance Measures (PMs) implemented in Grant Year 2019 [Performance Measures include: Overall MIPPA Contacts; Overall Persons Reached through Outreach; MIPPA Target Populations (Under 65, Rural, Native American, English as a Secondary Language); and Contacts with Applications Submitted].

Additionally, programs should ensure MIPPA counselors familiarity with integrated care programs that support beneficiaries' independence at home and in the community, including Programs of All-Inclusive Care for the Elderly, Medicare Advantage Special Needs Plans and Supplemental benefits, and other integrated care programs for Medicare and Medicaid dual eligible beneficiaries. Applicant plans should go above and beyond those regular activities planned in response to other funding. State agencies may prepare either one statewide plan or separate plans for each eligible agency.

Announcement Type: Initial.

Funding Opportunity Number: CIP–MI–20–001.

Statutory Authority: The statutory authority for grants under this program announcement is contained in the 2006 Reauthorization of the Older Americans Act—Section 202 and the Medicare Improvements for Patients and Providers Act of 2008—Section 119, Public Law (Pub. L.) 110–275 as amended by the Patient Protection and Affordable Care Act of 2010 (Affordable Care Act), reauthorized by the American Taxpayer Relief Act of 2012 (ATRA), the Protecting Access to Medicare Act of 2014, and the Medicare Access and CHIP Reauthorization Act of 2015 (MACRA), the Bipartisan Budget Act of 2018, and the Coronavirus Aid, Relief, and Economic Security (CARES) Act of 2020.

Catalog of Federal Domestic Assistance (CFDA) Number: 93.071.

DATES: The deadline date for the submission of MIPPA Program State Plans is 11:59 p.m. EST July 20, 2020.

I. Award Information

1. Funding Instrument Type

These awards will be made in the form of grants to agencies for each MIPPA Priority Area:

Priority Area 1—Grants to state agencies (State Units on Aging or State Departments of Insurance) that administer the SHIP to provide enhanced outreach to eligible Medicare beneficiaries regarding their preventive, wellness, and limited income benefits; application assistance to individuals who may be eligible for LIS or MSPs; and outreach activities aimed at preventing disease and promoting wellness.

Priority Area 2—Grants to state agencies for AAA and Native American programs to provide enhanced outreach to eligible Medicare beneficiaries regarding their preventive, wellness, and limited income benefits; application assistance to individuals who may be eligible for LIS or MSPs; and outreach

activities aimed at preventing disease and promoting wellness.

Priority Area 3—Grants to agencies that are established ADRCs who have received an ADRC/No Wrong Door System (NWD) grant to provide outreach regarding Medicare Part D benefits related to LIS and MSPs, and conduct outreach activities aimed at preventing disease and promoting wellness.

2. Anticipated Total Priority Area Funding per Budget Period

ACL intends to make available, under this program announcement, grant awards for the three MIPPA priority areas. Funding will be distributed through a formula as identified in statute. The amounts allocated are based upon factors defined in statute and will be distributed to each priority area based on the formula. ACL will fund total project periods of up to one (1) year contingent upon availability of federal funds.

Priority Area 1—SHIP: $12.4 million in FY 2020 for state agencies that administer the SHIP Program.

Priority Area 2—AAA: $7.1 million in FY 2020 for State Units on Aging for Area Agencies on Aging and for Native American programs. Funding for Native American Programs ($285,000) is deducted from Priority 2 and is being allocated through a separate process.

Priority Area 3—ADRC: $4.7 million in FY 2020 for agencies that are established ADRCs who have received an ADRC/NWD grant.

II. Eligibility Criteria and Other Requirements

1. Eligible Applicants for MIPPA Priority Areas 1, 2 and 3

Priority Area 1: Only existing SHIP grant recipients are eligible to apply.

Priority Area 2: Only State Units on Aging are eligible to apply.

Priority Area 3: Only agencies that are established ADRCs who have received an Aging and Disability Resource Center (ADRC)/No Wrong Door System (NWD) grant.

Eligibility may change if future funding is available.

2. Cost Sharing or Matching is not Required

3. DUNS Number

All grant applicants must obtain and keep current a D–U–N–S number from Dun and Bradstreet. It is a nine-digit identification number, which provides unique identifiers of single business entities. The D–U–N–S number can be obtained from: *https://iupdate.dnb.com/iUpdate/viewiUpdateHome.htm.*

4. Intergovernmental Review

Executive Order 12372, Intergovernmental Review of Federal Programs, is not applicable to these grant applications.

III. Submission Information

1. Application Kits

Application Kits/Program Instructions are available at *www.grantsolutions.gov.* Instructions for completing the application kit will be available on the site.

2. Submission Dates and Times

To receive consideration, applications must be submitted by 11:59 p.m. Eastern Time on July 20, 2020, through *www.GrantSolutions.gov.*

VI. Agency Contacts

Direct inquiries regarding programmatic issues to:

Margaret Flowers, Phone: 202.795.7315, Email: *Margaret.Flowers@acl.hhs.gov.*

Dated: May 14, 2020.

Mary Lazare,

Principal Deputy Administrator.

[FR Doc. 2020–11050 Filed 5–21–20; 8:45 am]

BILLING CODE 4154–01–P

DEPARTMENT OF HEALTH AND HUMAN SERVICES

Food and Drug Administration

[Docket No. FDA–2017–N–1064]

Agency Information Collection Activities; Proposed Collection; Comment Request; State Petitions for Exemption From Preemption

AGENCY: Food and Drug Administration, HHS.

ACTION: Notice.

SUMMARY: The Food and Drug Administration (FDA or Agency) is announcing an opportunity for public comment on the proposed collection of certain information by the Agency. Under the Paperwork Reduction Act of 1995 (PRA), Federal Agencies are required to publish notice in the **Federal Register** concerning each proposed collection of information, including each proposed extension of an existing collection of information, and to allow 60 days for public comment in response to the notice. This notice solicits comments on the information collection provisions of our reporting requirements contained in existing FDA regulations governing state petitions for exemption from preemption.

DATES: Submit either electronic or written comments on the collection of information by July 21, 2020.

ADDRESSES: You may submit comments as follows. Please note that late, untimely filed comments will not be considered. Electronic comments must be submitted on or before July 21, 2020. The *https://www.regulations.gov* electronic filing system will accept comments until 11:59 p.m. Eastern Time at the end of July 21, 2020. Comments received by mail/hand delivery/courier (for written/paper submissions) will be considered timely if they are postmarked or the delivery service acceptance receipt is on or before that date.

Electronic Submissions

Submit electronic comments in the following way:

- *Federal eRulemaking Portal: https://www.regulations.gov.* Follow the instructions for submitting comments. Comments submitted electronically, including attachments, to *https://www.regulations.gov* will be posted to the docket unchanged. Because your comment will be made public, you are solely responsible for ensuring that your comment does not include any confidential information that you or a third party may not wish to be posted, such as medical information, your or anyone else's Social Security number, or confidential business information, such as a manufacturing process. Please note that if you include your name, contact information, or other information that identifies you in the body of your comments, that information will be posted on *https://www.regulations.gov.*
- If you want to submit a comment with confidential information that you do not wish to be made available to the public, submit the comment as a written/paper submission and in the manner detailed (see ''Written/Paper Submissions'' and ''Instructions'').

Written/Paper Submissions

Submit written/paper submissions as follows:

- *Mail/Hand Delivery/Courier (for written/paper submissions):* Dockets Management Staff (HFA–305), Food and Drug Administration, 5630 Fishers Lane, Rm. 1061, Rockville, MD 20852.
- For written/paper comments submitted to the Dockets Management Staff, FDA will post your comment, as well as any attachments, except for information submitted, marked and identified, as confidential, if submitted as detailed in ''Instructions.''

Instructions: All submissions received must include the Docket No. FDA–2017–N–1064 for ''Agency Information

Collection Activities; Proposed Collection; Comment Request; State Petitions for Exemption from Preemption.'' Received comments, those filed in a timely manner (see **ADDRESSES**), will be placed in the docket and, except for those submitted as ''Confidential Submissions,'' publicly viewable at *https://www.regulations.gov* or at the Dockets Management Staff between 9 a.m. and 4 p.m., Monday through Friday.

• Confidential Submissions—To submit a comment with confidential information that you do not wish to be made publicly available, submit your comments only as a written/paper submission. You should submit two copies total. One copy will include the information you claim to be confidential with a heading or cover note that states ''THIS DOCUMENT CONTAINS CONFIDENTIAL INFORMATION.'' The Agency will review this copy, including the claimed confidential information, in its consideration of comments. The second copy, which will have the claimed confidential information redacted/blacked out, will be available for public viewing and posted on *https://www.regulations.gov.* Submit both copies to the Dockets Management Staff. If you do not wish your name and contact information to be made publicly available, you can provide this information on the cover sheet and not in the body of your comments and you must identify this information as ''confidential.'' Any information marked as ''confidential'' will not be disclosed except in accordance with 21 CFR 10.20 and other applicable disclosure law. For more information about FDA's posting of comments to public dockets, see 80 FR 56469, September 18, 2015, or access the information at: *https://www.govinfo.gov/content/pkg/FR-2015-09-18/pdf/2015-23389.pdf.*

Docket: For access to the docket to read background documents or the electronic and written/paper comments received, go to *https://www.regulations.gov* and insert the docket number, found in brackets in the heading of this document, into the ''Search'' box and follow the prompts and/or go to the Dockets Management Staff, 5630 Fishers Lane, Rm. 1061, Rockville, MD 20852.

FOR FURTHER INFORMATION CONTACT: Ila S. Mizrachi, Office of Operations, Food and Drug Administration, Three White Flint North, 10A–12M, 11601 Landsdown St., North Bethesda, MD 20852, 301–796–7726, *PRAStaff@fda.hhs.gov.*

SUPPLEMENTARY INFORMATION: Under the PRA (44 U.S.C. 3501–3521), Federal Agencies must obtain approval from the Office of Management and Budget (OMB) for each collection of information they conduct or sponsor. ''Collection of information'' is defined in 44 U.S.C. 3502(3) and 5 CFR 1320.3(c) and includes Agency requests or requirements that members of the public submit reports, keep records, or provide information to a third party. Section 3506(c)(2)(A) of the PRA (44 U.S.C. 3506(c)(2)(A)) requires Federal Agencies to provide a 60-day notice in the **Federal Register** concerning each proposed collection of information, including each proposed extension of an existing collection of information, before submitting the collection to OMB for approval. To comply with this requirement, FDA is publishing notice of the proposed collection of information set forth in this document.

With respect to the following collection of information, FDA invites comments on these topics: (1) Whether the proposed collection of information is necessary for the proper performance of FDA's functions, including whether the information will have practical utility; (2) the accuracy of FDA's estimate of the burden of the proposed collection of information, including the validity of the methodology and assumptions used; (3) ways to enhance the quality, utility, and clarity of the information to be collected; and (4) ways to minimize the burden of the collection of information on respondents, including through the use of automated collection techniques, when appropriate, and other forms of information technology.

State Petitions for Exemption From Preemption—21 CFR 100.1(d)

OMB Control Number 0910–0277—Extension

Under section 403A(b) of the Federal Food, Drug, and Cosmetic Act (FD&C Act) (21 U.S.C. 343–1(b)), States may petition FDA for exemption from Federal preemption of State food labeling and standard-of-identity requirements. Section 100.1(d) (21 CFR 100.1(d)) sets forth the information a State is required to submit in such a petition. The information required under § 100.1(d) enables FDA to determine whether the State food labeling or standard-of-identity requirement satisfies the criteria of section 403A(b) of the FD&C Act for granting exemption from Federal preemption.

Description of Respondents: The respondents to this collection of information are state and local governments who regulate food labeling and standards of identity.

FDA estimates the burden of this collection of information as follows:

TABLE 1—ESTIMATED ANNUAL REPORTING BURDEN [1]

21 CFR section	Number of respondents	Number of responses per respondent	Total annual responses	Average burden per response	Total hours
100.1(d)	1	1	1	40	40

[1] There are no capital costs or operating and maintenance costs associated with this collection of information.

The reporting burden for § 100.1(d) is minimal because petitions for exemption from preemption are seldom submitted by States. In the last 3 years, we have received one new petition for exemption from preemption; therefore, we estimate that one or fewer petitions will be submitted annually.

Based on a review of the information collection since our last request for OMB approval, we have made no adjustments to our burden estimate.

Dated: May 4, 2020.

Lowell J. Schiller,

Principal Associate Commissioner for Policy.

[FR Doc. 2020–11033 Filed 5–21–20; 8:45 am]

BILLING CODE 4164–01–P

DEPARTMENT OF HEALTH AND HUMAN SERVICES

Food and Drug Administration

[Docket No. FDA–2020–N–1371]

Request for Nominations on the Tobacco Products Scientific Advisory Committee

AGENCY: Food and Drug Administration, HHS.

ACTION: Notice.

SUMMARY: The Food and Drug Administration (FDA) is requesting nominations for a nonvoting representative of the interests of the tobacco growers to serve on the Tobacco Products Scientific Advisory Committee (TPSAC), in the Center for Tobacco Products. FDA seeks to include the views of women and men, members of all racial and ethnic groups, and individuals with and without disabilities on its advisory committees and, therefore encourages nominations of appropriately qualified candidates from these groups. A nominee may either be self-nominated or nominated by an organization. In addition, FDA is requesting that any industry organizations interested in participating in the selection of a nonvoting representative of the interests of the tobacco growers industry to serve on the TPSAC, notify FDA in writing. Nominations will be accepted for either the representative to serve on TPSAC or for the selection group effective with this notice.

DATES: Nomination materials for prospective candidates should be sent to FDA by June 22, 2020. Concurrently, any industry organization interested in participating in the selection of an appropriate nonvoting member to represent the interests of the tobacco growers industry must send a letter stating that interest to the FDA by June 22, 2020 (see sections I and II of this document for further details).

ADDRESSES: All nominations for nonvoting representatives of the interests of the tobacco growers industry may be submitted electronically by accessing the FDA Advisory Committee Membership Nomination Portal: *https://www.accessdata.fda.gov/scripts/FACTRSPortal/FACTRS/index.cfm* or by mail to Advisory Committee Oversight and Management Staff, Food and Drug Administration, 10903 New Hampshire Ave., Bldg. 32, rm. 5103, Silver Spring, MD 20993–0002.

All statements of interest from industry organizations interested in participating in the selection process of nonvoting representatives of the interests of the tobacco growers industry nomination should be sent to Janice O'Connor (see **FOR FURTHER INFORMATION CONTACT**).

FOR FURTHER INFORMATION CONTACT: Janice O'Connor, Office of Science, Center for Tobacco Products, Food and Drug Administration, Center for Tobacco Products, Document Control Center, Bldg. 71, Rm. G335, 10903 New Hampshire Ave., Silver Spring, MD 20993–0002, 1–877–287–1373 (choose Option 5), email: *TPSAC@fda.hhs.gov.*

Information about becoming a member of an FDA advisory committee can also be obtained by visiting FDA's website at: *http://www.fda.gov/AdvisoryCommittees/default.htm.*

SUPPLEMENTARY INFORMATION: FDA is requesting nominations for a nonvoting representative of the interests of the tobacco growers industry on the TPSAC.

I. General Description of the Committee Duties

The TPSAC advises the Commissioner of Food and Drugs (the Commissioner) or designee in discharging responsibilities related to the regulation of tobacco products. The TPSAC reviews and evaluates safety, dependence, or health issues relating to tobacco products and provides appropriate advice, information, and recommendations to the Commissioner.

II. Nomination Procedure

Individuals may self-nominate and/or an organization may nominate one or more individuals to serve as a nonvoting representative of the interests of the tobacco growers industry. Nominations must include a current résumé or curriculum vitae for each nominee, including current business address and/or home address, telephone number, and email address if available. Nominations must specify the advisory committee for which the nominee is recommended. Nominations must also acknowledge that the nominee is aware of the nomination unless self-nominated. The nomination should be sent to the FDA Advisory Committee Membership Nomination Portal (see **ADDRESSES**) within 30 days of publication of this document (see **DATES**). FDA will forward all nominations to the organizations expressing interest in participating in the selection process. (Persons who nominate themselves as nonvoting industry representatives will not participate in the selection process.)

III. Selection Procedure

The Agency is also seeking names of organizations to participate in the selection of the nonvoting representative of the interests of the tobacco growers industry. Any industry organization interested in participating in the selection of an appropriate nonvoting member to represent growers industry interests should send a letter stating that interest to the FDA contact (see **FOR FURTHER INFORMATION CONTACT**) within 30 days of publication of this document (see **DATES**). Within the subsequent 30 days, FDA will send a letter to each organization that has expressed an interest in participating in the selection group, attaching a complete list of all organizations participating in selection; and a list of all nonvoting nominees along with their current résumés. The letter will also state that it is the responsibility of the interested organizations on the selection group to confer with one another and to select a candidate and an alternative as backup, within 60 days after the receipt of the FDA letter, to serve as the nonvoting member to represent growers industry interests for the TPSAC. The interested organizations are not bound by the list of nominees in selecting a candidate. However, if no individual is selected within 60 days, the Commissioner will select the nonvoting member to represent growers industry interests.

This notice is issued under the Federal Advisory Committee Act (5 U.S.C. app. 2) and 21 CFR part 14, relating to advisory committees.

Dated: May 18, 2020.

Lowell J. Schiller,

Principal Associate Commissioner for Policy.

[FR Doc. 2020–11065 Filed 5–21–20; 8:45 am]

BILLING CODE 4164–01–P

DEPARTMENT OF HEALTH AND HUMAN SERVICES

National Institutes of Health

Prospective Grant of an Exclusive Patent License: Antibody-Based Therapy for the Treatment of CD20 Expressing Lymphomas

AGENCY: National Institutes of Health, HHS.

ACTION: Notice.

SUMMARY: The National Heart, Lung, and Blood Institute, an institute of the National Institutes of Health, Department of Health and Human Services, is contemplating the grant of an exclusive patent license to practice the inventions embodied in the Patents and Patent Applications listed in the Supplementary Information section of this notice to Retargeted Therapeutics, a corporation incorporated under the laws of the state of Delaware.

DATES: Only written comments and/or applications for a license which are received by the National Heart, Lung, and Blood on or before June 8, 2020 will be considered.

ADDRESSES: Requests for copies of the patent application, inquiries, and comments relating to the contemplated an exclusive patent license should be directed to: Vidita Choudhry, Ph.D. Technology Transfer Manager, 31 Center Drive Room 4A29, MSC2479, Bethesda, MD 20892–2479, phone number (301)–594–4095, or *vidita.choudhry@nih.gov.*

SUPPLEMENTARY INFORMATION:

INTELLECTUAL PROPERTY

NIH ref No.	Title	Patent application No.	Filing date	Issued patent No.	Issue date
E–758–2013–0–US–01	Antibody Targeting Cell Surface Deposited Complement Protein C3d and Use Thereof.	61/924,967	January 8, 2014		
E–758–2013–1–PCT–01	Antibody Targeting Cell Surface Deposited Complement Protein C3d and Use Thereof.	PCT/US2015/010620	January 8, 2015		
E–758–2013–1–US–02	Antibody Targeting Cell Surface Deposited Complement Protein C3d and Use Thereof.	15/110,577	July 8, 2016	10,035,848	July 31, 2018.
E–758–2013—1–CA–03	Antibody Targeting Cell Surface Deposited Complement Protein C3d and Use Thereof.	2936346	January 8, 2015		
E–758–2013–1–EP–04	Antibody Targeting Cell Surface Deposited Complement Protein C3d and Use Thereof.	15701442.4	January 8, 2015	3092252	September 18, 2019.
E–758–2013–1–US–05	Antibody Targeting Cell Surface Deposited Complement Protein C3d and Use Thereof.	16/047,929	July 27, 2018		
E–025–2019–0–US–01	Antibody Targeting Cell Surface Deposited Complement Protein C3d and Use Thereof.	62/945,569	December 9, 2019		

Intellectual property listed here includes all U.S. and foreign patents and applications claiming priority to any member of the aforementioned applications.

The patent rights in these inventions have been assigned or exclusively licensed to the Government of the United States of America.

The prospective exclusive license territory may be worldwide and in fields of use that may be limited to use of anti-C3d monoclonal antibodies (mAbs) to potentiate anti-tumor activity of anti-CD20 mAbs for the treatment of B-cell lymphomas.

The aforementioned Patents and Patent applications cover technology directed to development of anti-C3d antibody or antibody fragments to re-target cells that have escaped from existing mAbs therapy and to potentiate the anti-tumor activity of therapeutic mAbs and eliminate antigen loss variants.

This notice is made in accordance with 35 U.S.C. 209 and 37 CFR part 404. The prospective exclusive license will be royalty bearing. The prospective exclusive license may be granted unless within fifteen (15) days from the date of this published notice, the National Heart, Lung, and Blood Institute receives written evidence and argument that establishes that the grant of the license would not be consistent with the requirements of 35 U.S.C. 209 and 37 CFR part 404.

In response to this Notice, the public may file comments or objections. Comments and objections, other than those in the form of a license application, will not be treated confidentially, and may be made publicly available.

License applications submitted in response to this notice will be presumed to contain business confidential information and any release of information in these license applications will be made only as required and upon a request under the Freedom of Information Act, 5 U.S.C. 552.

Dated: May 14, 2020.

Bruce D. Goldstein,

Director, Office of Technology Transfer and Development, National Heart, Lung, and Blood Institute.

[FR Doc. 2020–11036 Filed 5–21–20; 8:45 am]

BILLING CODE 4140–01–P

DEPARTMENT OF HEALTH AND HUMAN SERVICES

National Institutes of Health

National Institute of Allergy and Infectious Diseases; Notice of Closed Meeting

Pursuant to section 10(d) of the Federal Advisory Committee Act, as amended, notice is hereby given of the following meeting.

The meeting will be closed to the public in accordance with the provisions set forth in sections 552b(c)(4) and 552b(c)(6), Title 5 U.S.C., as amended. The grant applications and the discussions could disclose confidential trade secrets or commercial property such as patentable material, and personal information concerning individuals associated with the grant applications, the disclosure of which would constitute a clearly unwarranted invasion of personal privacy.

Name of Committee: National Institute of Allergy and Infectious Diseases Special Emphasis Panel; NIAID Resource-Related Research Projects (R24 Clinical Trial Not Allowed).

Date: June 23, 2020.

Time: 1:30 p.m. to 3:30 p.m.

Agenda: To review and evaluate grant applications.

Place: National Institute of Allergy and Infectious Diseases, National Institutes of Health, 5601 Fishers Lane, Room 3F58,

Rockville, MD 20892, (Telephone Conference Call).

Contact Person: Mario Cerritelli, Ph.D., Scientific Review Officer, Scientific Review Program, Division of Extramural Activities, National Institute of Allergy and Infectious Diseases, National Institutes of Health, 5601 Fishers Lane, Room 3F58, Rockville, MD 20852, 240–669–5199, *cerritem@mail.nih.gov.*

(Catalogue of Federal Domestic Assistance Program Nos. 93.855, Allergy, Immunology, and Transplantation Research; 93.856, Microbiology and Infectious Diseases Research, National Institutes of Health, HHS)

Dated: May 18, 2020.

Tyeshia M. Roberson,

Program Analyst, Office of Federal Advisory Committee Policy.

[FR Doc. 2020–11059 Filed 5–21–20; 8:45 am]

BILLING CODE 4140–01–P

DEPARTMENT OF HEALTH AND HUMAN SERVICES

National Institutes of Health

Center for Scientific Review; Amended Notice of Meeting

Notice is hereby given of a change in the meeting of the Electrical Signaling, Ion Transport, and Arrhythmias Study Section, June 10, 2020, 10:00 a.m. to June 10, 2020, 06:00 p.m., National Institutes of Health, Rockledge II, 6701 Rockledge Drive, Bethesda, MD 20892 which was published in the **Federal Register** on May 12, 2020, 85 FR 28022.

This notice is being amended to change the meeting start time from 11:00 a.m. to 10:00 a.m. The meeting is closed to the public.

Dated: May 18, 2020.

Tyeshia M. Roberson,

Program Analyst, Office of Federal Advisory Committee Policy.

[FR Doc. 2020–11058 Filed 5–21–20; 8:45 am]

BILLING CODE 4140–01–P

DEPARTMENT OF HEALTH AND HUMAN SERVICES

National Institutes of Health

National Heart, Lung, and Blood Institute; Amended Notice of Meeting

Notice is hereby given of a change in the meeting of the SINGLE–SITE AND PILOT CLINICAL TRIALS REVIEW COMMITTEE, June 24, 2020, 08:00 a.m. to June 25, 2020, 05:00 p.m., National Institute of Health (NIH), Rockledge 1, 6705 Rockledge Drive, Bethesda, MD 20892 which was published in the **Federal Register** on May 18, 2020, 85 FR 29732. The NHLBI Initial/Integrated Review Group meeting is being amended to change the meeting start time to 9:00 a.m. and end time to 3:00 p.m. This two-day meeting to be held on June 24–25, 2020 will be a teleconference meeting. The meeting is closed to the public.

Dated: May 19, 2020.

Ronald J. Livingston, Jr.,

Program Analyst, Office of Federal Advisory Committee Policy.

[FR Doc. 2020–11125 Filed 5–21–20; 8:45 am]

BILLING CODE 4140–01–P

DEPARTMENT OF HEALTH AND HUMAN SERVICES

National Institutes of Health

Center for Scientific Review Amended; Notice of Meeting

Notice is hereby given of a change in the meeting of the Cardiovascular Differentiation and Development Study Section, June 11, 2020, 10:00 a.m. to June 11, 2020, 07:00 p.m., National Institutes of Health, Rockledge II, 6701 Rockledge Drive, Bethesda, MD, 20892 which was published in the **Federal Register** on May 12, 2020, 85 FR 28022.

This notice is being amended to change the meeting start time from 11:00 a.m. to 10:00 a.m. The meeting is closed to the public.

Dated: May 18, 2020.

Tyeshia M. Roberson,

Program Analyst, Office of Federal Advisory Committee Policy.

[FR Doc. 2020–11063 Filed 5–21–20; 8:45 am]

BILLING CODE 4140–01–P

DEPARTMENT OF HEALTH AND HUMAN SERVICES

National Institutes of Health

Office of the Director, National Institutes of Health; Notice of Meeting

Pursuant to section 10(d) of the Federal Advisory Committee Act, as amended, notice is hereby given of a meeting of the Advisory Committee to the Director, National Institutes of Health.

The meeting will be held as a teleconference call only and is open to the public to dial-in for participation. Individuals who plan to dial-in to the meeting and need special assistance or other reasonable accommodations to do so, should notify the Contact Person listed below in advance of the meeting.

Name of Committee: Advisory Committee to the Director, National Institutes of Health.

Date: May 26, 2020.

Time: 1:00 p.m. to 2:00 p.m.

Agenda: ACD to review and approve concept clearances for the Rapid Acceleration of Diagnostics (RADx) program to develop COVID–19 testing technologies, which is part of NIH's response to the COVID–19 pandemic.

Place: National Institutes of Health, Building 1, One Center Drive, Bethesda, MD 20892, (Telephone Conference Call), 800–369–1912, Access Code: 1019627.

Contact Person: Gretchen Wood, Staff Assistant, National Institutes of Health, Office of the Director, One Center Drive, Building 1, Room 126, Bethesda, MD 20892, 301–496–4272, *Woodgs@od.nih.gov.*

Any interested person may file written comments with the committee by forwarding the statement to the Contact Person listed on this notice. The statement should include the name, address, telephone number and when applicable, the business or professional affiliation of the interested person.

Information is also available on the Institute's/Center's home page: *http://acd.od.nih.gov,* where an agenda and any additional information for the meeting will be posted when available.

This notice is being published less than 15 days prior to the meeting due to scheduling difficulties.

(Catalogue of Federal Domestic Assistance Program Nos. 93.14, Intramural Research Training Award; 93.22, Clinical Research Loan Repayment Program for Individuals from Disadvantaged Backgrounds; 93.232, Loan Repayment Program for Research Generally; 93.39, Academic Research Enhancement Award; 93.936, NIH Acquired Immunodeficiency Syndrome Research Loan Repayment Program; 93.187, Undergraduate Scholarship Program for Individuals from Disadvantaged Backgrounds, National Institutes of Health, HHS)

Dated: May 18, 2020.

Natasha M. Copeland,

Deputy Director, Office of Federal Advisory Committee Policy.

[FR Doc. 2020–11061 Filed 5–21–20; 8:45 am]

BILLING CODE 4140–01–P

DEPARTMENT OF HEALTH AND HUMAN SERVICES

National Institutes of Health

Center for Scientific Review; Notice of Closed Meetings

Pursuant to section 10(d) of the Federal Advisory Committee Act, as amended, notice is hereby given of the following meetings.

The meetings will be closed to the public in accordance with the provisions set forth in sections 552b(c)(4) and 552b(c)(6), Title 5 U.S.C., as amended. The grant applications and the discussions could disclose confidential trade secrets or commercial property such as patentable material, and personal information concerning individuals associated with the grant

applications, the disclosure of which would constitute a clearly unwarranted invasion of personal privacy.

Name of Committee: Cell Biology Integrated Review Group; Membrane Biology and Protein Processing Study Section.
Date: June 15, 2020.
Time: 10:00 a.m. to 6:00 p.m.
Agenda: To review and evaluate grant applications.
Place: National Institutes of Health, Rockledge II, 6701 Rockledge Drive, Bethesda, MD 20892 (Virtual Meeting).
Contact Person: David Balasundaram, Ph.D., Scientific Review Officer, Center for Scientific Review, National Institutes of Health, 6701 Rockledge Drive, Room 5189, MSC 7840, Bethesda, MD 20892, 301–435–1022, *balasundaramd@csr.nih.gov.*

Name of Committee: Genes, Genomes, and Genetics Integrated Review Group; Genetic Variation and Evolution Study Section.
Date: June 22–23, 2020.
Time: 8:00 a.m. to 7:00 p.m.
Agenda: To review and evaluate grant applications.
Place: National Institutes of Health, Rockledge II, 6701 Rockledge Drive, Bethesda, MD 20892 (Virtual Meeting).
Contact Person: Guoqin Yu, Ph.D., Scientific Review Officer, Center for Scientific Review, National Institutes of Health, 6701 Rockledge Drive, Bethesda, MD 20892, (301) 435–1276, *guoqin.yu@nih.gov.*

Name of Committee: Center for Scientific Review Special Emphasis Panel; Genetic Variation and Evolution.
Date: June 22, 2020.
Time: 2:00 p.m. to 6:00 p.m.
Agenda: To review and evaluate grant applications.
Place: National Institutes of Health, Rockledge II, 6701 Rockledge Drive, Bethesda, MD 20892 (Virtual Meeting).
Contact Person: Emily Foley, Ph.D., Scientific Review Officer, Center for Scientific Review, Bethesda, MD 20892, 301–402–3016, *emily.foley@nih.gov.*

Name of Committee: Center for Scientific Review Special Emphasis Panel; Fellowships: Biophysical, Physiological, Pharmacological and Bioengineering Neuroscience.
Date: June 25–26, 2020.
Time: 8:00 a.m. to 6:00 p.m.
Agenda: To review and evaluate grant applications.
Place: National Institutes of Health, Rockledge II, 6701 Rockledge Drive, Bethesda, MD 20892 (Virtual Meeting).
Contact Person: Sussan Paydar, Ph.D., Scientific Review Officer, Center for Scientific Review, National Institutes of Health, 6701 Rockledge Drive, RM 5222, Bethesda, MD 20817, (301) 827–4994, *sussan.paydar@nih.gov.*

Name of Committee: Biobehavioral and Behavioral Processes Integrated Review Group; Biobehavioral Mechanisms of Emotion, Stress and Health Study Section.
Date: June 25–26, 2020.
Time: 8:00 a.m. to 4:00 p.m.
Agenda: To review and evaluate grant applications.
Place: National Institutes of Health, Rockledge II, 6701 Rockledge Drive, Bethesda, MD 20892 (Virtual Meeting).
Contact Person: Benjamin Shapero, Ph.D., Scientific Review Officer, Center for Scientific Review, National Institutes of Health, 6701 Rockledge Drive, Room 3182, Bethesda 20892, (301) 402–4786, *shaperobg@mail.nih.gov.*

Name of Committee: Endocrinology, Metabolism, Nutrition and Reproductive Sciences Integrated Review Group; Integrative Nutrition and Metabolic Processes Study Section.
Date: June 25–26, 2020.
Time: 8:00 a.m. to 7:00 p.m.
Agenda: To review and evaluate grant applications.
Place: National Institutes of Health, Rockledge II, 6701 Rockledge Dr., Bethesda, MD 20892 (Virtual Meeting).
Contact Person: Gregory S. Shelness, Ph.D., Scientific Review Officer, Center for Scientific Review, National Institutes of Health, 6701 Rockledge Drive, Room 6156, Bethesda, MD 20892–7892, 301–755–4335, *greg.shelness@nih.gov.*

Name of Committee: Integrative, Functional and Cognitive Neuroscience Integrated Review Group; Auditory System Study Section.
Date: June 25–26, 2020.
Time: 8:00 a.m. to 6:00 p.m.
Agenda: To review and evaluate grant applications.
Place: National Institutes of Health, Rockledge II, 6701 Rockledge Drive, Bethesda, MD 20892 (Virtual Meeting).
Contact Person: Janita N. Turchi, Ph.D., Scientific Review Officer, Center for Scientific Review, National Institutes of Health, 6701 Rockledge Drive, Bethesda, MD 20892, (301) 402–4005, *turchij@mail.nih.gov.*

Name of Committee: Center for Scientific Review Special Emphasis Panel; Cancer Drug Development and Therapeutics.
Date: June 25–26, 2020.
Time: 8:00 a.m. to 5:00 p.m.
Agenda: To review and evaluate grant applications.
Place: National Institutes of Health, Rockledge II, 6701 Rockledge Drive, Bethesda, MD 20892 (Virtual Meeting).
Contact Person: Lilia Topol, Ph.D., Scientific Review Officer, Center for Scientific Review, National Institutes of Health, 6701 Rockledge Drive, Room 6192, MSC 7804, Bethesda, MD 20892, 301–451–0131, *ltopol@mail.nih.gov.*

Name of Committee: Healthcare Delivery and Methodologies Integrated Review Group; Health Services Organization and Delivery Study Section.
Date: June 25–26, 2020.
Time: 8:30 a.m. to 6:00 p.m.
Agenda: To review and evaluate grant applications.
Place: National Institutes of Health, Rockledge II, 6701 Rockledge Drive, Bethesda, MD 20892 (Virtual Meeting).
Contact Person: Jacinta Bronte-Tinkew, Ph.D., Scientific Review Officer, Center for Scientific Review, National Institutes of Health, 6701 Rockledge Drive, Room 3164, MSC 7770, Bethesda, MD 20892, (301) 806–0009, *brontetinkewjm@csr.nih.gov.*

Name of Committee: Center for Scientific Review Special Emphasis Panel; Small Business: Microbial (non-HIV) Diagnostics and Detection of Infectious Agents, Food and Waterborne Pathogens, and Methods in Microbial Sterilization, Disinfection and Bioremediation Special Emphasis Panel.
Date: June 25–26, 2020.
Time: 9:00 a.m. to 6:30 p.m.
Agenda: To review and evaluate grant applications.
Place: National Institutes of Health, Rockledge II, 6701 Rockledge Drive, Bethesda, MD 20892 (Virtual Meeting).
Contact Person: Gagan Pandya, Ph.D., Scientific Review Officer, National Institutes of Health, Center for Scientific Review, 6701 Rockledge Drive, RM 3200, MSC 7808, Bethesda, MD 20892, 301–435–1167, *pandyaga@mail.nih.gov.*

Name of Committee: Bioengineering Sciences & Technologies Integrated Review Group; Instrumentation and Systems Development Study Section.
Date: June 25–26, 2020.
Time: 9:30 a.m. to 7:00 p.m.
Agenda: To review and evaluate grant applications.
Place: National Institutes of Health, Rockledge II, 6701 Rockledge Drive, Bethesda, MD 20892 (Virtual Meeting).
Contact Person: Kee Forbes, Ph.D., Scientific Review Officer, Center for Scientific Review, National Institutes of Health, 6701 Rockledge Drive, Room 5148, MSC 7806, Bethesda, MD 20892, 301–272–4865, *pyonkh2@csr.nih.gov.*

Name of Committee: Center for Scientific Review Special Emphasis Panel; Small Business: Endocrinology, Metabolism, Nutrition and Reproductive Sciences.
Date: June 25–26, 2020.
Time: 10:00 a.m. to 6:00 p.m.
Agenda: To review and evaluate grant applications.
Place: National Institutes of Health, Rockledge II, 6701 Rockledge Drive, Bethesda, MD 20892 (Virtual Meeting).
Contact Person: Yunshang Piao, Ph.D., Scientific Review Officer, Center for Scientific Review, National Institute of Health, 6701 Rockledge Drive, Room 6184, Bethesda, MD 20892, 301.402.8402, *piaoy3@mail.nih.gov.*

Name of Committee: Infectious Diseases and Microbiology Integrated Review Group; Virology—A Study Section.
Date: June 25–26, 2020.
Time: 10:00 a.m. to 6:00 p.m.
Agenda: To review and evaluate grant applications.
Place: National Institutes of Health, Rockledge II, 6701 Rockledge Drive, Bethesda, MD 20892 (Virtual Meeting).
Contact Person: Kenneth M. Izumi, Ph.D., Scientific Review Officer, Center for Scientific Review, National Institutes of Health, 6701 Rockledge Drive, Room 3204, MSC 7808, Bethesda, MD 20892, 301–496–6980, *izumikm@csr.nih.gov.*

Name of Committee: Oncology 1—Basic Translational Integrated Review Group; Cancer Etiology Study Section.
Date: June 25, 2020.
Time: 10:00 a.m. to 7:00 p.m.

Agenda: To review and evaluate grant applications.

Place: National Institutes of Health, Rockledge II, 6701 Rockledge Drive, Bethesda, MD 20892 (Virtual Meeting).

Contact Person: Ola Mae Zack Howard, Ph.D., Scientific Review Officer, Center for Scientific Review, National Institutes of Health, 6701 Rockledge Dr., Room 4192, MSC 7806, Bethesda, MD 20892, 301–451–4467, *howardz@mail.nih.gov.*

(Catalogue of Federal Domestic Assistance Program Nos. 93.306, Comparative Medicine; 93.333, Clinical Research, 93.306, 93.333, 93.337, 93.393–93.396, 93.837–93.844, 93.846–93.878, 93.892, 93.893, National Institutes of Health, HHS)

Dated: May 18, 2020.

Tyeshia M. Roberson,

Program Analyst, Office of Federal Advisory Committee Policy.

[FR Doc. 2020–11057 Filed 5–21–20; 8:45 am]

BILLING CODE 4140–01–P

DEPARTMENT OF HEALTH AND HUMAN SERVICES

National Institutes of Health

National Institute of Allergy and Infectious Diseases; Notice of Closed Meetings

Pursuant to section 10(d) of the Federal Advisory Committee Act, as amended, notice is hereby given of the following meetings.

The meetings will be closed to the public in accordance with the provisions set forth in sections 552b(c)(4) and 552b(c)(6), Title 5 U.S.C., as amended. The grant applications and the discussions could disclose confidential trade secrets or commercial property such as patentable material, and personal information concerning individuals associated with the grant applications, the disclosure of which would constitute a clearly unwarranted invasion of personal privacy.

Name of Committee: National Institute of Allergy and Infectious Diseases Special Emphasis Panel; NIAID Investigator Initiated Program Project Applications (P01).

Date: June 16, 2020.

Time: 11:00 a.m. to 5:00 p.m.

Agenda: To review and evaluate grant applications.

Place: National Institute of Allergy and Infectious Diseases, National Institutes of Health, 5601 Fishers Lane, Room 3G51, Rockville, MD 20892, (Telephone Conference Call).

Contact Person: Thomas F. Conway, Ph.D., Scientific Review Officer, Scientific Review Program, Division of Extramural Activities, National Institute of Allergy and Infectious Diseases, National Institutes of Health, 5601 Fishers Lane, Room 3G51, Bethesda, MD 20892–9823, 240–507–9685, *thomas.conway@nih.gov.*

Name of Committee: National Institute of Allergy and Infectious Diseases Special Emphasis Panel; NIAID Investigator Initiated Program Project Applications (P01).

Date: June 18, 2020.

Time: 1:00 p.m. to 4:00 p.m.

Agenda: To review and evaluate grant applications.

Place: National Institute of Allergy and Infectious Diseases, National Institutes of Health, 5601 Fishers Lane, Room 3G51, Rockville, MD 20892, (Telephone Conference Call).

Contact Person: Thomas F. Conway, Ph.D., Scientific Review Officer, Scientific Review Program, Division of Extramural Activities, National Institute of Allergy and Infectious Diseases, National Institutes of Health, 5601 Fishers Lane, Room 3G51, Bethesda, MD 20892–9823, 240–507–9685, *thomas.conway@nih.gov.*

(Catalogue of Federal Domestic Assistance Program Nos. 93.855, Allergy, Immunology, and Transplantation Research; 93.856, Microbiology and Infectious Diseases Research, National Institutes of Health, HHS)

Dated: May 18, 2020.

Tyeshia M. Roberson,

Program Analyst, Office of Federal Advisory Committee Policy.

[FR Doc. 2020–11060 Filed 5–21–20; 8:45 am]

BILLING CODE 4140–01–P

DEPARTMENT OF HOMELAND SECURITY

Federal Emergency Management Agency

[Docket ID: FEMA–2020–0013; OMB No. 1660–0061]

Agency Information Collection Activities: Submission for OMB Review; Comment Request; Federal Assistance to Individuals and Households Program

AGENCY: Federal Emergency Management Agency, DHS.

ACTION: 30-Day notice and request for comments.

SUMMARY: The Federal Emergency Management Agency (FEMA) will submit the information collection abstracted below to the Office of Management and Budget for review and clearance in accordance with the requirements of the Paperwork Reduction Act of 1995. The submission will describe the nature of the information collection, the categories of respondents, the estimated burden (*i.e.,* the time, effort and resources used by respondents to respond) and cost, and the actual data collection instruments FEMA will use.

DATES: Comments must be submitted on or before June 22, 2020.

ADDRESSES: Written comments and recommendations for the proposed information collection should be sent within 30 days of publication of this notice to *www.reginfo.gov/public/do/PRAMain.* Find this particular information collection by selecting ''Currently under 30-day Review—Open for Public Comments'' or by using the search function.

FOR FURTHER INFORMATION CONTACT: Requests for additional information or copies of the information collection should be made to Director, Information Management Division, 500 C Street SW, Washington, DC 20472, email address *FEMA-Information-Collections-Management@fema.dhs.gov* or Brian Thompson, Supervisory Program Specialist, FEMA Recovery Directorate, 540–686–3602.

SUPPLEMENTARY INFORMATION: This proposed information collection previously published in the **Federal Register** on March 11, 2020 at 85 FR 14212 with a 60-day public comment period. FEMA received three comments from the public.

Comment 1: The commenter suggested that FEMA could minimize the burden for veterans with disabilities by having their patient advocates or service organizations asking if they have any unmet needs. Additionally, the commenter suggested that when a disability hinders someone's ability to understand things and when those serious needs have continued to not be met can deteriorate a service member's mental health dramatically. Finally the commenter stated that when service members need to apply to many different organizations and ask for help only to be advised to contact someone else without help can be very discouraging. Rather, a simple phone call from someone that has access to important information and the ability to help that person can really help. FEMA has initiated interrelated projects to increase the communication of the needs of registrants with disabilities across our programs and better support the needs of survivors with disabilities. Recognizing the need for more effective and actionable disability-related questions in the Registration Intake form (covered in OMB collection 1660–0002, Disaster Assistance Registration), FEMA is in the process of submitting a revision to OMB collection 1660–0002 to add a specific reasonable accommodation question, and an additional question capturing disability-related losses. The reasonable accommodation question will ask registrants to indicate if they have a disability-related need to access FEMA's programs and services. FEMA's

Individual Assistance (IA) Program and Office of Equal Rights (OER) are working to develop a written procedure to arrange for any accommodation/modification, and to develop training documents/curricula for all FEMA personnel involved in providing accommodations to disaster survivors. The **Federal Register** Notice for 1660–0002 which outlines the reasonable accommodation question addition should be posted in the near future for public comment.

The reasonable accommodation question was developed through collaboration between the FEMA Office of Disability Integration and Coordination (ODIC), the FEMA OER, the FEMA IA Program, the FEMA Office of External Affairs, and other relevant offices within FEMA. In addition to these offices, ODIC sought input from the National Council on Disability (NCD) to validate the language included in the question. NCD is an independent Federal agency charged with advising the President, Congress, and other Federal agencies regarding policies, programs, practices, and procedures that affect people with disabilities.

With the addition of the reasonable accommodation question in the registration intake form, FEMA will be better able to identify and assist applicants with completing the forms included in 1660–0061 (request for late application review, submitting appeals, completing the Authorization for the Release of Information form, requesting advance disaster assistance, and stop payment requests).

In addition, the policies regarding how and why FEMA can share applicant information are not in place to make it harder for veterans and others with disabilities to receive the help they need, but to protect them from fraud and identity theft by ensuring only those who have appropriate consent from the applicant can access their information. FEMA generally communicates directly with each applicant throughout the IHP process to gather information, inform them of their eligibility for assistance, refer them to other sources of assistance, and guide them on the proper use of IHP funds.

FEMA also generally communicates directly with each applicant to protect their private information. The Privacy Act of 1974 regulates how FEMA collects, uses, and discloses an applicant's personal information in order to protect the privacy of the applicant, and requires FEMA to obtain written consent from the applicant in order to share their disaster assistance records with a third party. For example, FEMA employees and contractors will always verify an applicant's identity before discussing eligibility or potential assistance. After verifying their identity with FEMA, the applicant can also give verbal permission for FEMA to speak with a third party regarding their case via the FEMA Helpline.

FEMA may share applicant information outside FEMA with entities such as States, territorial, Tribal, and local governments, voluntary organizations, and other organizations in accordance with published routine uses identified in DHS/FEMA–008 Disaster Recovery Assistance Files System of Records Notice. FEMA shares this information to enable the applicant to receive additional disaster assistance, prevent a duplication of benefits, and prevent future disaster losses.

Comment 2: The second comment was not a germane comment.

Comment 3: The commenter suggested that it should be made clear whether the Coronavirus pandemic falls within the bounds of a declared disaster or emergency which justifies provision of FEMA assistance of the type discussed after a disaster or emergency to aid in housing, food sources, medical needs, and other forms of aid provided by FEMA after an earthquake or hurricane, which should also be available to those families and persons needing assistance during the coronavirus emergency. At this time, the only declaration provided for Individual Assistance for COVID–19 is specific to Crisis Counseling. The Individuals and Households Program has not been authorized; therefore, FEMA is not accepting disaster assistance registrations for COVID–19 at this time and is not providing assistance under the Individuals and Households Program.

News Release HQ–20–091 dated April 9, 2020 on *FEMA.gov* about rent suspension is only in regard to disaster survivors who were already receiving temporary housing from FEMA in FEMA-provided Temporary Housing Units. For further information regarding FEMA's response to COVID–19, please visit *https://www.fema.gov/coronavirus.*

The purpose of this notice is to notify the public that FEMA will submit the information collection abstracted below to the Office of Management and Budget for review and clearance.

Collection of Information

Title: Federal Assistance to Individuals and Households Program.

Type of information collection: Revision of a currently approved information collection.

OMB Number: 1660–0061.

Form Titles and Numbers: FEMA Form 010–0–11, Individuals and Households Program (IHP)—Other Needs Assistance Administrative Option Selection; Development of State/Tribal Administrative Plan (SAP) for Other Needs Provision of IHP; FEMA Form 010–0–12 (English), Individuals and Households Program Application for Continued Temporary Housing Assistance; FEMA Form 010–0–12S (Spanish), Programa de Individuos y Familias Solicitud Para Continuar La Asistencia de Vivienda Temporera; Request for Approval of Late Registration; Appeal of Program Decision; FEMA Form 009–0–95 (English), Request for Advance Disaster Assistance; FEMA Form 009–0–95S (Spanish), Solicitud de Adelanto de la Asistencia por Desastre; FEMA Form 009–0–96 (English), Request to Stop Payment and Reissue Disaster Assistance Check; FEMA Form 009–0–96S (Spanish), Solicitud para Detener el Pago y Reemitir el Cheque de Asistencia por Desastre; FEMA Form 140–003d-1—(English), Authorization for the Release of Information Under the Privacy Act; FEMA Form 140–003d-1S—(Spanish), Autorización para la Divulgación de Información bajo el Acta de Privacidad.

Abstract: The collection provides applicants the ability to request approval of late applications, request continued temporary housing assistance, appeal program decisions, request advance disaster assistance, request assistance checks not received be stopped and reissued, and to authorize the release of information to third parties. It also establishes an agreement between FEMA and States, territories, and Tribal governments regarding the administration of the Other Needs provision of IHP.

Affected Public: Individuals or Households; State, Local, or Tribal Government.

Estimated Number of Respondents: 140,753.

Estimated Number of Responses: 185,057.

Estimated Total Annual Burden Hours: 150,828.

Estimated Total Annual Respondent Cost: $5,692,939.

Estimated Respondents' Operation and Maintenance Costs: NA.

Estimated Respondents' Capital and Start-Up Costs: NA.

Estimated Total Annual Cost to the Federal Government: $1,089,213.

Comments

Comments may be submitted as indicated in the **ADDRESSES** caption above. Comments are solicited to (a) evaluate whether the proposed data

collection is necessary for the proper performance of the agency, including whether the information shall have practical utility; (b) evaluate the accuracy of the agency's estimate of the burden of the proposed collection of information, including the validity of the methodology and assumptions used; (c) enhance the quality, utility, and clarity of the information to be collected; and (d) minimize the burden of the collection of information on those who are to respond, including through the use of appropriate automated, electronic, mechanical, or other technological collection techniques or other forms of information technology, *e.g.,* permitting electronic submission of responses.

Maile Arthur,

Deputy Director, Information Management Division, Office of the Chief Administrative Officer, Mission Support, Federal Emergency Management Agency, Department of Homeland Security.

[FR Doc. 2020–11081 Filed 5–21–20; 8:45 am]

BILLING CODE 9111–23–P

DEPARTMENT OF HOMELAND SECURITY

Federal Emergency Management Agency

[Internal Agency Docket No. FEMA–4541–DR; Docket ID FEMA–2020–0001]

Tennessee; Major Disaster and Related Determinations

AGENCY: Federal Emergency Management Agency, DHS.

ACTION: Notice.

SUMMARY: This is a notice of the Presidential declaration of a major disaster for the State of Tennessee (FEMA–4541–DR), dated April 24, 2020, and related determinations.

DATES: The declaration was issued April 24, 2020.

FOR FURTHER INFORMATION CONTACT: Dean Webster, Office of Response and Recovery, Federal Emergency Management Agency, 500 C Street SW, Washington, DC 20472, (202) 646–2833.

SUPPLEMENTARY INFORMATION: Notice is hereby given that, in a letter dated April 24, 2020, the President issued a major disaster declaration under the authority of the Robert T. Stafford Disaster Relief and Emergency Assistance Act, 42 U.S.C. 5121 *et seq.* (the ''Stafford Act''), as follows:

I have determined that the damage in certain areas of the State of Tennessee resulting from severe storms, tornadoes, straight-line winds, and flooding during the period of April 12 to April 13, 2020, is of sufficient severity and magnitude to warrant a major disaster declaration under the Robert T. Stafford Disaster Relief and Emergency Assistance Act, 42 U.S.C. 5121 *et seq.* (the ''Stafford Act''). Therefore, I declare that such a major disaster exists in the State of Tennessee.

In order to provide Federal assistance, you are hereby authorized to allocate from funds available for these purposes such amounts as you find necessary for Federal disaster assistance and administrative expenses.

You are authorized to provide Individual Assistance and Public Assistance in the designated areas and Hazard Mitigation throughout the State. Consistent with the requirement that Federal assistance be supplemental, any Federal funds provided under the Stafford Act for Public Assistance, Hazard Mitigation, and Other Needs Assistance under section 408 of the Stafford Act will be limited to 75 percent of the total eligible costs.

Further, you are authorized to make changes to this declaration for the approved assistance to the extent allowable under the Stafford Act.

The time period prescribed for the implementation of section 310(a), Priority to Certain Applications for Public Facility and Public Housing Assistance, 42 U.S.C. 5153, shall be for a period not to exceed six months after the date of this declaration.

The Federal Emergency Management Agency (FEMA) hereby gives notice that pursuant to the authority vested in the Administrator, under Executive Order 12148, as amended, Myra M. Shird, of FEMA is appointed to act as the Federal Coordinating Officer for this major disaster.

The following areas of the State of Tennessee have been designated as adversely affected by this major disaster:

Bradley and Hamilton Counties for Individual Assistance.

Bradley, Campbell, Hamilton, Marion, Monroe, Polk, Scott, and Washington Counties for Public Assistance.

All areas within the State of Tennessee are eligible for assistance under the Hazard Mitigation Grant Program.

The following Catalog of Federal Domestic Assistance Numbers (CFDA) are to be used for reporting and drawing funds: 97.030, Community Disaster Loans; 97.031, Cora Brown Fund; 97.032, Crisis Counseling; 97.033, Disaster Legal Services; 97.034, Disaster Unemployment Assistance (DUA); 97.046, Fire Management Assistance Grant; 97.048, Disaster Housing Assistance to Individuals and Households In Presidentially Declared Disaster Areas; 97.049, Presidentially Declared Disaster Assistance—Disaster Housing Operations for Individuals and Households; 97.050, Presidentially Declared Disaster Assistance to Individuals and Households—Other Needs; 97.036, Disaster Grants—Public Assistance (Presidentially Declared Disasters); 97.039, Hazard Mitigation Grant.

Pete Gaynor,

Administrator, Federal Emergency Management Agency.

[FR Doc. 2020–11107 Filed 5–21–20; 8:45 am]

BILLING CODE 9111–23–P

DEPARTMENT OF HOMELAND SECURITY

Federal Emergency Management Agency

[Internal Agency Docket No. FEMA–4542–DR; Docket ID FEMA–2020–0001]

South Carolina; Major Disaster and Related Determinations

AGENCY: Federal Emergency Management Agency, DHS.

ACTION: Notice.

SUMMARY: This is a notice of the Presidential declaration of a major disaster for the State of South Carolina (FEMA–4542–DR), dated May 1, 2020, and related determinations.

DATES: The declaration was issued May 1, 2020.

FOR FURTHER INFORMATION CONTACT: Dean Webster, Office of Response and Recovery, Federal Emergency Management Agency, 500 C Street SW, Washington, DC 20472, (202) 646–2833.

SUPPLEMENTARY INFORMATION: Notice is hereby given that, in a letter dated May 1, 2020, the President issued a major disaster declaration under the authority of the Robert T. Stafford Disaster Relief and Emergency Assistance Act, 42 U.S.C. 5121 *et seq.* (the ''Stafford Act''), as follows:

I have determined that the damage in certain areas of the State of South Carolina resulting from severe storms, tornadoes, and straight-line winds during the period of April 12 to April 13, 2020, is of sufficient severity and magnitude to warrant a major disaster declaration under the Robert T. Stafford Disaster Relief and Emergency Assistance Act, 42 U.S.C. 5121 *et seq.* (the ''Stafford Act''). Therefore, I declare that such a major disaster exists in the State of South Carolina.

In order to provide Federal assistance, you are hereby authorized to allocate from funds available for these purposes such amounts as you find necessary for Federal disaster assistance and administrative expenses.

You are authorized to provide Individual Assistance and Public Assistance in the designated areas and Hazard Mitigation throughout the State. Consistent with the requirement that Federal assistance be supplemental, any Federal funds provided under the Stafford Act for Public Assistance, Hazard Mitigation, and Other Needs Assistance under section 408 will be limited to 75 percent of the total eligible costs.

Further, you are authorized to make changes to this declaration for the approved assistance to the extent allowable under the Stafford Act.

The time period prescribed for the implementation of section 310(a), Priority to Certain Applications for Public Facility and Public Housing Assistance, 42 U.S.C. 5153, shall be for a period not to exceed six months after the date of this declaration.

The Federal Emergency Management Agency (FEMA) hereby gives notice that pursuant to the authority vested in the Administrator, under Executive Order 12148, as amended, Allan Jarvis, of FEMA is appointed to act as the Federal Coordinating Officer for this major disaster.

The following areas of the State of South Carolina have been designated as adversely affected by this major disaster:

Aiken, Colleton, Hampton, Marlboro, Oconee, Orangeburg, and Pickens Counties for Individual Assistance.

Barnwell, Colleton, Georgetown, Hampton, Oconee, Orangeburg, and Pickens Counties for Public Assistance.

All areas within the State of South Carolina are eligible for assistance under the Hazard Mitigation Grant Program.

The following Catalog of Federal Domestic Assistance Numbers (CFDA) are to be used for reporting and drawing funds: 97.030, Community Disaster Loans; 97.031, Cora Brown Fund; 97.032, Crisis Counseling; 97.033, Disaster Legal Services; 97.034, Disaster Unemployment Assistance (DUA); 97.046, Fire Management Assistance Grant; 97.048, Disaster Housing Assistance to Individuals and Households In Presidentially Declared Disaster Areas; 97.049, Presidentially Declared Disaster Assistance—Disaster Housing Operations for Individuals and Households; 97.050, Presidentially Declared Disaster Assistance to Individuals and Households—Other Needs; 97.036, Disaster Grants—Public Assistance (Presidentially Declared Disasters); 97.039, Hazard Mitigation Grant.

Pete Gaynor,

Administrator, Federal Emergency Management Agency.

[FR Doc. 2020–11109 Filed 5–21–20; 8:45 am]

BILLING CODE 9111–23–P

DEPARTMENT OF HOMELAND SECURITY

Federal Emergency Management Agency

[Internal Agency Docket No. FEMA–4473–DR; Docket ID FEMA–2020–0001]

Puerto Rico; Amendment No. 7 to Notice of a Major Disaster Declaration

AGENCY: Federal Emergency Management Agency, DHS.

ACTION: Notice.

SUMMARY: This notice amends the notice of a major disaster for the Commonwealth of Puerto Rico (FEMA–4473–DR), dated January 16, 2020, and related determinations.

DATES: The amendment was issued May 11, 2020.

FOR FURTHER INFORMATION CONTACT: Dean Webster, Office of Response and Recovery, Federal Emergency Management Agency, 500 C Street SW, Washington, DC 20472, (202) 646–2833.

SUPPLEMENTARY INFORMATION: Notice is hereby given that the incident period for this declared disaster is now December 28, 2019, and continuing.

The following Catalog of Federal Domestic Assistance Numbers (CFDA) are to be used for reporting and drawing funds: 97.030, Community Disaster Loans; 97.031, Cora Brown Fund; 97.032, Crisis Counseling; 97.033, Disaster Legal Services; 97.034, Disaster Unemployment Assistance (DUA); 97.046, Fire Management Assistance Grant; 97.048, Disaster Housing Assistance to Individuals and Households In Presidentially Declared Disaster Areas; 97.049, Presidentially Declared Disaster Assistance—Disaster Housing Operations for Individuals and Households; 97.050, Presidentially Declared Disaster Assistance to Individuals and Households—Other Needs; 97.036, Disaster Grants—Public Assistance (Presidentially Declared Disasters); 97.039, Hazard Mitigation Grant.

Pete Gaynor,

Administrator, Federal Emergency Management Agency.

[FR Doc. 2020–11100 Filed 5–21–20; 8:45 am]

BILLING CODE 9111–23–P

DEPARTMENT OF HOMELAND SECURITY

Federal Emergency Management Agency

[Internal Agency Docket No. FEMA–4536–DR; Docket ID FEMA–2020–0001]

Mississippi; Amendment No. 2 to Notice of a Major Disaster Declaration

AGENCY: Federal Emergency Management Agency, DHS.

ACTION: Notice.

SUMMARY: This notice amends the notice of a major disaster declaration for the State of Mississippi (FEMA–4536–DR), dated April 16, 2020, and related determinations.

DATES: This amendment was issued May 8, 2020.

FOR FURTHER INFORMATION CONTACT: Dean Webster, Office of Response and Recovery, Federal Emergency Management Agency, 500 C Street SW, Washington, DC 20472, (202) 646–2833.

SUPPLEMENTARY INFORMATION: The notice of a major disaster declaration for the State of Mississippi is hereby amended to include debris removal and permanent work under the Public Assistance program for those areas determined to have been adversely affected by the event declared a major disaster by the President in his declaration of April 16, 2020.

Covington, Jefferson Davis, and Jones Counties for Public Assistance [Categories A and C–G] (already designated for Individual Assistance and assistance for emergency protective measures [Category B], including direct federal assistance, under the Public Assistance program).

The following Catalog of Federal Domestic Assistance Numbers (CFDA) are to be used for reporting and drawing funds: 97.030, Community Disaster Loans; 97.031, Cora Brown Fund; 97.032, Crisis Counseling; 97.033, Disaster Legal Services; 97.034, Disaster Unemployment Assistance (DUA); 97.046, Fire Management Assistance Grant; 97.048, Disaster Housing Assistance to Individuals and Households In Presidentially Declared Disaster Areas; 97.049, Presidentially Declared Disaster Assistance—Disaster Housing Operations for Individuals and Households; 97.050 Presidentially Declared Disaster Assistance to Individuals and Households—Other Needs; 97.036, Disaster Grants—Public Assistance (Presidentially Declared Disasters); 97.039, Hazard Mitigation Grant.

Pete Gaynor,

Administrator, Federal Emergency Management Agency.

[FR Doc. 2020–11102 Filed 5–21–20; 8:45 am]

BILLING CODE 9111–23–P

DEPARTMENT OF HOMELAND SECURITY

Federal Emergency Management Agency

[Internal Agency Docket No. FEMA–4539–DR; Docket ID FEMA–2020–0001]

Washington; Major Disaster and Related Determinations

AGENCY: Federal Emergency Management Agency, DHS.

ACTION: Notice.

SUMMARY: This is a notice of the Presidential declaration of a major disaster for the State of Washington (FEMA–4539–DR), dated April 23, 2020, and related determinations.

DATES: The declaration was issued April 23, 2020.

FOR FURTHER INFORMATION CONTACT: Dean Webster, Office of Response and Recovery, Federal Emergency

Management Agency, 500 C Street SW, Washington, DC 20472, (202) 646–2833.

SUPPLEMENTARY INFORMATION: Notice is hereby given that, in a letter dated April 23, 2020, the President issued a major disaster declaration under the authority of the Robert T. Stafford Disaster Relief and Emergency Assistance Act, 42 U.S.C. 5121 *et seq.* (the ''Stafford Act''), as follows:

I have determined that the damage in certain areas of the State of Washington resulting from severe storms, flooding, landslides, and mudslides during the period of January 20 to February 10, 2020, is of sufficient severity and magnitude to warrant a major disaster declaration under the Robert T. Stafford Disaster Relief and Emergency Assistance Act, 42 U.S.C. 5121 *et seq.* (the ''Stafford Act''). Therefore, I declare that such a major disaster exists in the State of Washington.

In order to provide Federal assistance, you are hereby authorized to allocate from funds available for these purposes such amounts as you find necessary for Federal disaster assistance and administrative expenses.

You are authorized to provide Public Assistance in the designated areas and Hazard Mitigation throughout the State. Consistent with the requirement that Federal assistance be supplemental, any Federal funds provided under the Stafford Act for Public Assistance and Hazard Mitigation will be limited to 75 percent of the total eligible costs.

Further, you are authorized to make changes to this declaration for the approved assistance to the extent allowable under the Stafford Act.

The Federal Emergency Management Agency (FEMA) hereby gives notice that pursuant to the authority vested in the Administrator, under Executive Order 12148, as amended, Timothy B. Manner, of FEMA is appointed to act as the Federal Coordinating Officer for this major disaster.

The following areas of the State of Washington have been designated as adversely affected by this major disaster:

Columbia, Garfield, Grays Harbor, Island, King, Lewis, Mason, Pacific, San Juan, Skagit, Snohomish, Thurston, Wahkiakum, Walla Walla, and Whatcom Counties for Public Assistance.

All areas within the State of Washington are eligible for assistance under the Hazard Mitigation Grant Program.

The following Catalog of Federal Domestic Assistance Numbers (CFDA) are to be used for reporting and drawing funds: 97.030, Community Disaster Loans; 97.031, Cora Brown Fund; 97.032, Crisis Counseling; 97.033, Disaster Legal Services; 97.034, Disaster Unemployment Assistance (DUA); 97.046, Fire Management Assistance Grant; 97.048, Disaster Housing Assistance to Individuals and Households In Presidentially Declared Disaster Areas; 97.049, Presidentially Declared Disaster Assistance—Disaster Housing Operations for Individuals and Households; 97.050, Presidentially Declared Disaster Assistance to Individuals and Households—Other Needs; 97.036, Disaster Grants—Public Assistance (Presidentially Declared Disasters); 97.039, Hazard Mitigation Grant.

Pete Gaynor,

Administrator, Federal Emergency Management Agency.

[FR Doc. 2020–11105 Filed 5–21–20; 8:45 am]

BILLING CODE 9111–23–P

DEPARTMENT OF HOMELAND SECURITY

Federal Emergency Management Agency

[Internal Agency Docket No. FEMA–4536–DR; Docket ID FEMA–2020–0001]

Mississippi; Amendment No. 1 to Notice of a Major Disaster Declaration

AGENCY: Federal Emergency Management Agency, DHS.

ACTION: Notice.

SUMMARY: This notice amends the notice of a major disaster declaration for the State of Mississippi (FEMA–4536–DR), dated April 16, 2020, and related determinations.

DATES: This amendment was issued May 8, 2020.

FOR FURTHER INFORMATION CONTACT: Dean Webster, Office of Response and Recovery, Federal Emergency Management Agency, 500 C Street SW, Washington, DC 20472, (202) 646–2833.

SUPPLEMENTARY INFORMATION: The notice of a major disaster declaration for the State of Mississippi is hereby amended to include the following areas among those areas determined to have been adversely affected by the event declared a major disaster by the President in his declaration of April 16, 2020.

Clarke, Grenada, Jasper, Lawrence, Panola, and Walthall Counties for Individual Assistance.

The following Catalog of Federal Domestic Assistance Numbers (CFDA) are to be used for reporting and drawing funds: 97.030, Community Disaster Loans; 97.031, Cora Brown Fund; 97.032, Crisis Counseling; 97.033, Disaster Legal Services; 97.034, Disaster Unemployment Assistance (DUA); 97.046, Fire Management Assistance Grant; 97.048, Disaster Housing Assistance to Individuals and Households In Presidentially Declared Disaster Areas; 97.049, Presidentially Declared Disaster Assistance—Disaster Housing Operations for Individuals and Households; 97.050, Presidentially Declared Disaster Assistance to Individuals and Households—Other Needs; 97.036, Disaster Grants—Public Assistance (Presidentially Declared Disasters); 97.039, Hazard Mitigation Grant.

Pete Gaynor,

Administrator, Federal Emergency Management Agency.

[FR Doc. 2020–11101 Filed 5–21–20; 8:45 am]

BILLING CODE 9111–23–P

DEPARTMENT OF HOMELAND SECURITY

Federal Emergency Management Agency

[Internal Agency Docket No. FEMA–4536–DR; Docket ID FEMA–2020–0001]

Mississippi; Major Disaster and Related Determinations

AGENCY: Federal Emergency Management Agency, DHS.

ACTION: Notice.

SUMMARY: This is a notice of the Presidential declaration of a major disaster for the State of Mississippi (FEMA–4536–DR), dated April 16, 2020, and related determinations.

DATES: The declaration was issued April 16, 2020.

FOR FURTHER INFORMATION CONTACT: Dean Webster, Office of Response and Recovery, Federal Emergency Management Agency, 500 C Street SW, Washington, DC 20472, (202) 646–2833.

SUPPLEMENTARY INFORMATION: Notice is hereby given that, in a letter dated April 16, 2020, the President issued a major disaster declaration under the authority of the Robert T. Stafford Disaster Relief and Emergency Assistance Act, 42 U.S.C. 5121 *et seq.* (the ''Stafford Act''), as follows:

I have determined that the damage in certain areas of the State of Mississippi resulting from severe storms, tornadoes, straight-line winds, and flooding on April 12, 2020, is of sufficient severity and magnitude to warrant a major disaster declaration under the Robert T. Stafford Disaster Relief and Emergency Assistance Act, 42 U.S.C. 5121 *et seq.* (the ''Stafford Act''). Therefore, I declare that such a major disaster exists in the State of Mississippi.

In order to provide Federal assistance, you are hereby authorized to allocate from funds available for these purposes such amounts as you find necessary for Federal disaster assistance and administrative expenses.

You are authorized to provide Individual Assistance and assistance for emergency protective measures (Category B), including direct Federal assistance, under the Public Assistance program in the designated areas, Hazard Mitigation throughout the State, and any other forms of assistance under the Stafford Act that you deem appropriate subject to completion of Preliminary Damage Assessments (PDAs).

Consistent with the requirement that Federal assistance is supplemental, any Federal funds provided under the Stafford Act for Public Assistance, Hazard Mitigation, and Other Needs Assistance under section 408 of the Stafford Act will be limited to 75 percent of the total eligible costs.

Further, you are authorized to make changes to this declaration for the approved assistance to the extent allowable under the Stafford Act.

The time period prescribed for the implementation of section 310(a), Priority to Certain Applications for Public Facility and Public Housing Assistance, 42 U.S.C. 5153, shall be for a period not to exceed six months after the date of this declaration.

The Federal Emergency Management Agency (FEMA) hereby gives notice that pursuant to the authority vested in the Administrator, under Executive Order 12148, as amended, Jose M. Girot, of FEMA is appointed to act as the Federal Coordinating Officer for this major disaster.

The following areas of the State of Mississippi have been designated as adversely affected by this major disaster:

Covington, Jefferson Davis, and Jones Counties for Individual Assistance.

Covington, Jefferson Davis, and Jones Counties for emergency protective measures (Category B), including direct Federal assistance, under the Public Assistance program.

All areas within the State of Mississippi are eligible for assistance under the Hazard Mitigation Grant Program.

The following Catalog of Federal Domestic Assistance Numbers (CFDA) are to be used for reporting and drawing funds: 97.030, Community Disaster Loans; 97.031, Cora Brown Fund; 97.032, Crisis Counseling; 97.033, Disaster Legal Services; 97.034, Disaster Unemployment Assistance (DUA); 97.046, Fire Management Assistance Grant; 97.048, Disaster Housing Assistance to Individuals and Households In Presidentially Declared Disaster Areas; 97.049, Presidentially Declared Disaster Assistance—Disaster Housing Operations for Individuals and Households; 97.050, Presidentially Declared Disaster Assistance to Individuals and Households—Other Needs; 97.036, Disaster Grants—Public Assistance (Presidentially Declared Disasters); 97.039, Hazard Mitigation Grant.

Pete Gaynor,

Administrator, Federal Emergency Management Agency.

[FR Doc. 2020–11103 Filed 5–21–20; 8:45 am]

BILLING CODE 9111–23–P

DEPARTMENT OF HOMELAND SECURITY

Federal Emergency Management Agency

[Internal Agency Docket No. FEMA–4540–DR; Docket ID FEMA–2020–0001]

Kentucky; Major Disaster and Related Determinations

AGENCY: Federal Emergency Management Agency, DHS.

ACTION: Notice.

SUMMARY: This is a notice of the Presidential declaration of a major disaster for the Commonwealth of Kentucky (FEMA–4540–DR), dated April 24, 2020, and related determinations.

DATES: The declaration was issued April 24, 2020.

FOR FURTHER INFORMATION CONTACT: Dean Webster, Office of Response and Recovery, Federal Emergency Management Agency, 500 C Street SW, Washington, DC 20472, (202) 646–2833.

SUPPLEMENTARY INFORMATION: Notice is hereby given that, in a letter dated April 24, 2020, the President issued a major disaster declaration under the authority of the Robert T. Stafford Disaster Relief and Emergency Assistance Act, 42 U.S.C. 5121 *et seq.* (the ''Stafford Act''), as follows:

I have determined that the damage in certain areas of the Commonwealth of Kentucky resulting from severe storms, flooding, landslides, and mudslides during the period of February 3 to February 29, 2020, is of sufficient severity and magnitude to warrant a major disaster declaration under the Robert T. Stafford Disaster Relief and Emergency Assistance Act, 42 U.S.C. 5121 *et seq.* (the ''Stafford Act''). Therefore, I declare that such a major disaster exists in the Commonwealth of Kentucky.

In order to provide Federal assistance, you are hereby authorized to allocate from funds available for these purposes such amounts as you find necessary for Federal disaster assistance and administrative expenses.

You are authorized to provide Public Assistance in the designated areas and Hazard Mitigation throughout the Commonwealth. Consistent with the requirement that Federal assistance be supplemental, any Federal funds provided under the Stafford Act for Public Assistance and Hazard Mitigation will be limited to 75 percent of the total eligible costs.

Further, you are authorized to make changes to this declaration for the approved assistance to the extent allowable under the Stafford Act.

The Federal Emergency Management Agency (FEMA) hereby gives notice that pursuant to the authority vested in the Administrator, under Executive Order 12148, as amended, Allan Jarvis, of FEMA is appointed to act as the Federal Coordinating Officer for this major disaster.

The following areas of the Commonwealth of Kentucky have been designated as adversely affected by this major disaster:

Bell, Boyd, Butler, Clay, Harlan, Henderson, Hickman, Johnson, Knott, Knox, Lawrence, Leslie, Letcher, Lewis, Magoffin, McCracken, McCreary, Menifee, Metcalfe, Monroe, Morgan, Owsley, Perry, Pike, Powell, Union, and Whitley Counties for Public Assistance.

All areas within the Commonwealth of Kentucky are eligible for assistance under the Hazard Mitigation Grant Program.

The following Catalog of Federal Domestic Assistance Numbers (CFDA) are to be used for reporting and drawing funds: 97.030, Community Disaster Loans; 97.031, Cora Brown Fund; 97.032, Crisis Counseling; 97.033, Disaster Legal Services; 97.034, Disaster Unemployment Assistance (DUA); 97.046, Fire Management Assistance Grant; 97.048, Disaster Housing Assistance to Individuals and Households In Presidentially Declared Disaster Areas; 97.049, Presidentially Declared Disaster Assistance—Disaster Housing Operations for Individuals and Households; 97.050, Presidentially Declared Disaster Assistance to Individuals and Households—Other Needs; 97.036, Disaster Grants—Public Assistance (Presidentially Declared Disasters); 97.039, Hazard Mitigation Grant.

Pete Gaynor,

Administrator, Federal Emergency Management Agency.

[FR Doc. 2020–11106 Filed 5–21–20; 8:45 am]

BILLING CODE 9111–23–P

DEPARTMENT OF HOMELAND SECURITY

Federal Emergency Management Agency

[Internal Agency Docket No. FEMA–4538–DR; Docket ID FEMA–2020–0001]

Mississippi; Major Disaster and Related Determinations

AGENCY: Federal Emergency Management Agency, DHS.

ACTION: Notice.

SUMMARY: This is a notice of the Presidential declaration of a major disaster for the State of Mississippi (FEMA–4538–DR), dated April 23, 2020, and related determinations.

DATES: The declaration was issued April 23, 2020.

FOR FURTHER INFORMATION CONTACT: Dean Webster, Office of Response and Recovery, Federal Emergency Management Agency, 500 C Street SW, Washington, DC 20472, (202) 646–2833.

SUPPLEMENTARY INFORMATION: Notice is hereby given that, in a letter dated April 23, 2020, the President issued a major disaster declaration under the authority of the Robert T. Stafford Disaster Relief and Emergency Assistance Act, 42 U.S.C. 5121 *et seq.* (the ''Stafford Act''), as follows:

I have determined that the damage in certain areas of the State of Mississippi resulting from severe storms, flooding, and mudslides during the period of February 10 to February 18, 2020, is of sufficient severity and magnitude to warrant a major disaster declaration under the Robert T. Stafford Disaster Relief and Emergency Assistance Act, 42 U.S.C. 5121 *et seq.* (the ''Stafford Act''). Therefore, I declare that such a major disaster exists in the State of Mississippi.

In order to provide Federal assistance, you are hereby authorized to allocate from funds available for these purposes such amounts as you find necessary for Federal disaster assistance and administrative expenses.

You are authorized to provide Public Assistance in the designated areas and Hazard Mitigation throughout the State. Consistent with the requirement that Federal assistance be supplemental, any Federal funds provided under the Stafford Act for Public Assistance and Hazard Mitigation will be limited to 75 percent of the total eligible costs.

Further, you are authorized to make changes to this declaration for the approved assistance to the extent allowable under the Stafford Act.

The Federal Emergency Management Agency (FEMA) hereby gives notice that pursuant to the authority vested in the Administrator, under Executive Order 12148, as amended, Terry L. Quarles, of FEMA is appointed to act as the Federal Coordinating Officer for this major disaster.

The following areas of the State of Mississippi have been designated as adversely affected by this major disaster:

Attala, Carroll, Claiborne, Clay, Copiah, Grenada, Hinds, Holmes, Leflore, Warren, and Yazoo Counties for Public Assistance.

All areas within the State of Mississippi are eligible for assistance under the Hazard Mitigation Grant Program.

The following Catalog of Federal Domestic Assistance Numbers (CFDA) are to be used for reporting and drawing funds: 97.030, Community Disaster Loans; 97.031, Cora Brown Fund; 97.032, Crisis Counseling; 97.033, Disaster Legal Services; 97.034, Disaster Unemployment Assistance (DUA); 97.046, Fire Management Assistance Grant; 97.048, Disaster Housing Assistance to Individuals and Households In Presidentially Declared Disaster Areas; 97.049, Presidentially Declared Disaster Assistance—Disaster Housing Operations for Individuals and Households; 97.050, Presidentially Declared Disaster Assistance to Individuals and Households—Other Needs; 97.036, Disaster Grants—Public Assistance (Presidentially Declared Disasters); 97.039, Hazard Mitigation Grant.

Pete Gaynor,

Administrator, Federal Emergency Management Agency.

[FR Doc. 2020–11104 Filed 5–21–20; 8:45 am]

BILLING CODE 9111–23–P

DEPARTMENT OF HOMELAND SECURITY

Federal Emergency Management Agency

[Docket ID: FEMA–2020–0011; OMB No. 1660–0006]

Agency Information Collection Activities: Submission for OMB Review; Comment Request; National Flood Insurance Program Policy Forms

AGENCY: Federal Emergency Management Agency, DHS.

ACTION: Notice and request for comments.

SUMMARY: The Federal Emergency Management Agency (FEMA), as part of its continuing effort to reduce paperwork and respondent burden, invites the general public to take this opportunity to comment on a reinstatement, with change, of a previously approved information collection for which approval has expired. FEMA will submit the information collection abstracted below to the Office of Management and Budget for review and clearance in accordance with the requirements of the Paperwork Reduction Act of 1995. The submission will describe the nature of the information collection, the categories of respondents, the estimated burden (*i.e.,* the time, effort and resources used by respondents to respond) and cost, and the actual data collection instruments FEMA will use.

DATES: Comments must be submitted on or before June 22, 2020.

ADDRESSES: Written comments and recommendations for the proposed information collection should be sent within 30 days of publication of this notice to *www.reginfo.gov/public/do/PRAMain.* Find this particular information collection by selecting ''Currently under 30-day Review—Open for Public Comments'' or by using the search function.

FOR FURTHER INFORMATION CONTACT: Requests for additional information or copies of the information collection should be made to Director, Information Management Division, 500 C Street SW, Washington, DC 20472, email address *FEMA-Information-Collections-Management@fema.dhs.gov* or Joycelyn Collins, Underwriting Branch Program Analyst, Federal Insurance Directorate, *Joycelyn.Collins@fema.dhs.gov,* 202–212–4716.

SUPPLEMENTARY INFORMATION: The National Flood Insurance Program (NFIP) is authorized by Public Law 90–448 (1968) and expanded by Public Law 93–234 (1973). The National Flood Insurance Act of 1968 requires that the Federal Emergency Management Agency (FEMA) provide flood insurance at full actuarial rates reflecting the complete flood risk to structures built or substantially improved on or after the effective date for the initial Flood Insurance Rate Map for the community, or after December 31, 1974, whichever is later, so that the risks associated with buildings in flood-prone areas are borne by those located in such areas and not by the taxpayers at large. In accordance with Public Law 93–234, the purchase of flood insurance is mandatory when Federal or federally-related financial assistance is being provided for acquisition or construction of buildings located, or to be located, within FEMA-identified special flood hazard areas of communities that participate in the NFIP.

This proposed information collection previously published in the **Federal Register** on February 24, 2020, at 85 FR 10458 with a 60-day public comment period. FEMA received one comment supporting the proposed revisions to this information collection, and one irrelevant comment. This information collection expired on April 30, 2020. FEMA is requesting a reinstatement, with change, of a previously approved information collection for which approval has expired. The purpose of this notice is to notify the public that FEMA will submit the information collection abstracted below to the Office of Management and Budget for review and clearance.

Collection of Information

Title: National Flood Insurance Program Policy Forms.

Type of information collection: Reinstatement, with change, of a previously approved collection for which approval has expired.

OMB Number: 1660–0006.

Form Titles and Numbers: FEMA Form 086–0–1, Flood Insurance Application; FEMA Form 086–0–2, Flood Insurance Cancellation/Nullification Request Form; FEMA Form 086–0–3, Flood Insurance General Change Endorsement; FEMA Form 086–0–4, V-Zone Risk Factor Rating Form and Instructions (discontinued October 16, 2019, due to insufficient use); and

FEMA Form 086–0–5, Flood Insurance Preferred Risk Policy and Newly Mapped Application.

Abstract: In order to provide for the availability of policies for flood insurance, policies are marketed through the facilities of licensed insurance agents or brokers in the various States. Applications from agents or brokers are forwarded to a direct servicing agent designated as fiscal agent by the Federal Insurance and Mitigation Administration (FIMA), referred to as NFIP Direct. Upon receipt and examination of the application and required premium, the servicing company issues the appropriate Federal flood insurance policy.

Affected Public: Individuals or households; State, local or Tribal Government; Business or other for profit; Not-for-profit institutions; and Farms.

Estimated Number of Respondents: 409,781.

Estimated Number of Responses: 409,781.

Estimated Total Annual Burden Hours: 62,196.

Estimated Total Annual Respondent Cost: $2,446,169.

Estimated Respondents' Operation and Maintenance Costs: $0.

Estimated Respondents' Capital and Start-Up Costs: $0.

Estimated Total Annual Cost to the Federal Government: $9,356,398.

Comments

Comments may be submitted as indicated in the **ADDRESSES** caption above. Comments are solicited to (a) evaluate whether the proposed data collection is necessary for the proper performance of the agency, including whether the information shall have practical utility; (b) evaluate the accuracy of the agency's estimate of the burden of the proposed collection of information, including the validity of the methodology and assumptions used; (c) enhance the quality, utility, and clarity of the information to be collected; and (d) minimize the burden of the collection of information on those who are to respond, including through the use of appropriate automated, electronic, mechanical, or other technological collection techniques or other forms of information technology, *e.g.,* permitting electronic submission of responses.

Maile Arthur,

Acting Records Management Branch Chief, Office of the Chief Administrative Officer, Mission Support, Federal Emergency Management Agency, Department of Homeland Security.

[FR Doc. 2020–11046 Filed 5–21–20; 8:45 am]

BILLING CODE 9110–11–P

DEPARTMENT OF THE INTERIOR

Fish and Wildlife Service

[FWS–R8–ES–2020–N039; FF08ESMF00–FXES11140800000–201]

Joint Final Environmental Impact Statement and Environmental Impact Report, Joint Final Habitat Conservation Plan and Natural Community Conservation Plan; Placer County, California

AGENCY: Fish and Wildlife Service, Interior.

ACTION: Notice of availability.

SUMMARY: We, the U.S. Fish and Wildlife Service (FWS), announce the availability of a joint final environmental impact statement and final environmental impact report (final EIS/EIR) under the National Environmental Policy Act of 1967, as amended. We also announce the availability of a final Western Placer County Habitat Conservation Plan and Natural Community Conservation Plan (Final Plan). The National Marine Fisheries Service and U.S. Army Corps of Engineers are cooperating agencies on the final EIS/EIR.

DATES: A record of decision will be signed no sooner than 30 days after the publication of this notice of availability in the **Federal Register**. We must receive any written comments by 5 p.m. on June 22, 2020.

ADDRESSES:

Obtaining Documents: You may obtain electronic copies of the Final Plan and final EIS/EIR from the Sacramento Fish and Wildlife Office website at *http://www.fws.gov/sacramento.* Please use the information in the **FOR FURTHER INFORMATION CONTACT** section below with questions on obtaining documents.

Submitting Comments: Please address written comments to Eric Tattersall, Assistant Field Supervisor, by facsimile to (916) 414–6713; or by mail to U.S. Fish and Wildlife Service, Sacramento Fish and Wildlife Office, 2800 Cottage Way, W–2605, Sacramento, California 95825.

FOR FURTHER INFORMATION CONTACT: Stephanie Jentsch, Senior Biologist, Conservation Planning Division; or Eric Tattersall, Assistant Field Supervisor, at the Sacramento Fish and Wildlife Office address above or by telephone at (916) 414–6600. If you use a telecommunications device for the deaf, hard-of-hearing, or speech disabled, please call the Federal Relay Service at 800–877–8339.

SUPPLEMENTARY INFORMATION: The County of Placer, City of Lincoln, South Placer Regional Transportation Authority, Placer County Water Agency, and the Placer County Authority (PCA) (collectively, the applicants) have applied for a 50-year incidental take permit (ITP) under the Endangered Species Act of 1973, as amended (ESA; 16 U.S.C. 1531 *et seq.*). The applicants prepared the Final Plan pursuant to section 10(a)(1)(B) of the ESA and the California Natural Community Conservation Planning Act of 2002 (NCCPA).

Background

Section 9 of the ESA (16 U.S.C. 1531–1544 *et seq.*) and Federal regulations (50 CFR 17) prohibit the taking of fish and wildlife species listed as endangered, and certain species listed as threatened under section 4 of the ESA. Regulations governing permits for endangered and threatened species are at 50 CFR 17.22 and 17.32. For more about the Federal habitat conservation plan program, go to *http://www.fws.gov/endangered/esa-library/pdf/hcp.pdf.* As cooperating agencies, NMFS may use the EIS analysis to support a decision as to whether to issue an ITP to the applicants, and the Corps may use the EIS analysis to support decisions made associated with implementing the Clean Water Act (33 U.S.C. 1251 *et seq.*).

NEPA requires Federal agencies to analyze their proposed actions to determine whether the actions may significantly affect the human environment. In these NEPA analyses, the Federal agency will identify direct, indirect, and cumulative effects, as well as possible mitigation for effects on environmental resources that could occur with implementation of the proposed action and alternatives.

Proposed Action

The FWS and NMFS would issue an ITP to the applicants for a period of 50 years for certain covered activities (listed below). The applicants have requested ITPs for 14 covered animal species (listed below), of which 7 are listed as endangered or threatened under the ESA.

Plan Area

The geographic scope of the Final Plan includes two plan areas. Plan Area A encompasses approximately 209,000 acres of the City of Lincoln and unincorporated lands in western Placer County and is the focus of the Final Plan. Plan Area B includes additional specific areas in Placer and Sutter Counties that are not included in Plan Area A. Combined, Plan Areas A and B cover approximately 260,000 acres.

Covered Activities

The proposed section 10 ITPs would allow take of 14 covered species resulting from covered activities in the proposed plan area. The applicants are requesting incidental take authorization for covered species resulting from covered activities, including urban and rural development, water management, conservation measures, and facilities maintenance. A complete description of the covered activities is provided in the Final Plan, Chapter 2. The applicants are also proposing to implement a number of project design features, including best management practices, as well as general and species-specific avoidance and minimization measures to minimize the impacts of the take from the covered activities.

Covered Species

The following wildlife species federally listed as endangered are proposed to be covered by the Final Plan: Conservancy fairy shrimp (*Branchinecta conservatio*) and vernal pool tadpole shrimp (*Lepidurus packardi*). The following wildlife species federally listed as threatened are proposed to be covered by the Final Plan: Giant garter snake (*Thamnophis gigas*), California red-legged frog (*Rana draytonii*), valley elderberry longhorn beetle (*Desmocerus californicus dimorphus*), and vernal pool fairy shrimp (*Branchinecta lynchi*). The following wildlife species that are not federally listed are also proposed to be covered by the Final Plan: Swainson's hawk (*Buteo swainsoni*), California black rail (*Laterallus jamaicensis coturniculus*), western burrowing owl (*Athene cunicularia hypugaea*), tricolored blackbird (*Agelaius tricolor*), western pond turtle (*Actinemys marmorata*), and foothill yellow-legged frog (*Rana boylii*).

Two species of fish are proposed to be covered by the Final Plan under an ITP from NMFS: The Central Valley steelhead (distinct population segment; *Oncorhynchus mykiss irideus*), which is federally listed as threatened; and the Central Valley fall/late-fall run Chinook salmon (evolutionarily significant unit; *Oncorhynchus tshawytscha*), which is not listed.

National Environmental Policy Act Compliance

The final EIS/EIR was prepared to analyze the impacts of issuing an ITP based on the Final Plan and to inform the public of the proposed action, alternatives, and associated impacts and to disclose any irreversible commitments of resources. The final EIS/EIR analyzes three alternatives in addition to the proposed action described above. The other alternatives include a no-action (*i.e.,* no ITP) alternative, a reduced take/reduced fill alternative, and a reduced permit term alternative, and are all described in the Final EIS/EIR. The final EIS/EIR also includes all comments received on the draft EIS/EIR, draft HCP/NCCP, and responses to those comments.

Public Review

The FWS published a notice of intent to prepare a joint EIS/EIR in the **Federal Register** on March 7, 2005 (70 FR 11022), announcing a 30-day public scoping period, during which the public was invited to provide written comments and attend three public meetings. The FWS published a notice of availability of the draft EIS/EIR and draft HCP/NCCP in the **Federal Register** on June 21, 2019 (84 FR 29224), announcing a 60-day public comment period, during which the public was invited to provide written comments and attend two public meetings.

Copies of the final EIS/EIR and Final Plan are available for inspection (see **ADDRESSES**). Any comments we receive will become part of the public record. Before including your address, phone number, email address, or other personal identifying information in your comment, you should be aware that your entire comment—including your personal identifying information—may be made publicly available at any time. While you can ask us in your comment to withhold your personal identifying information from public review, we cannot guarantee that we will be able to do so.

Next Steps

Issuance of an incidental take permit is a Federal proposed action subject to compliance with NEPA and the ESA. The FWS and NMFS will evaluate the application, associated documents, and any public comments we receive to determine whether the application meets the requirements of NEPA regulations and sections 7 and 10(a) of the ESA. If FWS and NMFS determine that those requirements are met, we will issue a permit to the applicants for the incidental take of the Covered Species.

Authority

We issue this notice pursuant to section 10(c) of the ESA (16 U.S.C. 1531 *et seq.*) and its implementing regulations (50 CFR 17.22 and 17.32), and the National Environmental Policy Act (42 U.S.C. 4321 *et seq.*) and its implementing regulations (40 CFR 1506.6 and 43 CFR 46.305).

Michael Fris,

Assistant Regional Director, Pacific Southwest Region, Sacramento.

[FR Doc. 2020–10401 Filed 5–21–20; 8:45 am]

BILLING CODE 4333–15–P

DEPARTMENT OF THE INTERIOR

Fish and Wildlife Service

[Docket No. FWS–HQ–IA–2020–0031; FXIA16710900000–201–FF09A30000]

Foreign Endangered Species; Marine Mammals; Receipt of Permit Applications

AGENCY: Fish and Wildlife Service, Interior.

ACTION: Notice of receipt of permit applications; request for comments.

SUMMARY: We, the U.S. Fish and Wildlife Service (Service), invite the public to comment on applications to conduct certain activities with foreign species that are listed as endangered under the Endangered Species Act (ESA) and foreign or native species for which the Service has jurisdiction under the Marine Mammal Protection Act (MMPA). With some exceptions, the ESA and the MMPA prohibit activities with listed species unless Federal authorization is issued that allows such activities. The ESA and MMPA also require that we invite public comment before issuing permits for any activity otherwise prohibited by the ESA or MMPA with respect to any endangered species or marine mammals.

DATES: We must receive comments by June 22, 2020.

ADDRESSES:

Obtaining Documents: The applications, application supporting materials, and any comments and other materials that we receive will be available for public inspection at *http://www.regulations.gov* in Docket No. FWS–HQ–IA–2020–0031.

Submitting Comments: When submitting comments, please specify the name of the applicant and the permit number at the beginning of your

comment. You may submit comments by one of the following methods:

- *Internet: http://www.regulations.gov.* Search for and submit comments on Docket No. FWS–HQ–IA–2020–0031.
- *U.S. mail:* Public Comments Processing, Attn: Docket No. FWS–HQ–IA–2020–0031; U.S. Fish and Wildlife Service Headquarters, MS: PRB/3W; 5275 Leesburg Pike; Falls Church, VA 22041–3803.

For more information, see Public Comment Procedures under **SUPPLEMENTARY INFORMATION**.

FOR FURTHER INFORMATION CONTACT: Monica Thomas, by phone at 703–358–2185, via email at *DMAFR@fws.gov,* or via the Federal Relay Service at 800–877–8339.

SUPPLEMENTARY INFORMATION:

I. Public Comment Procedures

A. How do I comment on submitted applications?

We invite the public and local, State, Tribal, and Federal agencies to comment on these applications. Before issuing any of the requested permits, we will take into consideration any information that we receive during the public comment period.

You may submit your comments and materials by one of the methods in **ADDRESSES**. We will not consider comments sent by email or fax, or to an address not in **ADDRESSES**. We will not consider or include in our administrative record comments we receive after the close of the comment period (see **DATES**).

When submitting comments, please specify the name of the applicant and the permit number at the beginning of your comment. Provide sufficient information to allow us to authenticate any scientific or commercial data you include. The comments and recommendations that will be most useful and likely to influence agency decisions are: (1) Those supported by quantitative information or studies; and (2) those that include citations to, and analyses of, the applicable laws and regulations.

B. May I review comments submitted by others?

You may view and comment on others' public comments at *http://www.regulations.gov,* unless our allowing so would violate the Privacy Act (5 U.S.C. 552a) or Freedom of Information Act (5 U.S.C. 552).

C. Who will see my comments?

If you submit a comment at *http://www.regulations.gov,* your entire comment, including any personal identifying information, will be posted on the website. If you submit a hardcopy comment that includes personal identifying information, such as your address, phone number, or email address, you may request at the top of your document that we withhold this information from public review. However, we cannot guarantee that we will be able to do so. Moreover, all submissions from organizations or businesses, and from individuals identifying themselves as representatives or officials of organizations or businesses, will be made available for public disclosure in their entirety.

II. Background

To help us carry out our conservation responsibilities for affected species, and in consideration of section 10(c) of the Endangered Species Act of 1973, as amended (ESA; 16 U.S.C. 1531 *et seq.*), and section 104(c) of the Marine Mammal Protection Act of 1972, as amended (MMPA; 16 U.S.C. 1361 *et seq.*), we invite public comments on permit applications before final action is taken. With some exceptions, the ESA and MMPA prohibit certain activities with listed species unless Federal authorization is issued that allows such activities. Permits issued under section 10(a)(1)(A) of the ESA allow otherwise prohibited activities for scientific purposes or to enhance the propagation or survival of the affected species. Service regulations regarding prohibited activities with endangered species, captive-bred wildlife registrations, and permits for any activity otherwise prohibited by the ESA with respect to any endangered species are available in title 50 of the Code of Federal Regulations in part 17. Service regulations regarding permits for any activity otherwise prohibited by the MMPA with respect to any marine mammals are available in title 50 of the Code of Federal Regulations in part 18. Concurrent with publishing this notice in the **Federal Register**, we are forwarding copies of the marine mammal application to the Marine Mammal Commission and the Committee of Scientific Advisors for their review.

III. Permit Applications

We invite comments on the following applications.

A. Endangered Species

Applicant: NRCAN Natural Resource Canada c/o U.S. Fish and Wildlife Service Maine Field Office, East Orland, ME; Permit No. 53601D

The applicant requests authorization to export to Canada wild furbish lousewort (*Pedicularis furbishiae*) seeds collected in Maine for the purpose of enhancing the propagation or survival of the species. This notification covers activities to be conducted by the applicant over a 5-year period.

Applicant: Chicago Botanic Garden, Glencoe, IL; Permit No. 69662D

The applicant requests authorization to import seed and pollen of the Olulu plant (*Brighamia insignis*) from multiple botanic institutions for the purpose of enhancing the propagation or survival of the species. This notification covers activities to be conducted by the applicant over a 5-year period.

Applicant: University of Massachusetts Amherst, Amherst, MA; Permit No. 63307D

The applicant requests authorization to import biological samples derived from wild Verreaux's sifakas (*Propithecus verreauxi*), ring-tailed lemurs (*Lemur catta*), and red-and-gray mouse lemurs (*Microcebus griseorufus*), taken in Madagascar, for the purpose of scientific research. This notification covers activities to be conducted by the applicant over a 5-year period.

Applicant: Tony Goldberg, Madison, WI; Permit No. 56953D

The applicant requests a permit to import biological samples derived from wild and captive-born common chimpanzees (*Pan troglodytes*), taken in the Republic of Congo, for the purpose of scientific research. This notification is for a single import.

Applicant: Columbus Zoo and Aquarium, Powell, OH; Permit No. 60002D

The applicant requests authorization to import biological samples derived from wild black-and-white ruffed lemurs (*Varecia variegata*), taken in Madagascar, for the purpose of scientific research. This notification covers activities to be conducted by the applicant over a 5-year period.

Applicant: Graham Banes, University of Wisconsin-Madison, Madison, WI; Permit No. 93299C

The applicant requests authorization to import biological samples from captive-bred and wild orangutans (*Pongo pygmaeus* and *Pongo abelii*)

from multiple locations for the purpose of enhancing the propagation or survival of the species through scientific research. This notification covers activities to be conducted by the applicant over a 5-year period.

Applicant: Jordana Meyer, Stanford University, Stanford, CA; Permit No. 55307D

The applicant requests authorization to import biological samples from wild African elephants (*Loxodonta africana*) taken in Garamba National Park, Republic of Congo, for the purpose of enhancing the propagation or survival of the species through scientific research. This notification is for a single import.

Applicant: St. Augustine Alligator Farm, St. Augustine, FL; Permit No. 15196D

The applicant requests a captive-bred wildlife registration under 50 CFR 17.21(g) for the following species, to enhance the propagation or survival of the species. This notification covers activities to be conducted by the applicant over a 5-year period.

Common name	Scientific name
Cabot's tragopan pheasant.	*Tragopan caboti.*
Komodo island monitor	*Varanus komodoensis.*
Congo dwarf crocodile	*Osteolaemus tetraspis osborni.*
African dwarf crocodile	*Osteolaemus tetraspis.*
Chinese alligator	*Alligator sinensis.*
Blue-throated macaw	*Ara glaucogularis.*
Siamese crocodile	*Crocodylus siamensis.*

Applicant: Bright and Associates, LLC, dba Bright's Zoo, Limestone, TN; Permit No. 51201D

The applicant requests a captive-bred wildlife registration under 50 CFR 17.21(g) for the following species, to enhance the propagation or survival of the species. This notification covers activities to be conducted by the applicant over a 5-year period.

Common name	Species name
Jackass penguin	*Spheniscus demersus.*
Baird's tapir	*Tapirus bairdii.*
Cotton-top tamarin	*Saguinus oedipus.*
Galapagos tortoise	*Chelonoidis niger.*
Radiated tortoise	*Astrochelys radiata.*
Lar gibbon	*Hylobates lar.*

Applicant: Mississippi Aquarium, Gulfport, MS; Permit No. 59433D

The applicant requests a captive-bred wildlife registration under 50 CFR 17.21(g) for jackass penguins (*Spheniscus demersus*) to enhance the propagation or survival of the species. This notification covers activities to be conducted by the applicant over a 5-year period.

Applicant: Peoria Zoo at Glen Oak Park, Peoria, IL; Permit No. 59321D

The applicant requests a captive-bred wildlife registration under 50 CFR 17.21(g) for the following species, to enhance the propagation or survival of the species. This notification covers activities to be conducted by the applicant over a 5-year period.

Common name	Species name
Chinese alligator	*Alligator sinensis.*
Panamanian golden frog	*Atelopus zeteki.*
Mongoose lemur	*Eulemur mongoz.*
Galapagos tortoise	*Chelonoidis niger.*
Ring-tailed lemur	*Lemur catta.*
Mandrill	*Mandrillus sphinx.*
Siberian tiger	*Panthera tigris altaica.*
Cotton-top tamarin	*Saguinus oedipus.*

Applicant: Chattanooga Zoo, Chattanooga, TN; Permit No. 56470D

The applicant requests a captive-bred wildlife registration under 50 CFR 17.21(g) for snow leopards (*Uncia uncia*) to enhance the propagation or survival of the species. This notification covers activities to be conducted by the applicant over a 5-year period.

Applicant: Steve Martin's Natural Encounters, Inc., Winter Haven, FL; Permit No. 42547B

The applicant requests a captive-bred wildlife registration under 50 CFR 17.21(g) for blue-throated macaw (*Ara glaucogularis*), to enhance the propagation or survival of the species. This notification covers activities to be conducted by the applicant over a 5-year period.

Applicant: Ox Ranch Investments LLC dba Ox Hunting Ranch, Uvalde, TX; Permit No. 10867B

The applicant requests a captive-bred wildlife registration under 50 CFR 17.21(g) for the following species, to enhance the propagation or survival of the species. This notification covers activities to be conducted by the applicant over a 5-year period.

Common name	Species name
Eld's brow-antlered deer	*Cervus eldi.*
Arabian oryx	*Oryx leucoryx.*
Swamp deer	*Cervus duvauceli.*

Applicant: William Porter, Fort Denaud, FL; Permit No. 08333D

The applicant requests a captive-bred wildlife registration under 50 CFR 17.21(g) for the following species, to enhance the propagation or survival of the species. This notification covers activities to be conducted by the applicant over a 5-year period.

Common name	Scientific name
Madagascar radiated tortoise.	*Geochelone radiata.*
Galapagos tortoise	*Geochelone nigra.*
Blue-throated macaw	*Ara glaucogularis.*
St. Vincent parrot	*Amazona guildingii.*
Cuban parrot	*Amazona leucocephala.*
White cockatoo	*Cacatua alba.*
Philippine cockatoo	*Cacatua haematuropygia.*
Salmon-crested cockatoo	*Cacatua moluccensis.*

Applicant: UC Davis Center for Plant Diversity, Davis, CA; Permit No. 60226D

The applicant requests authorization to export and reimport nonliving museum plant specimens of endangered species previously accessioned into the applicant's collection for scientific research. This notification covers activities to be conducted by the applicant over a 5-year period.

Applicant: Ox Ranch Investments LLC dba Ox Hunting Ranch, Uvalde, TX; Permit No. 10866B

The applicant requests a permit authorizing the culling of excess Eld's brow-antlered deer (*Rucervus eldi*), Arabian oryx (*Oryx leucoryx*), and swamp deer (*Rucervus duvauceli*) from the captive herd maintained at their facility, to enhance the species' propagation and survival. This notification covers activities to be conducted by the applicant over a 5-year period.

Applicant: Jeff Demaske, Greeley, CO; Permit No. 55199D

The applicant requests a permit to import a sport hunted trophy of a hyena (*Parahyaena brunnea*) from Zimbabwe for the purpose of enhancing the propagation or survival of the species. This notification is for a single import.

Applicant: Wayne P. Johnson, Long Beach, MS; Permit No. 71738D

The applicant requests a permit to import a sport-hunted trophy of a male scimitar-horned oryx (*Oryx dammah*) culled from a captive herd maintained in South Africa, to enhance the species' propagation and survival.

Richard Roark, Marshall, TX; Permit No. 72865D

The applicant requests a permit to import a sport-hunted trophy of one sport-hunted trophy of male bontebok (*Damaliscus pygargus pygargus*) culled from a captive herd maintained under the management program of the Republic of South Africa, for the purpose of enhancing the propagation or survival of the species.

B. Endangered Marine Mammals and Marine Mammals

Applicant: Wild Space Productions, Pacific Grove, CA Permit No. 62285D

The applicant requests a permit to photograph southern sea otters (*Enhydra lutris nereis*) along the coast of California, at the locations listed below, for the purpose of enhancement of the survival of the species through educational photography.

- Monterey Harbour
- Cannery Row, Pacific Grove stretch
- Monterey Bay Inn, Cannery Row
- Pebble Beach (Point Joe—within Pebble Beach)
- Point Lobos (using boat launch Whalers Cove)
- Monterey Bay Aquarium: Hopkins Marine Station
- Carmel Beach, Carmel-by-the-Sea
- Sandshell Beach—behind Cypress Point
- Otter Point—Perkins Park, Pacific Grove
- Berwick Park
- Elkhorn Slough
- Moss Landing Harbor
- Pescadero

This notification covers activities to be conducted by the applicant over a 5-year period.

IV. Next Steps

After the comment period closes, we will make decisions regarding permit issuance. If we issue permits to any of the applicants listed in this notice, we will publish a notice in the **Federal Register**. You may locate the notice announcing the permit issuance by searching *http://www.regulations.gov* for the permit number listed above in this document. For example, to find information about the potential issuance of Permit No. 12345A, you would go to regulations.gov and search for ''12345A''.

V. Authority

We issue this notice under the authority of the Endangered Species Act of 1973, as amended (16 U.S.C. 1531 *et seq.*), and its implementing regulations, and the Marine Mammal Protection Act of 1972, as amended (16 U.S.C. 1361 *et seq.*), and its implementing regulations.

Monica Thomas,

Management Analyst, Branch of Permits, Division of Management Authority.

[FR Doc. 2020–11078 Filed 5–21–20; 8:45 am]

BILLING CODE 4333–15–P

DEPARTMENT OF THE INTERIOR

Fish and Wildlife Service

[FWS–R6–ES–2020–N044; FXES11130600000–201–FF06E00000]

Endangered and Threatened Species; Receipt of Recovery Permit Applications

AGENCY: Fish and Wildlife Service, Interior.

ACTION: Notice of receipt of permit applications; request for comments.

SUMMARY: We, the U.S. Fish and Wildlife Service, have received applications for permits to conduct activities intended to enhance the propagation or survival of endangered species under the Endangered Species Act. We invite the public and local, State, Tribal, and Federal agencies to comment on these applications. Before issuing any of the requested permits, we will take into consideration any information that we receive during the public comment period.

DATES: We must receive your written comments by June 22, 2020.

ADDRESSES: *Document availability and comment submission:* Use one of the following methods to request documents or submit comments. Requests and comments should specify the applicant name(s) and application number(s) (*e.g.,* TE123456):

- *Email: permitsR6ES@fws.gov.*
- *U.S. Mail:* Marjorie Nelson, Chief, Division of Ecological Services, U.S. Fish and Wildlife Service, 134 Union Blvd., Suite 670, Lakewood, CO 80228.

FOR FURTHER INFORMATION CONTACT: Kathy Konishi, Recovery Permits Coordinator, Ecological Services, 303–236–4224 (phone), or *permitsR6ES@fws.gov* (email). Individuals who are hearing or speech impaired may call the Federal Relay Service at 1–800–877–8339 for TTY assistance.

SUPPLEMENTARY INFORMATION:

Background

The Endangered Species Act of 1973, as amended (ESA; 16 U.S.C. 1531 *et seq.*), prohibits certain activities with endangered and threatened species unless authorized by a Federal permit. The ESA and our implementing regulations in part 17 of title 50 of the Code of Federal Regulations (CFR) provide for the issuance of such permits and require that we invite public comment before issuing permits for activities involving endangered species.

A recovery permit issued by us under section 10(a)(1)(A) of the ESA authorizes the permittee to conduct activities with endangered species for scientific purposes that promote recovery or for enhancement of propagation or survival of the species. Our regulations implementing section 10(a)(1)(A) for these permits are found at 50 CFR 17.22 for endangered wildlife species, 50 CFR 17.32 for threatened wildlife species, 50 CFR 17.62 for endangered plant species, and 50 CFR 17.72 for threatened plant species.

Permit Applications Available for Review and Comment

We invite local, State, and Federal agencies; Tribes; and the public to comment on the following applications.

Application No.	Applicant	Species	Location	Take activity	Permit action
TE183430–3	Headwaters Corporation, Kearney, NE.	• Interior least tern (*Sternula antillarum athalassos*).	NE	Pursue for presence/absence surveys, nest monitoring, habitat management.	Renew.
TE045150–4	Oklahoma State University, Stillwater, OK.	• American burying beetle (*Nicrophorus americanus*).	NE, SD, KS, OK, AR, TX.	Pursue for presence/absence surveys. Hold in captivity for captive breeding and rearing, for reintroduction purposes.	Renew.

Public Availability of Comments

Written comments we receive become part of the administrative record. Before including your address, phone number, email address, or other personal identifying information in your comment, you should be aware that your entire comment—including your personal identifying information—may be made publicly available at any time. While you can request in your comment that we withhold your personal identifying information from public review, we cannot guarantee that we will be able to do so. All submissions

from organizations or businesses, and from individuals identifying themselves as representatives or officials of organizations or businesses, will be made available for public disclosure in their entirety.

Next Steps

If we decide to issue permits to any of the applicants listed in this notice, we will publish a notice in the **Federal Register**.

Authority

We publish this notice under section 10(c) of the Endangered Species Act of 1973, as amended (16 U.S.C. 1531 *et seq.*).

Stephen Small,

Assistant Regional Director, U.S. Fish and Wildlife Service, Department of the Interior Regions 5 and 7.

[FR Doc. 2020–11071 Filed 5–21–20; 8:45 am]

BILLING CODE 4333–15–P

DEPARTMENT OF THE INTERIOR

Bureau of Land Management

[LLCO956000 L14400000.BJ0000 20X]

Notice of Filing of Plats of Survey, Colorado

AGENCY: Bureau of Land Management, Interior.

ACTION: Notice of official filing.

SUMMARY: The plats of survey of the following described lands are scheduled to be officially filed in the Bureau of Land Management (BLM), Colorado State Office, Lakewood, Colorado, 30 calendar days from the date of this publication. The surveys, which were executed at the request of the BLM, are necessary for the management of these lands.

DATES: Unless there are protests of this action, the plats described in this notice will be filed on June 22, 2020.

ADDRESSES: You may submit written protests to the BLM Colorado State Office, Cadastral Survey, 2850 Youngfield Street, Lakewood, CO 80215–7210.

FOR FURTHER INFORMATION CONTACT: Randy Bloom, Chief Cadastral Surveyor for Colorado, (303) 239–3856; *rbloom@blm.gov.* Persons who use a telecommunications device for the deaf may call the Federal Relay Service at 1–800–877–8339 to contact the above individual during normal business hours. The Service is available 24 hours a day, seven days a week, to leave a message or question with the above individual. You will receive a reply during normal business hours.

SUPPLEMENTARY INFORMATION: The plat, in 3 sheets, incorporating the field notes of the dependent resurvey and subdivision of section 31 in Township 16 South, Range 67 West, Sixth Principal Meridian, Colorado, was accepted on April 23, 2020.

The plat and field notes of the dependent resurvey and survey in Township 6 South, Range 99 West, Sixth Principal Meridian, Colorado, was accepted on May 12, 2020.

A person or party who wishes to protest any of the above surveys must file a written notice of protest within 30 calendar days from the date of this publication at the address listed in the **ADDRESSES** section of this notice. A statement of reasons for the protest may be filed with the notice of protest and must be filed within 30 calendar days after the protest is filed. If a protest against the survey is received prior to the date of official filing, the filing will be stayed pending consideration of the protest. A plat will not be officially filed until the day after all protests have been dismissed or otherwise resolved.

Before including your address, phone number, email address, or other personal identifying information in your protest, please be aware that your entire protest, including your personal identifying information, may be made publicly available at any time. While you can ask us in your comment to withhold your personal identifying information from public review, we cannot guarantee that we will be able to do so.

Authority: 43 U.S.C. Chap. 3.

Randy A. Bloom,

Chief Cadastral Surveyor.

[FR Doc. 2020–11123 Filed 5–21–20; 8:45 am]

BILLING CODE 4310–JB–P

DEPARTMENT OF THE INTERIOR

Bureau of Reclamation

[RR03240000, XXXR4079V4, RX122562102010000]

Termination of Notice of Intent To Prepare an Environmental Impact Statement for the Navajo Generating Station-Kayenta Mine Complex

AGENCY: Bureau of Reclamation, Interior.

ACTION: Notice.

SUMMARY: The Bureau of Reclamation (Reclamation) is terminating preparation of an Environmental Impact Statement (EIS) for the Navajo Generating Station-Kayenta Mine Complex (NGS–KMC). The proposed action was modified in 2017, and Reclamation determined that an Environmental Assessment (EA) rather than an EIS was the appropriate level of environmental documentation for the modified proposed action. An EA was prepared on an Extension Lease by Reclamation and the Bureau of Indian Affairs (BIA)-Navajo Region as joint lead agencies. Signed Findings of No Signficiant Impact (FONSI) were announced to the public on November 30, 2017.

FOR FURTHER INFORMATION CONTACT: Ms. Leslie Meyers, Bureau of Reclamation, Phoenix Area Office, 6150 West Thunderbird Road, Glendale, AZ 85306–4001; telephone (623) 773–6211; facsimile (623) 773–6480; email *lmeyers@usbr.gov.* Persons who use a telecommunications device for the deaf may call the Federal Relay Service (Fed Relay) at 1–800–877–8339 TTY/ASCII to contact the above individual during normal business hours or to leave a message or question(s) after hours. You will receive a reply during normal business hours.

SUPPLEMENTARY INFORMATION: Pursuant to the National Environmental Policy Act (NEPA) of 1969, as amended, 42 U.S.C. 4231–4347; the Council on Environmental Quality's Regulations for Implementing the Procedural Provisions of NEPA, 40 CFR parts 1500 through 1508; and the Department of the Interior's regulations, 43 CFR part 46, a Notice of Intent to prepare the EIS for the NGS–KMC Project was published in the **Federal Register** on May 16, 2014 (79 FR 28546). Under the proposed action, Reclamation and other federal agencies would provide federal approvals and/or decisions necessary to continue the operation and maintenance of the NGS–KMC facilities through December 2044.

Publication of the **Federal Register** notice was followed with a public scoping period that ended on July 7, 2014. The Draft EIS was made available for public review and comment from September 30 to December 29, 2016.

On February 13, 2017, the utility owners of NGS–KMC (Lessees) issued a statement indicating they no longer intended to operate NGS–KMC after expiration of the existing 1969 Lease, on December 22, 2019, citing the rapidly changing economics of the energy industry. The statement also confirmed the Lessees would be willing to operate NGS–KMC through December 2019, if all necessary agreements were reached with the Navajo Nation, to allow for retirement of NGS–KMC within 5 years. The EIS proposed action was modified and Reclamation determined that an EA, rather than an EIS, was the appropriate

level of environmental documentation for the modified proposed action.

Background

The 1969 Lease allowed one additional year after December 2019 for retirement of NGS–KMC. Subsequent planning studies indicated 2 or more years would likely be required to complete this work. In addition, 30 years of post-closure testing, monitoring, and reporting (post-closure activities) would be required. The Lessees along with the Navajo Nation agreed to a new lease, called the Extension Lease, which would enable NGS–KMC to continue to operate through December 22, 2019, and allow up to 5 years to complete retirement activities, and allow up to an additional 30 years for implementing post-closure activities. The Extension Lease became effective on December 1, 2017, following the Department of the Interior approvals.

Reclamation and BIA-Navajo Region issued an EA and draft FONSIs for public comment beginning October 5, 2017. Comments from 10 entities were received. Reclamation and BIA-Navajo Region issued final signed FONSIs on November 27, and November 28, respectively. The Extension Lease and all accompanying documents were signed by then Principal Deputy Assistant Secretary for Indian Affairs on November 29, 2017. The *Final Environmental Assessment For The Navajo Generating Station Extension Lease* and the *Final Finding of No Significant Impact for the Navajo Generating Station Extension Lease* were announced to the public on November 30, 2017; therefore, the completion of the original EIS has been cancelled.

Dated: May 18, 2020.

Stacy L. Wade,

Deputy Regional Director, Interior Region 8: Lower Colorado Basin, Bureau of Reclamation.

[FR Doc. 2020–11048 Filed 5–21–20; 8:45 am]

BILLING CODE 4332–90–P

INTERNATIONAL TRADE COMMISSION

[Investigation No. 332–352]

Andean Trade Preference Act: Impact on U.S. Industries and Consumers and on Drug Crop Eradication and Crop Substitution

AGENCY: United States International Trade Commission.

ACTION: Notice of opportunity to submit information relating to matters to be addressed in the Commission's 19th report on the impact of the Andean Trade Preference Act (ATPA).

SUMMARY: Section 206 of the ATPA requires the Commission to report biennially to the Congress and the President by September 30 of each reporting year on the economic impact of the Act on U.S. industries and U.S. consumers, and on the effectiveness of the Act in promoting drug-related crop eradication and crop substitution efforts by beneficiary countries. The Commission prepares these reports under Investigation No. 332–352, *Andean Trade Preference Act: Impact on U.S. Industries and Consumers and on Drug Crop Eradication and Crop Substitution.*

DATES:

June 8, 2020: Deadline for filing written submissions.

July 31, 2020: Transmittal of Commission report to Congress and the President.

ADDRESSES: All Commission offices, including the Commission's hearing rooms, are located in the United States International Trade Commission Building, 500 E Street SW, Washington, DC. All written submissions should be addressed to the Secretary, United States International Trade Commission, 500 E Street SW, Washington, DC 20436. The public record for this investigation may be viewed on the Commissions electronic docket (EDIS) at *https://edis.usitc.gov.*

FOR FURTHER INFORMATION CONTACT: Justino De La Cruz, Project Leader, Office of Economics (*Justino.delacruz@usitc.gov* or 202–205–3252) for information specific to this investigation. For information on the legal aspects of this investigation, contact William Gearhart of the Commission's Office of the General Counsel (*william.gearhart@usitc.gov* or 202–205–3091). The media should contact Peg O'Laughlin, Office of External Relations (*margaret.olaughlin@usitc.gov* or 202–205–1819). Hearing-impaired individuals may obtain information on this matter by contacting the Commission's TDD terminal at 202–205–1810. General information concerning the Commission may also be obtained by accessing its website (*https://www.usitc.gov/*). Persons with mobility impairments who will need special assistance in gaining access to the Commission should contact the Office of the Secretary at 202–205–2000.

Background: Section 206 of the Andean Trade Preference Act (ATPA) (19 U.S.C. 3204) requires that the Commission submit biennial reports to the Congress and the President regarding the economic impact of the Act on U.S. industries and consumers and, in conjunction with other agencies, the effectiveness of the Act in promoting drug-related crop eradication and crop substitution efforts of the beneficiary countries. Section 206(b) of the Act requires that each report include:

(1) The actual effect of ATPA on the U.S. economy generally as well as on specific domestic industries which produce articles that are like, or directly competitive with, articles being imported under the Act from beneficiary countries;

(2) The probable future effect that ATPA will have on the U.S. economy generally and on such domestic industries; and

(3) The estimated effect that ATPA has had on drug-related crop eradication and crop substitution efforts of beneficiary countries.

Under the statute the Commission is required to prepare this report regardless of whether preferential treatment was provided during the period covered by the report. The President's authority to provide preferential treatment under ATPA expired on July 31, 2013. During the period to be covered by this report, calendar years 2018 and 2019, no imports entering the United States should have received preferential treatment under the ATPA program.

The Commission will submit its report by July 31, 2020. The initial notice announcing institution of this investigation for the purpose of preparing these reports was published in the **Federal Register** of March 10, 1994 (59 FR 11308). Notice providing opportunity to file written submissions in connection with the eighteenth report was published in the **Federal Register** of August 3, 2018 (83 FR 38176).

Written Submissions: Interested parties are invited to file written submissions concerning this investigation. All written submissions should be addressed to the Secretary, and should be received not later than 5:15 p.m., June 8, 2020. All written submissions must conform to the provisions of section 201.8 of the Commission's Rules of Practice and Procedure (19 CFR 201.8), as temporarily amended by 85 FR 15798 (March 19, 2020). Under that rule waiver, the Office of the Secretary will accept only electronic filings at this time. Filings must be made through the Commission's Electronic Document Information System (EDIS, *https://edis.usitc.gov*). No in-person paper-based filings or paper copies of any electronic filings will be accepted until

further notice. Persons with questions regarding electronic filing should contact the Office of the Secretary, Docket Services Division (202–205–1802) or consult the Commission's Handbook on Filing Procedures.

Confidential Business Information. Any submissions that contain confidential business information must also conform to the requirements of section 201.6 of the Commission's Rules of Practice and Procedure (19 CFR 201.6). Section 201.6 of the rules requires that the cover of the document and the individual pages be clearly marked as to whether they are the ''confidential'' or ''nonconfidential'' version, and that the confidential business information is clearly identified by means of brackets. All written submissions, except for confidential business information, will be made available for inspection by interested parties.

The Commission will not include any confidential business information in the report that it sends to the President and the Congress. However, all information, including confidential business information, submitted in this investigation may be disclosed to and used: (i) By the Commission, its employees and Offices, and contract personnel (a) for developing or maintaining the records of this or a related proceeding, or (b) in internal investigations, audits, reviews, and evaluations relating to the programs, personnel, and operations of the Commission including under 5 U.S.C. Appendix 3; or (ii) by U.S. government employees and contract personnel (a) for cybersecurity purposes or (b) in monitoring user activity on U.S. government classified networks. The Commission will not otherwise disclose any confidential business information in a way that would reveal the operations of the firm supplying the information.

Summaries of Written Submissions: Persons wishing to have a summary of their position included in the report should include a summary with their written submission and should mark the summary as having been provided for that purpose. The summary should be clearly marked as ''summary for inclusion in the report'' at the top of the page. The summary may not exceed 500 words, should be in MS Word format or a format that can be easily converted to MS Word, and should not include any confidential business information. The summary will be published as provided if it meets these requirements and is germane to the subject matter of the investigation. The Commission will list the name of the organization furnishing the summary and will include a link to the Commission's Electronic Document Information System (EDIS) where the full written submission can be found.

By order of the Commission.

Issued: May 18, 2020.

William Bishop,

Supervisory Hearings and Information Officer.

[FR Doc. 2020–11016 Filed 5–21–20; 8:45 am]

BILLING CODE 7020–02–P

INTERNATIONAL TRADE COMMISSION

Notice of Receipt of Complaint; Solicitation of Comments Relating to the Public Interest

AGENCY: U.S. International Trade Commission.

ACTION: Notice.

SUMMARY: Notice is hereby given that the U.S. International Trade Commission has received a complaint entitled *Certain Rolled-Edge Rigid Plastic Food Trays, DN 3455;* the Commission is soliciting comments on any public interest issues raised by the complaint or complainant's filing pursuant to the Commission's Rules of Practice and Procedure.

FOR FURTHER INFORMATION CONTACT: Lisa R. Barton, Secretary to the Commission, U.S. International Trade Commission, 500 E Street SW, Washington, DC 20436, telephone (202) 205–2000. The public version of the complaint can be accessed on the Commission's Electronic Document Information System (EDIS) at *https://edis.usitc.gov.* For help accessing EDIS, please email *EDIS3Help@usitc.gov.*

General information concerning the Commission may also be obtained by accessing its internet server at United States International Trade Commission (USITC) at *https://www.usitc.gov.* The public record for this investigation may be viewed on the Commission's Electronic Document Information System (EDIS) at *https://edis.usitc.gov.* Hearing-impaired persons are advised that information on this matter can be obtained by contacting the Commission's TDD terminal on (202) 205–1810.

SUPPLEMENTARY INFORMATION: The Commission has received a complaint and a submission pursuant to § 210.8(b) of the Commission's Rules of Practice and Procedure filed on behalf of Clearly Clean Products, LLC and Converter Manufacturing, LLC on May 18, 2020. The complaint alleges violations of section 337 of the Tariff Act of 1930 (19 U.S.C. 1337) in the importation into the United States, the sale for importation, and the sale within the United States after importation of certain rolled-edge rigid plastic food trays. The complaint names as respondents: Eco Food Pak (USA), Inc. of Chino, CA; and Ningbo Linhua Plastic Co., Ltd. of China. The complainant requests that the Commission issue a limited exclusion order, a cease and desist order; and impose a bond upon respondents' alleged infringing articles during the 60-day Presidential review period pursuant to 19 U.S.C. 1337(j).

Proposed respondents, other interested parties, and members of the public are invited to file comments on any public interest issues raised by the complaint or § 210.8(b) filing. Comments should address whether issuance of the relief specifically requested by the complainant in this investigation would affect the public health and welfare in the United States, competitive conditions in the United States economy, the production of like or directly competitive articles in the United States, or United States consumers.

In particular, the Commission is interested in comments that:

(i) Explain how the articles potentially subject to the requested remedial orders are used in the United States;

(ii) identify any public health, safety, or welfare concerns in the United States relating to the requested remedial orders;

(iii) identify like or directly competitive articles that complainant, its licensees, or third parties make in the United States which could replace the subject articles if they were to be excluded;

(iv) indicate whether complainant, complainant's licensees, and/or third party suppliers have the capacity to replace the volume of articles potentially subject to the requested exclusion order and/or a cease and desist order within a commercially reasonable time; and

(v) explain how the requested remedial orders would impact United States consumers.

Written submissions on the public interest must be filed no later than by close of business, eight calendar days after the date of publication of this notice in the **Federal Register**. There will be further opportunities for comment on the public interest after the issuance of any final initial determination in this investigation. Any written submissions on other issues must also be filed by no later than the close of business, eight calendar days after publication of this notice in the

Federal Register. Complainant may file replies to any written submissions no later than three calendar days after the date on which any initial submissions were due. Any submissions and replies filed in response to this Notice are limited to five (5) pages in length, inclusive of attachments.

Persons filing written submissions must file the original document electronically on or before the deadlines stated above and submit 8 true paper copies to the Office of the Secretary by noon the next day pursuant to § 210.4(f) of the Commission's Rules of Practice and Procedure (19 CFR 210.4(f)). Submissions should refer to the docket number (''Docket No. 3455'') in a prominent place on the cover page and/or the first page. (*See* Handbook for Electronic Filing Procedures, Electronic Filing Procedures [1]). Persons with questions regarding filing should contact the Secretary (202–205–2000).

Any person desiring to submit a document to the Commission in confidence must request confidential treatment. All such requests should be directed to the Secretary to the Commission and must include a full statement of the reasons why the Commission should grant such treatment. *See* 19 CFR 201.6. Documents for which confidential treatment by the Commission is properly sought will be treated accordingly. All information, including confidential business information and documents for which confidential treatment is properly sought, submitted to the Commission for purposes of this Investigation may be disclosed to and used: (i) By the Commission, its employees and Offices, and contract personnel (a) for developing or maintaining the records of this or a related proceeding, or (b) in internal investigations, audits, reviews, and evaluations relating to the programs, personnel, and operations of the Commission including under 5 U.S.C. Appendix 3; or (ii) by U.S. government employees and contract personnel,[2] solely for cybersecurity purposes. All nonconfidential written submissions will be available for public inspection at the Office of the Secretary and on EDIS.[3]

This action is taken under the authority of section 337 of the Tariff Act of 1930, as amended (19 U.S.C. 1337), and of §§ 201.10 and 210.8(c) of the Commission's Rules of Practice and Procedure (19 CFR 201.10, 210.8(c)).

By order of the Commission.

Issued: May 18, 2020.

William Bishop,

Supervisory Hearings and Information Officer.

[FR Doc. 2020–11032 Filed 5–21–20; 8:45 am]

BILLING CODE 7020–02–P

[1] Handbook for Electronic Filing Procedures: *https://www.usitc.gov/documents/handbook_on_filing_procedures.pdf.*

[2] All contract personnel will sign appropriate nondisclosure agreements.

[3] Electronic Document Information System (EDIS): *https://edis.usitc.gov.*

INTERNATIONAL TRADE COMMISSION

[Inv. No. 337–TA–1200]

Certain Electronic Devices, Including Streaming Players, Televisions, Set Top Boxes, Remote Controllers, and Components Thereof; Institution of Investigation

AGENCY: U.S. International Trade Commission.

ACTION: Notice.

SUMMARY: Notice is hereby given that a complaint was filed with the U.S. International Trade Commission on April 16, 2020, under section 337 of the Tariff Act of 1930, as amended, on behalf of Universal Electronics Inc. of Scottsdale, Arizona. Supplements were filed on April 21, April 24, and May 1, 2020. The complaint, as supplemented, alleges violations of section 337 based upon the importation into the United States, the sale for importation, and the sale within the United States after importation of certain devices, including streaming players, televisions, set top boxes, remote controllers, and components thereof by reason of infringement of certain claims of U.S. Patent No. 9,911,325 (''the '325 Patent''); U.S. Patent No. 7,589,642 (''the '642 Patent''); U.S. Patent No. 7,969,514 (''the '514 Patent''); U.S. Patent No. 10,600,317 (''the '317 Patent''); U.S. Patent No. 10,593,196 (''the '196 Patent''), and U.S. Patent No. 9,716,853 (''the '853 Patent''). The complaint further alleges that an industry in the United States exists as required by the applicable Federal Statute. The complainant requests that the Commission institute an investigation and, after the investigation, issue a limited exclusion order and cease and desist orders.

ADDRESSES: The complaint, except for any confidential information contained therein, may be viewed on the Commission's electronic docket (EDIS) at *https://edis.usitc.gov.* For help accessing EDIS, please email *EDIS3He1p@usitc.gov.* Hearing impaired individuals are advised that information on this matter can be obtained by contacting the Commission's TDD terminal on (202) 205–1810. Persons with mobility impairments who will need special assistance in gaining access to the Commission should contact the Office of the Secretary at (202) 205–2000. General information concerning the Commission may also be obtained by accessing its internet server at *https://www.usitc.gov.*

FOR FURTHER INFORMATION CONTACT: Katherine Hiner, Office of the Secretary, Docket Services Division, U.S. International Trade Commission, telephone (202) 205–1802.

SUPPLEMENTARY INFORMATION:

Authority: The authority for institution of this investigation is contained in section 337 of the Tariff Act of 1930, as amended, 19 U.S.C. 1337, and in section 210.10 of the Commission's Rules of Practice and Procedure, 19 CFR 210.10 (2019).

Scope of Investigation: Having considered the complaint, the U.S. International Trade Commission, on May 18, 2020, *ordered that*—

(1) Pursuant to subsection (b) of section 337 of the Tariff Act of 1930, as amended, an investigation be instituted to determine whether there is a violation of subsection (a)(1)(B) of section 337 in the importation into the United States, the sale for importation, or the sale within the United States after importation of certain products identified in paragraph (2) by reason of infringement of one or more of claims 1, 2, 4, 6–9, and 11–16 of the '325 patent; claims 1, 2–7, 12, 14, 19, 20, and 22–25 of the '642 patent; claims 1–6 and 20 of the '514 patent; claims 1–11 of the '317 patent; claims 1–22 of the '196 patent; claims 1–3 and 5–8 of the '853 patent; and whether an industry in the United States exists as required by subsection (a)(2) of section 337;

(2) Pursuant to section 210.10(b)(1) of the Commission's Rules of Practice and Procedure, 19 CFR 210.10(b)(1), the plain language description of the accused products or category of accused products, which defines the scope of the investigation, is ''televisions, set-top boxes, remote control devices, streaming devices, and sound bars that incorporate the infringing technology'';

(3) For the purpose of the investigation so instituted, the following are hereby named as parties upon which this notice of investigation shall be served:

(a) The complainant is:

Universal Electronics, Inc., 15147 N Scottsdale Road, Suite H300, Scottsdale, Arizona 85254

(b) The respondents is/are the following entities alleged to be in

violation of section 337, and is/are the parties upon which the complaint is to be served:

Roku Inc., 150 Winchester Circle, Los Gatos, CA 95032

TCL Electronics Holdings Limited, f/k/a, TCL Multimedia Holdings Limited, 7th Floor, Bulding 22E, 22 Science Park East Avenue, Hong Kong Science Park, Shatin, New Territories, Hong Kong

Shenzhen TCL New Technology Company Limited, 5 Shekou Industrial Avenue Shenzhen, 518067, P.R. China

TCL King Electrical Appliances, (Huizhou) Company Limited, 78 Zhongkai Development Zone, Huizhou, 516006, P.R. China

TTE Technology Inc. d/b/a/TCL USA and TCL North America, 555 South Promenade Avenue, Suite 103, Corona, CA 92879

TCL Corp., TCL Technology Building, 17 Huifeng 3rd Road, Zhongkai Hi-Tech Development District, Huizhou City, Guangdong Province, P.R. China

TCL Moka, Int'l Ltd., 13/F, TCL Tower, 8 Tai Chung Road Tsuen Wan, New Territories, Hong Kong

TCL Overseas Marketing Ltd., 13/F, TCL Tower, 8 Tai Chung Road Tsuen Wan, New Territories, Hong Kong

TCL Industries Holdings Co., Ltd., 13/F, TCL Tower, 8 Tai Chung Road Tsuen Wan, New Territories Hong Kong

TCL Smart Device (Vietnam) Company, Ltd., No. 26 VSIP II–A, Street 32, Vietnam Singapore Industrial Park II–A, Tan Binh Commune, Bac Tan Uyen District, Binh Duong Province, Vietnam

Hisense Co. Ltd., Hisense Tower, No. 17 Donghai West Road, South District, Qingdao, Shandong Provence 266071, P.R. China

Hisense Electronics Manufacturing Company of America Corporation d/b/a Hisense USA, 7310 McGinnis Ferry Road, Suwanee, Georgia 20024

Hisense Import & Export Co. Ltd., Hisense Tower, No. 17 Donghai West Road, South District, Qingdao, Shandong Provence 266071, P.R. China

Qingdao Hisense Electric Co., Ltd., 218 Qianwangang Road, Economic Technology Development Zone, Qingdao, Shandong Province 266555, P.R. China

Hisense International (HK) Co., Ltd., Room 3101–5, Singga Coml Ctr, 148 Connaught Road West, Sheng Wan Hong Kong (SAR)

Funai Electric Co., Ltd., 7–7–1 Nakagaito, Daito city, Osaka 574–0013, Japan

Funai Corporation Inc., 201 Route 17 North, Suite 903, Rutherford, NJ 07070

Funai (Thailand) Co., Ltd., 835 Moo 18, Pakchong-Lumsompung Road, Tambon Chantuek, Amphur Pakchong, Nakhon Ratchasima, Thailand, 30130

(4) For the investigation so instituted, the Chief Administrative Law Judge, U.S. International Trade Commission, shall designate the presiding Administrative Law Judge.

The Office of Unfair Import Investigations will not participate as a party in this Investigation.

Responses to the complaint and the notice of investigation must be submitted by the named respondents in accordance with section 210.13 of the Commission's Rules of Practice and Procedure, 19 CFR 210.13. Pursuant to 19 CFR 201.16(e) and 210.13(a), as amended in 85 FR 15798 (March 19, 2020), such responses will be considered by the Commission if received not later than 20 days after the date of service by the complainant of the complaint and the notice of investigation. Extensions of time for submitting responses to the complaint and the notice of investigation will not be granted unless good cause therefor is shown.

Failure of a respondent to file a timely response to each allegation in the complaint and in this notice may be deemed to constitute a waiver of the right to appear and contest the allegations of the complaint and this notice, and to authorize the administrative law judge and the Commission, without further notice to the respondent, to find the facts to be as alleged in the complaint and this notice and to enter an initial determination and a final determination containing such findings, and may result in the issuance of an exclusion order or a cease and desist order or both directed against the respondent.

By order of the Commission.

Issued: May 18, 2020

William Bishop,

Supervisory Hearings and Information Officer.

[FR Doc. 2020–11026 Filed 5–21–20; 8:45 am]

BILLING CODE 7020–02–P

DEPARTMENT OF JUSTICE

Antitrust Division

United States v. Novelis Inc., et al., No. 1:10–cv–02033 (CAB); Proposed Final Judgment and Competitive Impact Statement

Notice is hereby given pursuant to the Antitrust Procedures and Penalties Act, 15 U.S.C. 16(b)–(h), that a proposed Final Judgment, Stipulation, and Competitive Impact Statement have been filed with the United States District Court for the Northern District of Ohio in *United States of America* v. *Novelis Inc., et al.,* Civil Action No. 1:19–cv–02033 (CAB). On September 4, 2019, the United States filed a Complaint alleging that Novelis Inc.'s proposed acquisition of Aleris Corporation's North American aluminum automotive body sheet (''ABS'') business would violate Section 7 of the Clayton Act, 15 U.S.C. 18. The proposed Final Judgment, filed on May 12, 2020, requires Novelis Inc. to divest Aleris Corporation's North American aluminum ABS operations in their entirety. The divestiture includes two facilities: One production facility in Lewisport, Kentucky, and one technical service center located in Madison Heights, Michigan; and all other tangible and intangible assets related to or used in connection with the Lewisport, Kentucky facility.

Copies of the Complaint, proposed Final Judgment, and Competitive Impact Statement are available for inspection on the Antitrust Division's website at *http://www.justice.gov/atr* and at the Office of the Clerk of the United States District Court for the Northern District of Ohio. Copies of these materials may be obtained from the Antitrust Division upon request and payment of the copying fee set by Department of Justice regulations.

Public comment is invited within 60 days of the date of this notice. Such comments, including the name of the submitter, and responses thereto, will be posted on the Antitrust Division's website, filed with the Court, and, under certain circumstances, published in the **Federal Register**. Comments should be directed to Katrina Rouse, Chief, Defense, Industrials and Aerospace Section, Antitrust Division, Department of Justice, 450 Fifth Street NW, Suite

8700, Washington, DC 20530 (telephone: 202–598–2459).

Suzanne Morris,

Chief, Premerger and Division Statistics.

United States District Court for the Northern District of Ohio

United States of America, Plaintiff, v. *Novelis Inc.* and *Aleris Corporation, Defendants.*

Case No.: 1:19–cv–02033–CAB

Complaint

The United States of America brings this civil antitrust action pursuant to Section 7 of the Clayton Act, 15 U.S.C. 18, to enjoin Novelis Inc.'s (''Novelis'') proposed acquisition of its new and disruptive rival, Aleris Corporation (''Aleris''). The United States alleges as follows:

I. Introduction

1. Automakers are turning to aluminum to make vehicles lighter, so they can satisfy consumer demand for larger vehicles while enhancing fuel efficiency, safety, and performance. As a result, demand for rolled aluminum sheet for automotive applications (commonly referred to as ''automotive body sheet'' or ''ABS'') is growing.

2. Novelis and Aleris are two of only four aluminum ABS suppliers in North America. If permitted to proceed, the transaction would concentrate approximately 60 percent of total production capacity and the majority of uncommitted (open) capacity with Novelis. Novelis has long been one of only a few aluminum ABS suppliers in North America, while Aleris is a relatively new competitor that—in Novelis's own words—is ''poised for transformational growth.'' By acquiring Aleris, Novelis would lock up a large share of available aluminum ABS capacity for the foreseeable future, which would immediately and negatively impact competition in this market. Novelis's own deal documents reveal an anticompetitive motivation behind this acquisition: Preventing rivals from acquiring a disruptive competitor, Aleris, so that Novelis can maintain its current high prices.

3. The transaction likely would lessen competition substantially in the market for aluminum ABS sold to North American customers in violation of Section 7 of the Clayton Act and, unless enjoined, automakers and American consumers will be harmed through higher prices, reduced innovation, and less favorable terms of service.

II. Industry Overview

A. Background on Aluminum ABS

4. The North American automotive industry is a vital sector of the American economy. The industry represents the single largest manufacturing sector in the United States, accounting for about three percent of gross domestic product. In 2017, over 11 million vehicles were produced in the United States. For decades, automakers used flat-rolled steel almost exclusively in the construction of automotive bodies.

5. Growing consumer demand for larger vehicles loaded with safety and performance features has led automakers to pursue light-weight designs. Automakers have turned to aluminum ABS, which is 30 to 40 percent lighter than traditional steel, as the material of choice for light-weighting the next generation of vehicles.

6. Although aluminum is substantially more expensive than steel, aluminum has distinct and superior physical properties. Vehicles made with aluminum are lighter and more fuel-efficient. Aluminum ABS is also safer and more durable, absorbing substantially more energy than traditional steel upon impact. Light-weight vehicles also have significant performance advantages including faster acceleration, better handling, shorter braking distance, and increased payload and towing capabilities. In addition to aluminum ABS's significant light-weighting advantages, aluminum ABS is also highly formable, resists breaking, and provides more styling options for automobile designers than traditional steel.

7. Automakers recognize that aluminum ABS offers light-weighting, physical, and performance benefits over traditional steel such that the two materials are not close substitutes for many important design and engineering features, even though traditional steel still comprises the majority of the material used in cars. Some automakers, such as the Ford Motor Company, have adopted an aluminum-intensive design for certain vehicle models (*e.g.,* the F–150 pickup truck), achieving significant weight-savings and performance benefits. Other automakers are pursuing light-weight designs using an incremental ''multi-material'' approach, in which automakers use the best material for each particular part or application. Under the multi-material approach, aluminum ABS is being used to replace traditional steel in large automotive panels, such as the hood, liftgates, doors and fenders (*i.e.,* the vehicle's ''skin''). By doing so, automakers can substantially reduce the weight of vehicles, meet regulatory emissions targets, and achieve safety and performance benefits that could not be done using steel.

8. Light-weighting designs are also critical for the next generation of electric vehicles. Aluminum ABS can reduce electric vehicle weight by up to 20 percent, allowing an electric vehicle to run farther on a single charge.

9. Aluminum ABS is recognized as a critical input in automakers' light-weighting strategies. As automakers continue to build the bigger-yet-more-efficient vehicles that consumers demand, more and more aluminum ABS will be incorporated into automobile models.

10. Aluminum ABS demand is increasing. An industry-wide study conducted by Ducker Worldwide predicts that the total aluminum content in vehicles will increase 37 percent from about 400 pounds per vehicle in 2015 to more than 550 pounds by 2028.

11. Supply is tight. Suppliers have limited capacity to produce aluminum ABS. In North America, much of the aluminum ABS production capacity is already committed to fulfilling automaker orders. A supplier must have sufficient uncommitted capacity to satisfy the automaker's aluminum ABS quantity requirements in order to bid or compete for new vehicle models. A supplier that cannot meet those requirements because it has little or no uncommitted capacity cannot effectively compete for the business.

12. Based on Ducker's projections and their own market intelligence, Novelis and Aleris each independently has determined that the demand for aluminum ABS in North America will soon outgrow market supply. The majority of aluminum ABS production capacity is already committed to fulfilling existing automakers' orders, leaving the bulk of uncommitted capacity with Novelis and, its target, Aleris.

13. Additional capacity cannot be readily brought online to meet growing demand. Barriers to entry are high and expansion of existing production facilities is costly and takes years to complete. Moreover, steel suppliers cannot readily shift to production of aluminum ABS because aluminum ABS is produced using a distinct process on specialized equipment.

14. Due to transportation costs and supply chain risks, importing aluminum ABS is not a primary sourcing strategy for most automakers in North America. Imports, therefore, make up only a marginal volume of supply.

B. Novelis Is Seeking To Eliminate an Emerging Competitive Threat Through This Acquisition

15. For years, North American aluminum ABS production was dominated by just two firms, Novelis and another large domestic rival. By its own account, Novelis enjoyed this ''favorable industry structure'' because it allowed Novelis to embark on a ''price leadership strategy'' and realize ''substantial market-based pricing movement.'' Novelis took advantage of this industry structure to increase prices to certain automaker customers by up to 30 percent.

16. In 2016, Aleris, an aluminum ABS producer in the European market, established facilities in the United States. Aleris's entry had an immediate impact on pricing in North America, forcing Novelis to lower its prices. For instance, internal documents confirm that ''Novelis reduced [its] base price by up to 5%'' for one automaker in order to compete with Aleris's lower prices. Fearing lower prices from Aleris for another automaker customer, Novelis dropped its bid by about five percent to ''be in the range of Aleris.'' New capacity from Aleris threatened Novelis's ''premium pricing,'' and in turn, Novelis's high profit margins.

17. Aleris's entry into North America not only undercut Novelis's prices and margins, but it also resulted in vigorous head-to-head competition with Novelis on customer service and support. Based on its experience in Europe, Aleris immediately established a technical support center in the Detroit area to work closely with automaker design engineers to expand the use of aluminum ABS solutions. Novelis's CEO, Steve Fisher, testified that Aleris ''actually was in front of [Novelis] a little bit . . . with the customer solution center.'' In response, Novelis copied Aleris's efforts, starting its own solution center less than 30 miles from Aleris's facility.

18. Even before Aleris began producing aluminum ABS coils in the United States, Novelis tried to buy Aleris as a way to preserve the ''favorable industry structure'' that enabled Novelis's ''premium pricing.'' Aleris's private equity owners had, however, already agreed to sell Aleris to a foreign buyer. When Aleris's deal with the foreign buyer unraveled in the fall of 2017, Novelis aggressively moved to acquire Aleris.

19. Novelis was particularly concerned that in the hands of another buyer, Aleris would further erode Novelis's prices and margins. In documents setting forth Novelis's strategic analysis of the transaction, the Novelis due diligence team expressed concern that if Novelis were not the acquirer, Aleris could be sold to a ''[n]ew market entrant in the US with lower pricing discipline'' than Novelis, and that an ''[a]lternative buyer [was] likely to bid aggressively and negatively impact pricing'' in the market. A ''key takeaway'' of this analysis was that, by acquiring Aleris itself, Novelis ''[p]revents competitors from acquiring assets and driving less disciplined pricing.''

20. This same anticompetitive rationale was repeated in numerous internal analyses of the deal that were generated by, or presented to, top Novelis executives and/or the Novelis Board of Directors. These analyses of the deal state:

- ''[A]n acquisition by us as the market leader will help preserve the industry structure versus a new player . . . coming into our growth markets and disturbing the industry structure to create space for himself, while hurting us the most.''
- Novelis should buy Aleris because an ''alternative buyer [is] likely to bid aggressively and negatively impact pricing.''
- Another buyer of Aleris likely would be a ''[n]ew market entrant in the US with lower pricing discipline'' that would create the ''potential for accelerated price declines as they seek to fill capacity.'' If not Novelis, an alternative buyer might have ''lower pricing discipline.''

Novelis conducted a ''build or buy'' analysis of Aleris that concluded as ''key takeaways'' that Novelis should acquire Aleris because there is a ''disincentive for market leader [*i.e.,* Novelis] to add capacity and contribute to a price drop'' and an acquisition of Aleris ''prevents competitors from acquiring assets and driving less disciplined pricing.''

III. Defendants and the Proposed Transaction

21. Novelis is a global manufacturer of semi-finished aluminum products with global revenues of approximately $12.3 billion for the fiscal year ending March 31, 2019. The company is incorporated in Canada and headquartered in Atlanta, Georgia. It operates 23 production facilities in North America, South America, Europe and Asia. Eight facilities are located in North America, including two (Oswego, New York, and Kingston, Ontario) that currently produce aluminum ABS. Another aluminum ABS finishing line is under construction in Guthrie, Kentucky. Novelis supplies flat-rolled aluminum products in three segments: beverage can, specialty and automotive.

22. Novelis is a wholly-owned subsidiary of Hindalco Industries, Ltd., an Indian company headquartered in Mumbai, India.

23. Aleris also is a global manufacturer of semi-finished aluminum products, generating global revenues of approximately $3.4 billion in 2018. Aleris is a Delaware corporation, headquartered in Cleveland, Ohio and operates 13 production facilities in North America, South America, Europe, and Asia. Aleris supplies flat-rolled aluminum products to the automotive, aerospace and building and construction industries, among others. Aleris has been a producer of aluminum ABS in Europe since 2002, and recently expanded ABS production into the North America market with new ABS production lines in Lewisport, Kentucky.

24. Novelis and Aleris entered into a definitive Agreement and Plan of Merger, dated July 26, 2018. Under this agreement, Novelis will acquire 100 percent of the voting securities of Aleris for an estimated enterprise value of $2.6 billion.

IV. The Relevant Market Threatened by the Acquisition

25. Aluminum ABS sold to automakers in North America constitutes a relevant antitrust market and line of commerce under Section 7 of the Clayton Act. A well-accepted methodology for determining a relevant market for antitrust analysis is to ask whether a hypothetical monopolist over all products in the proposed market could profitably impose at least a small but significant and non-transitory increase in price, or SSNIP. *See* Fed. Trade Comm'n & U.S. Dep't of Justice Horizontal Merger Guidelines (2010) (''Horizontal Merger Guidelines''); *accord Fed. Trade Comm'n* v. *Whole Foods Market,* 548 F.3d 1028, 1038 (DC Cir. 2008). A hypothetical monopolist of aluminum ABS sold to automakers in North America could profitably increase prices by at least a SSNIP because North American automakers are unlikely to substitute away from aluminum ABS in sufficient quantities to make that price increase unprofitable. Therefore, the sale of aluminum ABS to North American automakers is a relevant antitrust market.

A. Relevant Product Market

26. An automaker can make a car part out of aluminum, steel, or other material, but there are substantial differences in the physical properties of aluminum (as compared to steel), such

that an automotive engineer designing a car with particular weight, performance, safety specifications, and target retail price is unlikely to view steel and other materials as full functional substitutes for aluminum for the various car parts being designed. Nor is any other material likely to significantly impact the pricing of aluminum ABS for most car parts, or vice-versa. Aluminum ABS is a distinct line of commerce and constitutes a relevant product market even if a broader market for automotive materials may also exist.

27. Aluminum ABS is different from other materials used in automotive applications and meets many of the practical indicia that courts rely on to define a relevant product market. As an initial matter, Novelis and Aleris and other industry participants recognize aluminum ABS as a distinct product with its own market dynamics. Novelis and Aleris describe themselves as ''leaders'' in the aluminum ABS market, and they calculate market share for the automotive business by looking to sales of aluminum ABS alone. In strategic planning documents commenting on the competitive landscape in aluminum ABS, Novelis boasted that it is the ''[m]arket leader with ~60% share'' of the ''[a]utomotive business in North America.'' Similarly, in the defendants' ordinary course of business documents, the defendants refer predominantly to the supply, demand, and competitiveness of other aluminum ABS suppliers when discussing competitive dynamics in the automotive industry.

28. Aluminum ABS also has physical properties that are distinctive from other automotive materials. Compared to steel, for instance, aluminum has a higher strength-to-weight ratio, higher strength in large panels, and superior corrosion resistance. These qualities are highly sought after by auto designers and engineers. Alternative materials, such as steel, generally do not share these attributes and therefore, these materials are not reasonable substitutes for aluminum ABS for automakers when designing and engineering the technical and performance specifications of vehicles.

29. Steel companies are developing lighter, high strength steel varieties for the auto industry. But as Novelis has observed, high strength steel ''is largely replacing existing mild steel'' and ''cannibalizing the existing material'' (*i.e.,* traditional steel). The threat of substitution from aluminum to high strength steel is, as Aleris confirms, ''limited.''

30. The price of aluminum ABS is also distinct from other ABS materials, including steel. Aluminum ABS is about three to four times more expensive than traditional steel per pound, but North American automakers continue to adopt aluminum ABS in place of steel because of its superior light-weighting qualities and performance and safety benefits. As a result of those qualities, even as aluminum commodity pricing rose in 2018, Novelis prepared to tell its investors that ''[w]e are not seeing demand destruction in our markets.'' Moreover, while aluminum ABS prices are sensitive to price changes of aluminum ABS from other aluminum ABS suppliers, they are not sensitive to price changes in other materials, such as steel.

31. Further, from the automaker's perspective, the use of aluminum ABS requires a different tooling and joining process than the default production process of steel automotive parts. Automakers continue to invest millions of dollars to upgrade their production plants as they move towards greater adoption of aluminum.

B. Relevant Geographic Market

32. The relevant geographic market in which to assess the competitive harm from the proposed transaction is North America. When a supplier can price differently based on customer location, the Horizonal Merger Guidelines provide that the relevant geographic market may be defined based on the locations of targeted customers. Such pricing is possible in aluminum ABS as evidenced by the different prices charged by suppliers across geographic regions. For example, Novelis has observed that ''North America enjoys the highest regional pricing'' with Novelis's pricing several hundred dollars per ton higher in North America than in Europe. Because of transportation costs, import tariffs and duties, the limited shelf life of most types of aluminum ABS, and supply chain risks, customers of aluminum ABS in North America are unlikely to be able to defeat a price increase through arbitrage from outside North America.

33. This price gap between North America and other geographic regions has persisted over many years, supporting the conclusion that North America is a relevant geographic market.

V. Anticompetitive Effects of the Acquisition

34. The proposed acquisition is likely to lead to anticompetitive effects. As an initial matter, this transaction is presumptively anticompetitive. The Supreme Court has held that mergers that significantly increase concentration in concentrated markets are presumptively anticompetitive and, therefore, unlawful. *See United States* v. *Phila. Nat'l Bank,* 374 U.S. 321, 363–65 (1963). To measure market concentration, courts often use the Herfindahl-Hirschman Index (''HHI'') as described in the Horizontal Merger Guidelines. Mergers that increase the HHI by more than 200 and result in an HHI above 2,500 in any market are presumed to be anticompetitive.

35. The North American aluminum ABS market is already highly concentrated. By Novelis's own assessment, post-merger, Novelis could control more than 60 percent of the North American aluminum ABS market. Based on current sales estimates—which includes a marginal volume of imports—if Novelis were allowed to acquire Aleris, the HHI would increase by almost 500 points to a post-transaction HHI reaching almost 4,000. Thus, this merger is presumed to be anticompetitive under Supreme Court precedent.

36. Beyond the presumption provided under Supreme Court precedent, the facts establish the probable anticompetitive effect of the merger. First, Aleris's expansion into the North American market had an immediate positive impact on competition and pricing. Novelis reduced its pricing to some of the industry's largest and most significant automakers in order to meet customer ''targets (as set by Aleris),'' or to ''be in the range of Aleris.'' With uncommitted production capacity and its recent $425 million aluminum ABS expansion at its facility in Lewisport, Kentucky, Aleris is poised to continue to compete vigorously with Novelis by offering lower prices in an effort to steal share.

37. Through this acquisition, however, Novelis would seize control of Aleris's uncommitted capacity, eliminating a rival it described as ''poised for transformational growth.'' Aleris and Novelis are the only two firms expected to have sizable uncommitted North American capacity over the next few years. If the merger is enjoined, head-to-head competition between Aleris and Novelis would likely intensify as they fight to fill their production lines. As Novelis's own documents reveal, this competition would have disrupted Novelis's ''premium pricing'' strategy, resulting in lower prices to automakers.

38. In addition, the proposed acquisition likely would reduce quality and innovation in aluminum ABS. For example, Novelis copied Aleris's establishment of a technical support center in the Detroit area, which was developed to work directly with

automakers. The merger would eliminate this type of competition between the two firms.

39. If allowed to proceed, the proposed acquisition would reduce the number of North American aluminum ABS suppliers from 4 to 3. This consolidation would concentrate more than half of the domestic aluminum ABS sales, 60 percent of projected total domestic capacity, and the majority of uncommitted domestic capacity under the control of one firm.

40. Post-transaction, no other firms would have the incentive and ability to constrain Novelis. The transaction would result in higher prices, as well as reduced innovation and technical support for automakers that rely on this critical input.

VI. Absence of Countervailing Factors

41. New entry or expansion by existing competitors is unlikely to prevent or remedy the transaction's likely anticompetitive effects in the market for aluminum ABS.

42. The aluminum ABS market has significant barriers to entry. Barriers include the high cost and long-time frame needed to build production facilities. For example, to compete in the automotive market, aluminum companies generally must build a specialized ''heat-treat'' finishing line to make aluminum sheet for automotive applications. These heat-treat finishing lines take years to build and cost hundreds of millions of dollars to construct, and require sophisticated technological know-how to operate.

43. In addition to heat-treat finishing lines, aluminum ABS suppliers need aluminum coils that are wide enough for automotive applications. These aluminum coils are produced at hot mills, and there are only a few hot mills in North America. Building a new hot mill takes several years and requires a significant capital investment of well over a billion dollars. Meanwhile, expanding or re-outfitting an existing facility to have auto-capable hot mill capacity could also require several hundred million dollars.

44. As a result of these barriers, entry into the market for aluminum ABS would not be timely, likely, or sufficient to defeat the substantial lessening of competition that is likely to result from Novelis's acquisition of Aleris.

45. Moreover, because of supply chain risks and other factors, customers of the merged firm (*i.e.,* North American automakers) are unlikely to turn to foreign suppliers of aluminum ABS in sufficient volume to mitigate the anticompetitive effects of the merger.

VII. Jurisdiction and Venue

46. The United States brings this civil antitrust action against defendants Novelis and Aleris under Section 15 of the Clayton Act, 15 U.S.C. 25, as amended, to prevent and restrain defendants from violating Section 7 of the Clayton Act, 15 U.S.C. 18.

47. This Court has subject matter jurisdiction over this action pursuant to Section 15 of the Clayton Act, 15 U.S.C. 25, and 28 U.S.C. 1331, 1337(a) and 1345. Novelis and Aleris develop, manufacture, and sell aluminum ABS in the flow of interstate commerce. The activities of Novelis and Aleris in developing, manufacturing, and selling these products substantially affect interstate commerce.

48. This Court has personal jurisdiction over Novelis and Aleris. Both parties have significant contacts with this judicial district: Novelis is registered to do business in the State of Ohio and transacts business in this District; Aleris is headquartered in Cleveland, Ohio and also transacts business in this District. Moreover, Novelis's proposed acquisition of Aleris will have effects throughout the United States, including in this District.

49. Venue is proper in this District pursuant to Section 12 of the Clayton Act, 15 U.S.C. 22, and under 28 U.S.C. 1391(b) and (c).

VIII. Violation Alleged

50. Novelis's acquisition of Aleris is likely to lessen substantially competition in the relevant market in violation of Section 7 of the Clayton Act, 15 U.S.C. 18.

51. The transaction will have the following effects, among others:

a. Eliminate head-to-head competition between Novelis and Aleris in the development, manufacture and sale of aluminum ABS;

b. Likely reduce competition between and among Novelis and the remaining suppliers of aluminum ABS; and

c. Likely cause prices of the relevant product to increase, delivery times to lengthen, terms of service to become less favorable, and innovation to be reduced.

IX. Request for Relief

52. The United States requests that this Court:

a. adjudge and decree the acquisition of Aleris by defendant Novelis to violate Section 7 of the Clayton Act, 15 U.S.C. 18;

b. preliminarily and permanently enjoin and restrain the defendants from carrying out the proposed acquisition of Aleris by Novelis or any other transaction that would combine the two companies and further enjoin the defendants from taking any steps towards completing the acquisition of Aleris by Novelis;

c. award such temporary and preliminary injunctive and ancillary relief as may be necessary to avert the dissipation of Aleris's tangible and intangible assets during the pendency of this action and to preserve the possibility of effective permanent relief;

d. award the United States the cost of this action; and

e. grant the United States such other and further relief as the Court deems just and proper.

Respectfully submitted,

September 4, 2019

FOR PLAINTIFF UNITED STATES OF AMERICA,

Makan Delrahim
Assistant Attorney General

Kathleen O'neill
Senior Director of Investigations and Litigation

Craig W. Conrath
Director of Litigation

Patricia A. Brink
Director of Civil Enforcement

Julia A. Schiller
Counsel to the Assistant Attorney General

John Read
Acting Chief, Defense, Industrials, and Aerospace Section

Stephanie A. Fleming
Assistant Chief, Defense, Industrials, and Aerospace Section

Samer M. Musallam (OH #0078472)
Lowell R. Stern
Blake W. Rushforth
Bashiri Wilson
Angela Ting
James Foster
Siddarth Dadhich
Thomas Dematteo
Ethan Stevenson
Trial Attorneys,
Antitrust Division, United States Department of Justice,
450 Fifth Street NW, Washington, DC 20530,
Telephone: (202) 598–2990, Facsimile: (202) 514–9033, samer.musallam@usdoj.gov.

United States District Court for the Northern District of Ohio

United States of America, Plaintiff, v. *Novelis Inc. and Aleris Corporation,* Defendants.

Case.: 1:19–cv–02033–CAB

[Proposed] Final Judgment

Whereas, Plaintiff, United States of America, filed its complaint on September 4, 2019, and the United States and Defendants, Novelis Inc. and Aleris Corporation, by their respective attorneys, have consented to entry of this Final Judgment, without this Final Judgment constituting any evidence against or admission by a party regarding any issue of fact or law;

And whereas, Defendants agree to be bound by the provisions of this Final Judgment pending its approval by the Court;

And whereas, the essence of this Final Judgment is the prompt and certain divestiture of certain rights or assets by Defendants to assure that competition is not substantially lessened;

And whereas, Defendants agree to make a divestiture for the purpose of remedying the loss of competition alleged in the Complaint;

And whereas, Defendants represent that the divestiture and other relief required by this Final Judgment can and will be made and that Defendants will not later raise a claim of hardship or difficulty as grounds for asking the Court to modify any provision of this Final Judgment;

Now therefore, upon consent of the parties, it is *ordered, adjudged, and decreed*:

I. Jurisdiction

The Court has jurisdiction over the subject matter of and each of the parties to this action. The Complaint states a claim upon which relief may be granted against Defendants under Section 7 of the Clayton Act, as amended (15 U.S.C. 18).

II. Definitions

As used in this Final Judgment:

A. ''Acquirer'' means the entity to whom Defendants divest the Divestiture Assets.

B. ''Aluminum ABS'' means aluminum automotive body sheet, a rolled aluminum sheet product used for automotive applications.

C. ''Novelis'' means Defendant Novelis Inc., a Canadian corporation with its headquarters in Atlanta, Georgia, its successors and assigns, and its subsidiaries, divisions, groups, affiliates, partnerships, and joint ventures, and their directors, officers, managers, agents, and employees.

D. ''Aleris'' means Defendant Aleris Corporation, a Delaware corporation with its headquarters in Cleveland, Ohio, its successors and assigns, and its subsidiaries, divisions, groups, affiliates, partnerships, and joint ventures, and their directors, officers, managers, agents, and employees.

E. ''Divestiture Assets'' means:

1. All of Defendants' rights, title, and interests, wherever located, in and relating to the manufacturing and support facilities located at:

a. 1372 State Route 1957, Lewisport, Kentucky 42351 (the ''Lewisport Rolling Mill''); and

b. 1450 East Avis Drive, Madison Heights, Michigan 48071 (the ''Innovation Center'');

2. All tangible assets, wherever located, related to or used in connection with the operation of the Lewisport Rolling Mill, including, but not limited to: Research and development activities; all manufacturing equipment, tooling and fixed assets, personal property, inventory, office furniture, materials, supplies, and all other tangible property and assets; all licenses, permits, and authorizations issued by any governmental organization; all contracts, teaming arrangements, agreements, leases, commitments, certifications, and understandings, including supply agreements; all customer lists, contracts, accounts, and credit records; all repair and performance records and all other records; and

3. All intangible assets related to or used in connection with the operation of the Lewisport Rolling Mill, including, but not limited to: All patents; licenses and sublicenses; intellectual property; copyrights; trademarks; trade names; service marks; service names; technical information; computer software (including software developed by third parties) and related documentation; know-how; trade secrets; drawings; blueprints; designs; design protocols; specifications for materials; specifications for parts and devices; safety procedures for the handling of materials and substances; quality assurance and control procedures; design tools and simulation capability; all manuals and technical information Aleris provides to its own employees, customers, suppliers, agents, or licensees; and all research data concerning historic and current research and development efforts, including, but not limited to, designs of experiments, and the results of successful and unsuccessful designs and experiments.

F. ''Operational'' means capable of operating at full capacity, and in a state of (i) current operation or (ii) readiness to operate.

G. ''Regulatory Approvals'' means (i) any approvals or clearances pursuant to filings with the Committee on Foreign Investment in the United States (''CFIUS''), or under antitrust or competition laws required for the Transaction to proceed; and (ii) any approvals or clearances pursuant to filings with CFIUS, or under antitrust, competition, or other U.S. or international laws, or any local regulatory approvals by the City of Lewisport, Kentucky or the City of Madison Heights, Michigan, required for Acquirer's acquisition of the Divestiture Assets to proceed.

H. ''Relevant Employees'' means all full-time, part-time, or contract employees who supported or whose job responsibilities related to the Divestiture Assets at any time between July 26, 2018 and the date on which the Divestiture Assets are divested to an Acquirer, including but not limited to all employees located at the Lewisport Rolling Mill, the Innovation Center, and all other personnel involved in the design, manufacture, or sale of any products produced at the Lewisport Rolling Mill, including engineering and support employees, wherever such employees are located.

I. ''Transaction'' means the proposed acquisition of Aleris by Novelis.

III. Applicability

A. This Final Judgment applies to Novelis and Aleris, as defined above, and all other persons, in active concert or participation with any Defendant, who receive actual notice of this Final Judgment.

B. If, prior to complying with Section IV and Section V of this Final Judgment, Defendants sell or otherwise dispose of all or substantially all of their assets or of lesser business units that include the Divestiture Assets, Defendants must require the purchaser to be bound by the provisions of this Final Judgment. Defendants need not obtain such an agreement from Acquirer.

IV. Divestiture

A. Defendants are ordered and directed, within the later of ninety (90) calendar days after the Court's entry of the Order Stipulating to Modification of the Order to Hold Separate Assets in this matter, or thirty (30) calendar days after all Regulatory Approvals have been received, to divest the Divestiture Assets in a manner consistent with this Final Judgment to an Acquirer acceptable to the United States, in its sole discretion. The United States, in its sole discretion, may agree to one or more extensions of this time period not to exceed one hundred eighty (180) calendar days in total, and will notify the Court of any extensions. Defendants agree to use their best efforts to divest the Divestiture Assets as expeditiously as possible.

B. In accomplishing the divestiture ordered by this Final Judgment, Defendants promptly must make known, by usual and customary means, the availability of the Divestiture Assets. Defendants must inform any person making an inquiry regarding a possible purchase of the Divestiture Assets that the Divestiture Assets are being divested in accordance with this Final Judgment and must provide that person with a copy of this Final Judgment. Defendants must offer to furnish to all prospective Acquirers, subject to customary confidentiality assurances, all information and documents relating to the Divestiture Assets customarily provided in a due-diligence process; provided, however, that Defendants need not provide information or documents subject to the attorney-client privilege or work-product doctrine. Defendants must make this information available to the United States at the same time that the information is made available to any other person.

C. Defendants must cooperate with and assist Acquirer in identifying and hiring all Relevant Employees, including:

1. Within ten (10) business days following receipt of a request by the Acquirer of the Divestiture Assets or the United States, Defendants must identify all Relevant Employees to Acquirer and the United States, including by providing organization charts covering all Relevant Employees.

2. Within ten (10) business days following receipt of a request by Acquirer or the United States, Defendants must provide to Acquirer and the United States the following additional information related to Relevant Employees: Name; job title; current salary and benefits including most recent bonus paid, aggregate annual compensation, current target or guaranteed bonus, if any, and any other payments due to or promises made to the employee; descriptions of reporting relationships, past experience, responsibilities, and training and educational histories; lists of all certifications; and all job performance evaluations. If Defendants are barred by any applicable laws from providing any of this information, within ten (10) business days following receipt of the request, Defendants must provide the requested information to the full extent permitted by law and also must provide a written explanation of Defendants' inability to provide the remaining information.

3. At the request of Acquirer, Defendants must promptly make Relevant Employees available for private interviews with Acquirer during normal business hours at a mutually agreeable location.

4. Defendants must not interfere with any efforts by Acquirer to employ any Relevant Employees. Interference includes but is not limited to offering to increase the salary or improve the benefits of Relevant Employees unless the offer is part of a company-wide increase in salary or benefits that was announced prior to July 26, 2018, or has been approved by the United States, in its sole discretion. Defendants' obligations under this paragraph will expire six (6) months after the divestiture of the Divestiture Assets pursuant to this Final Judgment.

5. For Relevant Employees who elect employment with Acquirer within six (6) months of the date on which the Divestiture Assets are divested to Acquirer, Defendants must waive all non-compete and non-disclosure agreements, vest all unvested pension and other equity rights, and provide all benefits that those Relevant Employees otherwise would have been provided had the Relevant Employees continued employment with Defendants, including but not limited to any retention bonuses or payments. Defendants may maintain reasonable restrictions on disclosure by Relevant Employees of Defendants' proprietary non-public information that is unrelated to the Divestiture Assets and not otherwise required to be disclosed by this Final Judgment.

6. For a period of twelve (12) months from the date on which the Divestiture Assets are divested to Acquirer, Defendants may not solicit to rehire Relevant Employees who were hired by Acquirer within six (6) months of the date on which the Divestiture Assets are divested to Acquirer unless (a) an individual is terminated or laid off by Acquirer or (b) Acquirer agrees in writing that Defendants may solicit to rehire that individual. Nothing in this paragraph prohibits Defendants from advertising employment openings using general solicitations or advertisements and hiring individuals who respond to such solicitations or advertisements.

D. Defendants must permit prospective Acquirers of the Divestiture Assets to have reasonable access to make inspections of the physical facilities and access to all environmental, zoning, and other permit documents and information, and all financial, operational, or other documents and information customarily provided as part of a due diligence process.

E. Defendants must warrant to Acquirer that each asset to be divested will be Operational and without material defect on the date of sale.

F. Defendants must not take any action that will impede in any way the permitting, operation, or divestiture of the Divestiture Assets.

G. Defendants must make best efforts to assign, subcontract, or otherwise transfer all contracts related to the Divestiture Assets, including all supply and sales contracts, to Acquirer. Defendants must not interfere with any negotiations between Acquirer and a contracting party.

H. At the option of Acquirer, and subject to approval by the United States in its sole discretion, on or before the date on which the Divestiture Assets are divested to Acquirer, Defendants must enter into a contract to provide transition services for back office, human resource, and information technology services and support for the Divestiture Assets for a period of up to twelve (12) months on terms and conditions reasonably related to market conditions for the provision of the transition services. The United States, in its sole discretion, may approve one or more extensions of this contract for transition services, for a total of up to an additional six (6) months. If Acquirer seeks an extension of the term of this contract for transition services, Defendants must notify the United States in writing at least three (3) months prior to the date the contract expires. Acquirer may terminate a contract for transition services without cost or penalty at any time upon commercially reasonable notice. The employee(s) of Defendants tasked with providing these transition services must not share any competitively sensitive information of Acquirer with any other employee of Defendants.

I. Defendants must warrant to Acquirer that there are no material defects in the environmental, zoning, or other permits pertaining to the operation of the Divestiture Assets. Following the sale of the Divestiture Assets, Defendants must not undertake, directly or indirectly, any challenges to the environmental, zoning, or other permits relating to the operation of the Divestiture Assets.

J. Unless the United States otherwise consents in writing, the divestiture pursuant to Section IV or by a Divestiture Trustee appointed pursuant to Section V of this Final Judgment must include the entire Divestiture Assets, and must be accomplished in such a way as to satisfy the United States, in its sole discretion, that the Divestiture Assets can and will be used by Acquirer as part of a viable, ongoing business of the development, manufacture, and sale of Aluminum ABS, and will remedy the competitive harm alleged in the

Complaint. The divestiture, whether pursuant to Section IV or Section V of this Final Judgment,

(1) must be made to an Acquirer that, in the United States' sole judgment, has the intent and capability (including the necessary managerial, operational, technical, and financial capability) of competing effectively in the business of the design, manufacture, and sale of Aluminum ABS; and

(2) must be accomplished so as to satisfy the United States, in its sole discretion, that none of the terms of any agreement between an Acquirer and Defendants give Defendants the ability unreasonably to raise Acquirer's costs, to lower Acquirer's efficiency, or otherwise to interfere in the ability of Acquirer to compete effectively.

K. If any term of an agreement between Defendants and Acquirer to effectuate the divestiture required by this Final Judgment varies from a term of this Final Judgment then, to the extent that Defendants cannot fully comply with both, this Final Judgment determines Defendants' obligations.

V. Appointment of Divestiture Trustee

A. If Defendants have not divested the Divestiture Assets within the period specified in Paragraph IV(A), Defendants must immediately notify the United States of that fact in writing. Upon application of the United States, the Court will appoint a Divestiture Trustee selected by the United States and approved by the Court to effect the divestiture of the Divestiture Assets.

B. After the appointment of a Divestiture Trustee by the Court, only the Divestiture Trustee will have the right to sell the Divestiture Assets. The Divestiture Trustee will have the power and authority to accomplish the divestiture to an Acquirer acceptable to the United States, in its sole discretion, at a price and on terms as are then obtainable upon reasonable effort by the Divestiture Trustee, subject to the provisions of Sections IV, V, and VI of this Final Judgment, and will have other powers as the Court deems appropriate. Subject to Paragraph V(D) of this Final Judgment, the Divestiture Trustee may hire at the cost and expense of Defendants any agents or consultants, including, but not limited to, investment bankers, attorneys, and accountants, who will be solely accountable to the Divestiture Trustee, reasonably necessary in the Divestiture Trustee's judgment to assist in the divestiture. Any such agents or consultants will serve on such terms and conditions as the United States approves, including confidentiality requirements and conflict of interest certifications.

C. Defendants may not object to a sale by the Divestiture Trustee on any ground other than malfeasance by the Divestiture Trustee. Objections by Defendants must be conveyed in writing to the United States and the Divestiture Trustee within ten (10) calendar days after the Divestiture Trustee has provided the notice required under Section VI.

D. The Divestiture Trustee will serve at the cost and expense of Defendants pursuant to a written agreement, on such terms and conditions as the United States approves, including confidentiality requirements and conflict of interest certifications. The Divestiture Trustee will account for all monies derived from the sale of the assets sold by the Divestiture Trustee and all costs and expenses so incurred. After approval by the Court of the Divestiture Trustee's accounting, including fees for any of its services yet unpaid and those of any agents and consultants retained by the Divestiture Trustee, all remaining money will be paid to Defendants and the trust will then be terminated. The compensation of the Divestiture Trustee and any agents or consultants retained by the Divestiture Trustee must be reasonable in light of the value of the Divestiture Assets and based on a fee arrangement that provides the Divestiture Trustee with incentives based on the price and terms of the divestiture and the speed with which it is accomplished, but the timeliness of the divestiture is paramount. If the Divestiture Trustee and Defendants are unable to reach agreement on the Divestiture Trustee's or any agents' or consultants' compensation or other terms and conditions of engagement within fourteen (14) calendar days of the appointment of the Divestiture Trustee, the United States may, in its sole discretion, take appropriate action, including making a recommendation to the Court. Within three (3) business days of hiring any agent or consultant, the Divestiture Trustee must provide written notice of the hiring and rate of compensation to Defendants and the United States.

E. Defendants must use their best efforts to assist the Divestiture Trustee in accomplishing the required divestiture. The Divestiture Trustee and any agents or consultants retained by the Divestiture Trustee must have full and complete access to the personnel, books, records, and facilities of the business to be divested, and Defendants must provide or develop financial and other information relevant to such business as the Divestiture Trustee may reasonably request, subject to reasonable protection for trade secrets; other confidential research, development, or commercial information; or any applicable privileges. Defendants may not take any action to interfere with or impede the Divestiture Trustee's accomplishment of the divestiture.

F. After appointment, the Divestiture Trustee will file monthly reports with the United States setting forth the Divestiture Trustee's efforts to accomplish the divestiture ordered by this Final Judgment. Reports must include the name, address, and telephone number of each person who, during the preceding month, made an offer to acquire, expressed an interest in acquiring, entered into negotiations to acquire, or was contacted or made an inquiry about acquiring, any interest in the Divestiture Assets and will describe in detail each contact with any such person. The Divestiture Trustee will maintain full records of all efforts made to divest the Divestiture Assets.

G. If the Divestiture Trustee has not accomplished the divestiture ordered by this Final Judgment within six (6) months of appointment, the Divestiture Trustee must promptly file with the Court a report setting forth: (1) The Divestiture Trustee's efforts to accomplish the required divestiture; (2) the reasons, in the Divestiture Trustee's judgment, why the required divestiture has not been accomplished; and (3) the Divestiture Trustee's recommendations. To the extent such report contains information that the Divestiture Trustee deems confidential, such report will not be filed in the public docket of the Court. The Divestiture Trustee will at the same time furnish such report to the United States, which will have the right to make additional recommendations to the Court consistent with the purpose of the trust. The Court thereafter may enter such orders as it deems appropriate to carry out the purpose of this Final Judgment, which, if necessary, may include extending the trust and the term of the Divestiture Trustee's appointment by a period requested by the United States.

H. If the United States determines that the Divestiture Trustee is not acting diligently or in a reasonably cost-effective manner, the United States may recommend that the Court appoint a substitute Divestiture Trustee.

VI. Notice of Proposed Divestiture

A. Within two (2) business days following execution of a definitive divestiture agreement, Defendants or the Divestiture Trustee, whichever is then responsible for effecting the divestiture

required herein, must notify the United States of a proposed divestiture required by this Final Judgment. If the Divestiture Trustee is responsible for effecting the divestiture, the Divestiture Trustee also must notify Defendants. The notice must set forth the details of the proposed divestiture and list the name, address, and telephone number of each person not previously identified who offered or expressed an interest in or desire to acquire any ownership interest in the Divestiture Assets, together with full details of the same.

B. Within fifteen (15) calendar days of receipt by the United States of this notice, the United States may request from Defendants, the proposed Acquirer, other third parties, or the Divestiture Trustee, if applicable, additional information concerning the proposed divestiture, the proposed Acquirer and other prospective Acquirer. Defendants and the Divestiture Trustee must furnish the additional information requested within fifteen (15) calendar days of the receipt of the request, unless the United States provides written agreement to a different period.

C. Within forty-five (45) calendar days after receipt of the notice or within twenty (20) calendar days after the United States has been provided the additional information requested from Defendants, the proposed Acquirer, other third parties, and the Divestiture Trustee, whichever is later, the United States must provide written notice to Defendants and the Divestiture Trustee, if there is one, stating whether or not the United States, in its sole discretion, objects to the proposed Acquirer or any other aspect of the proposed divestiture. If the United States provides written notice that it does not object, the divestiture may be consummated, subject only to Defendants' limited right to object to the sale under Paragraph V(C) of this Final Judgment. Absent written notice that the United States does not object or upon objection by the United States, a divestiture may not be consummated. Upon objection by Defendants pursuant to Paragraph V(C), a divestiture by the Divestiture Trustee may not be consummated unless approved by the Court.

D. No information or documents obtained pursuant to Section VI may be divulged by the United States to any person other than an authorized representative of the executive branch of the United States, except in the course of legal proceedings to which the United States is a party (including grand-jury proceedings), for the purpose of evaluating a proposed Acquirer or securing compliance with this Final Judgment, or as otherwise required by law.

E. In the event of a request by a third party for disclosure of information under the Freedom of Information Act, 5 U.S.C. 552, the Antitrust Division will act in accordance with that statute, and the Department of Justice regulations at 28 CFR part 16, including the provision on confidential commercial information, at 28 CFR 16.7. Persons submitting information to the Antitrust Division should designate the confidential commercial information portions of all applicable documents and information under 28 CFR 16.7. Designations of confidentiality expire ten years after submission, ''unless the submitter requests and provides justification for a longer designation period.'' See 28 CFR 16.7(b).

F. If at the time a person furnishes information or documents to the United States pursuant to Section VI, that person represents and identifies in writing information or documents for which a claim of protection may be asserted under Rule 26(c)(1)(G) of the Federal Rules of Civil Procedure, and marks each pertinent page of such material, ''Subject to claim of protection under Rule 26(c)(1)(G) of the Federal Rules of Civil Procedure,'' the United States must give that person ten calendar days' notice before divulging the material in any legal proceeding (other than a grand-jury proceeding).

VII. Financing

Defendants may not finance all or any part of Acquirer's purchase of all or part of the Divestiture Assets made pursuant to this Final Judgment.

VIII. Hold Separate

Until the divestiture required by this Final Judgment has been accomplished, Defendants must take all steps necessary to comply with the Hold Separate Stipulation and Order entered by the Court on January 9, 2020, or any superseding Order. Defendants will take no action that would jeopardize the divestiture ordered by the Court.

IX. Affidavits

A. Within twenty (20) calendar days of the filing of the Order Stipulating to Modification of the Order to Hold Separate Assets and proposed Final Judgment in this matter, and every thirty (30) calendar days thereafter until the divestiture required by this Final Judgment has been completed, Defendants must deliver to the United States an affidavit, signed by Defendants' Vice President, Strategy and Sustainability and General Counsel, describing the fact and manner of Defendants' compliance with this Final Judgment. Each affidavit must include the name, address, and telephone number of each person who, during the preceding thirty (30) calendar days, made an offer to acquire, expressed an interest in acquiring, entered into negotiations to acquire, or was contacted or made an inquiry about acquiring, an interest in the Divestiture Assets, and must describe in detail each contact with such persons during that period. Each affidavit also must include a description of the efforts Defendants have taken to solicit buyers for and complete the sale of the Divestiture Assets, and to provide required information to prospective Acquirers. Each affidavit also must include a description of any limitations placed by Defendants on information provided to prospective Acquirers. If the information set forth in the affidavit is true and complete, objection by the United States to information provided by Defendants to prospective Acquirers must be made within fourteen (14) calendar days of receipt of the affidavit.

B. Within twenty (20) calendar days of the filing of the Order Stipulating to Modification of the Order to Hold Separate Assets and proposed Final Judgment in this matter, Defendants must deliver to the United States an affidavit that describes in reasonable detail all actions Defendants have taken and all steps Defendants have implemented on an ongoing basis to comply with Section VIII of this Final Judgment. Defendants must deliver to the United States an affidavit describing any changes to the efforts and actions outlined in Defendants' earlier affidavits filed pursuant to Section IX within fifteen (15) calendar days after the change is implemented.

C. Defendants must keep all records of all efforts made to preserve and divest the Divestiture Assets until one year after the divestiture has been completed.

X. Compliance Inspection

A. For the purposes of determining or securing compliance with this Final Judgment, or of related orders such as a Hold Separate Stipulation and Order, or of determining whether this Final Judgment should be modified or vacated, and subject to any legally-recognized privilege, from time to time authorized representatives of the United States, including agents retained by the United States, must, upon written request of an authorized representative of the Assistant Attorney General in charge of the Antitrust Division, and reasonable notice to Defendants, be permitted:

(1) Access during Defendants' office hours to inspect and copy, or at the option of the United States, to require Defendants to provide electronic copies of all books, ledgers, accounts, records, data, and documents in the possession, custody, or control of Defendants, relating to any matters contained in this Final Judgment; and

(2) to interview, either informally or on the record, Defendants' officers, employees, or agents, who may have their individual counsel present, regarding such matters. The interviews must be subject to the reasonable convenience of the interviewee and without restraint or interference by Defendants.

B. Upon the written request of an authorized representative of the Assistant Attorney General in charge of the Antitrust Division, Defendants must submit written reports or respond to written interrogatories, under oath if requested, relating to any of the matters contained in this Final Judgment.

C. No information or documents obtained pursuant to Section X may be divulged by the United States to any person other than an authorized representative of the executive branch of the United States, except in the course of legal proceedings to which the United States is a party (including grand jury proceedings), for the purpose of securing compliance with this Final Judgment, or as otherwise required by law.

D. In the event of a request by a third party for disclosure of information under the Freedom of Information Act, 5 U.S.C. 552, the Antitrust Division will act in accordance with that statute, and the Department of Justice regulations at 28 CFR part 16, including the provision on confidential commercial information, at 28 CFR 16.7. Defendants submitting information to the Antitrust Division should designate the confidential commercial information portions of all applicable documents and information under 28 CFR 16.7. Designations of confidentiality expire ten years after submission, ''unless the submitter requests and provides justification for a longer designation period.'' *See* 28 CFR 16.7(b).

E. If at the time that Defendants furnish information or documents to the United States pursuant to Section X, Defendants represent and identify in writing information or documents for which a claim of protection may be asserted under Rule 26(c)(1)(G) of the Federal Rules of Civil Procedure, and Defendants mark each pertinent page of such material, ''Subject to claim of protection under Rule 26(c)(1)(G) of the Federal Rules of Civil Procedure,'' the United States must give Defendants ten (10) calendar days' notice before divulging the material in any legal proceeding (other than a grand jury proceeding).

XI. Limitations on Reacquisition

Defendants may not reacquire any part of or any interest in the Divestiture Assets during the term of this Final Judgment.

XII. Retention of Jurisdiction

The Court retains jurisdiction to enable any party to this Final Judgment to apply to the Court at any time for further orders and directions as may be necessary or appropriate to carry out or construe this Final Judgment, to modify any of its provisions, to enforce compliance, and to punish violations of its provisions.

XIII. Enforcement of Final Judgment

A. The United States retains and reserves all rights to enforce the provisions of this Final Judgment, including the right to seek an order of contempt from the Court. Defendants agree that in a civil contempt action, a motion to show cause, or a similar action brought by the United States regarding an alleged violation of this Final Judgment, the United States may establish a violation of this Final Judgment and the appropriateness of a remedy therefor by a preponderance of the evidence, and Defendants waive any argument that a different standard of proof should apply.

B. This Final Judgment should be interpreted to give full effect to the procompetitive purposes of the antitrust laws and to restore the competition the United States alleged was harmed by the challenged conduct. Defendants agree that they may be held in contempt of, and that the Court may enforce, any provision of this Final Judgment that, as interpreted by the Court in light of these procompetitive principles and applying ordinary tools of interpretation, is stated specifically and in reasonable detail, whether or not it is clear and unambiguous on its face. In any such interpretation, the terms of this Final Judgment should not be construed against either party as the drafter.

C. In an enforcement proceeding in which the Court finds that Defendants have violated this Final Judgment, the United States may apply to the Court for a one-time extension of this Final Judgment, together with other relief that may be appropriate. In connection with a successful effort by the United States to enforce this Final Judgment against a Defendant, whether litigated or resolved before litigation, that Defendant agrees to reimburse the United States for the fees and expenses of its attorneys, as well as all other costs, including experts' fees, incurred in connection with that enforcement effort, including in the investigation of the potential violation.

D. For a period of four (4) years following the expiration of this Final Judgment, if the United States has evidence that a Defendant violated this Final Judgment before it expired, the United States may file an action against that Defendant in this Court requesting that the Court order: (1) Defendant to comply with the terms of this Final Judgment for an additional term of at least four years following the filing of the enforcement action; (2) all appropriate contempt remedies; (3) additional relief needed to ensure the Defendant complies with the terms of this Final Judgment; and (4) fees or expenses as called for by Section X.

XIV. Expiration of Final Judgment

Unless the Court grants an extension, this Final Judgment will expire ten (10) years from the date of its entry, except that after five (5) years from the date of its entry, this Final Judgment may be terminated upon notice by the United States to the Court and Defendants that the divestiture has been completed and the continuation of this Final Judgment no longer is necessary or in the public interest.

XV. Public Interest Determination

Entry of this Final Judgment is in the public interest. The parties have complied with the requirements of the Antitrust Procedures and Penalties Act, 15 U.S.C. 16, including by making available to the public copies of this Final Judgment, the Competitive Impact Statement, comments thereon, and the United States' responses to comments. Based upon the record before the Court, which includes the Competitive Impact Statement and any comments and responses to comments filed with the Court, entry of this Final Judgment is in the public interest.

Date: _____

[Court approval subject to procedures of Antitrust Procedures and Penalties Act, 15 U.S.C. 16]

_____

United States District Judge

United States District Court for the Northern District of Ohio

United States of America, Plaintiff, v. *Novelis Inc. and Aleris Corporation,* Defendants.

Case No.: 1:19–cv–02033–CAB

Competitive Impact Statement

The United States of America, under Section 2(b) of the Antitrust Procedures and Penalties Act, 15 U.S.C. 16(b)–(h) (the ''APPA'' or ''Tunney Act''), files this Competitive Impact Statement relating to the proposed Final Judgment submitted for entry in this civil antitrust proceeding.

I. Nature and Purpose of the Proceeding

On July 26, 2018, Defendant Novelis Inc. (''Novelis'') agreed to acquire Defendant Aleris Corporation (''Aleris'') for approximately $2.6 billion, which would have made the combined company the largest supplier of aluminum automotive body sheet (''ABS'') in the United States. The United States filed a civil antitrust Complaint on September 4, 2019, seeking to enjoin the proposed acquisition. The Complaint alleges that the likely effect of this acquisition would be to substantially lessen competition for the development, manufacture, and sale of aluminum ABS in North America, in violation of Section 7 of the Clayton Act, 15 U.S.C. 18.

Before the United States initiated this lawsuit, the United States and Defendants agreed that the lawfulness of the transaction under Section 7 of the Clayton Act (15 U.S.C. 18) hinged on whether aluminum ABS constitutes a relevant product market under the antitrust laws. As set forth in more detail in Plaintiff United States' Explanation of Plan to Refer this Matter to Arbitration (Dkt. 11), the United States, using its authority under the Administrative Dispute Resolution Act of 1996 (''ADRA''), 5 U.S.C. 571 *et seq.,* reached an agreement with Defendants to refer this matter to binding arbitration following fact discovery should the parties be unable to reach a resolution that resolved the United States' competitive concerns with the Defendants' transaction within a certain period of time. Per the arbitration agreement, binding arbitration would resolve a single dispositive issue: whether aluminum ABS constitutes a relevant product market under the antitrust laws. Further, the United States and Defendants agreed that if the United States prevailed in arbitration, the United States would then file a proposed Final Judgment requiring Defendants to divest Aleris's Lewisport Rolling Mill in Lewisport, Kentucky and related assets, which constitute Aleris's entire aluminum ABS operations in North America. The arbitration agreement recognized that the Court would retain jurisdiction to determine whether entry of the proposed Final Judgment is in the public interest. *See* 15 U.S.C. 16(b)–(h). Had Defendants prevailed in arbitration, the arbitration agreement would have required the United States to seek to voluntarily dismiss the Complaint.

To preserve the Divestiture Assets pending the outcome of the arbitration, the Court entered a Hold Separate Stipulation and Order on January 9, 2020, requiring Novelis to hold separate, preserve, and maintain the Divestiture Assets as set forth in the proposed Final Judgment. (Dkt. 41). Under the terms of that Order, Novelis took certain steps to ensure that the Divestiture Assets were preserved and operated in such a way as to ensure that the Divestiture Assets continue to be ongoing, economically viable business units.

On January 21, 2020, following the completion of fact discovery, the Court entered an Order staying proceedings and referring the matter to binding arbitration pursuant to the ADRA, 5 U.S.C. 571, *et seq.* (Dkt. 44). On March 9, 2020, the United States prevailed in arbitration with the arbitrator determining that aluminum ABS is a relevant product market under the antitrust laws. *See* Arbitration Decision, March 9, 2020 (public version) (available at *https://www.justice.gov/atr/case-document/file/1257031/download*).

The United States has therefore filed a proposed Modified Hold Separate Stipulation and Order (''Modified Stipulation and Order'') and a proposed Final Judgment, which are designed to address the anticompetitive effects of the acquisition. Under the proposed Final Judgment, which is explained more fully below, Defendants are required to divest the Divestiture Assets, which include the Lewisport Rolling Mill in Lewisport, Kentucky and Aleris's Innovation Center in Madison Heights, Michigan.

The United States and Defendants have stipulated that the proposed Final Judgment may be entered after compliance with the APPA. Entry of the proposed Final Judgment will terminate this action, except that the Court will retain jurisdiction to construe, modify, or enforce the provisions of the proposed Final Judgment and to punish violations thereof.

II. Description of Events Giving Rise to the Alleged Violation

A. The Defendants and the Proposed Transaction

Novelis is a global manufacturer of semi-finished aluminum products with global revenues of approximately $12.3 billion for the fiscal year ending March 31, 2019. The company is incorporated in Canada and headquartered in Atlanta, Georgia. It operates 23 production facilities in North America, South America, Europe, and Asia. Eight facilities are located in North America, including two (Oswego, New York, and Kingston, Ontario) that currently produce aluminum ABS. Another aluminum ABS finishing line is being commissioned in Guthrie, Kentucky. Novelis supplies flat-rolled aluminum products in three segments: beverage can, specialty, and automotive. Novelis is a wholly-owned subsidiary of Hindalco Industries, Ltd., an Indian company headquartered in Mumbai, India.

Aleris also is a global manufacturer of semi-finished aluminum products. It generated global revenues of approximately $3.4 billion in 2018. Aleris is a Delaware corporation, headquartered in Cleveland, Ohio, and operates 13 production facilities in North America, South America, Europe, and Asia. Aleris supplies flat-rolled aluminum products to the automotive, aerospace, and building and construction industries, among others. Aleris has been a producer of aluminum ABS in Europe since 2002 and exported small volumes of aluminum ABS to North America from its European facility. In 2017, following significant financial and capital investments in its Lewisport, Kentucky facility, Aleris began developing, manufacturing, and selling aluminum ABS from its Lewisport facility to meet growing North American customer demand. Lewisport is a fully integrated manufacturing facility that includes a cast house, as well as cold and hot mill operations. In addition to its hot mill used to manufacture heat-treated aluminum ABS, the Lewisport facility's cold mill continues to produce non-heat-treated aluminum alloys for ''specialty'' products used in the construction industry. The entire Lewisport facility will be divested.

Novelis and Aleris entered into a definitive Agreement and Plan of Merger, dated July 26, 2018, for Novelis to acquire 100 percent of the voting securities of Aleris for an estimated enterprise value of $2.6 billion. As permitted under the terms of the Arbitration Agreement (Dkt. 11–1 at ¶ 5) and the Hold Separate Stipulation and Order entered by the Court on January 9, 2020 (Dkt. 41), Defendants consummated their transaction on April 14, 2020.

B. Industry Background

The North American automotive industry is a vital sector of the

American economy. The industry represents the single largest manufacturing sector in the United States, accounting for about three percent of gross domestic product. For decades, automakers used flat-rolled steel almost exclusively in the construction of automotive bodies. Growing consumer demand for larger vehicles loaded with safety and performance features and increasing fuel economy regulations have led automakers to pursue light-weight designs.

Automakers have turned to aluminum ABS, which is 30 to 40 percent lighter than traditional steel, as the material of choice for light-weighting the next generation of vehicles. Aluminum is more expensive than steel, but has distinct and superior physical properties for automotive use. Vehicles made with aluminum are lighter and more fuel-efficient. Light-weight vehicles also have significant performance advantages including faster acceleration, better handling, shorter braking distance, and increased payload and towing capabilities. Light-weighting designs are also critical for the next generation of electric vehicles. Aluminum ABS can reduce electric vehicle weight substantially, allowing an electric vehicle to run farther on a single charge.

C. Relevant Product Market

As alleged in the Complaint, aluminum ABS is different from other materials used in automotive body sheet applications. Steel and other materials are not practical substitutes for aluminum ABS in many applications. The Complaint alleges that in the event of a small but significant non-transitory price increase, automakers would not substitute away from aluminum ABS in a sufficient volume to make the price increase unprofitable. Therefore, the Complaint alleges that the development, manufacture, and sale of aluminum ABS is a relevant product market and line of commerce within the meaning of Section 7 of the Clayton Act, 15 U.S.C. 18.

Following the completion of fact discovery, the Court referred the matter to arbitration to adjudicate the issue of relevant product market. On March 9, 2020, the arbitrator issued a decision in which he determined that aluminum ABS is a relevant product market under the antitrust laws. See Arbitration Decision, March 9, 2020 (public version) (available at *https://www.justice.gov/atr/case-document/file/1257031/download*). As the arbitrator explained, an automaker can make a car part out of aluminum, steel, or other material, but there are substantial differences in the physical properties of aluminum (as compared to steel), such that an automotive engineer designing a car with particular weight, performance, safety specifications, and target retail price is unlikely to view steel and other materials as full functional substitutes for aluminum for the various car parts being designed. Nor is any other material likely to significantly impact the pricing of aluminum ABS for most car parts, or vice-versa. The development, manufacture, and sale of aluminum ABS is a distinct line of commerce and constitutes a relevant product market.

D. Geographic Market

The Complaint alleges that the relevant geographic market in which to assess the competitive harm from the proposed transaction is North America. When a supplier can price differently based on customer location, the Horizontal Merger Guidelines provide that the relevant geographic market may be defined based on the locations of targeted customers. Such pricing is possible in aluminum ABS as evidenced by the different prices charged by suppliers across geographic regions. Because of transportation costs, import tariffs and duties, the limited shelf life of most types of aluminum ABS, and supply chain risks, customers of aluminum ABS in North America are unlikely to be able to defeat a price increase through arbitrage from outside North America. Pricing differences among suppliers in the various geographic regions in which aluminum ABS is sold has persisted over many years, supporting the conclusion that North America is a relevant geographic market.

The Complaint alleges that, in the event of a small but significant non-transitory increase in the price of the aluminum ABS, customers in North America would not procure these products from suppliers located outside North America in a sufficient volume to make such a price increase unprofitable. Accordingly, the Complaint alleges that North America is a relevant geographic market within the meaning of Section 7 of the Clayton Act.

E. Anticompetitive Effects

The Complaint alleges that Novelis, Aleris, and two other firms are the only producers of aluminum ABS located in North America. Through this acquisition, however, Novelis would gain control of Aleris's uncommitted capacity, eliminating a rival Novelis described as ''poised for transformational growth.'' Aleris and Novelis are the only two firms expected to have sizable uncommitted North American capacity to produce aluminum ABS over the next few years. This consolidation would concentrate more than half of the domestic aluminum ABS production and sales, 60 percent of projected total domestic capacity, and the majority of uncommitted domestic capacity under the control of one firm.

The Complaint alleges that, post-transaction, no other firms would have the incentive and ability to constrain Novelis. The transaction would result in higher prices, as well as reduced innovation and technical support for automakers that rely on this critical input. According to the Complaint, the proposed acquisition, therefore, would likely substantially lessen competition in the development, manufacture, and sale of aluminum ABS in North America in violation of Section 7 of the Clayton Act.

F. Absence of Countervailing Factors: Entry

The Complaint alleges that entry or expansion by existing competitors is unlikely to prevent or remedy the transaction's likely anticompetitive effects in the market for the development, manufacture, and sale of aluminum ABS in North America. The North American aluminum ABS market has significant barriers to entry. Barriers include the high cost and long time-frame needed to build production facilities. For example, to compete in the automotive market, aluminum companies generally must build a specialized ''heat-treat'' finishing line to make aluminum sheet for automotive applications. These heat-treat finishing lines take years to build and cost hundreds of millions of dollars to construct, and require sophisticated technological know-how to operate. In addition to heat-treat finishing lines, aluminum ABS suppliers need aluminum coils that are wide enough for automotive applications. These aluminum coils are produced at hot mills, and there are only a few hot mills in North America. Building a new hot mill takes several years and requires a significant capital investment of well over a billion dollars. Meanwhile, expanding or re-outfitting an existing facility to have auto-capable hot mill capacity could also require several hundred million dollars. Moreover, because of supply chain risks and other factors, the Complaint alleges that customers of the merged firm (*i.e.,* North American automakers) are unlikely to turn to foreign suppliers of aluminum

ABS in sufficient volume to mitigate the anticompetitive effects of the merger.

III. Explanation of the Proposed Final Judgment

The divestiture required by the proposed Final Judgment addresses the United States' concerns with the merger and will fully remedy the loss of competition threatened by this merger by requiring the merged firm to divest Aleris's North American aluminum ABS operations in their entirety. In doing so, the divestiture will establish an independent and economically viable competitor with the scale and scope to compete effectively and preserve competition in the market for the development, manufacture, and sale of aluminum ABS in North America.

Paragraph IV(A) of the proposed Final Judgment requires Defendants to divest the Divestiture Assets within the later of ninety (90) calendar days of the filing of the Modified Stipulation and Order, or thirty (30) days after the Regulatory Approvals have been received, to an acquirer acceptable to the United States, in its sole discretion. Paragraph IV(A) provides that the United States, in its sole discretion, may grant one or more extensions of the divestiture period, up to a total of 180 days. The proposed Final Judgment includes the possibility of an additional 180 days to accomplish the divestiture due to the current business climate and the potential impact of the COVID–19 pandemic on Defendants' ability to accomplish the divestiture within the specified period.

The divestiture includes two facilities (one production facility in Lewisport, Kentucky (''the Lewisport Rolling Mill'') and one technical service center located in Madison Heights, Michigan (''the Innovation Center'')); and all other tangible and intangible assets related to or used in connection with the Lewisport Rolling Mill. Paragraph IV(J) of the proposed Final Judgment requires that the Divestiture Assets must be divested in such a way as to satisfy the United States, in its sole discretion, that the Divestiture Assets can and will be operated by the purchaser as part of a viable, ongoing business that can compete effectively in the development, manufacture, and sale of aluminum ABS.

The proposed Final Judgment contains provisions to facilitate the immediate use of the Divestiture Assets by the acquirer. Paragraph IV(H) of the proposed Final Judgment requires Defendants, at the acquirer's option, to enter into a transition services agreement on or before the date on which the Divestiture Assets are divested to the acquirer for service and support relating to the Divestiture Assets for a period of up to twelve (12) months. That paragraph further provides that the United States, in its sole discretion, may approve one or more extensions of this transition services agreement for up to a total of an additional six (6) months. Paragraph IV(H) also provides that employees of Defendants tasked with providing any transition services must not share any competitively sensitive information of the acquirer with any other employee of Defendants.

The proposed Final Judgment also contains provisions intended to facilitate the acquirer's efforts to hire employees engaged in the Divestiture Assets. Paragraph IV(C) of the proposed Final Judgment requires Defendants to provide the acquirer with organization charts and information relating to these employees and to make them available for interviews, and it provides that Defendants must not interfere with any negotiations by the acquirer to hire them. In addition, Paragraph IV(C)(5) provides that, for employees who elect employment with the acquirer, Defendants must waive all non-compete and non-disclosure agreements, vest all unvested pension and other equity rights, and provide all benefits that the employees would generally be provided if transferred to a buyer of an ongoing business. This paragraph further provides that, for a period of twelve (12) months from the filing of the Complaint, Defendants may not solicit to hire or hire any employee engaged in the Divestiture Assets who was hired by the acquirer, unless that individual is terminated or laid off by the acquirer or the acquirer agrees in writing that Defendants may solicit or hire that individual.

If Defendants do not accomplish the divestiture within the period prescribed in the proposed Final Judgment, Section V of the proposed Final Judgment provides that the Court will appoint a divestiture trustee selected by the United States to effect the divestiture. If a divestiture trustee is appointed, the proposed Final Judgment provides that Defendants will pay all costs and expenses of the trustee. The divestiture trustee's commission will be structured so as to provide an incentive for the trustee based on the price obtained and the speed with which the divestiture is accomplished. After the divestiture trustee's appointment becomes effective, the trustee will provide periodic reports to the United States setting forth his or her efforts to accomplish the divestiture. At the end of six (6) months, if the divestiture has not been accomplished, the divestiture trustee and the United States will make recommendations to the Court, which will enter such orders as appropriate, in order to carry out the purpose of the trust, including by extending the trust or the term of the divestiture trustee's appointment.

The proposed Final Judgment also contains provisions designed to promote compliance and make the enforcement of the Final Judgment as effective as possible. Paragraph XIV(A) provides that the United States retains and reserves all rights to enforce the provisions of the Final Judgment, including its rights to seek an order of contempt from the Court. Under the terms of this paragraph, Defendants have agreed that in any civil contempt action, any motion to show cause, or any similar action brought by the United States regarding an alleged violation of the Final Judgment, the United States may establish the violation and the appropriateness of any remedy by a preponderance of the evidence and that Defendants have waived any argument that a different standard of proof should apply. This provision aligns the standard for compliance obligations with the standard of proof that applies to the underlying offense that the compliance commitments address.

Paragraph XIV(B) provides additional clarification regarding the interpretation of the provisions of the proposed Final Judgment. The proposed Final Judgment is intended to restore competition the United States alleged would otherwise be harmed by the transaction. Defendants agree that they will abide by the proposed Final Judgment, and that they may be held in contempt of this Court for failing to comply with any provision of the proposed Final Judgment that is stated specifically and in reasonable detail, as interpreted in light of this procompetitive purpose.

Paragraph XIV(C) of the proposed Final Judgment provides that if the Court finds in an enforcement proceeding that Defendants have violated the Final Judgment, the United States may apply to the Court for a one-time extension of the Final Judgment, together with such other relief as may be appropriate. In addition, to compensate American taxpayers for any costs associated with investigating and enforcing violations of the Final Judgment, Paragraph XIV(C) provides that in any successful effort by the United States to enforce the Final Judgment against a Defendant, whether litigated or resolved before litigation, that Defendant will reimburse the United States for attorneys' fees, experts' fees, and other costs incurred in connection with any enforcement effort,

including the investigation of the potential violation.

Paragraph XIV(D) states that the United States may file an action against a Defendant for violating the Final Judgment for up to four (4) years after the Final Judgment has expired or been terminated. This provision is meant to address circumstances such as when evidence that a violation of the Final Judgment occurred during the term of the Final Judgment is not discovered until after the Final Judgment has expired or been terminated or when there is not sufficient time for the United States to complete an investigation of an alleged violation until after the Final Judgment has expired or been terminated. This provision, therefore, makes clear that, for four (4) years after the Final Judgment has expired or been terminated, the United States may still challenge a violation that occurred during the term of the Final Judgment.

Finally, Section XV of the proposed Final Judgment provides that the Final Judgment will expire ten (10) years from the date of its entry, except that after five (5) years from the date of its entry, the Final Judgment may be terminated upon notice by the United States to the Court and Defendants that the divestiture has been completed and that the continuation of the Final Judgment is no longer necessary or in the public interest.

IV. Remedies Available to Potential Private Litigants

Section 4 of the Clayton Act, 15 U.S.C. 15, provides that any person who has been injured as a result of conduct prohibited by the antitrust laws may bring suit in federal court to recover three times the damages the person has suffered, as well as costs and reasonable attorneys' fees. Entry of the proposed Final Judgment neither impairs nor assists the bringing of any private antitrust damage action. Under the provisions of Section 5(a) of the Clayton Act, 15 U.S.C. 16(a), the proposed Final Judgment has no prima facie effect in any subsequent private lawsuit that may be brought against Defendants.

V. Procedures Available for Modification of the Proposed Final Judgment

The United States and Defendants have stipulated that the proposed Final Judgment may be entered by the Court after compliance with the provisions of the APPA, provided that the United States has not withdrawn its consent. The APPA conditions entry upon the Court's determination that the proposed Final Judgment is in the public interest.

The APPA provides a period of at least 60 days preceding the effective date of the proposed Final Judgment within which any person may submit to the United States written comments regarding the proposed Final Judgment. Any person who wishes to comment should do so within 60 days of the date of publication of this Competitive Impact Statement in the **Federal Register**, or the last date of publication in a newspaper of the summary of this Competitive Impact Statement, whichever is later. All comments received during this period will be considered by the U.S. Department of Justice, which remains free to withdraw its consent to the proposed Final Judgment at any time before the Court's entry of the Final Judgment. The comments and the response of the United States will be filed with the Court. In addition, comments will be posted on the U.S. Department of Justice, Antitrust Division's internet website and, under certain circumstances, published in the **Federal Register**.

Written comments should be submitted to:

Katrina Rouse, Chief, Defense, Industrials, and Aerospace Section, Antitrust Division, U.S. Department of Justice, 450 Fifth Street NW, Suite 8700, Washington, DC 20530.

The proposed Final Judgment provides that the Court retains jurisdiction over this action, and the parties may apply to the Court for any order necessary or appropriate for the modification, interpretation, or enforcement of the Final Judgment.

VI. Alternatives to the Proposed Final Judgment

As an alternative to the binding arbitration on the issue of relevant product market definition and the proposed Final Judgment, the United States considered a full trial on the merits against Defendants. The United States could have sought preliminary and permanent injunctions against Novelis's acquisition of Aleris. The United States is satisfied, however, that the divestiture of assets described in the proposed Final Judgment will remedy the anticompetitive effects alleged in the Complaint, preserving competition for the development, manufacture, and sale of aluminum ABS in North America. Thus, the proposed Final Judgment achieves all or substantially all of the relief the United States would have obtained through litigation, but avoids the time, expense, and uncertainty of a full trial on the merits of the Complaint.

VII. Standard of Review Under the APPA For the Proposed Final Judgment

The Clayton Act, as amended by the APPA, requires that proposed consent judgments in antitrust cases brought by the United States be subject to a 60-day comment period, after which the Court shall determine whether entry of the proposed Final Judgment ''is in the public interest.'' 15 U.S.C. 16(e)(1). In making that determination, the Court, in accordance with the statute as amended in 2004, is required to consider:

(A) The competitive impact of such judgment, including termination of alleged violations, provisions for enforcement and modification, duration of relief sought, anticipated effects of alternative remedies actually considered, whether its terms are ambiguous, and any other competitive considerations bearing upon the adequacy of such judgment that the court deems necessary to a determination of whether the consent judgment is in the public interest; and

(B) the impact of entry of such judgment upon competition in the relevant market or markets, upon the public generally and individuals alleging specific injury from the violations set forth in the complaint including consideration of the public benefit, if any, to be derived from a determination of the issues at trial.

15 U.S.C. 16(e)(1)(A) & (B). In considering these statutory factors, the Court's inquiry is necessarily a limited one as the government is entitled to ''broad discretion to settle with the defendant within the reaches of the public interest.'' *United States* v. *Microsoft Corp.,* 56 F.3d 1448, 1461 (D.C. Cir. 1995); *see also United States, et al.* v. *Hillsdale Community Health Ctr.,* No. 15–12311 (JEL), 2015 WL 10013774 at *1 (E.D. Mich. Oct. 21, 2015) (''[T]he Court's review is limited to deciding whether the proposed final judgment is in the ''public interest;'' the Court is without authority to modify it.'') (citations omitted); *United States* v. *U.S. Airways Grp., Inc.,* 38 F. Supp. 3d 69, 75 (D.D.C. 2014) (explaining that the ''court's inquiry is limited'' in Tunney Act settlements); *United States* v. *InBev N.V./S.A.,* No. 08–1965 (JR), 2009 U.S. Dist. LEXIS 84787, at *3 (D.D.C. Aug. 11, 2009) (noting that a court's review of a consent judgment is limited and only inquires ''into whether the government's determination that the proposed remedies will cure the antitrust violations alleged in the complaint was reasonable, and whether the mechanism to enforce the final judgment are clear and manageable'').

As the U.S. Court of Appeals for the District of Columbia Circuit has held, under the APPA a court considers, among other things, the relationship between the remedy secured and the specific allegations in the government's complaint, whether the proposed Final Judgment is sufficiently clear, whether its enforcement mechanisms are sufficient, and whether it may positively harm third parties. *See Microsoft,* 56 F.3d at 1458–62. With respect to the adequacy of the relief secured by the proposed Final Judgment, a court may not ''make de novo determination of facts and issues.'' *United States* v. *W. Elec. Co.,* 993 F.2d 1572, 1577 (D.C. Cir. 1993) (quotation marks omitted); *see also Microsoft,* 56 F.3d at 1460–62; *United States* v. *Alcoa, Inc.,* 152 F. Supp. 2d 37, 40 (D.D.C. 2001); *United States* v. *Enova Corp.,* 107 F. Supp. 2d 10, 16 (D.D.C. 2000); *InBev,* 2009 U.S. Dist. LEXIS 84787, at *3. Instead, ''[t]he balancing of competing social and political interests affected by a proposed antitrust consent decree must be left, in the first instance, to the discretion of the Attorney General.'' *W. Elec. Co.,* 993 F.2d at 1577 (quotation marks omitted). ''The court should bear in mind the *flexibility* of the public interest inquiry: the court's function is not to determine whether the resulting array of rights and liabilities is one that will *best* serve society, but only to confirm that the resulting settlement is within the *reaches* of the public interest.'' *Microsoft,* 56 F.3d at 1460 (quotation marks omitted); *see also United States* v. *Deutsche Telekom AG,* No. 19–2232 (TJK), 2020 WL 1873555, at *7 (D.D.C. Apr. 14, 2020). More demanding requirements would ''have enormous practical consequences for the government's ability to negotiate future settlements,'' contrary to congressional intent. *Id.* at 1456. ''The Tunney Act was not intended to create a disincentive to the use of the consent decree.'' *Id.*

The United States' predictions about the efficacy of the remedy are to be afforded deference by the Court. *See, e.g., Microsoft,* 56 F.3d at 1461 (recognizing courts should give ''due respect to the Justice Department's . . . view of the nature of its case''); *United States* v. *Iron Mountain, Inc.,* 217 F. Supp. 3d 146, 152–53 (D.D.C. 2016) (''In evaluating objections to settlement agreements under the Tunney Act, a court must be mindful that [t]he government need not prove that the settlements will perfectly remedy the alleged antitrust harms[;] it need only provide a factual basis for concluding that the settlements are reasonably adequate remedies for the alleged harms.'') (internal citations omitted); *United States* v. *Republic Servs., Inc.,* 723 F. Supp. 2d 157, 160 (D.D.C. 2010) (noting ''the deferential review to which the government's proposed remedy is accorded''); *United States* v. *Archer-Daniels-Midland Co.,* 272 F. Supp. 2d 1, 6 (D.D.C. 2003) (''A district court must accord due respect to the government's prediction as to the effect of proposed remedies, its perception of the market structure, and its view of the nature of the case.''). The ultimate question is whether ''the remedies [obtained by the Final Judgment are] so inconsonant with the allegations charged as to fall outside of the 'reaches of the public interest.' '' *Microsoft,* 56 F.3d at 1461 (*quoting W. Elec. Co.,* 900 F.2d at 309).

Moreover, the Court's role under the APPA is limited to reviewing the remedy in relationship to the violations that the United States has alleged in its complaint, and does not authorize the Court to ''construct [its] own hypothetical case and then evaluate the decree against that case.'' *Microsoft,* 56 F.3d at 1459; *see also U.S. Airways,* 38 F. Supp. 3d at 75 (noting that the court must simply determine whether there is a factual foundation for the government's decisions such that its conclusions regarding the proposed settlements are reasonable); *InBev,* 2009 U.S. Dist. LEXIS 84787, at *20 (''[T]he 'public interest' is not to be measured by comparing the violations alleged in the complaint against those the court believes could have, or even should have, been alleged.''); *United States* v. *Alcan Aluminum Ltd.,* 605 F. Supp. 619, 622 (W.D. Ky. 1985) (approving the consent decree even though the court would have imposed a greater remedy). Because the ''court's authority to review the decree depends entirely on the government's exercising its prosecutorial discretion by bringing a case in the first place,'' it follows that ''the court is only authorized to review the decree itself,'' and not to ''effectively redraft the complaint'' to inquire into other matters that the United States did not pursue. *Microsoft,* 56 F.3d at 1459–60.

In its 2004 amendments to the APPA, Congress made clear its intent to preserve the practical benefits of using consent judgments proposed by the United States in antitrust enforcement, Pubic Law 108–237 § 221, and added the unambiguous instruction that ''[n]othing in this section shall be construed to require the court to conduct an evidentiary hearing or to require the court to permit anyone to intervene.'' 15 U.S.C. 16(e)(2); *see also U.S. Airways,* 38 F. Supp. 3d at 76 (indicating that a court is not required to hold an evidentiary hearing or to permit intervenors as part of its review under the Tunney Act). This language explicitly wrote into the statute what Congress intended when it first enacted the Tunney Act in 1974. As Senator Tunney explained: ''[t]he court is nowhere compelled to go to trial or to engage in extended proceedings which might have the effect of vitiating the benefits of prompt and less costly settlement through the consent decree process.'' 119 Cong. Rec. 24,598 (1973) (statement of Sen. Tunney). ''A court can make its public interest determination based on the competitive impact statement and response to public comments alone.'' *U.S. Airways,* 38 F. Supp. 3d at 76 (citing *Enova Corp.,* 107 F. Supp. 2d at 17).

VIII. Determinative Documents

In formulating the proposed Final Judgment, the United States considered the Arbitration Agreement (Exhibit A to Plaintiff United States' Explanation of Plan to Refer this Matter to Arbitration (Dkt. 11–1)), and the Arbitration Decision (available at *https://www.justice.gov/atr/case-document/file/1257031/download*). Under the Tunney Act, the United States must provide copies of documents it considered determinative in formulating its remedy proposal. (*See* 15 U.S.C. 16(b)). The Arbitration Agreement is a determinative document because it (a) establishes that the parties agree to file a proposed Final Judgment requiring Defendants to divest Aleris's Lewisport Rolling Mill in Lewisport, Kentucky should the United States prevail in arbitration and (b) establishes that the arbitration addresses one dispositive legal issue: Whether aluminum ABS is a relevant product market. The Arbitration Decision is a determinative document because it provides the reasoning for the arbitrator's decision, after hearing evidence, that aluminum ABS is a relevant product market. There are no other determinative materials or documents within the meaning of the APPA that were considered by the United States in formulating the proposed Final Judgment.

Dated: May 12, 2020

Respectfully submitted,

FOR PLAINTIFF UNITED STATES OF AMERICA

Samer M. Musallam (Ohio #0070472)

Lowell R. Stern

United States Department of Justice, Antitrust Division, DIA Section, 450 Fifth Street NW, Suite 8700, Washington, DC 20530, Tel.: (202) 598–2990, Email:

samer.musallam@usdoj.gov, Email: lowell.stern@usdoj.gov.

Attorneys for Plaintiff United States

[FR Doc. 2020–11073 Filed 5–21–20; 8:45 am]

BILLING CODE 4410–11–P

DEPARTMENT OF JUSTICE

Drug Enforcement Administration

[Docket No. DEA–645]

Bulk Manufacturer of Controlled Substances Application: Noramco, Inc.

ACTION: Notice of application.

DATES: Registered bulk manufacturers of the affected basic class(es), and applicants therefore, may file written comments on or objections to the issuance of the proposed registration on or before July 21, 2020.

ADDRESSES: Written comments should be sent to: Drug Enforcement Administration, Attention: DEA Federal Register Representative/DPW, 8701 Morrissette Drive, Springfield, Virginia 22152.

SUPPLEMENTARY INFORMATION: In accordance with 21 CFR 1301.33(a), this is notice that on February 26, 2020, Noramco, Inc., 500 Swedes Landing Road, Wilmington, Delaware 19801–4417, applied to be registered as a bulk manufacturer of the following basic class(es) of controlled substances:

Controlled substance	Drug code	Schedule
Marihuana	7360	I
Tetrahydrocannabinols	7370	I
Codeine-N-oxide	9053	I
Dihydromorphine	9145	I
Hydromorphinol	9301	I
Morphine-N-oxide	9307	I
Amphetamine	1100	II
Lisdexamfetamine	1205	II
Methylphenidate	1724	II
Nabilone	7379	II
Phenylacetone	8501	II
Codeine	9050	II
Dihydrocodeine	9120	II
Oxycodone	9143	II
Hydromorphone	9150	II
Hydrocodone	9193	II
Morphine	9300	II
Oripavine	9330	II
Thebaine	9333	II
Opium extracts	9610	II
Opium fluid extract	9620	II
Opium tincture	9630	II
Opium, powdered	9639	II
Opium, granulated	9640	II
Oxymorphone	9652	II
Noroxymorphone	9668	II
Tapentadol	9780	II

The company plans to manufacture the listed controlled substances as an Active Pharmaceutical Ingredient (API) for supply to its customers. In reference to drug codes 7360 (Marihuana) and 7370 (Tetrahydrocannabinols), the company plans to bulk manufacture these drugs as synthetics. No other activities for these drug codes are authorized for this registration. This notice does not constitute an evaluation or determination of the merits of the company's application.

William T. McDermott,

Assistant Administrator.

[FR Doc. 2020–11077 Filed 5–21–20; 8:45 am]

BILLING CODE 4410–09–P

DEPARTMENT OF JUSTICE

National Institute of Corrections

Advisory Board; Notice of Meeting

This notice announces a forthcoming virtual meeting of the National Institute of Corrections (NIC) Advisory Board. The meeting will be open to the public.

Name of the Committee: NIC Advisory Board.

General Function of the Committee: To aid the National Institute of Corrections in developing long-range plans, advise on program development, and recommend guidance to assist NIC's efforts in the areas of training, technical assistance, information services, and policy/program development assistance to Federal, state, and local corrections agencies.

Date and Time: 11:00 a.m.–1:30 p.m. on Friday, June 19, 2020 (approximate).

Location: Virtual Platform.

Contact Person: Susan Walters, Executive Assistant, National Institute of Corrections, 320 First Street NW, Room 901–3, Washington, DC 20534. To contact Ms. Walters, please call (202) 353–4213.

Agenda: On Friday, June 19, 2020, the Advisory Board will receive a brief Agency Report from the NIC Acting Director, with time for questions and planning for subsequent FY20–FY21 Advisory Board meeting(s).

Procedure: On June 19, 2020, the meeting is open to the public. Interested persons may present data, information, or views, orally or in writing, on issues pending before the committee. Written submissions may be made to the contact person on or before June 8, 2020. Oral presentations from the public will be scheduled between approximately 1:00 p.m. to 1:15 p.m. on June 19, 2020. Time allotted for each presentation may be limited. Those desiring to make formal oral presentations should notify the contact person and submit a brief statement of the general nature of the evidence or arguments they wish to present, the names and addresses of proposed participants, and an indication of the approximate time requested to make their presentation on or before June 8, 2020.

General Information: NIC welcomes the attendance of the public at its advisory committee meetings and will make every effort to accommodate persons with physical disabilities or special needs. If you require special accommodations due to a disability, please contact Susan Walters at least 7 days in advance of the meeting. Notice of this meeting is given under the Federal Advisory Committee Act (5 U.S.C. app. 2).

Shaina Vanek,

Acting Director, National Institute of Corrections.

[FR Doc. 2020–11051 Filed 5–21–20; 8:45 am]

BILLING CODE 4410–36–P

DEPARTMENT OF LABOR

Office of the Secretary

Agency Information Collection Activities; Submission for OMB Review; Comment Request; Notice to Employees of Coverage Options Under Fair Labor Standards Act Section 18B

ACTION: Notice of availability; request for comments.

SUMMARY: The Department of Labor (DOL) is submitting this Employee Benefits Security Administration (EBSA)-sponsored information collection request (ICR) to the Office of Management and Budget (OMB) for review and approval in accordance with the Paperwork Reduction Act of 1995 (PRA). Public comments on the ICR are invited.

DATES: The OMB will consider all written comments that agency receives on or before June 22, 2020.

ADDRESSES: Written comments and recommendations for the proposed information collection should be sent within 30 days of publication of this notice to *www.reginfo.gov/public/do/PRAMain.* Find this particular information collection by selecting ''Currently under 30-day Review—Open for Public Comments'' or by using the search function.

Comments are invited on: (1) Whether the collection of information is necessary for the proper performance of the functions of the Department, including whether the information will have practical utility; (2) if the information will be processed and used

in a timely manner; (3) the accuracy of the agency's estimates of the burden and cost of the collection of information, including the validity of the methodology and assumptions used; (4) ways to enhance the quality, utility and clarity of the information collection; and (5) ways to minimize the burden of the collection of information on those who are to respond, including the use of automated collection techniques or other forms of information technology.

FOR FURTHER INFORMATION CONTACT: Anthony May by telephone at 202–693–4129 (this is not a toll-free number) or by email at *DOL_PRA_PUBLIC@dol.gov.*

SUPPLEMENTARY INFORMATION: Section 18B of the Fair Labor Standards Act (FLSA), as added by section 1512 of the Affordable Care Act, generally provides that, in accordance with regulations promulgated by the Secretary of Labor, an applicable employer must provide each employee at the time of hiring (or with respect to current employees, not later than March 1, 2013), a written notice: (1) Informing the employee of the existence of Exchanges including a description of the services provided by the Exchanges, and the manner in which the employee may contact Exchanges to request assistance; (2) If the employer plan's share of the total allowed costs of benefits provided under the plan is less than 60 percent of such costs, that the employee may be eligible for a premium tax credit under section 36B of the Internal Revenue Code (the Code) if the employee purchases a qualified health plan through an Exchange; and (3) If the employee purchases a qualified health plan through an Exchange, the employee may lose the employer contribution (if any) to any health benefits plan offered by the employer and that all or a portion of such contribution may be excludable from income for Federal income tax purposes. The model notice is being provided by the Department to facilitate compliance with FLSA section 18B. The Department has received approval from OMB for this ICR under OMB Control No. 1210–0149. For additional substantive information about this ICR, see the related notice published in the **Federal Register** on October 10, 2019 (84 FR 54642).

This information collection is subject to the PRA. A Federal agency generally cannot conduct or sponsor a collection of information, and the public is generally not required to respond to an information collection, unless the OMB approves it and displays a currently valid OMB Control Number. In addition, notwithstanding any other provisions of law, no person shall generally be subject to penalty for failing to comply with a collection of information that does not display a valid OMB Control Number. *See* 5 CFR 1320.5(a) and 1320.6.

DOL seeks PRA authorization for this information collection for three (3) years. OMB authorization for an ICR cannot be for more than three (3) years without renewal. The DOL notes that information collection requirements submitted to the OMB for existing ICRs receive a month-to-month extension while they undergo review.

Agency: DOL–EBSA.

Title of Collection: Notice to Employees of Coverage Options Under Fair Labor Standards Act Section 18B.

OMB Control Number: 1210–0149.

Affected Public: Private Sector: Businesses or other for-profits, farms, not-for-profit institutions; state, local, and tribal governments.

Total Estimated Number of Respondents: 147,270,126.

Total Estimated Number of Responses: 32,068,268.

Total Estimated Annual Time Burden: 116,421 hours.

Total Estimated Annual Other Costs Burden: $5,238,964.

Authority: 44 U.S.C. 3507(a)(1)(D).

Dated: May 18, 2020.

Anthony May,

Acting Departmental Clearance Officer.

[FR Doc. 2020–11052 Filed 5–21–20; 8:45 am]

BILLING CODE 4510–29–P

DEPARTMENT OF LABOR

Office of the Secretary

Agency Information Collection Activities; Submission for OMB Review; Comment Request; Administration of the Longshore and Harbor Workers' Compensation Act

ACTION: Notice of availability; request for comments.

SUMMARY: The Department of Labor (DOL) is submitting this Office of Workers' Compensation Programs (OWCP)-sponsored information collection request (ICR) to the Office of Management and Budget (OMB) for review and approval in accordance with the Paperwork Reduction Act of 1995 (PRA). Public comments on the ICR are invited.

DATES: The OMB will consider all written comments that agency receives on or before June 22, 2020.

ADDRESSES: Written comments and recommendations for the proposed information collection should be sent within 30 days of publication of this notice to *www.reginfo.gov/public/do/PRAMain.* Find this particular information collection by selecting ''Currently under 30-day Review—Open for Public Comments'' or by using the search function.

Comments are invited on: (1) Whether the collection of information is necessary for the proper performance of the functions of the Department, including whether the information will have practical utility; (2) if the information will be processed and used in a timely manner; (3) the accuracy of the agency's estimates of the burden and cost of the collection of information, including the validity of the methodology and assumptions used; (4) ways to enhance the quality, utility and clarity of the information collection; and (5) ways to minimize the burden of the collection of information on those who are to respond, including the use of automated collection techniques or other forms of information technology.

FOR FURTHER INFORMATION CONTACT: Crystal Rennie by telephone at (202) 693–0456 (this is not a toll-free number) or by email at *DOL_PRA_PUBLIC@dol.gov.*

SUPPLEMENTARY INFORMATION: The regulations and forms cover the submission of information relating to the processing of claims for benefits under the Longshore Act and extensions. A new form, LS–272 (Application to Write Insurance) is added to this collection. For additional substantive information about this ICR, see the related notice published in the **Federal Register** on February 27, 2020 (85 FR 11397).

This information collection is subject to the PRA. A Federal agency generally cannot conduct or sponsor a collection of information, and the public is generally not required to respond to an information collection, unless the OMB approves it and displays a currently valid OMB Control Number. In addition, notwithstanding any other provisions of law, no person shall generally be subject to penalty for failing to comply with a collection of information that does not display a valid OMB Control Number. *See* 5 CFR 1320.5(a) and 1320.6.

DOL seeks PRA authorization for this information collection for three (3) years. OMB authorization for an ICR cannot be for more than three (3) years without renewal. The DOL notes that information collection requirements submitted to the OMB for existing ICRs receive a month-to-month extension while they undergo review.

Agency: DOL–OWCP.

Title of Collection: Administration of the Longshore and Harbor Workers' Compensation Act.

OMB Control Number: 1240–0014.

Affected Public: Private Sector—businesses or other for-profit.

Total Estimated Number of Respondents: 53,842.

Total Estimated Number of Responses: 53,842.

Total Estimated Annual Time Burden: 20,752 hours.

Total Estimated Annual Other Costs Burden: $9,525.

Authority: 44 U.S.C. 3507(a)(1)(D).

Dated: May 18, 2020.

Anthony May,

Acting Departmental Clearance Officer.

[FR Doc. 2020–11037 Filed 5–21–20; 8:45 am]

BILLING CODE 4510–CF–P

DEPARTMENT OF LABOR

Office of the Secretary

Agency Information Collection Activities; Submission for OMB Review; Comment Request; Application for Continuation of Death Benefit for Student

ACTION: Notice of availability; request for comments.

SUMMARY: The Department of Labor (DOL) is submitting this Office of Worker's Compensation Program (OWCP)-sponsored information collection request (ICR) to the Office of Management and Budget (OMB) for review and approval in accordance with the Paperwork Reduction Act of 1995 (PRA). Public comments on the ICR are invited.

DATES: The OMB will consider all written comments that agency receives on or before June 22, 2020.

ADDRESSES: Written comments and recommendations for the proposed information collection should be sent within 30 days of publication of this notice to *www.reginfo.gov/public/do/PRAMain.* Find this particular information collection by selecting ''Currently under 30-day Review—Open for Public Comments'' or by using the search function.

Comments are invited on: (1) Whether the collection of information is necessary for the proper performance of the functions of the Department, including whether the information will have practical utility; (2) if the information will be processed and used in a timely manner; (3) the accuracy of the agency's estimates of the burden and cost of the collection of information, including the validity of the methodology and assumptions used; (4) ways to enhance the quality, utility and clarity of the information collection; and (5) ways to minimize the burden of the collection of information on those who are to respond, including the use of automated collection techniques or other forms of information technology.

FOR FURTHER INFORMATION CONTACT: Crystal Rennie by telephone at 202–693–0456, or by email at *DOL_PRA_PUBLIC@dol.gov.*

SUPPLEMENTARY INFORMATION: Form LS–266 is used as an application for continuation of death benefits for a dependent who is a student. For additional substantive information about this ICR, see the related notice published in the **Federal Register** on March 17, 2020 (85 FR 15230).

This information collection is subject to the PRA. A Federal agency generally cannot conduct or sponsor a collection of information, and the public is generally not required to respond to an information collection, unless the OMB approves it and displays a currently valid OMB Control Number. In addition, notwithstanding any other provisions of law, no person shall generally be subject to penalty for failing to comply with a collection of information that does not display a valid OMB Control Number. *See* 5 CFR 1320.5(a) and 1320.6.

DOL seeks PRA authorization for this information collection for three (3) years. OMB authorization for an ICR cannot be for more than three (3) years without renewal. The DOL notes that information collection requirements submitted to the OMB for existing ICRs receive a month-to-month extension while they undergo review.

Agency: DOL–OWCP.

Title of Collection: Application for Continuation of Death Benefit for Student.

OMB Control Number: 1240–0026.

Affected Public: Individuals or Households.

Total Estimated Number of Respondents: 20.

Total Estimated Number of Responses: 20.

Total Estimated Annual Time Burden: 10 hours.

Total Estimated Annual Other Costs Burden: $6.

Authority: 44 U.S.C. 3507(a)(1)(D).

Dated: May 18, 2020.

Anthony May,

Acting Departmental Clearance Officer.

[FR Doc. 2020–11038 Filed 5–21–20; 8:45 am]

BILLING CODE 4510–CF–P

DEPARTMENT OF LABOR

Office of the Secretary

Agency Information Collection Activities; Submission for OMB Review; Comment Request; Student Experience Assessment of Job Corps Centers

ACTION: Notice of availability; request for comments.

SUMMARY: The Department of Labor (DOL) is submitting this Employment and Training Administration (ETA)-sponsored information collection request (ICR) to the Office of Management and Budget (OMB) for review and approval in accordance with the Paperwork Reduction Act of 1995 (PRA). Public comments on the ICR are invited.

DATES: The OMB will consider all written comments that agency receives on or before June 22, 2020.

ADDRESSES: Written comments and recommendations for the proposed information collection should be sent within 30 days of publication of this notice to *www.reginfo.gov/public/do/PRAMain.* Find this particular information collection by selecting ''Currently under 30-day Review—Open for Public Comments'' or by using the search function.

Comments are invited on: (1) Whether the collection of information is necessary for the proper performance of the functions of the Department, including whether the information will have practical utility; (2) if the information will be processed and used in a timely manner; (3) the accuracy of the agency's estimates of the burden and cost of the collection of information, including the validity of the methodology and assumptions used; (4) ways to enhance the quality, utility and clarity of the information collection; and (5) ways to minimize the burden of the collection of information on those who are to respond, including the use of automated collection techniques or other forms of information technology.

FOR FURTHER INFORMATION CONTACT: Crystal Rennie by telephone at 202–693–0456, by email at *DOL_PRA_PUBLIC@dol.gov.*

SUPPLEMENTARY INFORMATION: The Department of Labor's Office of Job Corps (OJC) is seeking approval from the Office of Management and Budget (OMB) for a new Student Experience Assessment. The collection of information through this assessment is necessary for program evaluation to gauge active students' satisfaction with the Job Corps program. For additional

substantive information about this ICR, see the related notice published in the **Federal Register** on August 9, 2019 (84 FR 39374).

This information collection is subject to the PRA. A Federal agency generally cannot conduct or sponsor a collection of information, and the public is generally not required to respond to an information collection, unless the OMB approves it and displays a currently valid OMB Control Number. In addition, notwithstanding any other provisions of law, no person shall generally be subject to penalty for failing to comply with a collection of information that does not display a valid OMB Control Number. *See* 5 CFR 1320.5(a) and 1320.6.

DOL seeks PRA authorization for this information collection for three (3) years. OMB authorization for an ICR cannot be for more than three (3) years without renewal. The DOL notes that information collection requirements submitted to the OMB for existing ICRs receive a month-to-month extension while they undergo review.

Agency: DOL–ETA.

Title of Collection: Student Experience Assessment of Job Corps Centers.

OMB Control Number: 1205–0NEW.

Affected Public: Individuals or Households.

Total Estimated Number of Respondents: 29,934.

Total Estimated Number of Responses: 119,736.

Total Estimated Annual Time Burden: 39,513 hours.

Total Estimated Annual Other Costs Burden: $0.

Authority: 44 U.S.C. 3507(a)(1)(D).

Dated: May 15, 2020.

Anthony May,

Acting Departmental Clearance Officer.

[FR Doc. 2020–11083 Filed 5–21–20; 8:45 am]

BILLING CODE 4510–FT–P

NATIONAL SCIENCE FOUNDATION

Advisory Committee for Social, Behavioral and Economic Sciences; Notice of Meeting

In accordance with the Federal Advisory Committee Act (Pub. L. 92–463, as amended), the National Science Foundation (NSF) announces the following meeting:

Name and Committee Code: Advisory Committee for Social, Behavioral and Economic Sciences (#1171) (Virtual).

Date and Time: June 4, 2020; 11:00 a.m.–4:20 p.m. (EDT).

Place: NSF, 2415 Eisenhower Avenue, Alexandria, VA 22314. Virtual AC Meeting via Zoom. Advance registration is required: *https:/nsf.zoomgov.com/webinar/register/WN_7z9g-vrtR_yti-mV4xUdsw.*

View Real-Time Captions During the Meeting: https://www.captionedtext.com/client/event.aspx?EventID=4439649&CustomerID=321. Enter confirmation number, 4439649.

Type of Meeting: Open.

Contact Person: Dr. Deborah Olster, Office of the Assistant Director, Directorate for Social, Behavioral and Economic Sciences; National Science Foundation, 2415 Eisenhower Avenue, Alexandria, VA 22314; Telephone: (703) 292–8700.

Summary of Minutes: Will be available on SBE advisory committee website at: *https://www.nsf.gov/sbe/advisory.jsp.*

Purpose of Meeting: To provide advice and recommendations to the National Science Foundation on major goals and policies pertaining to Social, Behavioral and Economic Sciences Directorate (SBE) programs and activities.

Agenda

- Welcome, Introductions, Approval of Previous AC Meeting Summary
- SBE Update
- Build and Broaden: Enabling New Social, Behavioral and Economic Science Collaborations With Minority-Serving Institutions
- Strengthening American Infrastructure
- Societal Experts Action Network
- Science and Engineering Indicators: Highlight
- National Institutes of Health Activities Related to COVID–19
- Exploring Collaboration Between SBE and the Directorate for Computer & Information Science & Engineering (CISE) (Jointly With CISE AC)
- SBE AC Member Research Presentations
- Farewell to and Reflections From Outgoing SBE AC Chair
- Wrap-Up, Assignments, Closing Remarks

Dated: May 18, 2020.

Crystal Robinson,

Committee Management Officer.

[FR Doc. 2020–11014 Filed 5–21–20; 8:45 am]

BILLING CODE 7555–01–P

NUCLEAR REGULATORY COMMISSION

674th Meeting of the Advisory Committee on Reactor Safeguards (ACRS)

In accordance with the purposes of Sections 29 and 182b of the Atomic Energy Act (42 U.S.C. 2039, 2232b), the Advisory Committee on Reactor Safeguards (ACRS) will hold meetings on June 3–5, 2020. As part of the coordinated government response to combat COVID–19, the Committee will conduct virtual meetings. The public will be able to participate in any open sessions via 1–866–822–3032, pass code 8272423#.

Wednesday, June 3, 2020

9:30 a.m.–9:35 a.m.: Opening Remarks by the ACRS Chairman (Open)—The ACRS Chairman will make opening remarks regarding the conduct of the meeting.

9:35 a.m.–11:00 a.m.: Regulatory Guide 1.236, ''Pressurized Water Reactor Control Rod Ejection and Boiling Water Reactor Control Rod Drop'' (Open)—The Committee will have presentations and discussion with the NRC staff regarding the subject guide.

11:15 a.m.–12:45 p.m.: RG 1.187, Guidance for Implementation of 10 CFR 50.59, ''Changes, Tests, and Experiments,'' regarding digital instrumentation and control upgrades (Open)—The Committee will have presentations and discussion with the NRC staff regarding the subject guide.

1:15 p.m.–5:45 p.m.: NuScale Area of Focus: Boron Redistribution (Open/Closed)—The Committee will have presentations and discussion with NuScale and the NRC staff regarding subject topic. [*Note:* A portion of this session may be closed in order to discuss and protect information designated as proprietary, pursuant to 5 U.S.C. 552b(c)(4)].

5:45 p.m.–7:00 p.m.: Preparation of ACRS Reports (Open/Closed)—The Committee will continue its discussion of proposed ACRS reports. [*Note:* A portion of this session may be closed in order to discuss and protect information designated as proprietary, pursuant to 5 U.S.C. 552b(c)(4)].

Thursday, June 4, 2020

9:30 a.m.–1:30 p.m.: NuScale Area of Focus: Boron Redistribution (Open/Closed)—The Committee will have presentations and discussion with NuScale and the NRC staff regarding subject topic. [*Note:* A portion of this session may be closed in order to discuss and protect information designated as proprietary, pursuant to 5 U.S.C. 552b(c)(4)].

2:30 p.m.–6:00 p.m.: Preparation of ACRS Reports (Open/Closed)—The Committee will continue its discussion of proposed ACRS reports. [*Note:* A portion of this session may be closed in order to discuss and protect information

designated as proprietary, pursuant to 5 U.S.C. 552b(c)(4)].

Friday, June 5, 2020

9:30 a.m.–11:30 a.m.: Future ACRS Activities/Report of the Planning and Procedures Subcommittee and Reconciliation of ACRS Comments and Recommendations (Open/Closed)—The Committee will hear discussion of the recommendations of the Planning and Procedures Subcommittee regarding items proposed for consideration by the Full Committee during future ACRS meetings. [*Note:* A portion of this meeting may be closed pursuant to 5 U.S.C. 552b(c)(2) and (6) to discuss organizational and personnel matters that relate solely to internal personnel rules and practices of the ACRS, and information the release of which would constitute a clearly unwarranted invasion of personal privacy.] [*Note:* A portion of this session may be closed in order to discuss and protect information designated as proprietary, pursuant to 5 U.S.C. 552b(c)(4)].

11:30 a.m.–6:00 p.m.: Preparation of ACRS Reports (Open/Closed)—The Committee will continue its discussion of proposed ACRS reports. [*Note:* A portion of this session may be closed in order to discuss and protect information designated as proprietary, pursuant to 5 U.S.C 552b(c)(4)]. [*Note:* Portions of this meeting may be closed pursuant to 5 U.S.C. 552b(c)(2) and (6) to discuss organizational and personnel matters that relate solely to internal personnel rules and practices of the ACRS, and information the release of which would constitute a clearly unwarranted invasion of personal privacy.]

Procedures for the conduct of and participation in ACRS meetings were published in the **Federal Register** on June 13, 2019 (84 FR 27662). In accordance with those procedures, oral or written views may be presented by members of the public, including representatives of the nuclear industry. Persons desiring to make oral statements should notify Quynh Nguyen, Cognizant ACRS Staff and the Designated Federal Official (Telephone: 301–415–5844, Email: *Quynh.Nguyen@nrc.gov*), 5 days before the meeting, if possible, so that appropriate arrangements can be made to allow necessary time during the meeting for such statements. In view of the possibility that the schedule for ACRS meetings may be adjusted by the Chairman as necessary to facilitate the conduct of the meeting, persons planning to attend should check with the Cognizant ACRS staff if such rescheduling would result in major inconvenience.

An electronic copy of each presentation should be emailed to the Cognizant ACRS Staff at least one day before meeting.

In accordance with Subsection 10(d) of Public Law 92–463 and 5 U.S.C. 552b(c), certain portions of this meeting may be closed, as specifically noted above. Use of still, motion picture, and television cameras during the meeting may be limited to selected portions of the meeting as determined by the Chairman. Electronic recordings will be permitted only during the open portions of the meeting.

ACRS meeting agendas, meeting transcripts, and letter reports are available through the NRC Public Document Room (PDR) at *pdr.resource@nrc.gov,* or by calling the PDR at 1–800–397–4209, or from the Publicly Available Records System component of NRC's Agencywide Documents Access and Management System (ADAMS) which is accessible from the NRC website at *https://www.nrc.gov/reading-rm/adams.html* or *https://www.nrc.gov/reading-rm/doc-collections/#ACRS/.*

Video teleconferencing service is available for observing open sessions of ACRS meetings. Those wishing to use this service should contact Thomas Dashiell, ACRS Audio Visual Technician (301–415–7907), between 7:30 a.m. and 3:45 p.m. (Eastern Time), at least 10 days before the meeting to ensure the availability of this service. Individuals or organizations requesting this service will be responsible for telephone line charges and for providing the equipment and facilities that they use to establish the video teleconferencing link. The availability of video teleconferencing services is not guaranteed.

Note: This notice is late due to the COVID–19 public health emergency and current health precautions which required the Committee to prepare for the meeting to be held remotely.

Dated: May 19, 2020.

Russell E. Chazell,

Federal Advisory Committee Management Officer, Office of the Secretary.

[FR Doc. 2020–11092 Filed 5–21–20; 8:45 am]

BILLING CODE 7590–01–P

POSTAL REGULATORY COMMISSION

[Docket No. CP2020–141; Order No. 5514]

Inbound Competitive Multi-Service Agreements With Foreign Postal Operators

AGENCY: Postal Regulatory Commission.

ACTION: Notice.

SUMMARY: The Commission is acknowledging a recent filing by the Postal Service that it has entered into the Inbound Competitive Multi-Service Agreement with Foreign Postal Operators (FPOs). This notice informs the public of the filing, invites public comment, and takes other administrative steps.

DATES: *Comments are due:* June 1, 2020.

ADDRESSES: Submit comments electronically via the Commission's Filing Online system at *http://www.prc.gov.* Those who cannot submit comments electronically should contact the person identified in the **FOR FURTHER INFORMATION CONTACT** section by telephone for advice on filing alternatives.

FOR FURTHER INFORMATION CONTACT: David A. Trissell, General Counsel, at 202–789–6820.

SUPPLEMENTARY INFORMATION:

Table of Contents

I. Introduction
II. Commission Action
III. Ordering Paragraphs

I. Introduction

In accord On May 15, 2020, the Postal Service filed a notice with the Commission pursuant to 39 CFR 3035.105 and Order No. 546,[1] giving notice that it has entered into the Inbound Competitive Multi-Service Agreement with Foreign Postal Operators (FPOs). The Notice concerns the inbound portions of the competitive multi-product Interconnect Remuneration Agreement USPS and Specified Postal Operators (IRA–USPS Agreement). The Postal Service seeks to include the IRA–USPS Agreement within the Inbound Competitive Multi-Service Agreement with Foreign Postal Operators 1 (MC2010–34) product. Notice at 1. The IRA–USPS Agreement contains rates for inbound competitive parcels, packets, and registered mail. *Id.* at 5–6.

The Postal Service asserts that the IRA–USPS Agreement ''is functionally equivalent to the baseline agreement filed in Docket No. MC2010–34 because the terms of this agreement are similar in scope and purpose to the terms of the TNT Post Agreement.'' *Id.* at 3. Concurrent with the Notice, the Postal Service filed supporting financial

[1] Notice of United States Postal Service of Filing Functionally Equivalent Inbound Competitive Multi-Service Agreement with Foreign Postal Operators, May 15, 2020 (Notice). Docket Nos. MC2010–34 and CP2010–95, Order Adding Inbound Competitive Multi-Service Agreements with Foreign Postal Service Operators 1 to the Competitive Product List and Approving Included Agreement, September 29, 2010 (Order No. 546).

documentation and the following documents:

- Attachment 1—an application for non-public treatment;
- Attachment 2—the IRA–USPS Agreement;
- Attachment 3—Governors' Decision No. 19–1;
- Attachment 4—a certified statement required by 39 CFR 3035.105(c)(2).

Id. at 4–5.

The Postal Service intends for the IRA–USPS Agreement to become effective July 1, 2020, and continue indefinitely. *Id.* at 5. The Postal Service expects that additional FPOs will become party to the agreement and states that it will update this docket should additional FPOs accede to the IRA–USPS Agreement. *Id.*

The Postal Service states it intends for these rates to be in effect on July 1, 2020. *Id.* at 1. The Postal Service states that, beginning with the rates that will be in effect in 2021, any party to the IRA–USPS Agreement can change its delivery rates by communicating the new rates to the International Post Corporation by June 1 of the year preceding the rate's application. *Id.* at 6. Additionally, the Postal Service notes that the IRA–USPS Agreement allows parties to self-declare rates within defined parameters. *Id.*

The Postal Service states that the IRA–USPS Agreement is in compliance with 39 U.S.C. 3633 and is functionally equivalent to the inbound competitive portions of the baseline agreement which was included in the Inbound Competitive Multi-Service Agreements with Foreign Postal Operators 1 product (MC2010–34). *Id.* at 10. For these reasons, the Postal Service avers that the IRA–USPS product should be added to the Inbound Competitive Multi-Service Agreements with Foreign Postal Operators 1 product. *Id.*

II. Commission Action

The Commission establishes Docket No. CP2020–141 to consider the Notice. Interested persons may submit comments on whether the IRA–USPS Agreement is consistent with 39 U.S.C. 3633 and 39 CFR 3035.105 and whether it is functionally equivalent to the baseline agreement included in the Inbound Competitive Multi-Service Agreements with Foreign Postal Operators 1 product (MC2010–34). Comments are due by June 1, 2020.

The Request and related filings are available on the Commission's website (*http://www.prc.gov*). The Commission encourages interested persons to review the Notice for further details.

The Commission appoints Natalie R. Ward to serve as Public Representative in this proceeding.

III. Ordering Paragraphs

It is ordered:

1. The Commission establishes Docket No. CP2020–141 for consideration of the matters raised by the Notice of United States Postal Service of Filing Functionally Equivalent Inbound Competitive Multi-Service Agreement with Foreign Postal Operators, May 15, 2020.

2. Pursuant to 39 U.S.C. 505, Natalie R. Ward is appointed to serve as an officer of the Commission (Public Representative) to represent the interests of the general public in this proceeding.

3. Comments by interested persons are due by June 1, 2020.

4. The Secretary shall arrange for publication of this order in the **Federal Register**.

By the Commission.

Erica A. Barker,

Secretary.

[FR Doc. 2020–11022 Filed 5–21–20; 8:45 am]

BILLING CODE 7710–FW–P

POSTAL SERVICE

Board of Governors; Sunshine Act Meeting

DATES AND TIMES: Thursday, May 28, 2020, at 9 a.m.

PLACE: Washington, DC.

STATUS: Closed.

MATTERS TO BE CONSIDERED:

Thursday, May 28, 2020, at 9 a.m.

1. Strategic Issues.
2. Financial and Operational Matters.
3. Personnel Matters.
4. Administrative Issues.

GENERAL COUNSEL CERTIFICATION: The General Counsel of the United States Postal Service has certified that the meeting may be closed under the Government in the Sunshine Act.

CONTACT PERSON FOR MORE INFORMATION: Michael J. Elston, Secretary of the Board of Governors, U.S. Postal Service, 475 L'Enfant Plaza SW, Washington, DC 20260–1000. Telephone: (202) 268–4800.

Michael J. Elston,

Secretary.

[FR Doc. 2020–11227 Filed 5–20–20; 4:15 pm]

BILLING CODE 7710–12–P

RAILROAD RETIREMENT BOARD

Agency Forms Submitted for OMB Review, Request for Comments

SUMMARY: In accordance with the Paperwork Reduction Act of 1995, the Railroad Retirement Board (RRB) is forwarding 4 Information Collection Requests (ICR) to the Office of Information and Regulatory Affairs (OIRA), Office of Management and Budget (OMB). Our ICR describes the information we seek to collect from the public. Review and approval by OIRA ensures that we impose appropriate paperwork burdens.

The RRB invites comments on the proposed collections of information to determine (1) the practical utility of the collections; (2) the accuracy of the estimated burden of the collections; (3) ways to enhance the quality, utility, and clarity of the information that is the subject of collection; and (4) ways to minimize the burden of collections on respondents, including the use of automated collection techniques or other forms of information technology. Comments to the RRB or OIRA must contain the OMB control number of the ICR. For proper consideration of your comments, it is best if the RRB and OIRA receive them within 30 days of the publication date.

1. Title and purpose of information collection: Placement Service; OMB 3220–0057.

Section 12(i) of the Railroad Unemployment Insurance Act (RUIA) (45 U.S.C. 362), authorizes the RRB to establish, maintain, and operate free employment offices to provide claimants for unemployment benefits with job placement opportunities. Section 704(d) of the Regional Railroad Reorganization Act of 1973, as amended, and as extended by the Consolidated Omnibus Budget Reconciliation Act of 1985, required the RRB to maintain and distribute a list of railroad job vacancies, by class and craft, based on information furnished by rail carriers to the RRB. Although the requirement under the law expired effective August 13, 1987, the RRB has continued to obtain this information in keeping with its employment service responsibilities under Section 12(k) of the RUIA. Application procedures for the job placement program are prescribed in 20 CFR 325. The procedures pertaining to the RRB's obtaining and distributing job vacancy reports furnished by rail carriers are described in 20 CFR 346.1.

The RRB currently utilizes four forms to obtain information needed to carry out its job placement responsibilities.

Form ES–2, *Central Register Notification,* is used by the RRB to obtain information needed to update a computerized central register of separated and furloughed railroad employees available for employment in the railroad industry. Forms ES–21, *Referral to State Employment Service,* and ES–21c, *Report of State Employment Service Office,* are used by the RRB to provide placement assistance for unemployed railroad employees through arrangements with State Employment Service offices. Form UI–35, Field Office Record of Claimant Interview, is used primarily by the RRB to conduct in-person interviews of claimants for unemployment benefits.

Completion of these forms is required to obtain or maintain a benefit. In addition, the RRB also collects Railroad Job Vacancies information received voluntarily from railroad employers.

Previous Requests for Comments: The RRB has already published the initial 60-day notice (85 FR 8895 on February 18, 2020) required by 44 U.S.C. 3506(c)(2). That request elicited no comments.

Information Collection Request (ICR)

Title: Placement Service.

OMB Control Number: 3220–0057.

Form(s) submitted: ES–2, ES–21, ES–21c, UI–35 and Job Vacancies Report.

Type of request: Revision of a currently approved collection.

Affected public: Private Sector, Businesses or other for-profits; Individuals or Households; State, Local, and Tribal Governments.

Abstract: Under the RUIA, the Railroad Retirement Board provides job placement assistance for unemployed railroad workers. The collection obtains information from job applicants, railroad employers, and State Employment Service offices for use in placement, for providing referrals for job openings, reports of referral results and for verifying and monitoring claimant eligibility.

Changes proposed: The RRB no longer offers the Central Register as a basic employment service as of April 2017 and propose to obsolete Form ES–2. The RRB proposes no changes to Forms ES–21 and ES–21c and proposes minor changes to Form UI–35 to remove all reference to the obsolete Central Register and renumber accordingly.

The burden estimate for the ICR is as follows:

Form No.	Annual responses	Time (minutes)	Burden (hours)
ES–21	80	1.00	1
ES–21c	25	2.00	1
UI–35 in person	6,300	7.00	735
UI–35 by mail	700	11.00	128
Job Vacancies	470	10.00	78
Total	7,575		943

2. Title and Purpose of information collection: Certification Regarding Rights to Unemployment Benefits; OMB 3220–0079.

Under Section 4 of the Railroad Unemployment Insurance Act (RUIA) (45 U.S.C. 354), an employee who leaves work voluntarily is disqualified for unemployment benefits unless the employee left work for good cause and is not qualified for unemployment benefits under any other law. RRB Form UI–45, Claimant's Statement—Voluntary Leaving of Work, is used by the RRB to obtain the claimant's statement when the claimant, the claimant's employer, or another source indicates that the claimant has voluntarily left work.

Completion of Form UI–45 is required to obtain or retain benefits. One response is received from each respondent.

Previous Requests for Comments: The RRB has already published the initial 60-day notice (85 FR 8895 on February 18, 2020) required by 44 U.S.C. 3506(c)(2). That request elicited no comments.

Information Collection Request (ICR)

Title: Certification Regarding Rights to Unemployment Benefits.

OMB Control Number: 3220–0079.

Form(s) submitted: UI–45.

Type of request: Extension without change of a currently approved collection.

Affected public: Individuals or Households.

Abstract: In administering the disqualification for the voluntary leaving of work provision of Section 4 of the Railroad Unemployment Insurance Act, the Railroad Retirement Board investigates an unemployment claim that indicates the claimant left voluntarily. The certification obtains information needed to determine if the leaving was for good cause.

Changes proposed: The RRB proposes no changes to Form UI–45.

The burden estimate for the ICR is as follows:

Form No.	Annual responses	Time (minutes)	Burden (hours)
UI–45	200	15	50

3. Title and purpose of information collection: Self-Employment and Substantial Service Questionnaire; OMB 3220–0138.

Section 2 of the Railroad Retirement Act (RRA) (45 U.S.C. 231a) provides for payment of annuities to qualified employees and their spouses. In order to receive an age and service annuity, Section 2(e)(3) states that an applicant must stop all railroad work and give up any rights to return to such work. However, applicants are not required to stop nonrailroad work or self-employment.

The RRB considers some work claimed as ''self-employment'' to actually be employment for an employer. Whether the RRB classifies a particular activity as self-employment or as work for an employer depends upon the circumstances of each case. These circumstances are prescribed in 20 CFR 216.

Under the 1988 amendments to the RRA, an applicant is no longer required to stop work for a ''Last Pre-Retirement

Nonrailroad Employer'' (LPE). However, Section 2(f)(6) of the RRA requires that a portion of the employee's Tier II benefit and supplemental annuity be deducted for earnings from the ''LPE.''

The ''LPE'' is defined as the last person, company, or institution with whom the employee or spouse applicant was employed concurrently with, or after, the applicant's last railroad employment and before their annuity beginning date. If a spouse never worked for a railroad, the LPE is the last person for whom he or she worked.

The RRB utilizes Form AA–4, *Self-Employment and Substantial Service Questionnaire,* to obtain information needed to determine if the work the applicant claims is self-employment is really self-employment or work for an LPE or railroad service. If the work is self-employment, the questionnaire identifies any month in which the applicant did not perform substantial service.

Completion is voluntary. However, failure to complete the form could result in the nonpayment of benefits. One response is requested of each respondent.

Previous Requests for Comments: The RRB has already published the initial 60-day notice (85 FR 8896 on February 18, 2020) required by 44 U.S.C. 3506(c)(2). That request elicited no comments.

Information Collection Request (ICR)

Title: Self-Employment and Substantial Service Questionnaire.

OMB Control Number: 3220–0138.

Form(s) submitted: AA–4.

Type of request: Revision of a currently approved collection.

Affected public: Individuals or Households.

Abstract: Section 2 of the Railroad Retirement Act (RRA) provides for payment of annuities to qualified employees and their spouses. Work for a Last Pre-Retirement Nonrailroad Employer (LPE), and work in self-employment affect payment in different ways. This collection obtains information to determine whether claimed self-employment is really self-employment, and not work for a railroad or LPE.

Changes proposed: The RRB proposes minor non-burden impacting changes to the form AA–4.

The burden estimate for the ICR is as follows:

Form No.	Annual responses	Time (minutes)	Burden (hours)
AA–4 (With assistance)	570	40	380
AA–4 (Without assistance)	30	70	35
Total	600	.....	415

4. Title and purpose of information collection: Withholding Certificate for Railroad Retirement Monthly Annuity Payments; OMB 3220–0149.

The Internal Revenue Code requires that all payers of tax liable private pensions to U.S. citizens or residents: (1) Notify each recipient at least concurrent with initial withholding that the payer is, in fact, withholding benefits for tax liability and that the recipient has the option of electing not to have the payer withhold, or to withhold at a specific rate; (2) withhold benefits for tax purposes (in the absence of the recipient's election not to withhold benefits); and (3) notify all beneficiaries, at least annually, that they have the option to change their withholding status or elect not to have benefits withheld.

The RRB provides Form RRB–W4P, Withholding Certificate for Railroad Retirement Payments, to its annuitants to exercise their withholding options.

Completion of the form is required to obtain or retain a benefit. One response is requested of each respondent.

Previous Requests for Comments: The RRB has already published the initial 60-day notice (85 FR 8896 on February 18, 2020) required by 44 U.S.C. 3506(c)(2). That request elicited no comments.

Information Collection Request (ICR)

Title: Withholding Certificate for Railroad Retirement Monthly Annuity Payments.

OMB Control Number: 3220–0149.

Form(s) submitted: RRB W–4P.

Type of request: Extension without change of a currently approved collection.

Affected public: Individuals or Households.

Abstract: Under Public Law 98–76, railroad retirement beneficiaries' Tier II, dual vested and supplemental benefits are subject to income tax under private pension rules. Under Public Law 99–514, the non-social security equivalent benefit portion of Tier I is also taxable under private pension rules. The collection obtains the information needed by the Railroad Retirement Board to implement the income tax withholding provisions.

Changes proposed: The RRB proposes no changes to Form RRB W–4P.

The burden estimate for the ICR is as follows:

Estimated annual number of respondents: 25,000.

Total annual responses: 25,000.

Total annual reporting hours: 1.

5. Title and purpose of information collection: Designation of Contact Officials; 3220–0200.

Coordination between railroad employers and the RRB is essential to properly administer the payment of benefits under the Railroad Retirement Act (RRA) and the Railroad Unemployment Insurance Act (RUIA). In order to enhance timely coordination activity, the RRB utilizes Form G–117A, Designation of Contact Officials. Form G–117A is used by railroad employers to designate employees who are to act as point of contact with the RRB on a variety of RRA and RUIA-related matters.

Completion is voluntary. One response is requested from each respondent.

Previous Requests for Comments: The RRB has already published the initial 60-day notice (85 FR 8896 on February 18, 2020) required by 44 U.S.C. 3506(c)(2). That request elicited no comments.

Information Collection Request (ICR)

Title: Designation of Contact Officials.

OMB Control Number: 3220–0200.

Form(s) submitted: G–117A.

Type of request: Extension without change of a currently approved collection.

Affected public: Private Sector; Businesses or other for profits.

Abstract: The Railroad Retirement Board (RRB) requests that railroad employers designate employees to act as liaison with the RRB on a variety of Railroad Retirement Act and Railroad Unemployment Insurance Act matters.

Changes proposed: The RRB proposes no revisions to Form G–117A.

The burden estimate for the ICR is as follows:

Form No.	Annual responses	Time (minutes)	Burden (hours)
G–117A	100	15	25

Additional Information or Comments: Copies of the forms and supporting documents can be obtained from Kennisha Tucker at (312) 469–2591 or *Kennisha.Tucker@rrb.gov.* Comments regarding the information collection should be addressed to Brian Foster, Railroad Retirement Board, 844 North Rush Street, Chicago, Illinois 60611–1275 or *Brian.Foster@rrb.gov.*

Written comments and recommendations for the proposed information collection should be sent within 30 days of publication of this notice to *www.reginfo.gov/public/do/PRAMain.* Find this particular information collection by selecting ''Currently under 30-day Review—Open for Public Comments'' or by using the search function.

Brian Foster,

Clearance Officer.

[FR Doc. 2020–11019 Filed 5–21–20; 8:45 am]

BILLING CODE 7905–01–P

SECURITIES AND EXCHANGE COMMISSION

[Release No. 34–88906; File No. SR–OCC–2020–803]

Self-Regulatory Organizations; The Options Clearing Corporation; Notice of Filing of Advance Notice Concerning Changes to The Options Clearing Corporation's Non-Bank Liquidity Facility Program as Part of Its Overall Liquidity Plan

May 19, 2020.

Pursuant to Section 806(e)(1) of Title VIII of the Dodd-Frank Wall Street Reform and Consumer Protection Act, entitled Payment, Clearing and Settlement Supervision Act of 2010 (''Clearing Supervision Act'') [1] and Rule 19b–4(n)(1)(i) [2] under the Securities Exchange Act of 1934 (''Exchange Act''),[3] notice is hereby given that on April 15, 2020, the Options Clearing Corporation (''OCC'') filed with the Securities and Exchange Commission (''Commission'') an advance notice as described in Items I, II and III below, which Items have been prepared by OCC. The Commission is publishing this notice to solicit comments on the advance notice from interested persons.

I. Clearing Agency's Statement of the Terms of Substance of the Advance Notice

This advance notice is filed by The Options Clearing Corporation (''OCC'') in connection with a proposed change to its operations to: (i) Set the aggregate commitment amount that it may seek under its program for accessing additional committed sources of liquidity that do not increase the concentration of OCC's counterparty exposure (''Non-Bank Liquidity Facility'') as part of OCC's overall liquidity plan and (ii) allow more flexibility for OCC to negotiate the Non-Bank Liquidity Facility's commitment term. All terms with initial capitalization that are not otherwise defined herein have the same meaning as set forth in the OCC By-Laws and Rules.[4]

II. Clearing Agency's Statement of the Purpose of, and Statutory Basis for, the Advance Notice

In its filing with the Commission, OCC included statements concerning the purpose of and basis for the advance notice and discussed any comments it received on the advance notice. The text of these statements may be examined at the places specified in Item IV below. OCC has prepared summaries, set forth in sections A and B below, of the most significant aspects of these statements.

(A) Clearing Agency's Statement on Comments on the Advance Notice Received From Members, Participants or Others

Written comments were not and are not intended to be solicited with respect to the proposed change and none have been received.

(B) Advance Notices Filed Pursuant to Section 806(e) of the Payment, Clearing, and Settlement Supervision Act

Description of Change

This advance notice concerns a change to OCC's operations to: (i) Set the aggregate commitment amount that it may seek under the Non-Bank Liquidity Facility to up to $1 billion as part of OCC's overall liquidity plan and (ii) allow more flexibility for OCC to negotiate the Non-Bank Liquidity Facility's commitment term.

Background

OCC's current liquidity plan provides it with access to a diverse set of funding sources, including banks (*i.e.,* OCC's syndicated credit facility [5] and a master repurchase agreement with a bank counterparty (''Repo Liquidity Facility'') [6]), the Non-Bank Liquidity Facility program,[7] and Clearing Members' Cash Clearing Fund Requirement.[8] The Non-Bank Liquidity Facility program reduces the concentration of OCC's counterparty exposure with respect to its overall liquidity plan by diversifying its lender base among banks and non-bank, non-Clearing Member institutional investors, such as pension funds or insurance companies.

The currently approved Non-Bank Liquidity Facility program is comprised of two parts: A Master Repurchase Agreement (''MRA'') and confirmations with one or more institutional investors, which contain certain individualized terms and conditions of transactions executed between OCC, the institutional investors and their agents. The MRA is structured like a typical repurchase arrangement in which the buyer (*i.e.,* the institutional investor) would purchase from OCC, from time to time, United States government securities (''Eligible Securities'').[9] OCC, as the seller, would transfer Eligible Securities to the buyer in exchange for a payment by the buyer to OCC in immediately available funds (''Purchase Price''). The buyer would

[1] 12 U.S.C. 5465(e)(1).

[2] 17 CFR 240.19b–4(n)(1)(i).

[3] 15 U.S.C. 78a *et seq.*

[4] OCC's By-Laws and Rules can be found on OCC's public website: *http://optionsclearing.com/about/publications/bylaws.jsp.*

[5] *See* Exchange Act Release No. 85924 (May 23, 2019), 84 FR 25089 (May 30, 2019) (SR–OCC–2019–803).

[6] *See* Exchange Act Release No. 88317 (March 4, 2020), 85 FR 13681 (March 9, 2020) (SR–OCC–2020–801).

[7] *See* Exchange Act Release No. 73979 (Jan. 2, 2015), 80 FR 1062 (Jan. 8, 2015) (SR–OCC–2014–809) (''Notice of No Objection to 2014 Advance Notice''); Exchange Act Release No. 76821 (Jan. 4, 2016), 81 FR 3208 (Jan. 20, 2016) (SR–2015–805) (''Notice of No Objection to 2015 Advance Notice'').

[8] *See* OCC Rule 1002.

[9] OCC would use U.S. government securities that are included in Clearing Fund contributions by Clearing Members and margin deposits of any Clearing Member that has been suspended by OCC for the repurchase arrangements. OCC Rule 1006(f) and OCC Rule 1104(b) authorize OCC to obtain funds from third parties through securities repurchases using these sources. The officers who may exercise this authority include the Executive Chairman, Chief Executive Officer, and Chief Operating Officer.

simultaneously agree to transfer the purchased securities back to OCC at a specified later date (''Repurchase Date'') or on OCC's demand against the transfer of funds by OCC to the buyer in an amount equal to the outstanding Purchase Price plus the accrued and unpaid price differential (together, ''Repurchase Price''), which is the interest component of the Repurchase Price.

The confirmations establish tailored provisions of repurchase transactions permitted under the Non-Bank Liquidity Facility that are designed to reduce concentration risk and to promote certainty of funding and operational effectiveness based on the specific needs of a party. For example, OCC would only enter into confirmations with an institutional investor that is not a Clearing Member or affiliated bank, such as pension funds or insurance companies, in order to allow OCC to access stable and reliable sources of funding without increasing the concentration of its exposure to counterparties that are affiliated banks, broker/dealers, or futures commission merchants. In addition, any such institutional investor is obligated to enter repurchase transactions even if OCC experiences a material adverse change,[10] funds must be made available to OCC within 60 minutes of OCC's delivering eligible securities, and the institutional investor is not permitted to rehypothecate purchased securities.[11] Additionally, the confirmations set forth the term and maximum dollar amounts of the transaction permitted under the MRA.[12]

In 2019, the Non-Bank Liquidity Facility counterparty decided not to renew its commitments, and two confirmations totaling $1 billion (''Prior Confirmations'') expired on January 2, 2020 and January 6, 2020. In anticipation of the expiration of the Prior Confirmations and to prevent a drop in OCC's overall liquidity resources, OCC (i) exercised an accordion feature under its syndicated credit facility to increase the amount from $2 billion to $2.5 billion, and (ii) exercised authority under OCC Rule 1002 to temporarily increase the size of the Cash Clearing Fund Requirement from $3 billion to $3.5 billion.[13] After obtaining regulatory approval, OCC also executed the Repo Liquidity Facility with a bank counterparty for $500 million.[14]

Since learning that the Prior Commitments would not be renewed, OCC has also been working with a lending agent to identify interested institutional investors to secure replacement Commitments for the $1 billion in Prior Confirmations. The purpose of this filing is to modify certain aspects of the Non-Bank Liquidity Facility program to give OCC the flexibly to seek confirmations up to $1 billion in the aggregate with such durations as approved by its Board of Directors (''Board'').

Aggregate Commitment Amount OCC May Seek Under the Confirmations

OCC is proposing to adjust the aggregate amount it can seek through the Non-Bank Liquidity Facility program to an amount up to $1 billion, as opposed to no less than $1 billion and no greater than $1.5 billion—allowing OCC the ability to seek commitments even if the aggregate commitment level falls below $1 billon. The Non-Bank Liquidity Facility program, as initially proposed, authorized commitments of $1 billion in the aggregate.[15] In 2015, OCC filed an advance notice to modify the Non-Bank Liquidity Facility program to allow OCC to seek aggregate commitments of no less than $1 billion and no greater than $1.5 billion (the ''2015 Advance Notice'').[16] The increase to the permissible range was made as part of OCC's plan to transition from a single $1 billion confirmation to two confirmations of $500 million with staggered expiration dates.[17] While the current Non-Bank Liquidity Facility program gives OCC discretion to seek aggregate commitments of no more than $1.5 billion, OCC's Board has consistently authorized OCC to seek commitments up to an aggregate amount of $1 billion since 2016. OCC is proposing to modify the Non-Bank Liquidity Facility program to align the program's terms with the commitment level approved by the Board.

OCC's ability to secure or renew commitments under the Non-Bank Liquidity Facility is subject to market conditions, among other factors outside of OCC's control. As evidenced by the recent expiration of the Prior Confirmations, a counterparty's decision not to renew its commitment under the facility may cause the aggregate commitment amount to fall below $1 billion. As part of OCC's overall liquidity plan, however, OCC maintains access to a diverse set of funding sources in addition to the Non-Bank Liquidity Facility. To address the expiration of a Non-Bank Liquidity Facility commitment, OCC would have several options, including (i) execution of one of more commitments under the Non-Bank Liquidity Facility up to the $1 billion aggregate commitment amount proposed, (ii) exercising the accordion feature under the syndicated credit facility, (iii) exercising authority under OCC Rule 1002 to temporarily increase the Cash Clearing Fund Requirement, and (iv) filing an advance notice to execute a master repurchase agreement with other counterparties, similar to the Repo Liquidity Facility. Allowing OCC to seek one or more Non-Bank Liquidity Facility commitments that, in the aggregate, are less than $1.0 billion would allow OCC the flexibility to adjust the mix of liquidity resources based on market conditions, availability and shifting liquidity needs. If OCC is unable to secure commitments to replace existing confirmations, OCC would reallocate shortfalls to other liquidity resources to prevent a drop in total liquidity resources.

Without this change, OCC arguably could not execute individual commitments that result in an aggregated commitment of less than $1

[10] When included in a contract, a ''material adverse change'' is typically defined as a change that would have a materially adverse effect on the business or financial condition of a company.

[11] *See* Notice of No Objection to 2014 Advance Notice, 80 FR at 1064.

[12] Because the arrangements between OCC and the individual buyers have not been fully negotiated, OCC has summarized the indicative terms in Exhibit 3a to File No. SR–OCC–2020–803. Exhibit 3a shows the terms indicated in prior advance notices, as modified by the proposed changes in this advance notice. The exhibit is a non-public document for which OCC has submitted a request for confidential treatment to the Commission.

[13] After reviewing that temporary increase in accordance with Rule 1002, the Risk Committee determined to maintain the increase, which was already contemplated as part of a proposed rule change that OCC has since filed with the Commission. *See* File No. SR–OCC–2020–003. The proposed rule change would, among other things, modify Rule 1002 to allow OCC to periodically set the Clearing Fund Cash Requirement based on an analysis of OCC's projected liquidity demands under a variety of stressed scenarios. Subject to regulatory approval of that filing, the Risk Committee would initially reset the Clearing Fund Cash Requirement to $3.5 billion based on an analysis of stress test results demonstrating that this amount, in combination with OCC's current and anticipated committed liquidity facilities—a $2 billion syndicated credit facility and $1 billion in other committed liquidity facilities (*i.e.,* the Repo Liquidity Facility and/or the Non-Bank Liquidity Facility)—would be sufficient to cover OCC's liquidity risk tolerance of 1-in-50 year statistical market event at a 99.5% level over a two-year look back period.

[14] After the Repo Liquidity Facility became effective, OCC terminated the $500 million accordion on the syndicated credit facility.

[15] Notice of No Objection to 2014 Advance Notice, 80 FR at 1064 & n.11.

[16] Notice of No Objection to 2015 Advance Notice, 81 FR at 3208.

[17] *See id.* at 3209 (discussing the extension of the existing confirmation and the execution of a second confirmation).

billion at the time executed, making it difficult or impossible for OCC to negotiate individual commitments, each less than $1 billion, with multiple counterparties that may be proceeding on different timelines. In addition, allowing OCC to execute confirmations at different times would have the benefit of staggering expiration dates—to the extent such confirmations are for fixed terms—mitigating the risk that overlapping expirations may cause a drop in OCC's overall liquidity resources.

Confirmation Term

OCC is also proposing to modify the confirmation term to allow more flexibility in negotiating terms with institutional investors. Confirmations under the current Non-Bank Liquidity Facility program are limited to a commitment term greater than or equal to 364-days. Based on ongoing negotiations with potential institutional investors, OCC believes there is interest for commitments that are shorter than one year.[18] OCC is proposing to adjust the required terms and conditions as filed with the Commission in the 2015 Advance Notice filing to allow for a commitment term of less than 364 days, as negotiated by the parties and approved by OCC's Board. The proposed modification to the program would allow for, among other things, a confirmation with a shorter commitment term as well as an open-ended term that allows for termination subject to a notice period. Providing flexibility in the commitment term may make the Non-Bank Liquidity Facility more commercially attractive to institutional investors who desire more flexibility in the confirmation term. Additionally, termination subject to notice would benefit OCC by ensuring that OCC will have a pre-set notice period to manage its liquidity resources to replace an expiring confirmation or adjust the levels of other liquidity resources.

The Board reviews proposed terms under the Non-Bank Liquidity Program and authorizes Management to enter into and renew transactions upon expiration. The length of term or notice period OCC would be willing to accept would be conditioned on factors including, but not limited to, the initial committed length of the term, market conditions and OCC's liquidity needs. For a confirmation without a defined commitment term, OCC would target to negotiate a six-month notice period. Based on the expiration of the Prior Confirmations, OCC believes that six-months' notice is sufficient time to allow OCC to reallocate liquidity resources to address a confirmation's termination. Because of the time and cost required to negotiate and close transactions, OCC believes it unlikely that it would pursue a commitment of less than three months.

Anticipated Effect On and Management of Risk

Completing timely settlement is a key aspect of OCC's role as a clearing agency performing central counterparty services. Modifying the Non-Bank Liquidity Facility program to provide OCC more flexibility in seeking confirmations would continue to promote the reduction of risks to OCC, its Clearing Members and the options market in general because it would allow OCC to continue to obtain short-term funds from the Non-Bank Liquidity Facility to address liquidity demands arising out of the default or suspension of a Clearing Member, in anticipation of a potential default or suspension of Clearing Members, the insolvency of a bank or another securities or commodities clearing organization, or the failure of a bank or another securities or commodities clearing organization to achieve daily settlement.

The Non-Bank Liquidity Facility helps OCC minimize losses in the event of a default, suspension, insolvency, or failure to achieve daily settlement, by allowing it to obtain funds from sources not connected to OCC's Clearing Members on extremely short notice to ensure clearance and settlement of transactions in options and other contracts without interruption. OCC believes that the reduced settlement risk presented by OCC resulting from the proposed change would correspondingly reduce systemic risk and promote the safety and soundness of the clearing system. The ability to borrow funds from the Non-Bank Liquidity Facility would allow OCC to avoid liquidating margin or clearing fund assets in what would likely be volatile market conditions, which would preserve funds available to cover any losses resulting from the failure of a Clearing Member, bank or other clearing organization.

The proposed change to allow OCC to seek an aggregate commitment amount under the Non-Bank Liquidity Facility for up to the currently approved limit would help OCC ensure the continued availability of its liquidity resources by providing OCC with the flexibility to seek additional funding amounts at substantially the same terms, conditions, operations, and mechanics of the Prior Confirmations. Furthermore, allowing for OCC to negotiate a term less than 364-days would allow OCC more flexibility in negotiating confirmations with institutional investors, and would allow OCC the ability to negotiate terms that give OCC more time to respond to an institutional investor's decision not to renew a confirmation. Such flexibility would allow OCC to reallocate the amount of funding available under the confirmations at the time of a confirmation's renewal or termination and to manage liquidity needs and enhance its ability to ensure continual liquidity resources.

Because the proposed change preserves substantially the same terms and conditions as the MRA and the Prior Confirmation, OCC believes that the proposed change would not otherwise affect or alter the management of risk at OCC.

Consistency With the Payment, Clearing and Settlement Supervision Act

The stated purpose of the Clearing Supervision Act is to mitigate systemic risk in the financial system and promote financial stability by, among other things, promoting uniform risk management standards for systemically important financial market utilities and strengthening the liquidity of systemically important financial market utilities.[19] Section 805(a)(2) of the Clearing Supervision Act[20] also authorizes the Commission to prescribe risk management standards for the payment, clearing and settlement activities of designated clearing entities, like OCC, for which the Commission is the supervisory agency. Section 805(b) of the Clearing Supervision Act[21] states that the objectives and principles for risk management standards prescribed under Section 805(a) shall be to:

- Promote robust risk management;
- promote safety and soundness;
- reduce systemic risks; and
- support the stability of the broader financial system.

The Commission has adopted risk management standards under Section 805(a)(2) of the Clearing Supervision Act and the Exchange Act in furtherance of these objectives and principles.[22]

[18] OCC included information about the current status of negotiations with potential counterparties in Exhibit 3b to File No. SR–OCC–2020–803. The exhibit is a non-public document for which OCC has submitted a request for confidential treatment to the Commission.

[19] 12 U.S.C. 5461(b).

[20] 12 U.S.C. 5464(a)(2).

[21] 12 U.S.C. 5464(b).

[22] 17 CFR 240.17Ad–22. *See* Exchange Act Release Nos. 68080 (October 22, 2012), 77 FR 66220 (November 2, 2012) (S7–08–11) (''Clearing Agency Standards''); 78961 (September 28, 2016), 81 FR

Continued

Rule 17Ad–22 requires registered clearing agencies, like OCC, to establish, implement, maintain, and enforce written policies and procedures that are reasonably designed to meet certain minimum requirements for their operations and risk management practices on an ongoing basis.[23] Therefore, the Commission has stated [24] that it believes it is appropriate to review changes proposed in advance notices against Rule 17Ad–22 and the objectives and principles of these risk management standards as described in Section 805(b) of the Clearing Supervision Act.[25]

OCC believes that the Non-Bank Liquidity Facility program, as modified, is consistent with Section 805(b)(1) of the Clearing Supervision Act [26] because the proposed confirmations would provide OCC with an additional source of committed liquidity to meet its settlement obligations while at the same time being structured to mitigate certain operational risks, as described above, that arise in connection with this committed liquidity source. In this way, the proposed changes are designed to promote robust risk management; promote safety and soundness; reduce systemic risks; and support the stability of the broader financial system.

OCC believes that the Non-Bank Liquidity Facility program, as modified, is also consistent with the requirements of Rule 17Ad–22(e)(7) under the Exchange Act.[27] Rule 17Ad–22(e)(7) requires OCC to establish, implement, maintain and enforce written policies and procedures reasonably designed to effectively measure, monitor, and manage liquidity risk that arises in or is borne by OCC, including measuring, monitoring, and managing its settlement and funding flows on an ongoing and timely basis, and its use of intraday liquidity, as specified in the rule.[28] In particular, Rule 17Ad–22(e)(7)(i) under the Exchange Act [29] directs that OCC meet this obligation by, among other things, ''[m]aintaining sufficient liquid resources at the minimum in all relevant currencies to effect same-day . . . settlement of payment obligations with a high degree of confidence under a wide range of foreseeable stress scenarios that includes, but is not limited to, the default of the participant family that would generate the largest aggregate payment obligation for [OCC] in extreme but plausible market conditions.''

As described above, the proposed change would allow OCC to seek a readily available liquidity resource that would enable it to, among other things, continue to meet its obligations in a timely fashion and as an alternative to selling Clearing Member collateral under what may be stressed and volatile market conditions. For these reasons, OCC believes that the proposal is consistent with Rule 17Ad–22(e)(7)(i).[30]

Rule 17Ad–22(e)(7)(ii) under the Exchange Act requires OCC to establish, implement, maintain and enforce written policies and procedures reasonably designed to hold qualifying liquid resources sufficient to satisfy payment obligations owed to Clearing Members.[31] Rule 17Ad–22(a)(14) of the Exchange Act defines ''qualifying liquid resources'' to include, among other things, lines of credit without material adverse change provisions, that are readily available and convertible into cash.[32] The MRA under the Non-Bank Liquidity Facility would not be subject to any material adverse change provision and would continue to be designed to permit OCC to, among other things, help ensure that OCC has sufficient, readily-available qualifying liquid resources to meet the cash settlement obligations of its largest Clearing Member Group. Therefore, OCC believes that the proposal is consistent with Rule 17Ad–22(e)(7)(ii).[33]

For the foregoing reasons, OCC believes that the proposed changes are consistent with Section 805(b)(1) of the Clearing Supervision Act [34] and Rule 17Ad–22(e)(7) [35] under the Exchange Act.

III. Date of Effectiveness of the Advance Notice and Timing for Commission Action

The proposed change may be implemented if the Commission does not object to the proposed change within 60 days of the later of (i) the date the proposed change was filed with the Commission or (ii) the date any additional information requested by the Commission is received. OCC shall not implement the proposed change if the Commission has any objection to the proposed change.

The Commission may extend the period for review by an additional 60 days if the proposed change raises novel or complex issues, subject to the Commission providing the clearing agency with prompt written notice of the extension. A proposed change may be implemented in less than 60 days from the date the advance notice is filed, or the date further information requested by the Commission is received, if the Commission notifies the clearing agency in writing that it does not object to the proposed change and authorizes the clearing agency to implement the proposed change on an earlier date, subject to any conditions imposed by the Commission.

OCC shall post notice on its website of proposed changes that are implemented. The proposal shall not take effect until all regulatory actions required with respect to the proposal are completed.

IV. Solicitation of Comments

Interested persons are invited to submit written data, views, and arguments concerning the foregoing, including whether the advance notice is consistent with the Clearing Supervision Act. Comments may be submitted by any of the following methods:

Electronic Comments

- Use the Commission's internet comment form (*http://www.sec.gov/rules/sro.shtml*); or
- Send an email to *rule-comments@sec.gov.* Please include File Number SR–OCC–2020–803 on the subject line.

Paper Comments

- Send paper comments in triplicate to Secretary, Securities and Exchange Commission, 100 F Street NE, Washington, DC 20549.

All submissions should refer to File Number SR–OCC–2020–803. This file number should be included on the subject line if email is used. To help the Commission process and review your comments more efficiently, please use only one method. The Commission will post all comments on the Commission's internet website (*http://www.sec.gov/rules/sro.shtml*). Copies of the submission, all subsequent amendments, all written statements with respect to the advance notice that are filed with the Commission, and all written communications relating to the advance notice between the Commission and any person, other than those that may be withheld from the public in accordance with the

70786 (October 13, 2016) (S7–03–14) (''Standards for Covered Clearing Agencies'').

[23] 17 CFR 240.17Ad–22.

[24] *See, e.g.,* Exchange Act Release No. 86182 (June 24, 2019), 84 FR 31128, 31129 (June 28, 2019) (SR–OCC–2019–803).

[25] 12 U.S.C. 5464(b).

[26] 12 U.S.C. 5464(b)(1).

[27] 17 CFR 240.17Ad–22(e)(7).

[28] *Id.*

[29] 17 CFR 240.17Ad–22(e)(7)(i).

[30] *Id.*

[31] 17 CFR 240.17Ad–22(e)(7)(ii).

[32] 17 CFR 240.17Ad–22(a)(14).

[33] 17 CFR 240.17Ad–22(e)(7)(ii).

[34] 12 U.S.C. 5464(b)(1).

[35] 17 CFR 240.17Ad–22(e)(7).

provisions of 5 U.S.C. 552, will be available for website viewing and printing in the Commission's Public Reference Room, 100 F Street NE, Washington, DC 20549 on official business days between the hours of 10:00 a.m. and 3:00 p.m. Copies of the filing also will be available for inspection and copying at the principal office of the self-regulatory organization.

All comments received will be posted without change. Persons submitting comments are cautioned that we do not redact or edit personal identifying information from comment submissions. You should submit only information that you wish to make available publicly.

All submissions should refer to File Number SR–OCC–2020–803 and should be submitted on or before June 8, 2020.

By the Commission.

J. Matthew DeLesDernier,

Assistant Secretary.

[FR Doc. 2020–11122 Filed 5–21–20; 8:45 am]

BILLING CODE 8011–01–P

SECURITIES AND EXCHANGE COMMISSION

Sunshine Act Meeting; Cancellation

FEDERAL REGISTER CITATION OF PREVIOUS ANNOUNCEMENT: 85 FR 29773, May 18, 2020.

PREVIOUSLY ANNOUNCED TIME AND DATE OF THE MEETING: Wednesday, May 20, 2020 at 2:00 p.m.

CHANGES IN THE MEETING: The Closed Meeting scheduled for Wednesday, May 20, 2020 at 2:00 p.m., has been cancelled.

CONTACT PERSON FOR MORE INFORMATION: For further information; please contact Vanessa A. Countryman from the Office of the Secretary at (202) 551–5400.

Dated: May 20, 2020.

Vanessa A. Countryman,

Secretary.

[FR Doc. 2020–11216 Filed 5–20–20; 11:15 am]

BILLING CODE 8011–01–P

SECURITIES AND EXCHANGE COMMISSION

[Release No. 34–88893; File No. SR–MIAX–2020–10]

Self-Regulatory Organizations; Miami International Securities Exchange, LLC; Notice of Filing and Immediate Effectiveness of a Proposed Rule Change To Amend Exchange Rule 307, Position Limits, and Exchange Rule 309, Exercise Limits, To Increase the Position and Exercise Limits on Certain Exchange-Traded Funds

May 18, 2020.

Pursuant to Section 19(b)(1) of the Securities Exchange Act of 1934 (''Act''),[1] and Rule 19b–4 thereunder,[2] notice is hereby given that on May 8, 2020, Miami International Securities Exchange, LLC (''MIAX'' or the ''Exchange'') filed with the Securities and Exchange Commission (''Commission'') the proposed rule change as described in Items I and II below, which Items have been prepared by the Exchange. The Commission is publishing this notice to solicit comments on the proposed rule change from interested persons.

I. Self-Regulatory Organization's Statement of the Terms of the Substance of the Proposed Rule Change

The Exchange is filing a proposal to amend Interpretation and Policy .01 to Exchange Rule 307, Position Limits, and Interpretation and Policy .01 to Exchange Rule 309, Exercise Limits, to increase the position and exercise limits on certain exchange-traded funds (''ETFs'') and to make minor non-substantive technical corrections to each Policy.

The text of the proposed rule change is available on the Exchange's website at *http://www.miaxoptions.com/rule-filings/* at MIAX's principal office, and at the Commission's Public Reference Room.

II. Self-Regulatory Organization's Statement of the Purpose of, and Statutory Basis for, the Proposed Rule Change

In its filing with the Commission, the Exchange included statements concerning the purpose of and basis for the proposed rule change and discussed any comments it received on the proposed rule change. The text of these statements may be examined at the places specified in Item IV below. The Exchange has prepared summaries, set forth in sections A, B, and C below, of the most significant aspects of such statements.

A. Self-Regulatory Organization's Statement of the Purpose of, and Statutory Basis for, the Proposed Rule Change

1. Purpose

The Exchange proposes to amend Interpretation and Policy .01 to Exchange Rule 307, Position Limits, and Interpretation and Policy .01 to Exchange Rule 309, Exercise Limits, to increase the position and exercise limits for options on certain ETFs. These proposed rule changes are based on the similar proposal by Cboe Exchange, Inc. (''Cboe'').[3] The Exchange also proposes to make certain minor non-substantive technical corrections to certain ETF names and symbols in each of the tables in Interpretations and Policies .01 to Exchange Rules 307 and 309, as described below.

Position limits are designed to address potential manipulative schemes and adverse market impacts surrounding the use of options, such as disrupting the market in the security underlying the options. While position limits should address and discourage the potential for manipulative schemes and adverse market impact, if such limits are set too low, participation in the options market may be discouraged. The Exchange believes that position limits must therefore be balanced between mitigating concerns of any potential manipulation and the cost of inhibiting potential hedging activity that could be used for legitimate economic purposes.

[1] 15 U.S.C. 78s(b)(1).

[2] 17 CFR 240.19b–4.

[3] *See* Securities Exchange Act Release No. 88768 (April 29, 2020) (SR–CBOE–2020–015) (Notice of Filing of Amendment No. 1 and Order Granting Accelerated Approval of a Proposed Rule Change, as Modified by Amendment No. 1, to Increase Position Limits for Options on Certain Exchange-Traded Funds and Indexes). The Cboe proposal also proposed to increase position limits for options overlying the MSCI Emerging Markets Index (''MXEF'') and the MSCI EAFE Index (''MXEA''). The Exchange, however, does not list options on the MXEF or MXEA indexes. Accordingly, this proposal is limited to the ETFs described above [sic].

The Exchange has observed an ongoing increase in demand in options on the SPDR® S&P 500® ETF Trust (''SPY''), iShares® MSCI EAFE ETF (''EFA''), iShares® China Large-Cap ETF (''FXI''), iShares® iBoxx® $ High Yield Corporate Bond ETF (''HYG''), and the Financial Select Sector SPDR® Fund (''XLF'') (collectively, with the aforementioned ETFs, the ''Underlying ETFs'') for both trading and hedging purposes. Though the demand for these options appears to have increased, position limits (and corresponding exercise limits) for options on the Underlying ETFs have remained the same. The Exchange believes these unchanged position limits may have impeded, and may continue to impede, trading activity and strategies of investors, such as use of effective hedging vehicles or income generating strategies (*e.g.,* buy-write or put-write), and the ability of Market Makers [4] to make liquid markets with tighter spreads in these options resulting in the transfer of volume to over-the-counter (''OTC'') markets. OTC transactions occur through bilateral agreements, the terms of which are not publically disclosed to the marketplace. As such, OTC transactions do not contribute to the price discovery process on a public exchange or other lit markets. Therefore, the Exchange believes that the proposed increases in position limits (and exercise limits) for options on the Underlying ETFs may enable liquidity providers to provide additional liquidity to the Exchange and other market participants to transfer their liquidity demands from OTC markets to the Exchange, as well as other options exchanges on which they participate. As described in further detail below, the Exchange believes that the continuously increasing market capitalization of the Underlying ETFs and ETF component securities, as well as the highly liquid markets for those securities, reduces the concerns for potential market manipulation and/or disruption in the underlying markets upon increasing position limits, while the rising demand for trading options on the Underlying ETFs for legitimate economic purposes compels an increase in position limits (and corresponding exercise limits).

Proposed Position and Exercise Limits for Options on the Underlying ETFs

Position limits for options on ETFs are determined pursuant to Exchange Rule 307, and vary according to the number of outstanding shares and the trading volumes of the underlying stocks or ETFs over the past six months. Pursuant to Exchange Rule 307, the largest in capitalization and the most frequently traded stocks and ETFs have an option position limit of 250,000 contracts (with adjustments for splits, re-capitalizations, etc.) on the same side of the market; and smaller capitalization stocks and ETFs have position limits of 200,000, 75,000, 50,000 or 25,000 contracts (with adjustments for splits, recapitalizations, etc.) on the same side of the market. Options on HYG and XLF are currently subject to the maximum standard position limit of 250,000 contracts as set forth in Exchange Rule 307. Interpretation and Policy .01 to Exchange Rule 307 sets forth separate position limits for options on specific ETFs, including SPY, FXI and EFA.

The Exchange proposes to amend Interpretation and Policy .01 to Exchange Rule 307 to double the position limits for options on each of HYG, XLF, FXI, EFA and SPY. The Exchange also proposes to amend Interpretation and Policy .01 to Exchange Rule 309 to double the exercise limits for options on each of HYG, XLF, FXI, EFA and SPY. The table below represents the current, and proposed, position and exercise limits for options on the Underlying ETFs subject to this proposal:

ETF	Current position/ exercise limit	Proposed position/ exercise limit
SPY	1,800,000	3,600,000
EFA	500,000	1,000,000
FXI	500,000	1,000,000
HYG	250,000	500,000
XLF	250,000	500,000

The Exchange notes that the proposed position limits for options on EFA and FXI are consistent with existing position limits for options on the iShares® Russell 2000 ETF (''IWM'') and the iShares® MSCI Emerging Markets ETF (''EEM''), while the proposed limits for options on XLF and HYG are consistent with current position limits for options on the iShares® MSCI Brazil ETF (''EWZ''), iShares® 20+ Year Treasury Bond ETF (''TLT''), and iShares® MSCI Japan ETF (''EWJ''). The Exchange represents that the Underlying ETFs qualify for either 1) the initial listing criteria set forth in Exchange Rule 402(i)(5)(ii) for ETFs holding non-U.S. component securities, or 2) the generic listing standards for series of portfolio depository receipts and index fund shares based on international or global indexes under which a comprehensive surveillance agreement (''CSA'') is not required, as well as the continued listing criteria in Exchange Rule 403.[5] In compliance with its listing rules, the Exchange also represents that non-U.S. component securities that are not subject to a CSA do not, in the aggregate, represent more than 50% of the weight of any of the Underlying ETFs.[6]

Composition and Growth Analysis for Underlying ETFs

As stated above, position (and exercise) limits are intended to prevent the establishment of options positions that can be used or might create incentives to manipulate the underlying market so as to benefit options positions. The Commission has recognized that these limits are designed to minimize the potential for mini-manipulations and for corners or squeezes of the underlying market, as well as serve to reduce the possibility for disruption of the options market itself, especially in illiquid classes.[7] The

[4] The term ''Market Makers'' refers to ''Lead Market Makers'', ''Primary Lead Market Makers'' and ''Registered Market Makers'' collectively. *See* Exchange Rule 100. A Market Maker has the rights and responsibilities set forth in Chapter VI of the Exchange's Rulebook.

[5] The Exchange notes that the initial listing criteria for options on ETFs that hold non-U.S. component securities are more stringent than the maintenance listing criteria for those same ETF options. *See* Exchange Rule 402(i)(5)(ii) and Exchange Rule 403(g).

[6] *See* Exchange Rule 402(i)(5)(ii).

[7] *See* Securities Exchange Act Release No. 67672 (August 15, 2012), 77 FR 50750 (August 22, 2012) (SR–NYSEAmex–2012–29).

Underlying ETFs as well as the ETF components are highly liquid, and are based on a broad set of highly liquid securities and other reference assets, as demonstrated through the trading statistics presented in this proposal. Indeed, the Commission recognized the liquidity of the securities comprising the underlying interest of SPY and permitted no position limits on SPY options from 2012 through 2018.[8]

To support the proposed position limit increases (and corresponding increase in exercise limits), the Exchange considered both the liquidity of the Underlying ETFs and the component securities of the Underlying ETFs, as well as the availability of economically equivalent products to the overlying options and their respective position limits. For instance, some of the Underlying ETFs are based upon broad-based indices that underlie cash-settled options, and therefore the options on the Underlying ETFs are economically equivalent to the options on those indices, which have no position limits. Other Underlying ETFs are based upon broad-based indices that underlie cash-settled options with position limits reflecting notional values that are larger than current position limits for options on the ETF analogues. For indexes that are tracked by an Underlying ETF but on which there are no options listed, the Exchange believes, based on the liquidity, depth and breadth of the underlying market of the components of the indexes, that each of the indexes referenced by the applicable ETFs would be considered a broad-based index under the Exchange's Rules. Additionally, if in some cases certain position limits are appropriate for the options overlying comparable indexes or basket of securities that the Underlying ETFs track, or are appropriate for those ETFs that track the Underlying Indexes [sic], then those economically equivalent position limits should be appropriate for the options overlying the Underlying ETFs or Indexes [sic].

The Exchange is presenting data collected by Cboe as part of its initial filing to increase position and exercise limits on the Underlying ETFs, that the Commission has approved,[9] following trading statistics regarding shares of and options on the Underlying ETFs, as well as the component securities:

Product	ADV [10] (ETF shares) (million)	ADV (option contracts)	Shares outstanding (ETFs) [11] (million)	Fund market cap (USD) (billion)	Total market cap of ETF components [12]
SPY	70.3	2.8 million	968.7	312.9	29.3 trillion.
FXI	26.1	196,600	106.8	4.8	28.0 trillion.
EFA	25.1	155,900	928.2	64.9	19.3 trillion.
HYG	20.0	193,700	216.6	19.1	906.4 billion.[13]
XLF	48.8	102,100	793.6	24.6	3.8 trillion.

The Exchange is presenting the following data collected by Cboe as part of its initial filing, that the Commission has approved,[14] for the same trading statistics, where applicable, as above regarding a sample of other ETFs, as well as the current position limits for options on such ETFs pursuant to Exchange Rule 307, Interpretation and Policy .01, to draw comparisons in support of proposed position limit increases for options on a number of the Underlying ETFs (see further discussion below):

Product	ADV (ETF shares) (million)	ADV (option contracts)	Shares outstanding (ETFs) (million)	Fund market cap (USD) (billion)	Total market cap of ETF components	Current position limits
QQQ	30.2	670,200	410.3	88.7	10.1 trillion	1,800,000
EWZ	26.7	186,500	233	11.3	234.6 billion	500,000
TLT	9.6	95,200	128.1	17.5	N/A	500,000
EWJ	7.2	5,700	236.6	14.2	3 trillion	500,000

The Exchange believes that, overall, the liquidity in the shares of the Underlying ETFs and in the component securities of the Underlying ETFs and in their overlying options, as well as the large market capitalizations and structure of each of the Underlying ETFs support the proposal to increase the position limits for each option class (and corresponding exercise limits). Given the robust liquidity and capitalization in the Underlying ETFs and in the component securities of the Underlying ETFs the Exchange does not anticipate that the proposed increase in position limits and exercise limits would create significant price movements. Also, the Exchange believes the market capitalization of the underlying component securities of the applicable index or reference asset are large enough to adequately absorb potential price movements that may be caused by large trades.

The following analyses for the Underlying ETFs, which MIAX agrees with in support of this proposal, as well as the statistics presented in support thereof, were presented by Cboe in their initial filing, which was approved by

[8] *See* Securities Exchange Act Release No. 68341 (December 3, 2012), 77 FR 73065 (December 7, 2012) (In the Matter of the Application of Miami International Securities Exchange, LLC for Registration as a National Securities Exchange: Findings, Opinion, and Order of the Commission) (Order that approved MIAX's implementation of the pilot program that ran through 2017, during which there were no position limits for options on SPY). *See also* Securities Exchange Act Release No. 83349 (May 30, 2018), 83 FR 26123 (June 5, 2018) (SR–MIAX–2018–11). The Exchange notes that throughout the duration of the pilot program it was not aware of any problems created or adverse consequences as a result of the pilot program.

[9] *See supra* note 3.

[10] Average daily volume (''ADV'') data for ETF shares and options contracts presented below, are for all of 2019. Additionally, reference to ADV in ETF shares and ETF options herein this proposal are for all of 2019, unless otherwise indicated.

[11] *See* Amendment No. 1 to SR–CBOE–2020–015, at page 4, available at *https://www.sec.gov/comments/sr-cboe-2020-015/srcboe2020015-7081714-215592.pdf* (''Amendment No. 1'').

[12] *See* Amendment No. 1, at page 4.

[13] *See* Notice, at note 13.

[14] *See supra* note 3.

the Commission.[15] The Exchange notes that SPY tracks the performance of the S&P 500® Index, which is an index of diversified large cap U.S. companies.[16] It is composed of approximately 500 selected stocks spanning over approximately 24 separate industry groups. The S&P 500® is one of the most commonly followed equity indices, and is widely considered to be the best indicator of stock market performance as a whole. SPY is one of the most actively traded ETFs, and, since 2017,[17] its ADV has increased from approximately 64.6 million shares to 70.3 million shares by the end of 2019. Similarly, its ADV in options contracts has increased from 2.6 million to 2.8 million through 2019.[18] As noted, the demand for options trading on SPY has continued to increase, however, the position limits have remained the same, which the Exchange believes may have impacted growth in SPY option volume from 2017 through 2019. The Exchange also notes that SPY shares are more liquid than Invesco QQQ Trust℠ (''QQQ'') shares, which are also currently subject to a position limit of 1,800,000 contracts. Specifically, SPY currently experiences over twice the ADV in shares and over four times the ADV in options than that of QQQ.[19]

EFA tracks the performance of MSCI EAFE Index, which is comprised of over 900 large and mid-cap securities across 21 developed markets, including countries in Europe, Australia and the Far East, excluding the U.S. and Canada.[20] The Exchange notes that from 2017 through 2019, ADV has grown significantly in shares of EFA and in options on EFA, from approximately 19.4 million shares in 2017 to 25.1 million through 2019, and from approximately 98,800 options contracts in 2017 to 155,900 through 2019. The Exchange notes that options are available for trading on Cboe on the MXEA, the analogue index (also subject to a proposed position limit increase described in the Cboe proposal), which was subject to a position limit of 25,000 contracts. Utilizing the notional value comparison of EFA's share price of $69.44 and MXEA's index level of 2036.94, approximately 29 EFA option contracts equal one MXEA option contract. Based on the above comparison of notional values, a position limit for EFA options that would be economically equivalent to that of MXEA options equates to 725,000 contracts (currently) and 1,450,000 (for Cboe's proposed—and approved—50,000 contracts position limit increase for MXEA options). Also, MXEA index options have an ADV of 594 options contracts, which equates to an ADV of 17,226 EFA options contracts (as that is 29 times the size of 594). EFA options, which are more actively traded and held than MXEA options, are currently subject to a position limit of 500,000 options contracts despite their much higher ADV of approximately 156,700 options contracts.

FXI tracks the performance of the FTSE China 50 Index, which is composed of the 50 largest Chinese stocks.[21] FXI shares and options have also experienced increased liquidity since 2017, as ADV has grown from approximately 15.1 million shares in 2017 to 26.1 million through 2019, as well as approximately 71,900 options contracts in 2017 to 196,600 through 2019. Although there are currently no options on the FTSE China 50 Index listed for trading, the components of the FTSE China 50 Index, which can be used to create a basket of stocks that equate to the FXI ETF, currently have a market capitalization of approximately $28 trillion and FXI has a market capitalization of $4.8 billion (as indicated above), which the Exchange believes are both large enough to absorb potential price movements caused by a large trade in FXI.

XLF invests in a wide array of financial service firms with diversified business lines ranging from investment management to commercial and investment banking. It generally corresponds to the price and yield performance of publicly traded equity securities of companies in the SPDR Financial Select Sector Index.[22] XLF experiences ADV in shares and in options that is significantly greater that the ADV in shares and options for EWZ (26.7 million shares and 186,500 options contracts), TLT (9.6 million shares and 95,200 options contracts), and EWJ (7.2 million shares and 5,700 options contracts), each of which already have a position limit of 500,000 contracts—the proposed position limit for XLF options. Although there are no options listed on the SPDR Financial Select Sector Index listed for trading, the components of the index, which can be used to create a basket of stocks that equate to the XLF ETF, currently have a market capitalization of $3.8 trillion (indicated above). Additionally, XLF has a market capitalization of $24.6 billion. The Exchange believes that both of these are large enough to absorb potential price movements caused by a large trade in XLF.

Finally, HYG attempts to track the investment results of Markit iBoxx® USD Liquid High Yield Index, which is composed of U.S. dollar-denominated, high-yield corporate bonds and is one of the most widely used high-yield bond ETFs.[23] HYG experiences significantly higher ADV in shares and options than both TLT (9.6 million shares and 95,200 options contracts), and EWJ (7.2 million shares and 5,700 options contracts), which are currently subject to a position limit of 500,000 options contracts—the proposed limit for options on HYG. While HYG does not have an index option analogue listed for trading, the Exchange believes that its market capitalization of $19.1 billion, and of $906.4 billion in component securities, is adequate to absorb a potential price movement that may be caused by large trades in HYG.

Creation and Redemption for ETFs

The Exchange believes that the creation and redemption process for ETFs will lessen the potential for manipulative activity with options on the Underlying ETFs. When an ETF provider wants to create more shares, it looks to an Authorized Participant (generally a market maker or other large financial institution) to acquire the securities the ETF is to hold. For instance, when an ETF is designed to track the performance of an index, the Authorized Participant can purchase all the constituent securities in the exact same weight as the index, then deliver those shares to the ETF provider. In exchange, the ETF provider gives the Authorized Participant a block of equally valued ETF shares, on a one-for-

[15] *See supra* note 3.

[16] *See* Supplement dated March 25, 2020 to the Prospectus dated January 16, 2020 for the SPDR® S&P 500® ETF Trust, available at *https://www.ssga.com/us/en/individual/etfs/funds/spdr-sp-500-etf-trust-spy*.

[17] *See* Securities Exchange Release No. 82931 (March 22, 2018), 83 FR 13323 (March 28, 2018) (SR–MIAX–2018–10) (Notice of Filing and Immediate Effectiveness of a Proposed Rule Change To Amend Exchange Rule 307, Position Limits, and Exchange Rule 309, Exercise Limits). *See also supra* note 3.

[18] *See* Securities Exchange Act Release No. 83349 (May 30, 2018), 83 FR 26123 (June 5, 2018) (Notice of Filing and Immediate Effectiveness of a Proposed Rule Change To Amend Exchange Rule 307, Position Limits, and Exchange Rule 309, Exercise Limits) (SR–MIAX–2018–11).

[19] The 2019 ADV for QQQ shares is 30.2 million and for options on QQQ is 670,200.

[20] *See* iShares MSCI EAFE ETF, available at *https://www.ishares.com/us/products/239623/ishares-msci-eafe-etf* (April 30, 2020).

[21] *See* iShares China Large-Cap ETF, available at *https://www.ishares.com/us/products/239536/ishares-china-largecap-etf* (April 30, 2020).

[22] *See* Select Sector SPDR ETFs, XLF, available at *http://www.sectorspdr.com/sectorspdr/sector/xlf* (April 30, 2020).

[23] *See* iShares iBoxx $ High Yield Corporate Bond ETF, available at *https://www.ishares.com/us/products/239565/ishares-iboxx-high-yield-corporatebond-etf* (April 30, 2020).

one fair value basis. The price is based on the net asset value, not the market value at which the ETF is trading. The creation of new ETF units can be conducted during an entire trading day, and is not subject to position limits. This process works in reverse where the ETF provider seeks to decrease the number of shares that are available to trade. The creation and redemption process, therefore, creates a direct link to the underlying components of the ETF, and serves to mitigate potential price impact of the ETF shares that might otherwise result from increased position limits for the ETF options.

The Exchange understands that the ETF creation and redemption process seeks to keep an ETF's share price trading in line with the ETF's underlying net asset value. Because an ETF trades like a stock, its share price will fluctuate during the trading day, due to simple supply and demand. If demand to buy an ETF is high, for instance, the ETF's share price might rise above the value of its underlying securities. When this happens, the Authorized Participant believes the ETF may now be overpriced, so it may buy shares of the component securities and then sell ETF shares in the open market (*i.e.* creations). This may drive the ETF's share price back toward the underlying net asset value. Likewise, if the ETF share price starts trading at a discount to the securities it holds, the Authorized Participant can buy shares of the ETF and redeem them for the underlying securities (*i.e.* redemptions). Buying undervalued ETF shares may drive the share price of the ETF back toward fair value. This arbitrage process helps to keep an ETF's share price in line with the value of its underlying portfolio.

Surveillance and Reporting Requirements

The Exchange believes that increasing the position limits for the options on the Underlying ETFs would lead to a more liquid and competitive market environment for these options, which will benefit customers interested in trading these products. The reporting requirement for the options on the Underlying ETFs would remain unchanged. Thus, the Exchange would still require that each Member [24] that maintains positions in the options on the same side of the market, for its own account or for the account of a customer, report certain information to the Exchange. This information would include, but would not be limited to, the options' positions, whether such positions are hedged and, if so, a description of the hedge(s). Market Makers would continue to be exempt from this reporting requirement, however, the Exchange may access Market Maker position information. [25] Moreover, the Exchange's requirement that Members file reports with the Exchange for any customer who held aggregate large long or short positions on the same side of the market of 200 or more options contracts of any single class for the previous day will remain at this level for the options subject to this proposal and will continue to serve as an important part of the Exchange's surveillance efforts.[26]

The Exchange believes that the existing surveillance procedures and reporting requirements at the Exchange and other SROs are capable of properly identifying disruptive and/or manipulative trading activity. The Exchange also represents that it has adequate surveillances in place to detect potential manipulation, as well as reviews in place to identify potential changes in composition of the Underlying ETFs and continued compliance with the Exchange's listing standards. These procedures utilize daily monitoring of market activity via automated surveillance techniques to identify unusual activity in both options and the underlyings, as applicable.[27] The Exchange also notes that large stock holdings must be disclosed to the Commission by way of Schedules 13D or 13G,[28] which are used to report ownership of stock which exceeds 5% of a company's total stock issue and may assist in providing information in monitoring for any potential manipulative schemes.

The Exchange believes that the current financial requirements imposed by the Exchange and by the Commission adequately address concerns regarding potentially large, unhedged positions in the options on the Underlying ETFs. Current margin and risk-based haircut methodologies serve to limit the size of positions maintained by any one account by increasing the margin and/or capital that a Member must maintain for a large position held by itself or by its customer.[29] In addition, Rule 15c3–1 [30] imposes a capital charge on Members to the extent of any margin deficiency resulting from the higher margin requirement.

Additionally, the Exchange proposes to make minor non-substantive technical changes to the charts in Interpretations and Policies .01 of both Exchange Rules 307 and 309 to reflect the current names of the underlying securities listed therein. Specifically, the Exchange proposes to update the names of the following ETFs to reflect the current names in the prospectus for each: Powershares QQQ Trust; iShares China Large-Cap ETF; iShares MSCI EAFE ETF; iShares MSCI Brazil Capped ETF; iShares 20+ Year Treasury Bond Fund ETF; and the iShares MSCI Japan ETF.

2. Statutory Basis

The Exchange believes the proposed rule change is consistent with the Act and the rules and regulations thereunder applicable to the Exchange and, in particular, the requirements of Section 6(b) of the Act.[31] Specifically, the Exchange believes the proposed rule change is consistent with the Section 6(b)(5) [32] requirements that the rules of an exchange be designed to prevent fraudulent and manipulative acts and practices, to promote just and equitable principles of trade, to foster cooperation and coordination with persons engaged in regulating, clearing, settling, processing information with respect to, and facilitating transactions in securities, to remove impediments to and perfect the mechanism of a free and open market and a national market system, and, in general, to protect investors and the public interest. Additionally, the Exchange believes the proposed rule change is consistent with the Section 6(b)(5) [33] requirement that the rules of an exchange not be designed to permit unfair discrimination between customers, issuers, brokers, or dealers.

The Exchange believes that the proposed increase in position limits for options on the Underlying ETFs will remove impediments to and perfect the mechanism of a free and open market and a national market system, and, in general, protect investors and the public

[24] The term ''Member'' means an individual or organization approved to exercise the trading rights associated with a Trading Permit. Members are deemed ''members'' under the Exchange Act. *See* Exchange Rule 100.

[25] The Options Clearing Corporation (''OCC'') through the Large Option Position Reporting (''LOPR'') system acts as a centralized service provider for Member compliance with position reporting requirements by collecting data from each Member, consolidating the information, and ultimately providing detailed listings of each Member's report to the Exchange, as well as Financial Industry Regulatory Authority, Inc. (''FINRA''), acting as its agent pursuant to a regulatory services agreement (''RSA'').

[26] *See* Exchange Rule 310.

[27] The Exchange believes these procedures have been effective for the surveillance of trading the options subject to this proposal, and will continue to employ them.

[28] 17 CFR 240.13d–1.

[29] *See* Exchange Rule 1502 for a description of margin requirements.

[30] 17 CFR 240.15c3–1.

[31] 15 U.S.C. 78f(b).

[32] 15 U.S.C. 78f(b)(5).

[33] *Id.*

interest, because it will provide market participants with the ability to more effectively execute their trading and hedging activities. The proposed increases will allow market participants to more fully implement hedging strategies in related derivative products and to further use options to achieve investment strategies (*e.g.,* there are Exchange-Traded Products (''ETPs'') that use options on the Underlying ETFs as part of their investment strategy, and the applicable position limits (and corresponding exercise limits) as they stand today may inhibit these ETPs in achieving their investment objectives, to the detriment of investors). Also, increasing the applicable position limits may allow Market Makers to provide the markets for these options with more liquidity in amounts commensurate with increased consumer demand in such markets. The proposed position limit increases may also encourage other liquidity providers to shift liquidity, as well as encourage consumers to shift demand, from OTC markets onto the Exchange, which will enhance the process of price discovery conducted on the Exchange through increased order flow.

In addition, the Exchange believes that the structure of the Underlying ETFs, the considerable market capitalization of the funds, underlying component securities, and the liquidity of the markets for the applicable options and underlying component securities will mitigate concerns regarding potential manipulation of the products and/or disruption of the underlying markets upon increasing the relevant position limits. As a general principle, increases in market capitalizations, active trading volume, and deep liquidity of securities do not lead to manipulation and/or disruption. This general principle applies to the recently observed increased levels of market capitalization, trading volume, and liquidity in shares of the Underlying ETFs, and the components of the Underlying ETFs (as described above), the Exchange does not believe that the options markets or underlying markets would become susceptible to manipulation and/or disruption as a result of the proposed position limit increases. Indeed, the Commission has previously expressed the belief that removing position and exercise limits may bring additional depth and liquidity to the options markets without increasing concerns regarding intermarket manipulation or disruption of the options or the underlying securities.[34]

Further, the Exchange notes that the proposed rule change to increase position limits for select actively traded options, is not novel and has been previously approved by the Commission. The proposed increase to the position and exercise limits on the Underlying ETFs has recently been approved by the Commission.[35] The Commission has also previously approved, on a pilot basis, eliminating position limits for options on SPY.[36] Additionally, the Commission has approved similar proposed rule changes by the Exchange to increase position limits for options on highly liquid, actively traded ETFs.[37] In approving the permanent elimination of position (and exercise limits) for such options, the Commission relied heavily upon the exchange's surveillance capabilities, expressing trust in the enhanced surveillances and reporting safeguards that the exchange took in order to detect and deter possible manipulative behavior which might arise from eliminating position and exercise limits.

Furthermore, the Exchange again notes that that the proposed position limits for options on EFA and FXI are consistent with existing position limits for options on IWM and EEM, and the proposed limits for options on XLF and HYG are consistent with current position limits for options on EWZ, TLT, and EWJ.

The Exchange's surveillance and reporting safeguards continue to be designed to deter and detect possible manipulative behavior that might arise from increasing or eliminating position and exercise limits in certain classes. The Exchange believes that the current financial requirements imposed by the Exchange and by the Commission adequately address concerns regarding potentially large, unhedged position in the options on the Underlying ETFs, further promoting just and equitable principles of trading, the maintenance of a fair and orderly market, and the protection of investors.

Finally, the Exchange believes the proposed technical changes to the names and symbols of certain ETFs in both tables in Interpretations and Policies .01 to Exchange Rules 307 and 309 promotes just and equitable principles of trade and remove impediments to and perfect the mechanism of a free and open market and a national market system because the proposed changes make clarifying edits to the names and symbols for certain ETFs to provide uniformity throughout the Exchange's rules. The Exchange believes that these proposed changes will provide greater clarity to Members and the public regarding the Exchange's rules and that it is in the public interest for rules to be accurate and concise so as to eliminate the potential for confusion.

B. Self-Regulatory Organization's Statement on Burden on Competition

The Exchange does not believe that the proposed rule change will impose any burden on competition that is not necessary or appropriate in furtherance of the purposes of the Act. The Exchange does not believe the proposed rule change will impose any burden on intramarket competition that is not necessary or appropriate in furtherance of the purposes of the Act because the increased position limits (and exercise limits) will be available to all market participants and apply to each in the same manner. The Exchange believes that the proposed rule change will provide additional opportunities for market participants to more efficiently achieve their investment and trading objectives of market participants.

The Exchange does not believe that the proposed rule change will impose any burden on intermarket competition that is not necessary or appropriate in furtherance of the Act. On the contrary, the Exchange believes the proposal promotes competition because it may attract additional order flow from the OTC market to exchanges, which would in turn compete amongst each other for those orders.[38] The Exchange believes market participants would benefit from being able to trade options with increased position limits in an exchange environment in several ways, including but not limited to the following: (1) Enhanced efficiency in initiating and closing out position; (2) increased market transparency; and (3) heightened contra-party creditworthiness due to the role of OCC as issuer and guarantor. The Exchange understands that other options exchanges intend to file similar proposed rule changes with the Commission to increase position limits on options on the Underlying ETFs.

[34] *See* Securities Exchange Act Release No. 62147 (October 28, 2005) (SR–CBOE–2005–41), at 62149.

[35] *See supra* note 3.

[36] *See supra* notes 7 and 8.

[37] *See supra* note 18.

[38] Additionally, several other options exchange have the same position limits as the Exchange, as they incorporate by reference to the Exchange's position limits, and as a result the position limits for options on the Underlying ETFs will increase at those exchanges. For example, Nasdaq Options position limits are determined by the position limits established by the Exchange. *See* Nasdaq Stock Market LLC Rules, Options 9, Sec. 13 (Position Limits).

This may further contribute to fair competition among exchanges for multiply listed options.

The proposed changes to the names and symbols of certain ETFs will have no impact on competition as they are not designed to address any competitive issues but rather are designed to remedy minor non-substantive issues and provide added clarity to the rule text of Exchange Rules 307 and 309. In addition, the Exchange does not believe the proposal will impose any burden on inter-market competition as the proposal does not address any competitive issues and is intended to protect investors by providing further clarity regarding the Exchange's rules.

C. Self-Regulatory Organization's Statement on Comments on the Proposed Rule Change Received From Members, Participants, or Others

Written comments were neither solicited nor received.

III. Date of Effectiveness of the Proposed Rule Change and Timing for Commission Action

Because the foregoing proposed rule change does not: (i) Significantly affect the protection of investors or the public interest; (ii) impose any significant burden on competition; and (iii) become operative for 30 days from the date on which it was filed, or such shorter time as the Commission may designate, it has become effective pursuant to Section 19(b)(3)(A) of the Act [39] and Rule 19b–4(f)(6) thereunder.[40]

A proposed rule change filed pursuant to Rule 19b–4(f)(6) under the Act [41] normally does not become operative for 30 days after the date of its filing. However, Rule 19b–4(f)(6)(iii) [42] permits the Commission to designate a shorter time if such action is consistent with the protection of investors and the public interest. The Exchange has asked the Commission to waive the 30-day operative delay so that the proposed rule change may become operative upon filing. The Exchange states that waiver of the operative delay would be consistent with the protection of investors and the public interest because it would allow the Exchange to immediately increase its position and exercise limits for the products subject to this proposal to those of Cboe, which the Exchange believes will ensure fair competition among exchanges and provide consistency and uniformity among members of both Cboe and MIAX by subjecting members of both exchanges to the same position and exercise limits for these multiply-listed options classes. For this reason, the Commission believes that waiver of the 30-day operative delay is consistent with the protection of investors and the public interest. Therefore, the Commission hereby waives the operative delay and designates the proposal as operative upon filing.[43]

At any time within 60 days of the filing of the proposed rule change, the Commission summarily may temporarily suspend such rule change if it appears to the Commission that such action is necessary or appropriate in the public interest, for the protection of investors, or otherwise in furtherance of the purposes of the Act. If the Commission takes such action, the Commission shall institute proceedings to determine whether the proposed rule change should be approved or disapproved.

IV. Solicitation of Comments

Interested persons are invited to submit written data, views, and arguments concerning the foregoing, including whether the proposed rule change is consistent with the Act. Comments may be submitted by any of the following methods:

Electronic Comments

- Use the Commission's internet comment form (*http://www.sec.gov/rules/sro.shtml*); or
- Send an email to *rule-comments@sec.gov.* Please include File Number SR–MIAX–2020–10 on the subject line.

Paper Comments

- Send paper comments in triplicate to Secretary, Securities and Exchange Commission, 100 F Street NE, Washington, DC 20549–1090.

All submissions should refer to File Number SR–MIAX–2020–10. This file number should be included on the subject line if email is used. To help the Commission process and review your comments more efficiently, please use only one method. The Commission will post all comments on the Commission's internet website (*http://www.sec.gov/rules/sro.shtml*). Copies of the submission, all subsequent amendments, all written statements with respect to the proposed rule change that are filed with the Commission, and all written communications relating to the proposed rule change between the Commission and any person, other than those that may be withheld from the public in accordance with the provisions of 5 U.S.C. 552, will be available for website viewing and printing in the Commission's Public Reference Room, 100 F Street NE, Washington, DC 20549 on official business days between the hours of 10:00 a.m. and 3:00 p.m. Copies of such filing also will be available for inspection and copying at the principal office of the Exchange. All comments received will be posted without change. Persons submitting comments are cautioned that we do not redact or edit personal identifying information from comment submissions. You should submit only information that you wish to make available publicly. All submissions should refer to File Number SR–MIAX–2020–10, and should be submitted on or before June 12, 2020.

For the Commission, by the Division of Trading and Markets, pursuant to delegated authority.[44]

J. Matthew DeLesDernier,

Assistant Secretary.

[FR Doc. 2020–11040 Filed 5–21–20; 8:45 am]

BILLING CODE 8011–01–P

[39] 15 U.S.C. 78s(b)(3)(A).

[40] 17 CFR 240.19b–4(f)(6). In addition, Rule 19b–4(f)(6)(iii) requires a self-regulatory organization to give the Commission written notice of its intent to file the proposed rule change, along with a brief description and text of the proposed rule change, at least five business days prior to the date of filing of the proposed rule change, or such shorter time as designated by the Commission. The Exchange has satisfied this requirement.

[41] 17 CFR 240.19b–4(f)(6).

[42] 17 CFR 240.19b–4(f)(6)(iii).

[43] For purposes only of waiving the 30-day operative delay, the Commission also has considered the proposed rule's impact on efficiency, competition, and capital formation. *See* 15 U.S.C. 78c(f).

[44] 17 CFR 200.30–3(a)(12).

SECURITIES AND EXCHANGE COMMISSION

[Release No. IA–5504]

Intention To Cancel Registration Pursuant to Section 203(H) of the Investment Advisers Act of 1940

May 18, 2020.

Notice is given that the Securities and Exchange Commission (the ''Commission'') intends to issue an order, pursuant to Section 203(h) of the Investment Advisers Act of 1940 (the ''Act''), cancelling the registration of Strategic Options, LLC [File No. 801–106576], hereinafter referred to as the ''*registrant.*''

Section 203(h) provides, in pertinent part, that if the Commission finds that any person registered under Section 203, or who has pending an application for registration filed under that section, is no longer in existence, is not engaged in business as an investment adviser, or is prohibited from registering as an

investment adviser under section 203A, the Commission shall by order, cancel the registration of such person.

The registrant indicated on its initial and its most recent Form ADV filings that it is relying on rule 203A–2(e) to register with the Commission, which provides an exemption from the prohibition on registration for an adviser that provides investment advice to all of its clients exclusively through the adviser's interactive website, except that the adviser may advise fewer than 15 clients through other means during the preceding 12 months.[1] The Commission believes, based on the facts it has, that the registrant did not at the time of the Form ADV filings and thereafter, advise clients through an interactive website as defined under the rule,[2] and that it is therefore prohibited from registering as an investment adviser under section 203A of the Act. Accordingly, the Commission believes that reasonable grounds exist for a finding that this registrant is no longer eligible to be registered with the Commission as an investment adviser and that the registration should be cancelled pursuant to section 203(h) of the Act.

Notice is also given that any interested person may, by June 12, 2020, at 5:30 p.m., submit to the Commission in writing a request for a hearing on the cancellation, accompanied by a statement as to the nature of his or her interest, the reason for such request, and the issues, if any, of fact or law proposed to be controverted, and he or she may request that he or she be notified if the Commission should order a hearing thereon. Any such communication should be emailed to the Commission's Secretary at *Secretarys-Office@sec.gov.*

At any time after June 12, 2020, the Commission may issue an order cancelling the registration, upon the basis of the information stated above, unless an order for a hearing on the cancellation shall be issued upon request or upon the Commission's own motion. Persons who requested a hearing, or who requested to be advised as to whether a hearing is ordered, will receive any notices and orders issued in this matter, including the date of the hearing (if ordered) and any postponements thereof. Any adviser whose registration is cancelled under delegated authority may appeal that decision directly to the Commission in accordance with rules 430 and 431 of the Commission's rules of practice (17 CFR 201.430 and 431).

ADDRESSES: The Commission: *Secretarys-Office@sec.gov.*

FOR FURTHER INFORMATION CONTACT: Juliet Han, Senior Counsel at 202–551–6999; SEC, Division of Investment Management, Investment Adviser Regulation Office, 100 F Street NE, Washington, DC 20549–8549.

For the Commission, by the Division of Investment Management, pursuant to delegated authority.[3]

J. Matthew DeLesDernier,

Assistant Secretary.

[FR Doc. 2020–11031 Filed 5–21–20; 8:45 am]

BILLING CODE 8011–01–P

[1] Section 203A of the Act generally prohibits an investment adviser from registering with the Commission unless it meets certain requirements. Rule 203A–2 provides exemptions from the prohibition on Commission registration in section 203A of the Act. Rule 203A–2(e) exempts from the prohibition on Commission registration certain investment advisers that provide advisory services through the internet, as described above. *See Exemption for Certain Investment Advisers Operating Through the Internet,* Investment Advisers Act Release No. 2091 (December 12, 2002), *available at https://www.sec.gov/rules/final/ia-2091.htm* (''Internet Adviser Exemption Adopting Release''). Effective September 19, 2011, rule 203A–2(f) was renumbered as rule 203A–2(e). *See Rules Implementing Amendments to the Investment Advisers Act of 1940,* Investment Advisers Act Release No. 3221 (June 22, 2011), *available at http://www.sec.gov/rules/final/2011/ia-3221.pdf.*

[2] Rule 203A–2(e) defines ''interactive website'' as a website in which computer software-based models or applications provide investment advice to clients based on personal information provided by each client through the website. An adviser relying on the exemption may not use its advisory personnel to elaborate or expand upon the investment advice provided by its interactive website, or otherwise provide investment advice to its internet clients, except as permitted by the rule's de minimis exception. Such exception permits an adviser relying on the rule to advise clients through means other than its interactive website, so long as the adviser had fewer than 15 of these non-internet clients during the preceding 12 months. *See* internet Adviser Exemption Adopting Release, *id.*

[3] 17 CFR 200.30–5(e)(2).

SECURITIES AND EXCHANGE COMMISSION

[Release No. 34–88898; File No. SR–CboeBZX–2020–040]

Self-Regulatory Organizations; Cboe BZX Exchange, Inc.; Notice of Filing and Immediate Effectiveness of a Proposed Rule Change To Amend Certain Rules in Connection With the Exchange's Disciplinary Process

May 18, 2020.

Pursuant to Section 19(b)(1) of the Securities Exchange Act of 1934 (''Act''),[1] and Rule 19b–4 thereunder,[2] notice is hereby given that on May 8, 2020, Cboe BZX Exchange, Inc. (the ''Exchange'' or ''BZX'') filed with the Securities and Exchange Commission (the ''Commission'') the proposed rule change as described in Items I and II below, which Items have been prepared by the Exchange. The Exchange filed the proposal as a ''non-controversial'' proposed rule change pursuant to Section 19(b)(3)(A)(iii) of the Act[3] and Rule 19b–4(f)(6) thereunder.[4] The Commission is publishing this notice to solicit comments on the proposed rule change from interested persons.

I. Self-Regulatory Organization's Statement of the Terms of Substance of the Proposed Rule Change

Cboe BZX Exchange, Inc. (the ''Exchange'' or ''BZX'') proposes to amend certain rules in connection with the Exchange's disciplinary process. The text of the proposed rule change is provided in Exhibit 5.

The text of the proposed rule change is also available on the Exchange's website (*http://markets.cboe.com/us/equities/regulation/rule_filings/bzx/*), at the Exchange's Office of the Secretary, and at the Commission's Public Reference Room.

II. Self-Regulatory Organization's Statement of the Purpose of, and Statutory Basis for, the Proposed Rule Change

In its filing with the Commission, the Exchange included statements concerning the purpose of and basis for the proposed rule change and discussed any comments it received on the proposed rule change. The text of these statements may be examined at the places specified in Item IV below. The Exchange has prepared summaries, set forth in sections A, B, and C below, of the most significant aspects of such statements.

A. Self-Regulatory Organization's Statement of the Purpose of, and Statutory Basis for, the Proposed Rule Change

1. Purpose

The Exchange proposes to amend Rule 8.8 in connection with the timing before which an offer of settlement becomes final, to amend Rule 8.10 in connection with the Board's review of offers of settlement, and to amend Rule 8.11 to be consistent with the corresponding rules of the Exchange's affiliated exchanges, Cboe Exchange, Inc. (''Cboe Options'') and Cboe C2 Exchange, Inc. (''C2'').[5]

[1] 15 U.S.C. 78s(b)(1).

[2] 17 CFR 240.19b–4.

[3] 15 U.S.C. 78s(b)(3)(A)(iii).

[4] 17 CFR 240.19b–4(f)(6).

[5] *See* Cboe Options Rule 13.11. The Exchange notes that C2 incorporates Cboe Options Disciplinary rules by reference.

First, the Exchange proposes to amend Rule 8.8 which governs offers of settlement during a disciplinary proceeding pursuant to Chapter 8 (Discipline). Specifically, it proposes to amend the timing for which the Chief Regulatory Officer's (''CRO'') decision regarding an offer shall become final pursuant to Rule 8.8(a). Rule 8.8(a) currently provides that a Respondent may submit to the CRO a written offer of settlement, and the CRO may accept an offer of settlement, and, in doing so, issues a decision, including findings and conclusions and imposing a penalty, consistent with the terms of such offer. Pursuant to Rule 8.8(a), the CRO may also reject an offer of settlement and the matter then proceeds as if such offer had not been made. According to Rule 8.8(a), a decision of the CRO issued upon acceptance of an offer of settlement as well as the determination of the CRO whether to accept or reject such an offer does not currently become final until 20 business days after such decision is issued, and the Respondent may not seek review thereof.

The Exchange proposes to eliminate the 20-business day timeframe before which the CRO's determination and decision in connection with an offer of settlement becomes final. This is consistent with the corresponding offer of settlement rules of the Exchange's affiliated exchanges, Cboe Options and C2,[6] which do not have any such waiting period before which the CRO's acceptance (and accompanying decision) or rejection of an offer of settlement becomes final. In addition to providing consistency between the rules of the affiliated exchanges, the proposed rule change also removes a process that unnecessarily prolongs disciplinary proceedings. Where a matter could be either immediately closed or continued to the next steps of the proceedings upon the CRO's acceptance or rejection, respectively, of an offer of settlement, the current process unnecessarily leaves a matter open.

Second, and in line with the proposed rule change to Rule 8.8, the Exchange also proposes to remove Rule 8.8 offers of settlement from the list of certain procedural decisions in Rule 8.10 that may be reviewed by the Board on its own initiative within 20 business days after the issuance of the decision. This is also consistent with the corresponding disciplinary review rules of Cboe Options and C2, which do not include offers of settlement as decisions that the Board may review on its own initiative.[7] The Exchange notes that the Board has not previously initiated a review of an offer of settlement. Therefore, the Exchange believes maintaining a 20-business day waiting period for a review that is not invoked is unnecessary and merely exhausts additional Exchange and Member resources in the time that a matter could have been resolved or have continued through proceedings. Allowing the CRO to accept or reject offers of settlement with finality will significantly expedite the settlement process while ensuring that the independence and integrity of the regulatory process is maintained, as the CRO's regulatory decision-making responsibilities are entirely separate from those responsible for the Exchange's business interests.

Finally, the Exchange proposes to amend Rule 8.11 to incorporate the Principal Considerations in Determining Sanctions (''Principal Considerations'') into proposed Rule 8.11(c), which are currently in corresponding Rule 13.11.01 of Cboe Options and C2, and the general provision regarding sanctions into proposed Rule 8.11(a), which are currently in corresponding Rule 13.11(a) of Cboe Options and C2, in order to promote consistency and uniformity across the affiliated exchanges in determining appropriate remedial sanctions.[8] Particularly, the proposed rule change incorporates the general authority of the CRO, Hearing Panel, and committee of the Board[9] to determine and apply sanctions, consistent with Cboe Options and C2 Rule 13.11(a), into proposed Rule 8.11(a), which provides that Members and persons associated with Members shall (subject to any rule or order of the Securities and Exchange Commission) be appropriately disciplined by the CRO, Hearing Panel, or the committee of the Board, as applicable, for violations under these Rules by expulsion, suspension, limitation of activities, functions and operations, fine, censure, being suspended or barred from being associated with a Member, suspension or revocation of membership, or any other fitting sanction. This authority is already enumerated in Rule 8.1, however, the proposed provision provides consistency with the rules of the Exchange's affiliated options exchanges.[10] As proposed in Rule 8.11(c), the Principal Considerations promote consistency and uniformity in the imposition of penalties, and should be considered in connection with the imposition of sanctions in all cases in determining appropriate remedial sanctions through the resolution of disciplinary matters through offers of settlement or after formal disciplinary hearings. The Principal Considerations include the following:

(1) Disciplinary sanctions are remedial in nature. The CRO, Hearing Panel or committee of the Board[11], as applicable, should design sanctions to prevent and deter future misconduct by wrongdoers, to discourage others from engaging in similar misconduct, and to improve overall business standards of Exchange Members. Pursuant to this Rule 8.11, the CRO, Hearing Panel or committee of the Board, as applicable, may impose sanctions including expulsion, suspension, limitation of activities, fine, censure, suspension or revocation of one or more Members, or any other fitting sanction.

(2) An important objective of the disciplinary process is to deter future misconduct by imposing progressively escalating sanctions on recidivists. The CRO, Hearing Panel or committee of the Board, as applicable, should consider a party's relevant disciplinary history in determining sanctions.

(3) The CRO, Hearing Panel or committee of the Board, as applicable, should consider prior similar disciplinary decisions (relevant precedent) in determining an appropriate sanction and may consider relevant precedent from other self-regulatory organizations.

(4) The CRO, Hearing Panel or committee of the Board, as applicable, should tailor sanctions to address the misconduct at issue. The CRO, Hearing Panel or committee of the Board, as applicable, should impose sanctions tailored to the misconduct at issue. For example, the CRO, Hearing Panel or

[6] *See* Cboe Options Rule 13.8(a). The Exchange notes that C2 incorporates Cboe Options Disciplinary rules by reference.

[7] *See* Cboe Options Rule 13.10(c).

[8] The Exchange notes that its other affiliated exchanges, Cboe BZX Exchange, Inc. (''BZX''), Cboe EDGX Exchange, Inc. (''EDGX''), and Cboe BYX Exchange, Inc. (''BYX''), also intend to incorporate these portions of Cboe Options and C2 Rule 13.11 into their Rule 8.11.

[9] The Exchange notes that it maintains the inclusion of committee of the Board (along with the CRO and Hearing Panel) in connection with the imposition of sanctions throughout proposed Rules 8.11(a) and (c), which is currently a difference in text between Cboe Options and C2 Rule 13.11 and current Rule 8.11 and maintains consistency throughout current Rule 8.11.

[10] The proposed change also amends the current language under Rule 8.11 to be provided in paragraph (b), with a heading that reads ''Effective Date of Judgment'', which is consistent with the corresponding heading in Cboe Options and C2 Rule 13.11. No changes are made to the current language. It also adds in the same header language for Rule 8.11 (''Judgment and Sanction'') as that of Cboe Options and C2 Rule 13.11.

[11] *See supra* note 9. The committee of the Board would, thus, also apply the Principal Considerations to any determinations made during a review related to sanctions.

committee of the Board, as applicable, may require a Member [12] to, among other things: retain a qualified independent consultant to improve future compliance with regulatory requirements; disclose disciplinary history to new and/or existing clients; implement heightened supervision of certain employees; or requalify by examination in any or all registered capacities.

(5) Aggregation of violations may be appropriate in certain instances for purposes of determining sanctions. The CRO, Hearing Panel or committee of the Board, as applicable, may aggregate individual violations of particular rules and treat such violations as a single offense for purposes of determining sanctions. Aggregation may be appropriate when the Exchange utilizes a comprehensive surveillance program in the detection of potential rules violations. Aggregation may also be appropriate where the Exchange has reviewed activity over an extensive time period during the course of an investigation of matters disclosed either through a routine examination of the Member or as the result of a complaint. Similarly, where no exceptional circumstances are present, the Exchange may impose a fine based upon a determination that there exists a pattern or practice of violative conduct. The Exchange also may aggregate similar violations generally if the conduct was unintentional, there was no injury to public investors, or the violations resulted from a single systemic problem or cause that has been corrected.

(6) The CRO, Hearing Panel or committee of the Board, as applicable, should evaluate appropriateness of disgorgement and/or restitution. The CRO, Hearing Panel or committee of the Board, as applicable, should evaluate the appropriateness of disgorgement and/or restitution in those cases where the amount of harm is quantifiable and the harmed party is identifiable.

(7) The CRO, Hearing Panel or committee of the Board, as applicable, should consider contributions or settlements by a respondent or any related Member to the harmed party as it relates to the conduct that is the subject of the disciplinary matter.

(8) The CRO, Hearing Panel or committee of the Board, as applicable, may consider a party's inability to pay in connection with the imposition of monetary sanctions.

The Exchange notes that the CRO, Hearing Panel or committee of the Board, as applicable, already consider the above proposed Principal Considerations when determining appropriate remedial sanctions throughout the resolution of disciplinary matters. However, the Exchange now proposes to codify such considerations in order to ensure that the CRO, Hearing Panel or committee of the Board, as applicable, consider aggravating and/or mitigating factors in the same manner across each disciplinary matter which will, in turn, provide for consistency, fairness and that the most appropriate disciplinary measure is implemented during proceedings.

The Exchange intends to announce the operative date of the updates to Rules 8.8, 8.10, and 8.11 at least 30 days in advance via a regulatory notice. To facilitate an orderly transition from the current rules to the proposed rules, the Exchange proposes to apply the current rules to all matters where a subject has received notice pursuant to Rule 8.2(d) prior to the operative date. As a consequence of this transition process, the Exchange will retain the existing processes during the transition period until such time that there are no longer any matters proceeding under the current rules. To facilitate this transition process, the Exchange will retain a transitional Chapter 8 that will contain the Exchange's rules, as they are at the time this proposal is filed with the Commission. This transitional Chapter 8 will apply only to matters initiated prior to the operational date of the changes proposed herein and it will be posted to the Exchange's public rules website. When the transition is complete and there are no longer any Members or associated persons subject to current Chapter 8, the Exchange will remove the transitional Chapter 8 from its public rules website.

2. Statutory Basis

The Exchange believes the proposed rule change is consistent with the Securities Exchange Act of 1934 (the ''Act'') and the rules and regulations thereunder applicable to the Exchange and, in particular, the requirements of Section 6(b) of the Act.[13] Specifically, the Exchange believes the proposed rule change is consistent with the Section 6(b)(5) [14] requirements that the rules of an exchange be designed to prevent fraudulent and manipulative acts and practices, to promote just and equitable principles of trade, to foster cooperation and coordination with persons engaged in regulating, clearing, settling, processing information with respect to, and facilitating transactions in securities, to remove impediments to and perfect the mechanism of a free and open market and a national market system, and, in general, to protect investors and the public interest. Additionally, the Exchange believes the proposed rule change is consistent with the Section 6(b)(5) [15] requirement that the rules of an exchange not be designed to permit unfair discrimination between customers, issuers, brokers, or dealers.

In particular, the proposed rule changes are designed to be consistent with the corresponding rules of its affiliated exchanges,[16] which have been previously filed with the Commission. The Exchange believes that by providing consistent disciplinary rules across the affiliated exchanges the proposed rule change would foster cooperation and coordination with persons engaged in facilitating transactions in securities and would remove impediments to and perfect the mechanism of a free and open market and a national market system by increasing the understanding of the Exchange's disciplinary process for Members that participate across the affiliated exchanges, as well as result in greater uniformity, and less burdensome and more efficient regulatory processes. Moreover, the Exchange believes that removing an unnecessary waiting period in the disciplinary process, as well as a review provision that is not used, would serve to expedite the outcome of a matter or the progression of a matter through the next steps in the process, thereby protecting investors and the public interest by conserving Exchange and Member resources. The proposed rule change to remove the waiting period before an offer of settlement becomes final and the Board's initiative to review such will provide for a more efficient, streamlined disciplinary process as a matter would then be either immediately closed or continued to the next steps of the proceedings upon the CRO's acceptance or rejection, respectively, of an offer of settlement. Additionally, and as stated above, the CRO's regulatory decision-making responsibilities are entirely separate from those responsible for the Exchange's business interests, therefore, allowing the CRO to accept or reject offers of settlement with finality will significantly expedite the settlement process while ensuring that the

[12] The Exchange notes that, to the extent Cboe Options and C2 Rule 13.11.01 state ''TPH and TPH organization'', the Exchange uses the term ''Member'', which, pursuant to its definition in Rule 1.5(n), covers the same scope of exchange membership as the aforementioned language in Cboe Options and C2 Rule 13.11.01.

[13] 15 U.S.C. 78f(b).

[14] 15 U.S.C. 78f(b)(5).

[15] *Id.*

[16] *See supra* note 5.

independence and integrity of the regulatory process is maintained. In light of these proposed changes, the Exchange notes that the proposed addition of the Principal Considerations will ensure that the CRO determines each offer of settlement using the same set of fair standards and factors, thereby protecting investors and the public interest throughout the disciplinary process.

In addition to this, the Exchange also believes that the proposed rule in consistent with Section 6(b)(6) of the Act,[17] which requires the rules of an exchange provide that its members be appropriately disciplined for violations of the Act as well as the rules and regulations thereunder, or the rules of the Exchange, by expulsion, suspension, limitation of activities, functions, and operations, fine, censure, being suspended or barred from being associated with a member, or any other fitting sanction, as well as Section 6(b)(7) of the Act,[18] in that it provides fair procedures for the disciplining of Members and persons associated with Members, the denial of Member status to any person seeking Membership therein, the barring of any person from becoming associated with a Member thereof, and the prohibition or limitation by the Exchange of any person with respect to access to services offered by the Exchange or a Member thereof. Specifically, the proposed rule change to incorporate Principal Considerations that the CRO, Hearing Panel or committee of the Board, as applicable, may take into consideration when determining disciplinary sanctions will ensure that the Exchange implements the most appropriate disciplinary mechanisms for violations and a fair process in determining such.

Finally, the Exchange believes that its proposed transition plan would allow for a more orderly and less burdensome transition for the Exchange's Members. The proposed application of current rules to all matters where a subject has received notice pursuant to Rule 8.2(d) prior to the operative date provides a clear demarcation between matters that would proceed under the new rules and those that would be completed under the current rules.

B. Self-Regulatory Organization's Statement on Burden on Competition

The Exchange does not believe that the proposed rule change would impose any burden on competition that is not necessary or appropriate in furtherance of the purposes of the Act. The proposed rule changes are not intended to address competitive issues, but rather, are concerned with facilitating less burdensome regulatory compliance and processes and enhancing the quality of the regulatory processes. The Exchange believes the proposed rule changes would reduce the burdens within the disciplinary process, as well as move matters through the process expeditiously by providing for more efficient finality of offers of settlement, to the benefit of all Members. Moreover, the proposed Principal Considerations will apply to all remedial sanctions throughout the disciplinary process in the same manner, thereby equally benefitting all Members by providing for fair and consistent disciplinary determinations. Additionally, the proposed rule changes are consistent with the rules of the Exchange's affiliates, Cboe Options and C2, which have been previously filed with the Commission.[19]

C. Self-Regulatory Organization's Statement on Comments on the Proposed Rule Change Received From Members, Participants, or Others

The Exchange neither solicited nor received comments on the proposed rule change.

III. Date of Effectiveness of the Proposed Rule Change and Timing for Commission Action

Because the foregoing proposed rule change does not: (i) Significantly affect the protection of investors or the public interest; (ii) impose any significant burden on competition; and (iii) become operative for 30 days from the date on which it was filed, or such shorter time as the Commission may designate, it has become effective pursuant to Section 19(b)(3)(A) of the Act[20] and Rule 19b–4(f)(6) thereunder.[21]

At any time within 60 days of the filing of the proposed rule change, the Commission summarily may temporarily suspend such rule change if it appears to the Commission that such action is necessary or appropriate in the public interest, for the protection of investors, or otherwise in furtherance of the purposes of the Act. If the Commission takes such action, the Commission shall institute proceedings to determine whether the proposed rule change should be approved or disapproved.

IV. Solicitation of Comments

Interested persons are invited to submit written data, views, and arguments concerning the foregoing, including whether the proposed rule change is consistent with the Act. Comments may be submitted by any of the following methods:

Electronic Comments

- Use the Commission's internet comment form (*http://www.sec.gov/rules/sro.shtml);* or
- Send an email to *rule-comments@sec.gov. Please include File Number SR–CboeBZX–2020–040 on the subject line.*

Paper Comments

- Send paper comments in triplicate to Secretary, Securities and Exchange Commission, 100 F Street NE, Washington, DC 20549–1090.

All submissions should refer to File Number SR–CboeBZX–20*20–040.* This file number should be included on the subject line if email is used. To help the Commission process and review your comments more efficiently, please use only one method. The Commission will post all comments on the Commission's internet website (*http://www.sec.gov/rules/sro.shtml).* Copies of the submission, all subsequent amendments, all written statements with respect to the proposed rule change that are filed with the Commission, and all written communications relating to the proposed rule change between the Commission and any person, other than those that may be withheld from the public in accordance with the provisions of 5 U.S.C. 552, will be available for website viewing and printing in the Commission's Public Reference Room, 100 F Street NE, Washington, DC 20549, on official business days between the hours of 10:00 a.m. and 3:00 p.m. Copies of the filing also will be available for inspection and copying at the principal office of the Exchange. All comments received will be posted without change. Persons submitting comments are cautioned that we do not redact or edit personal identifying information from comment submissions. You should submit only information that you wish to make available publicly. All submissions should refer to File Number SR–CboeBZX–2020–040 and should be submitted on or before June 12, 2020.

[17] 15 U.S.C. 78f(b)(6).

[18] 15 U.S.C. 78f(b)(6).

[19] *See* Cboe Options Rules 13.8, 13.10(c), 13.11(a), and 13.11.01.

[20] 15 U.S.C. 78s(b)(3)(A).

[21] 17 CFR 240.19b–4(f)(6). In addition, Rule 19b–4(f)(6)(iii) requires a self-regulatory organization to give the Commission written notice of its intent to file the proposed rule change, along with a brief description and text of the proposed rule change, at least five business days prior to the date of filing of the proposed rule change, or such shorter time as designated by the Commission. The Exchange has satisfied this requirement.

For the Commission, by the Division of Trading and Markets, pursuant to delegated authority.[22]

J. Matthew DeLesDernier,

Assistant Secretary.

[FR Doc. 2020–11042 Filed 5–21–20; 8:45 am]

BILLING CODE 8011–01–P

SECURITIES AND EXCHANGE COMMISSION

[Release No. 34–88899; File No. SR–CboeEDGA–2020–014]

Self-Regulatory Organizations; Cboe EDGA Exchange, Inc.; Notice of Filing and Immediate Effectiveness of a Proposed Rule Change To Amend Certain Rules in Connection With the Exchange's Disciplinary Process

May 18, 2020.

Pursuant to Section 19(b)(1) of the Securities Exchange Act of 1934 (''Act''),[1] and Rule 19b–4 thereunder,[2] notice is hereby given that on May 8, 2020, Cboe EDGA Exchange, Inc. (the ''Exchange'' or ''EDGA'') filed with the Securities and Exchange Commission (the ''Commission'') the proposed rule change as described in Items I and II below, which Items have been prepared by the Exchange. The Exchange filed the proposal as a ''non-controversial'' proposed rule change pursuant to Section 19(b)(3)(A)(iii) of the Act[3] and Rule 19b–4(f)(6) thereunder.[4] The Commission is publishing this notice to solicit comments on the proposed rule change from interested persons.

I. Self-Regulatory Organization's Statement of the Terms of Substance of the Proposed Rule Change

Cboe EDGA Exchange, Inc. (the ''Exchange'' or ''EDGA'') proposes to amend certain rules in connection with the Exchange's disciplinary process. The text of the proposed rule change is provided in Exhibit 5.

The text of the proposed rule change is also available on the Exchange's website (*http://markets.cboe.com/us/equities/regulation/rule_filings/edga/*), at the Exchange's Office of the Secretary, and at the Commission's Public Reference Room.

II. Self-Regulatory Organization's Statement of the Purpose of, and Statutory Basis for, the Proposed Rule Change

In its filing with the Commission, the Exchange included statements concerning the purpose of and basis for the proposed rule change and discussed any comments it received on the proposed rule change. The text of these statements may be examined at the places specified in Item IV below. The Exchange has prepared summaries, set forth in sections A, B, and C below, of the most significant aspects of such statements.

A. Self-Regulatory Organization's Statement of the Purpose of, and Statutory Basis for, the Proposed Rule Change

1. Purpose

The Exchange proposes to amend Rule 8.8 in connection with the timing before which an offer of settlement becomes final, to amend Rule 8.10 in connection with the Board's review of offers of settlement, and to amend Rule 8.11 to be consistent with the corresponding rules of the Exchange's affiliated exchanges, Cboe Exchange, Inc. (''Cboe Options'') and Cboe C2 Exchange, Inc. (''C2'').[5]

First, the Exchange proposes to amend Rule 8.8 which governs offers of settlement during a disciplinary proceeding pursuant to Chapter 8 (Discipline). Specifically, it proposes to amend the timing for which the Chief Regulatory Officer's (''CRO'') decision regarding an offer shall become final pursuant to Rule 8.8(a). Rule 8.8(a) currently provides that a Respondent may submit to the CRO a written offer of settlement, and the CRO may accept an offer of settlement, and, in doing so, issues a decision, including findings and conclusions and imposing a penalty, consistent with the terms of such offer. Pursuant to Rule 8.8(a), the CRO may also reject an offer of settlement and the matter then proceeds as if such offer had not been made. According to Rule 8.8(a), a decision of the CRO issued upon acceptance of an offer of settlement as well as the determination of the CRO whether to accept or reject such an offer does not currently become final until 20 business days after such decision is issued, and the Respondent may not seek review thereof.

The Exchange proposes to eliminate the 20-business day timeframe before which the CRO's determination and decision in connection with an offer of settlement becomes final. This is consistent with the corresponding offer of settlement rules of the Exchange's affiliated exchanges, Cboe Options and C2,[6] which do not have any such waiting period before which the CRO's acceptance (and accompanying decision) or rejection of an offer of settlement becomes final. In addition to providing consistency between the rules of the affiliated exchanges, the proposed rule change also removes a process that unnecessarily prolongs disciplinary proceedings. Where a matter could be either immediately closed or continued to the next steps of the proceedings upon the CRO's acceptance or rejection, respectively, of an offer of settlement, the current process unnecessarily leaves a matter open.

Second, and in line with the proposed rule change to Rule 8.8, the Exchange also proposes to remove Rule 8.8 offers of settlement from the list of certain procedural decisions in Rule 8.10 that may be reviewed by the Board on its own initiative within 20 business days after the issuance of the decision. This is also consistent with the corresponding disciplinary review rules of Cboe Options and C2, which do not include offers of settlement as decisions that the Board may review on its own initiative.[7] The Exchange notes that the Board has not previously initiated a review of an offer of settlement. Therefore, the Exchange believes maintaining a 20-business day waiting period for a review that is not invoked is unnecessary and merely exhausts additional Exchange and Member resources in the time that a matter could have been resolved or have continued through proceedings. Allowing the CRO to accept or reject offers of settlement with finality will significantly expedite the settlement process while ensuring that the independence and integrity of the regulatory process is maintained, as the CRO's regulatory decision-making responsibilities are entirely separate from those responsible for the Exchange's business interests.

Finally, the Exchange proposes to amend Rule 8.11 to incorporate the Principal Considerations in Determining Sanctions (''Principal Considerations'') into proposed Rule 8.11(c), which are currently in corresponding Rule 13.11.01 of Cboe Options and C2, and the general provision regarding sanctions into proposed Rule 8.11(a), which are currently in corresponding Rule 13.11(a) of Cboe Options and C2, in order to promote consistency and uniformity across the affiliated exchanges in determining appropriate

[22] 17 CFR 200.30–3(a)(12).

[1] 15 U.S.C. 78s(b)(1).

[2] 17 CFR 240.19b–4.

[3] 15 U.S.C. 78s(b)(3)(A)(iii).

[4] 17 CFR 240.19b–4(f)(6).

[5] *See* Cboe Options Rule 13.11. The Exchange notes that C2 incorporates Cboe Options Disciplinary rules by reference.

[6] *See* Cboe Options Rule 13.8(a). The Exchange notes that C2 incorporates Cboe Options Disciplinary rules by reference.

[7] *See* Cboe Options Rule 13.10(c).

remedial sanctions.[8] Particularly, the proposed rule change incorporates the general authority of the CRO, Hearing Panel, and committee of the Board[9] to determine and apply sanctions, consistent with Cboe Options and C2 Rule 13.11(a), into proposed Rule 8.11(a), which provides that Members and persons associated with Members shall (subject to any rule or order of the Securities and Exchange Commission) be appropriately disciplined by the CRO, Hearing Panel, or the committee of the Board, as applicable, for violations under these Rules by expulsion, suspension, limitation of activities, functions and operations, fine, censure, being suspended or barred from being associated with a Member, suspension or revocation of membership, or any other fitting sanction. This authority is already enumerated in Rule 8.1, however, the proposed provision provides consistency with the rules of the Exchange's affiliated options exchanges.[10] As proposed in Rule 8.11(c), the Principal Considerations promote consistency and uniformity in the imposition of penalties, and should be considered in connection with the imposition of sanctions in all cases in determining appropriate remedial sanctions through the resolution of disciplinary matters through offers of settlement or after formal disciplinary hearings. The Principal Considerations include the following:

(1) Disciplinary sanctions are remedial in nature. The CRO, Hearing Panel or committee of the Board,[11] as applicable, should design sanctions to prevent and deter future misconduct by wrongdoers, to discourage others from engaging in similar misconduct, and to improve overall business standards of Exchange Members. Pursuant to this Rule 8.11, the CRO, Hearing Panel or committee of the Board, as applicable, may impose sanctions including expulsion, suspension, limitation of activities, fine, censure, suspension or revocation of one or more Members, or any other fitting sanction.

(2) An important objective of the disciplinary process is to deter future misconduct by imposing progressively escalating sanctions on recidivists. The CRO, Hearing Panel or committee of the Board, as applicable, should consider a party's relevant disciplinary history in determining sanctions.

(3) The CRO, Hearing Panel or committee of the Board, as applicable, should consider prior similar disciplinary decisions (relevant precedent) in determining an appropriate sanction and may consider relevant precedent from other self-regulatory organizations.

(4) The CRO, Hearing Panel or committee of the Board, as applicable, should tailor sanctions to address the misconduct at issue. The CRO, Hearing Panel or committee of the Board, as applicable, should impose sanctions tailored to the misconduct at issue. For example, the CRO, Hearing Panel or committee of the Board, as applicable, may require a Member[12] to, among other things: Retain a qualified independent consultant to improve future compliance with regulatory requirements; disclose disciplinary history to new and/or existing clients; implement heightened supervision of certain employees; or requalify by examination in any or all registered capacities.

(5) Aggregation of violations may be appropriate in certain instances for purposes of determining sanctions. The CRO, Hearing Panel or committee of the Board, as applicable, may aggregate individual violations of particular rules and treat such violations as a single offense for purposes of determining sanctions. Aggregation may be appropriate when the Exchange utilizes a comprehensive surveillance program in the detection of potential rules violations. Aggregation may also be appropriate where the Exchange has reviewed activity over an extensive time period during the course of an investigation of matters disclosed either through a routine examination of the Member or as the result of a complaint. Similarly, where no exceptional circumstances are present, the Exchange may impose a fine based upon a determination that there exists a pattern or practice of violative conduct. The Exchange also may aggregate similar violations generally if the conduct was unintentional, there was no injury to public investors, or the violations resulted from a single systemic problem or cause that has been corrected.

(6) The CRO, Hearing Panel or committee of the Board, as applicable, should evaluate appropriateness of disgorgement and/or restitution. The CRO, Hearing Panel or committee of the Board, as applicable, should evaluate the appropriateness of disgorgement and/or restitution in those cases where the amount of harm is quantifiable and the harmed party is identifiable.

(7) The CRO, Hearing Panel or committee of the Board, as applicable, should consider contributions or settlements by a respondent or any related Member to the harmed party as it relates to the conduct that is the subject of the disciplinary matter.

(8) The CRO, Hearing Panel or committee of the Board, as applicable, may consider a party's inability to pay in connection with the imposition of monetary sanctions.

The Exchange notes that the CRO, Hearing Panel or committee of the Board, as applicable, already consider the above proposed Principal Considerations when determining appropriate remedial sanctions throughout the resolution of disciplinary matters. However, the Exchange now proposes to codify such considerations in order to ensure that the CRO, Hearing Panel or committee of the Board, as applicable, consider aggravating and/or mitigating factors in the same manner across each disciplinary matter which will, in turn, provide for consistency, fairness and that the most appropriate disciplinary measure is implemented during proceedings.

The Exchange intends to announce the operative date of the updates to Rules 8.8, 8.10, and 8.11 at least 30 days in advance via a regulatory notice. To facilitate an orderly transition from the current rules to the proposed rules, the Exchange proposes to apply the current rules to all matters where a subject has received notice pursuant to Rule 8.2(d) prior to the operative date. As a consequence of this transition process, the Exchange will retain the existing processes during the transition period until such time that there are no longer any matters proceeding under the current rules. To facilitate this transition process, the Exchange will retain a transitional Chapter 8 that will contain

[8] The Exchange notes that its other affiliated exchanges, Cboe BZX Exchange, Inc. (''BZX''), Cboe EDGX Exchange, Inc. (''EDGX''), and Cboe BYX Exchange, Inc. (''BYX''), also intend to incorporate these portions of Cboe Options and C2 Rule 13.11 into their Rule 8.11.

[9] The Exchange notes that it maintains the inclusion of committee of the Board (along with the CRO and Hearing Panel) in connection with the imposition of sanctions throughout proposed Rules 8.11(a) and (c), which is currently a difference in text between Cboe Options and C2 Rule 13.11 and current Rule 8.11 and maintains consistency throughout current Rule 8.11.

[10] The proposed change also amends the current language under Rule 8.11 to be provided in paragraph (b), with a heading that reads ''Effective Date of Judgment'', which is consistent with the corresponding heading in Cboe Options and C2 Rule 13.11. No changes are made to the current language. It also adds in the same header language for Rule 8.11 (''Judgment and Sanction'') as that of Cboe Options and C2 Rule 13.11.

[11] *See supra* note 9. The committee of the Board would, thus, also apply the Principal Considerations to any determinations made during a review related to sanctions.

[12] The Exchange notes that, to the extent Cboe Options and C2 Rule 13.11.01 state ''TPH and TPH organization'', the Exchange uses the term ''Member'', which, pursuant to its definition in Rule 1.5(n), covers the same scope of exchange membership as the aforementioned language in Cboe Options and C2 Rule 13.11.01.

the Exchange's rules, as they are at the time this proposal is filed with the Commission. This transitional Chapter 8 will apply only to matters initiated prior to the operational date of the changes proposed herein and it will be posted to the Exchange's public rules website. When the transition is complete and there are no longer any Members or associated persons subject to current Chapter 8, the Exchange will remove the transitional Chapter 8 from its public rules website.

2. Statutory Basis

The Exchange believes the proposed rule change is consistent with the Securities Exchange Act of 1934 (the ''Act'') and the rules and regulations thereunder applicable to the Exchange and, in particular, the requirements of Section 6(b) of the Act.[13] Specifically, the Exchange believes the proposed rule change is consistent with the Section 6(b)(5) [14] requirements that the rules of an exchange be designed to prevent fraudulent and manipulative acts and practices, to promote just and equitable principles of trade, to foster cooperation and coordination with persons engaged in regulating, clearing, settling, processing information with respect to, and facilitating transactions in securities, to remove impediments to and perfect the mechanism of a free and open market and a national market system, and, in general, to protect investors and the public interest. Additionally, the Exchange believes the proposed rule change is consistent with the Section 6(b)(5) [15] requirement that the rules of an exchange not be designed to permit unfair discrimination between customers, issuers, brokers, or dealers.

In particular, the proposed rule changes are designed to be consistent with the corresponding rules of its affiliated exchanges,[16] which have been previously filed with the Commission. The Exchange believes that by providing consistent disciplinary rules across the affiliated exchanges the proposed rule change would foster cooperation and coordination with persons engaged in facilitating transactions in securities and would remove impediments to and perfect the mechanism of a free and open market and a national market system by increasing the understanding of the Exchange's disciplinary process for Members that participate across the affiliated exchanges, as well as result in greater uniformity, and less burdensome and more efficient regulatory processes. Moreover, the Exchange believes that removing an unnecessary waiting period in the disciplinary process, as well as a review provision that is not used, would serve to expedite the outcome of a matter or the progression of a matter through the next steps in the process, thereby protecting investors and the public interest by conserving Exchange and Member resources. The proposed rule change to remove the waiting period before an offer of settlement becomes final and the Board's initiative to review such will provide for a more efficient, streamlined disciplinary process as a matter would then be either immediately closed or continued to the next steps of the proceedings upon the CRO's acceptance or rejection, respectively, of an offer of settlement. Additionally, and as stated above, the CRO's regulatory decision-making responsibilities are entirely separate from those responsible for the Exchange's business interests, therefore, allowing the CRO to accept or reject offers of settlement with finality will significantly expedite the settlement process while ensuring that the independence and integrity of the regulatory process is maintained. In light of these proposed changes, the Exchange notes that the proposed addition of the Principal Considerations will ensure that the CRO determines each offer of settlement using the same set of fair standards and factors, thereby protecting investors and the public interest throughout the disciplinary process.

In addition to this, the Exchange also believes that the proposed rule in consistent with Section 6(b)(6) of the Act,[17] which requires the rules of an exchange provide that its members be appropriately disciplined for violations of the Act as well as the rules and regulations thereunder, or the rules of the Exchange, by expulsion, suspension, limitation of activities, functions, and operations, fine, censure, being suspended or barred from being associated with a member, or any other fitting sanction, as well as Section 6(b)(7) of the Act,[18] in that it provides fair procedures for the disciplining of Members and persons associated with Members, the denial of Member status to any person seeking Membership therein, the barring of any person from becoming associated with a Member thereof, and the prohibition or limitation by the Exchange of any person with respect to access to services offered by the Exchange or a Member thereof. Specifically, the proposed rule change to incorporate Principal Considerations that the CRO, Hearing Panel or committee of the Board, as applicable, may take into consideration when determining disciplinary sanctions will ensure that the Exchange implements the most appropriate disciplinary mechanisms for violations and a fair process in determining such.

Finally, the Exchange believes that its proposed transition plan would allow for a more orderly and less burdensome transition for the Exchange's Members. The proposed application of current rules to all matters where a subject has received notice pursuant to Rule 8.2(d) prior to the operative date provides a clear demarcation between matters that would proceed under the new rules and those that would be completed under the current rules.

B. Self-Regulatory Organization's Statement on Burden on Competition

The Exchange does not believe that the proposed rule change would impose any burden on competition that is not necessary or appropriate in furtherance of the purposes of the Act. The proposed rule changes are not intended to address competitive issues, but rather, are concerned with facilitating less burdensome regulatory compliance and processes and enhancing the quality of the regulatory processes. The Exchange believes the proposed rule changes would reduce the burdens within the disciplinary process, as well as move matters through the process expeditiously by providing for more efficient finality of offers of settlement, to the benefit of all Members. Moreover, the proposed Principal Considerations will apply to all remedial sanctions throughout the disciplinary process in the same manner, thereby equally benefitting all Members by providing for fair and consistent disciplinary determinations. Additionally, the proposed rule changes are consistent with the rules of the Exchange's affiliates, Cboe Options and C2, which have been previously filed with the Commission.[19]

C. Self-Regulatory Organization's Statement on Comments on the Proposed Rule Change Received From Members, Participants, or Others

The Exchange neither solicited nor received comments on the proposed rule change.

[13] 15 U.S.C. 78f(b).

[14] 15 U.S.C. 78f(b)(5).

[15] *Id.*

[16] *See supra* note 5.

[17] 15 U.S.C. 78f(b)(6).

[18] 15 U.S.C. 78f(b)(6).

[19] *See* Cboe Options Rules 13.8, 13.10(c), 13.11(a), and 13.11.01.

III. Date of Effectiveness of the Proposed Rule Change and Timing for Commission Action

Because the foregoing proposed rule change does not: (i) Significantly affect the protection of investors or the public interest; (ii) impose any significant burden on competition; and (iii) become operative for 30 days from the date on which it was filed, or such shorter time as the Commission may designate, it has become effective pursuant to Section 19(b)(3)(A) of the Act [20] and Rule 19b–4(f)(6) thereunder.[21]

At any time within 60 days of the filing of the proposed rule change, the Commission summarily may temporarily suspend such rule change if it appears to the Commission that such action is necessary or appropriate in the public interest, for the protection of investors, or otherwise in furtherance of the purposes of the Act. If the Commission takes such action, the Commission shall institute proceedings to determine whether the proposed rule change should be approved or disapproved.

IV. Solicitation of Comments

Interested persons are invited to submit written data, views, and arguments concerning the foregoing, including whether the proposed rule change is consistent with the Act. Comments may be submitted by any of the following methods:

Electronic Comments

- Use the Commission's internet comment form (*http://www.sec.gov/rules/sro.shtml*); or
- Send an email to *rule-comments@sec.gov.* Please include File Number SR–CboeEDGA–2020–014 on the subject line.

Paper Comments

- Send paper comments in triplicate to Secretary, Securities and Exchange Commission, 100 F Street NE, Washington, DC 20549–1090.

All submissions should refer to File Number SR–CboeEDGA–2020–014. This file number should be included on the subject line if email is used. To help the Commission process and review your comments more efficiently, please use only one method. The Commission will post all comments on the Commission's internet website (*http://www.sec.gov/rules/sro.shtml*). Copies of the submission, all subsequent amendments, all written statements with respect to the proposed rule change that are filed with the Commission, and all written communications relating to the proposed rule change between the Commission and any person, other than those that may be withheld from the public in accordance with the provisions of 5 U.S.C. 552, will be available for website viewing and printing in the Commission's Public Reference Room, 100 F Street NE, Washington, DC 20549, on official business days between the hours of 10:00 a.m. and 3:00 p.m. Copies of the filing also will be available for inspection and copying at the principal office of the Exchange. All comments received will be posted without change. Persons submitting comments are cautioned that we do not redact or edit personal identifying information from comment submissions. You should submit only information that you wish to make available publicly. All submissions should refer to File Number SR–CboeEDGA–2020–014 and should be submitted on or before June 12, 2020.

For the Commission, by the Division of Trading and Markets, pursuant to delegated authority.[22]

J. Matthew DeLesDernier,

Assistant Secretary.

[FR Doc. 2020–11043 Filed 5–21–20; 8:45 am]

BILLING CODE 8011–01–P

[20] 15 U.S.C. 78s(b)(3)(A).

[21] 17 CFR 240.19b–4(f)(6). In addition, Rule 19b–4(f)(6)(iii) requires a self-regulatory organization to give the Commission written notice of its intent to file the proposed rule change, along with a brief description and text of the proposed rule change, at least five business days prior to the date of filing of the proposed rule change, or such shorter time as designated by the Commission. The Exchange has satisfied this requirement.

[22] 17 CFR 200.30–3(a)(12).

SECURITIES AND EXCHANGE COMMISSION

Sunshine Act Meetings

TIME AND DATE: Notice is hereby given, pursuant to the provisions of the Government in the Sunshine Act, Public Law 94–409, that the Securities and Exchange Commission Asset Management Advisory Committee (''AMAC'') will hold a public meeting on Wednesday, May 27, 2020 at 9:00 a.m.

PLACE: The meeting will be conducted by remote means. Members of the public may watch the webcast of the meeting on the Commission's website at *www.sec.gov.*

STATUS: The meeting will begin at 9:00 a.m. and will be open to the public by webcast on the Commission's website at *www.sec.gov.*

MATTERS TO BE CONSIDERED: On May 5, 2020, the Commission issued notice of the meeting (Release No. 34–88807), indicating that the meeting is open to the public and inviting the public to submit written comments to AMAC. This Sunshine Act notice is being issued because a majority of the Commission may attend the meeting.

The meeting will include a discussion of matters relating to the AMAC's subcommittees and to COVID–19 and the asset management industry.

CONTACT PERSON FOR MORE INFORMATION: For further information, please contact Vanessa A. Countryman from the Office of the Secretary at (202) 551–5400.

Dated: May 19, 2020.

Vanessa A. Countryman,

Secretary.

[FR Doc. 2020–11143 Filed 5–20–20; 11:15 am]

BILLING CODE 8011–01–P

SECURITIES AND EXCHANGE COMMISSION

[Release No. 34–88900; File No. SR–CboeEDGX–2020–022]

Self-Regulatory Organizations; Cboe EDGX Exchange, Inc.; Notice of Filing and Immediate Effectiveness of a Proposed Rule Change To Amend Certain Rules in Connection With the Exchange's Disciplinary Process

May 18, 2020.

Pursuant to Section 19(b)(1) of the Securities Exchange Act of 1934 (''Act''),[1] and Rule 19b–4 thereunder,[2] notice is hereby given that on May 8, 2020, Cboe EDGX Exchange, Inc. (the ''Exchange'' or ''EDGX'') filed with the Securities and Exchange Commission (the ''Commission'') the proposed rule change as described in Items I and II below, which Items have been prepared by the Exchange. The Exchange filed the proposal as a ''non-controversial'' proposed rule change pursuant to Section 19(b)(3)(A)(iii) of the Act [3] and Rule 19b–4(f)(6) thereunder.[4] The Commission is publishing this notice to solicit comments on the proposed rule change from interested persons.

I. Self-Regulatory Organization's Statement of the Terms of Substance of the Proposed Rule Change

Cboe EDGX Exchange, Inc. (the ''Exchange'' or ''EDGX'') proposes to amend certain rules in connection with the Exchange's disciplinary process.

[1] 15 U.S.C. 78s(b)(1).

[2] 17 CFR 240.19b–4.

[3] 15 U.S.C. 78s(b)(3)(A)(iii).

[4] 17 CFR 240.19b–4(f)(6).

The text of the proposed rule change is provided in Exhibit 5.

The text of the proposed rule change is also available on the Exchange's website (*http://markets.cboe.com/us/equities/regulation/rule_filings/edgx/*), at the Exchange's Office of the Secretary, and at the Commission's Public Reference Room.

II. Self-Regulatory Organization's Statement of the Purpose of, and Statutory Basis for, the Proposed Rule Change

In its filing with the Commission, the Exchange included statements concerning the purpose of and basis for the proposed rule change and discussed any comments it received on the proposed rule change. The text of these statements may be examined at the places specified in Item IV below. The Exchange has prepared summaries, set forth in sections A, B, and C below, of the most significant aspects of such statements.

A. Self-Regulatory Organization's Statement of the Purpose of, and Statutory Basis for, the Proposed Rule Change

1. Purpose

The Exchange proposes to amend Rule 8.8 in connection with the timing before which an offer of settlement becomes final, to amend Rule 8.10 in connection with the Board's review of offers of settlement, and to amend Rule 8.11 to be consistent with the corresponding rules of the Exchange's affiliated exchanges, Cboe Exchange, Inc. (''Cboe Options'') and Cboe C2 Exchange, Inc. (''C2'').[5]

First, the Exchange proposes to amend Rule 8.8 which governs offers of settlement during a disciplinary proceeding pursuant to Chapter 8 (Discipline). Specifically, it proposes to amend the timing for which the Chief Regulatory Officer's (''CRO'') decision regarding an offer shall become final pursuant to Rule 8.8(a). Rule 8.8(a) currently provides that a Respondent may submit to the CRO a written offer of settlement, and the CRO may accept an offer of settlement, and, in doing so, issues a decision, including findings and conclusions and imposing a penalty, consistent with the terms of such offer. Pursuant to Rule 8.8(a), the CRO may also reject an offer of settlement and the matter then proceeds as if such offer had not been made. According to Rule 8.8(a), a decision of the CRO issued upon acceptance of an offer of settlement as well as the determination of the CRO whether to accept or reject such an offer does not currently become final until 20 business days after such decision is issued, and the Respondent may not seek review thereof.

The Exchange proposes to eliminate the 20-business day timeframe before which the CRO's determination and decision in connection with an offer of settlement becomes final. This is consistent with the corresponding offer of settlement rules of the Exchange's affiliated exchanges, Cboe Options and C2,[6] which do not have any such waiting period before which the CRO's acceptance (and accompanying decision) or rejection of an offer of settlement becomes final. In addition to providing consistency between the rules of the affiliated exchanges, the proposed rule change also removes a process that unnecessarily prolongs disciplinary proceedings. Where a matter could be either immediately closed or continued to the next steps of the proceedings upon the CRO's acceptance or rejection, respectively, of an offer of settlement, the current process unnecessarily leaves a matter open.

Second, and in line with the proposed rule change to Rule 8.8, the Exchange also proposes to remove Rule 8.8 offers of settlement from the list of certain procedural decisions in Rule 8.10 that may be reviewed by the Board on its own initiative within 20 business days after the issuance of the decision. This is also consistent with the corresponding disciplinary review rules of Cboe Options and C2, which do not include offers of settlement as decisions that the Board may review on its own initiative.[7] The Exchange notes that the Board has not previously initiated a review of an offer of settlement. Therefore, the Exchange believes maintaining a 20-business day waiting period for a review that is not invoked is unnecessary and merely exhausts additional Exchange and Member resources in the time that a matter could have been resolved or have continued through proceedings. Allowing the CRO to accept or reject offers of settlement with finality will significantly expedite the settlement process while ensuring that the independence and integrity of the regulatory process is maintained, as the CRO's regulatory decision-making responsibilities are entirely separate from those responsible for the Exchange's business interests.

Finally, the Exchange proposes to amend Rule 8.11 to incorporate the Principal Considerations in Determining Sanctions (''Principal Considerations'') into proposed Rule 8.11(c), which are currently in corresponding Rule 13.11.01 of Cboe Options and C2, and the general provision regarding sanctions into proposed Rule 8.11(a), which are currently in corresponding Rule 13.11(a) of Cboe Options and C2, in order to promote consistency and uniformity across the affiliated exchanges in determining appropriate remedial sanctions.[8] Particularly, the proposed rule change incorporates the general authority of the CRO, Hearing Panel, and committee of the Board[9] to determine and apply sanctions, consistent with Cboe Options and C2 Rule 13.11(a), into proposed Rule 8.11(a), which provides that Members and persons associated with Members shall (subject to any rule or order of the Securities and Exchange Commission) be appropriately disciplined by the CRO, Hearing Panel, or the committee of the Board, as applicable, for violations under these Rules by expulsion, suspension, limitation of activities, functions and operations, fine, censure, being suspended or barred from being associated with a Member, suspension or revocation of membership, or any other fitting sanction. This authority is already enumerated in Rule 8.1, however, the proposed provision provides consistency with the rules of the Exchange's affiliated options exchanges.[10] As proposed in Rule 8.11(c), the Principal Considerations promote consistency and uniformity in the imposition of penalties, and should be considered in connection with the imposition of sanctions in all cases in determining appropriate remedial sanctions through the resolution of

[5] *See* Cboe Options Rule 13.11. The Exchange notes that C2 incorporates Cboe Options Disciplinary rules by reference.

[6] *See* Cboe Options Rule 13.8(a). The Exchange notes that C2 incorporates Cboe Options Disciplinary rules by reference.

[7] *See* Cboe Options Rule 13.10(c).

[8] The Exchange notes that its other affiliated exchanges, Cboe BZX Exchange, Inc. (''BZX''), Cboe EDGX Exchange, Inc. (''EDGX''), and Cboe BYX Exchange, Inc. (''BYX''), also intend to incorporate these portions of Cboe Options and C2 Rule 13.11 into their Rule 8.11.

[9] The Exchange notes that it maintains the inclusion of committee of the Board (along with the CRO and Hearing Panel) in connection with the imposition of sanctions throughout proposed Rules 8.11(a) and (c), which is currently a difference in text between Cboe Options and C2 Rule 13.11 and current Rule 8.11 and maintains consistency throughout current Rule 8.11.

[10] The proposed change also amends the current language under Rule 8.11 to be provided in paragraph (b), with a heading that reads ''Effective Date of Judgment'', which is consistent with the corresponding heading in Cboe Options and C2 Rule 13.11. No changes are made to the current language. It also adds in the same header language for Rule 8.11 (''Judgment and Sanction'') as that of Cboe Options and C2 Rule 13.11.

disciplinary matters through offers of settlement or after formal disciplinary hearings. The Principal Considerations include the following:

(1) Disciplinary sanctions are remedial in nature. The CRO, Hearing Panel or committee of the Board,[11] as applicable, should design sanctions to prevent and deter future misconduct by wrongdoers, to discourage others from engaging in similar misconduct, and to improve overall business standards of Exchange Members. Pursuant to this Rule 8.11, the CRO, Hearing Panel or committee of the Board, as applicable, may impose sanctions including expulsion, suspension, limitation of activities, fine, censure, suspension or revocation of one or more Members, or any other fitting sanction.

(2) An important objective of the disciplinary process is to deter future misconduct by imposing progressively escalating sanctions on recidivists. The CRO, Hearing Panel or committee of the Board, as applicable, should consider a party's relevant disciplinary history in determining sanctions.

(3) The CRO, Hearing Panel or committee of the Board, as applicable, should consider prior similar disciplinary decisions (relevant precedent) in determining an appropriate sanction and may consider relevant precedent from other self-regulatory organizations.

(4) The CRO, Hearing Panel or committee of the Board, as applicable, should tailor sanctions to address the misconduct at issue. The CRO, Hearing Panel or committee of the Board, as applicable, should impose sanctions tailored to the misconduct at issue. For example, the CRO, Hearing Panel or committee of the Board, as applicable, may require a Member[12] to, among other things: retain a qualified independent consultant to improve future compliance with regulatory requirements; disclose disciplinary history to new and/or existing clients; implement heightened supervision of certain employees; or requalify by examination in any or all registered capacities.

(5) Aggregation of violations may be appropriate in certain instances for purposes of determining sanctions. The CRO, Hearing Panel or committee of the Board, as applicable, may aggregate individual violations of particular rules and treat such violations as a single offense for purposes of determining sanctions. Aggregation may be appropriate when the Exchange utilizes a comprehensive surveillance program in the detection of potential rules violations. Aggregation may also be appropriate where the Exchange has reviewed activity over an extensive time period during the course of an investigation of matters disclosed either through a routine examination of the Member or as the result of a complaint. Similarly, where no exceptional circumstances are present, the Exchange may impose a fine based upon a determination that there exists a pattern or practice of violative conduct. The Exchange also may aggregate similar violations generally if the conduct was unintentional, there was no injury to public investors, or the violations resulted from a single systemic problem or cause that has been corrected.

(6) The CRO, Hearing Panel or committee of the Board, as applicable, should evaluate appropriateness of disgorgement and/or restitution. The CRO, Hearing Panel or committee of the Board, as applicable, should evaluate the appropriateness of disgorgement and/or restitution in those cases where the amount of harm is quantifiable and the harmed party is identifiable.

(7) The CRO, Hearing Panel or committee of the Board, as applicable, should consider contributions or settlements by a respondent or any related Member to the harmed party as it relates to the conduct that is the subject of the disciplinary matter.

(8) The CRO, Hearing Panel or committee of the Board, as applicable, may consider a party's inability to pay in connection with the imposition of monetary sanctions.

The Exchange notes that the CRO, Hearing Panel or committee of the Board, as applicable, already consider the above proposed Principal Considerations when determining appropriate remedial sanctions throughout the resolution of disciplinary matters. However, the Exchange now proposes to codify such considerations in order to ensure that the CRO, Hearing Panel or committee of the Board, as applicable, consider aggravating and/or mitigating factors in the same manner across each disciplinary matter which will, in turn, provide for consistency, fairness and that the most appropriate disciplinary measure is implemented during proceedings.

The Exchange intends to announce the operative date of the updates to Rules 8.8, 8.10, and 8.11 at least 30 days in advance via a regulatory notice. To facilitate an orderly transition from the current rules to the proposed rules, the Exchange proposes to apply the current rules to all matters where a subject has received notice pursuant to Rule 8.2(d) prior to the operative date. As a consequence of this transition process, the Exchange will retain the existing processes during the transition period until such time that there are no longer any matters proceeding under the current rules. To facilitate this transition process, the Exchange will retain a transitional Chapter 8 that will contain the Exchange's rules, as they are at the time this proposal is filed with the Commission. This transitional Chapter 8 will apply only to matters initiated prior to the operational date of the changes proposed herein and it will be posted to the Exchange's public rules website. When the transition is complete and there are no longer any Members or associated persons subject to current Chapter 8, the Exchange will remove the transitional Chapter 8 from its public rules website.

2. Statutory Basis

The Exchange believes the proposed rule change is consistent with the Securities Exchange Act of 1934 (the ''Act'') and the rules and regulations thereunder applicable to the Exchange and, in particular, the requirements of Section 6(b) of the Act.[13] Specifically, the Exchange believes the proposed rule change is consistent with the Section 6(b)(5)[14] requirements that the rules of an exchange be designed to prevent fraudulent and manipulative acts and practices, to promote just and equitable principles of trade, to foster cooperation and coordination with persons engaged in regulating, clearing, settling, processing information with respect to, and facilitating transactions in securities, to remove impediments to and perfect the mechanism of a free and open market and a national market system, and, in general, to protect investors and the public interest. Additionally, the Exchange believes the proposed rule change is consistent with the Section 6(b)(5)[15] requirement that the rules of an exchange not be designed to permit unfair discrimination between customers, issuers, brokers, or dealers.

In particular, the proposed rule changes are designed to be consistent with the corresponding rules of its

[11] *See supra* note 9. The committee of the Board would, thus, also apply the Principal Considerations to any determinations made during a review related to sanctions.

[12] The Exchange notes that, to the extent Cboe Options and C2 Rule 13.11.01 state ''TPH and TPH organization'', the Exchange uses the term ''Member'', which, pursuant to its definition in Rule 1.5(n), covers the same scope of exchange membership as the aforementioned language in Cboe Options and C2 Rule 13.11.01.

[13] 15 U.S.C. 78f(b).

[14] 15 U.S.C. 78f(b)(5).

[15] *Id.*

affiliated exchanges,[16] which have been previously filed with the Commission. The Exchange believes that by providing consistent disciplinary rules across the affiliated exchanges the proposed rule change would foster cooperation and coordination with persons engaged in facilitating transactions in securities and would remove impediments to and perfect the mechanism of a free and open market and a national market system by increasing the understanding of the Exchange's disciplinary process for Members that participate across the affiliated exchanges, as well as result in greater uniformity, and less burdensome and more efficient regulatory processes. Moreover, the Exchange believes that removing an unnecessary waiting period in the disciplinary process, as well as a review provision that is not used, would serve to expedite the outcome of a matter or the progression of a matter through the next steps in the process, thereby protecting investors and the public interest by conserving Exchange and Member resources. The proposed rule change to remove the waiting period before an offer of settlement becomes final and the Board's initiative to review such will provide for a more efficient, streamlined disciplinary process as a matter would then be either immediately closed or continued to the next steps of the proceedings upon the CRO's acceptance or rejection, respectively, of an offer of settlement. Additionally, and as stated above, the CRO's regulatory decision-making responsibilities are entirely separate from those responsible for the Exchange's business interests, therefore, allowing the CRO to accept or reject offers of settlement with finality will significantly expedite the settlement process while ensuring that the independence and integrity of the regulatory process is maintained. In light of these proposed changes, the Exchange notes that the proposed addition of the Principal Considerations will ensure that the CRO determines each offer of settlement using the same set of fair standards and factors, thereby protecting investors and the public interest throughout the disciplinary process.

In addition to this, the Exchange also believes that the proposed rule in consistent with Section 6(b)(6) of the Act,[17] which requires the rules of an exchange provide that its members be appropriately disciplined for violations of the Act as well as the rules and regulations thereunder, or the rules of the Exchange, by expulsion, suspension, limitation of activities, functions, and operations, fine, censure, being suspended or barred from being associated with a member, or any other fitting sanction, as well as Section 6(b)(7) of the Act,[18] in that it provides fair procedures for the disciplining of Members and persons associated with Members, the denial of Member status to any person seeking Membership therein, the barring of any person from becoming associated with a Member thereof, and the prohibition or limitation by the Exchange of any person with respect to access to services offered by the Exchange or a Member thereof. Specifically, the proposed rule change to incorporate Principal Considerations that the CRO, Hearing Panel or committee of the Board, as applicable, may take into consideration when determining disciplinary sanctions will ensure that the Exchange implements the most appropriate disciplinary mechanisms for violations and a fair process in determining such.

Finally, the Exchange believes that its proposed transition plan would allow for a more orderly and less burdensome transition for the Exchange's Members. The proposed application of current rules to all matters where a subject has received notice pursuant to Rule 8.2(d) prior to the operative date provides a clear demarcation between matters that would proceed under the new rules and those that would be completed under the current rules.

B. Self-Regulatory Organization's Statement on Burden on Competition

The Exchange does not believe that the proposed rule change would impose any burden on competition that is not necessary or appropriate in furtherance of the purposes of the Act. The proposed rule changes are not intended to address competitive issues, but rather, are concerned with facilitating less burdensome regulatory compliance and processes and enhancing the quality of the regulatory processes. The Exchange believes the proposed rule changes would reduce the burdens within the disciplinary process, as well as move matters through the process expeditiously by providing for more efficient finality of offers of settlement, to the benefit of all Members. Moreover, the proposed Principal Considerations will apply to all remedial sanctions throughout the disciplinary process in the same manner, thereby equally benefitting all Members by providing for fair and consistent disciplinary determinations. Additionally, the proposed rule changes are consistent with the rules of the Exchange's affiliates, Cboe Options and C2, which have been previously filed with the Commission.[19]

C. Self-Regulatory Organization's Statement on Comments on the Proposed Rule Change Received From Members, Participants, or Others

The Exchange neither solicited nor received comments on the proposed rule change.

III. Date of Effectiveness of the Proposed Rule Change and Timing for Commission Action

Because the foregoing proposed rule change does not: (i) Significantly affect the protection of investors or the public interest; (ii) impose any significant burden on competition; and (iii) become operative for 30 days from the date on which it was filed, or such shorter time as the Commission may designate, it has become effective pursuant to Section 19(b)(3)(A) of the Act[20] and Rule 19b–4(f)(6) thereunder.[21]

At any time within 60 days of the filing of the proposed rule change, the Commission summarily may temporarily suspend such rule change if it appears to the Commission that such action is necessary or appropriate in the public interest, for the protection of investors, or otherwise in furtherance of the purposes of the Act. If the Commission takes such action, the Commission shall institute proceedings to determine whether the proposed rule change should be approved or disapproved.

IV. Solicitation of Comments

Interested persons are invited to submit written data, views, and arguments concerning the foregoing, including whether the proposed rule change is consistent with the Act. Comments may be submitted by any of the following methods:

Electronic Comments

- Use the Commission's internet comment form (*http://www.sec.gov/rules/sro.shtml*); or
- Send an email to *rule-comments@sec.gov.* Please include File Number SR–

[16] *See supra* note 5.

[17] 15 U.S.C. 78f(b)(6).

[18] 15 U.S.C. 78f(b)(6).

[19] *See* Cboe Options Rules 13.8, 13.10(c), 13.11(a), and 13.11.01.

[20] 15 U.S.C. 78s(b)(3)(A).

[21] 17 CFR 240.19–4(f)(6). In addition, Rule 19b–4(f)(6)(iii) requires a self-regulatory organization to give the Commission written notice of its intent to file the proposed rule change, along with a brief description and text of the proposed rule change, at least five business days prior to the date of filing of the proposed rule change, or such shorter time as designated by the Commission. The Exchange has satisfied this requirement.

CboeEDGX–2020–022 on the subject line.

Paper Comments

• Send paper comments in triplicate to Secretary, Securities and Exchange Commission, 100 F Street NE, Washington, DC 20549–1090.

All submissions should refer to File Number SR–CboeEDGX–2020–022. This file number should be included on the subject line if email is used. To help the Commission process and review your comments more efficiently, please use only one method. The Commission will post all comments on the Commission's internet website (*http://www.sec.gov/rules/sro.shtml*). Copies of the submission, all subsequent amendments, all written statements with respect to the proposed rule change that are filed with the Commission, and all written communications relating to the proposed rule change between the Commission and any person, other than those that may be withheld from the public in accordance with the provisions of 5 U.S.C. 552, will be available for website viewing and printing in the Commission's Public Reference Room, 100 F Street NE, Washington, DC 20549, on official business days between the hours of 10:00 a.m. and 3:00 p.m. Copies of the filing also will be available for inspection and copying at the principal office of the Exchange. All comments received will be posted without change. Persons submitting comments are cautioned that we do not redact or edit personal identifying information from comment submissions. You should submit only information that you wish to make available publicly. All submissions should refer to File Number SR–CboeEDGX–2020–022 and should be submitted on or before June 12, 2020.

For the Commission, by the Division of Trading and Markets, pursuant to delegated authority.[22]

J. Matthew DeLesDernier,

Assistant Secretary.

[FR Doc. 2020–11044 Filed 5–21–20; 8:45 am]

BILLING CODE 8011–01–P

[22] 17 CFR 200.30–3(a)(12).

SECURITIES AND EXCHANGE COMMISSION

[Investment Company Act Release No. 33867; 812–15059]

Varagon Capital Corporation, et al.

May 18, 2020.

AGENCY: Securities and Exchange Commission (''Commission'').

ACTION: Notice.

Notice of application for an order under sections 17(d) and 57(i) of the Investment Company Act of 1940 (the ''Act'') and rule 17d–1 under the Act to permit certain joint transactions otherwise prohibited by sections 17(d) and 57(a)(4) of the Act and rule 17d–1 under the Act.

Summary of Application: Applicants request an order to permit certain business development companies (''BDCs'') and closed-end management investment companies to co-invest in portfolio companies with each other and with certain affiliated investment funds and accounts.

Applicants: Varagon Capital Corporation (''Varagon BDC''), VCC Advisors, LLC (''Varagon BDC Adviser''), Varagon Capital Partners, L.P. (''Varagon'', and together with Varagon BDC Adviser, the ''Existing Advisers''), Varagaon Fund I, L.P. (''Existing Affiliated Fund'').

Filing Dates: The application was filed on August 12, 2019, and amended on November 27, 2019, February 20, 2020 and April 29, 2020.

Hearing or Notification of Hearing: An order granting the requested relief will be issued unless the Commission orders a hearing. Interested persons may request a hearing by emailing the Commission's Secretary at *Secretarys-Office@sec.gov* and serving applicants with a copy of the request by email. Hearing requests should be received by the Commission by 5:30 p.m. on June 12, 2020, and should be accompanied by proof of service on applicants, in the form of an affidavit or, for lawyers, a certificate of service. Pursuant to rule 0–5 under the Act, hearing requests should state the nature of the writer's interest, any facts bearing upon the desirability of a hearing on the matter, the reason for the request, and the issues contested. Persons who wish to be notified of a hearing may request notification by emailing the Commission's Secretary at *Secretarys-Office@sec.gov.*

ADDRESSES: Secretary, U.S. Securities and Exchange Commission, *Secretarys-Office@sec.gov* Applicants: c/o Afsar Farman-Farmaian, *AFarmin-farmaian@varagon.com.*

FOR FURTHER INFORMATION CONTACT: Barbara T. Heussler, Senior Counsel, at 202–551–6990, or Trace W. Rakestraw, Branch Chief, at (202) 551–6825 (Division of Investment Management, Chief Counsel's Office).

SUPPLEMENTARY INFORMATION: The following is a summary of the application. The complete application may be obtained via the Commission's website by searching for the file number, or for an applicant using the Company name box, at *http://www.sec.gov/search/search.htm* or by calling (202) 551–8090.

Introduction

1. The applicants request an order of the Commission under sections 17(d) and 57(i) of the Act and rule 17d–1 under the Act (''Order'') to permit, subject to the terms and conditions set forth in the application (the ''Conditions''), one or more Regulated Funds[1] and/or one or more Affiliated Funds[2] to enter into Co-Investment Transactions with each other. ''Co-Investment Transaction'' means any transaction in which a Regulated Fund (or its Wholly-Owned Investment Sub (defined below)) participated together with one or more Affiliated Funds and/or one or more other Regulated Funds

[1] ''Regulated Funds'' means Varagon BDC, the Future Regulated Funds and the BDC Downstream Funds. ''Future Regulated Fund'' means a closed-end management investment company (a) that is registered under the Act or has elected to be regulated as a BDC, (b) whose investment adviser (and sub-adviser(s), if any) are an Adviser, and (c) that intends to participate in the proposed co-investment program (the ''Co-Investment Program'').

''BDC Downstream Fund'' means, with respect to any Regulated Fund that is a BDC, an entity (i) that the BDC directly or indirectly controls, (ii) that is not controlled by any person other than the BDC (except a person that indirectly controls the entity solely because it controls the BDC), (iii) that would be an investment company but for section 3(c)(1) or 3(c)(7) of the Act, (iv) whose investment adviser (and sub-adviser(s), if any) are an Adviser, (v) that is not a Wholly-Owned Investment Sub, and (vi) that intends to participate in the Co-Investment Program.

''Adviser'' means the Existing Advisers and any Future Adviser. ''Future Adviser'' means any investment adviser that in the future (i) is controlled by Varagon, (ii)(a) is registered as an investment adviser under the Investment Advisers Act of 1940 (the ''Advisers Act'') or (b) is a relying adviser of an investment adviser that is registered under the Advisers Act and that is controlled by Varagon, and (iii) is not a Regulated Fund or a subsidiary of a Regulated Fund.

[2] ''Affiliated Fund'' means the Existing Affiliated Fund, the Varagon Proprietary Accounts (as defined below), and any entity (a) whose investment adviser (and sub-adviser(s), if any) are an Adviser, (b) that either (x) would be an investment company but for section 3(c)(1), 3(c)(5)(C) or 3(c)(7) of the Act, or (y) relies on rule 3a–7 under the Act, (c) that is not a BDC Downstream Fund, and (d) that intends to participate in the Co-Investment Program. Applicants represent that no Existing Affiliated Fund is a BDC Downstream Fund.

in reliance on the Order. ''Potential Co-Investment Transaction'' means any investment opportunity in which a Regulated Fund (or its Wholly-Owned Investment Sub) could not participate together with one or more Affiliated Funds and/or one or more other Regulated Funds without obtaining and relying on the Order.[3]

Applicants

2. Varagon BDC is a Maryland corporation organized as a non-diversified closed-end management investment company that intends to elect to be regulated as a BDC under the Act.[4] Varagon BDC will be managed by a Board [5] which will consist of five directors, three of whom will be Independent Directors.[6] Prior to relying on the requested Order, Varagon BDC will have filed an election to be regulated as a BDC under the Act.

3. Varagon BDC Adviser, a Delaware limited liability company that is registered under the Advisers Act, serves as the investment adviser to Varagon BDC pursuant to an investment advisory agreement.

4. Varagon, a Delaware limited partnership, is registered as an investment adviser under the Advisers Act. Varagon serves as the investment adviser to the Existing Affiliated Fund pursuant to an investment advisory agreement. Varagon also may serve as the investment adviser to Future Regulated Funds and Future Affiliated Funds.

5. The Existing Affiliated Fund, a Delaware limited partnership, would be an investment company but for section 3(c)(7) of the Act.

6. Varagon Proprietary Accounts [7] may hold various financial assets in a principal capacity.

7. Applicants state that a Regulated Fund may, from time to time, form one or more Wholly-Owned Investment Subs.[8] Such a subsidiary may be prohibited from investing in a Co-Investment Transaction with a Regulated Fund (other than its parent) or any Affiliated Fund because it would be a company controlled by its parent Regulated Fund for purposes of section 57(a)(4) and rule 17d–1. Applicants request that each Wholly-Owned Investment Sub be permitted to participate in Co-Investment Transactions in lieu of the Regulated Fund that owns it and that the Wholly-Owned Investment Sub's participation in any such transaction be treated, for purposes of the Order, as though the parent Regulated Fund were participating directly.

Applicants' Representations

A. Allocation Process

8. Applicants represent that the Advisers have established processes for allocating initial investment opportunities, opportunities for subsequent investments in an issuer and dispositions of securities holdings reasonably designed to treat all clients fairly and equitably. Further, applicants represent that these processes will be extended and modified in a manner reasonably designed to ensure that the additional transactions permitted under the Order will both (i) be fair and equitable to the Regulated Funds and the Affiliated Funds and (ii) comply with the Conditions.

9. Specifically, applicants state that the Advisers are organized and managed such that the individual portfolio managers, as well as the teams and committees of portfolio managers and senior management (''Investment Teams'' and Investment Committees''), responsible for evaluating investment opportunities and making investment decisions on behalf of clients are promptly notified of the opportunities. If the Order is granted, the Advisers will establish, maintain and implement policies and procedures reasonably designed to ensure that, when such opportunities arise, the Advisers to the relevant Regulated Funds are promptly notified and receive the same information about the opportunity as any other Advisers considering the opportunity for their clients. In particular, consistent with Condition 1, if a Potential Co-Investment Transaction falls within the then-current Objectives and Strategies [9] and any Board-Established Criteria [10] of a Regulated Fund, the policies and procedures will require that the relevant portfolio managers, Investment Teams and/or Investment Committees responsible for that Regulated Fund receive sufficient

[3] All existing entities that currently intend to rely on the Order have been named as applicants and any existing or future entities that may rely on the Order in the future will comply with the terms and Conditions set forth in the application.

[4] Section 2(a)(48) defines a BDC to be any closed-end investment company that operates for the purpose of making investments in securities described in section 55(a)(1) through 55(a)(3) and makes available significant managerial assistance with respect to the issuers of such securities.

[5] ''Board'' means (i) with respect to a Regulated Fund other than a BDC Downstream Fund, the board of directors (or the equivalent) of the Regulated Fund and (ii) with respect to a BDC Downstream Fund, the Independent Party of the BDC Downstream Fund.

''Independent Party'' means, with respect to a BDC Downstream Fund, (i) if the BDC Downstream Fund has a board of directors (or the equivalent), the board or (ii) if the BDC Downstream Fund does not have a board of directors (or the equivalent), a transaction committee or advisory committee of the BDC Downstream Fund.

[6] ''Independent Director'' means a member of the Board of any relevant entity who is not an ''interested person'' as defined in section 2(a)(19) of the Act. No Independent Director of a Regulated Fund (including any non-interested member of an Independent Party) will have a financial interest in any Co-Investment Transaction, other than indirectly through share ownership in one of the Regulated Funds.

[7] ''Varagon Proprietary Accounts'' means any direct or indirect, wholly- or majority-owned subsidiary of Varagon, including Varagon BDC Adviser, or any other Adviser that from time to time, may hold various financial assets in a principal capacity, and intends to participate in the Co-Investment Program.

[8] ''Wholly-Owned Investment Sub'' means an entity (i) that is wholly-owned by a Regulated Fund (with such Regulated Fund at all times holding, beneficially and of record, directly or indirectly, 100% of the voting and economic interests); (ii) whose sole business purpose is to hold one or more investments on behalf of such Regulated Fund (and in the case of an SBIC Subsidiary, maintain a license under the Small Business Investment Act of 1958 (''SBA Act'') and issue debentures guaranteed by the Small Business Administration (''SBA'')); (iii) with respect to which such Regulated Fund's Board has the sole authority to make all determinations with respect to the entity's participation under the Conditions; and (iv) that would be an investment company but for section 3(c)(1), 3(c)(5)(C), or 3(c)(7) of the Act. ''SBIC Subsidiary'' means a Wholly-Owned Investment Sub that is licensed by the SBA to operate under the SBA Act as a small business investment company.

[9] ''Objectives and Strategies'' means (i) with respect to any Regulated Fund other than a BDC Downstream Fund, its investment objectives and strategies, as described in its most current registration statement on Form N–2, other current filings with the Commission under the Securities Act of 1933 (the ''Securities Act'') or under the Securities Exchange Act of 1934, as amended, and its most current report to stockholders, and (ii) with respect to any BDC Downstream Fund, those investment objectives and strategies described in its disclosure documents (including private placement memoranda and reports to equity holders) and organizational documents (including operating agreements).

[10] ''Board-Established Criteria'' means criteria that the Board of a Regulated Fund may establish from time to time to describe the characteristics of Potential Co-Investment Transactions regarding which the Adviser to the Regulated Fund should be notified under Condition 1. The Board-Established Criteria will be consistent with the Regulated Fund's Objectives and Strategies. If no Board-Established Criteria are in effect, then the Regulated Fund's Adviser will be notified of all Potential Co-Investment Transactions that fall within the Regulated Fund's then-current Objectives and Strategies. Board-Established Criteria will be objective and testable, meaning that they will be based on observable information, such as industry/sector of the issuer, minimum EBITDA of the issuer, asset class of the investment opportunity or required commitment size, and not on characteristics that involve a discretionary assessment. The Adviser to the Regulated Fund may from time to time recommend criteria for the Board's consideration, but Board-Established Criteria will only become effective if approved by a majority of the Independent Directors. The Independent Directors of a Regulated Fund may at any time rescind, suspend or qualify their approval of any Board-Established Criteria, though applicants anticipate that, under normal circumstances, the Board would not modify these criteria more often than quarterly.

information to allow the Regulated Fund's Adviser to make its independent determination and recommendations under the Conditions.

10. The Adviser to each applicable Regulated Fund will then make an independent determination of the appropriateness of the investment for the Regulated Fund in light of the Regulated Fund's then-current circumstances. If the Adviser to a Regulated Fund deems the Regulated Fund's participation in any Potential Co-Investment Transaction to be appropriate, then it will formulate a recommendation regarding the proposed order amount for the Regulated Fund.

11. Applicants state that, for each Regulated Fund and Affiliated Fund whose Adviser recommends participating in a Potential Co-Investment Transaction, the Adviser will formulate a proposed order amount. Prior to the External Submission (as defined below), each proposed order amount may be reviewed and adjusted, in accordance with the Advisers' written allocation policies and procedures, by an allocation committee for the area in question (*e.g.,* credit) on which senior management, legal and compliance personnel from that area participate or, in the case of issues involving multiple areas, an Adviser-wide allocation committee on which senior management, legal and compliance personnel for the Advisers participate.[11] The order of a Regulated Fund or Affiliated Fund resulting from this process is referred to as its ''Internal Order.'' The Internal Order will be submitted for approval by the Required Majority of any participating Regulated Funds in accordance with the Conditions.[12]

12. If the aggregate Internal Orders for a Potential Co-Investment Transaction do not exceed the size of the investment opportunity immediately prior to the submission of the orders to the underwriter, broker, dealer or issuer, as applicable (the ''External Submission''), then each Internal Order will be fulfilled as placed. If, on the other hand, the aggregate Internal Orders for a Potential Co-Investment Transaction exceed the size of the investment opportunity immediately prior to the External Submission, then the allocation of the opportunity will be made pro rata on the basis of the size of the Internal Orders.[13] If, subsequent to such External Submission, the size of the opportunity is increased or decreased, or if the terms of such opportunity, or the facts and circumstances applicable to the Regulated Funds' or the Affiliated Funds' consideration of the opportunity, change, the participants will be permitted to submit revised Internal Orders in accordance with written allocation policies and procedures that the Advisers will establish, implement and maintain.[14]

B. Follow-On Investments

13. Applicants state that from time to time the Regulated Funds and Affiliated Funds may have opportunities to make Follow-On Investments [15] in an issuer in which a Regulated Fund and one or more other Regulated Funds and/or Affiliated Funds previously have invested.

14. Applicants propose that Follow-On Investments would be divided into two categories depending on whether the prior investment was a Co-Investment Transaction or a Pre-Boarding Investment.[16] If the Regulated Funds and Affiliated Funds have previously participated in a Co-Investment Transaction with respect to the issuer and only such funds are participating in the Follow-On Investment, then the terms and approval of the Follow-On Investment would be subject to the Standard Review Follow-Ons described in Condition 8. If the Regulated Funds and Affiliated Funds have not previously participated in a Co-Investment Transaction with respect to the issuer but hold a Pre-Boarding Investment and only such funds are participating in the Follow-On Investment, then the terms and approval of the Follow-On Investment would be subject to the Enhanced-Review Follow-Ons described in Condition 9. All Enhanced Review Follow-Ons require the approval of the Required Majority. For a given issuer, the participating Regulated Funds and Affiliated Funds need to comply with the requirements of Enhanced-Review Follow-Ons only for the first Co-Investment Transaction. Subsequent Co-Investment Transactions with respect to the issuer would be governed by the requirements of Standard Review Follow-Ons.

15. A Regulated Fund would be permitted to invest in Standard Review Follow-Ons either with the approval of the Required Majority under Condition 8(c) or without Board approval under Condition 8(b) if it is (i) a Pro Rata Follow-On Investment [17] or (ii) a Non-Negotiated Follow-On Investment.[18] Applicants believe that these Pro Rata and Non-Negotiated Follow-On Investments do not present a significant opportunity for overreaching on the part

[11] The reason for any such adjustment to a proposed order amount will be documented in writing and preserved in the records of each Adviser.

[12] ''Required Majority'' means a required majority, as defined in section 57(o) of the Act. In the case of a Regulated Fund that is a registered closed-end fund, the Board members that make up the Required Majority will be determined as if the Regulated Fund were a BDC subject to section 57(o). In the case of a BDC Downstream Fund with a board of directors (or the equivalent), the members that make up the Required Majority will be determined as if the BDC Downstream Fund were a BDC subject to section 57(o). In the case of a BDC Downstream Fund with a transaction committee or advisory committee, the committee members that make up the Required Majority will be determined as if the BDC Downstream Fund were a BDC subject to section 57(o) and as if the committee members were directors of the fund.

[13] The Advisers will maintain records of all proposed order amounts, Internal Orders and External Submissions in conjunction with Potential Co-Investment Transactions. Each applicable Adviser will provide the Eligible Directors with information concerning the Affiliated Funds' and Regulated Funds' order sizes to assist the Eligible Directors with their review of the applicable Regulated Fund's investments for compliance with the Conditions. ''Eligible Directors'' means, with respect to a Regulated Fund and a Potential Co-Investment Transaction, the members of the Regulated Fund's Board eligible to vote on that Potential Co-Investment Transaction under section 57(o) of the Act (treating any registered investment company or series thereof as a BDC for this purpose).

[14] The Board of the Regulated Fund will then either approve or disapprove of the investment opportunity in accordance with Condition 2, 6, 7, 8 or 9, as applicable.

[15] ''Follow-On Investment'' means an additional investment in the same issuer, including, but not limited to, through the exercise of warrants, conversion privileges or other rights to purchase securities of the issuer.

[16] ''Pre-Boarding Investments'' are investments in an issuer held by a Regulated Fund as well as one or more Affiliated Funds and/or one or more other Regulated Funds that were acquired prior to participating in any Co-Investment Transaction: (i) In transactions in which the only term negotiated by or on behalf of such funds was price in reliance on one of the JT No-Action Letters (defined below); or (ii) in transactions occurring at least 90 days apart and without coordination between the Regulated Fund and any Affiliated Fund or other Regulated Fund.

[17] A ''Pro Rata Follow-On Investment'' is a Follow-On Investment (i) in which the participation of each Affiliated Fund and each Regulated Fund is proportionate to its outstanding investments in the issuer or security, as appropriate, immediately preceding the Follow-On Investment, and (ii) in the case of a Regulated Fund, a majority of the Board has approved the Regulated Fund's participation in the pro rata Follow-On Investments as being in the best interests of the Regulated Fund. The Regulated Fund's Board may refuse to approve, or at any time rescind, suspend or qualify, its approval of Pro Rata Follow-On Investments, in which case all subsequent Follow-On Investments will be submitted to the Regulated Fund's Eligible Directors in accordance with Condition 8(c).

[18] A ''Non-Negotiated Follow-On Investment'' is a Follow-On Investment in which a Regulated Fund participates together with one or more Affiliated Funds and/or one or more other Regulated Funds (i) in which the only term negotiated by or on behalf of the funds is price and (ii) with respect to which, if the transaction were considered on its own, the funds would be entitled to rely on one of the JT No-Action Letters.

''JT No-Action Letters'' means SMC Capital, Inc., SEC No-Action Letter (pub. avail. Sept. 5, 1995) and Massachusetts Mutual Life Insurance Company, SEC No-Action Letter (pub. avail. June 7, 2000).

of any Adviser and thus do not warrant the time or the attention of the Board. Pro Rata Follow-On Investments and Non-Negotiated Follow-On Investments remain subject to the Board's periodic review in accordance with Condition 10.

C. Dispositions

16. Applicants propose that Dispositions [19] would be divided into two categories. If the Regulated Funds and Affiliated Funds holding investments in the issuer have previously participated in a Co-Investment Transaction with respect to the issuer, then the terms and approval of the Disposition would be subject to the Standard Review Dispositions described in Condition 6. If the Regulated Funds and Affiliated Funds have not previously participated in a Co-Investment Transaction with respect to the issuer but hold a Pre-Boarding Investment, then the terms and approval of the Disposition would be subject to the Enhanced Review Dispositions described in Condition 7. Subsequent Dispositions with respect to the same issuer would be governed by Condition 6 under the Standard Review Dispositions.[20]

17. A Regulated Fund may participate in a Standard Review Disposition either with the approval of the Required Majority under Condition 6(d) or without Board approval under Condition 6(c) if (i) the Disposition is a Pro Rata Disposition [21] or (ii) the securities are Tradable Securities [22] and the Disposition meets the other requirements of Condition 6(c)(ii). Pro Rata Dispositions and Dispositions of a Tradable Security remain subject to the Board's periodic review in accordance with Condition 10.

D. Delayed Settlement

18. Applicants represent that under the terms and Conditions of the application, all Regulated Funds and Affiliated Funds participating in a Co-Investment Transaction will invest at the same time, for the same price and with the same terms, conditions, class, registration rights and any other rights, so that none of them receives terms more favorable than any other. However, the settlement date for an Affiliated Fund in a Co-Investment Transaction may occur up to ten business days after the settlement date for the Regulated Fund, and vice versa. Nevertheless, in all cases, (i) the date on which the commitment of the Affiliated Funds and Regulated Funds is made will be the same even where the settlement date is not and (ii) the earliest settlement date and the latest settlement date of any Affiliated Fund or Regulated Fund participating in the transaction will occur within ten business days of each other.

E. Holders

19. Under Condition 15, if an Adviser, its principals, or any person controlling, controlled by, or under common control with the Adviser or its principals, and the Affiliated Funds (collectively, the ''Holders'') own in the aggregate more than 25 percent of the outstanding voting shares of a Regulated Fund (the ''Shares''), then the Holders will vote such Shares as directed by an independent third party when voting on matters specified in the Condition. Applicants believe that this Condition will ensure that the Independent Directors will act independently in evaluating Co-Investment Transactions, because the ability of the Adviser or its principals to influence the Independent Directors by a suggestion, explicit or implied, that the Independent Directors can be removed will be limited significantly. The Independent Directors shall evaluate and approve any independent party, taking into account its qualifications, reputation for independence, cost to the shareholders, and other factors that they deem relevant.

Applicants' Legal Analysis

1. Section 17(d) of the Act and rule 17d–1 under the Act prohibit participation by a registered investment company and an affiliated person in any ''joint enterprise or other joint arrangement or profit-sharing plan,'' as defined in the rule, without prior approval by the Commission by order upon application. Section 17(d) of the Act and rule 17d–1 under the Act are applicable to Regulated Funds that are registered closed-end investment companies.

2. Similarly, with regard to BDCs, section 57(a)(4) of the Act generally prohibits certain persons specified in section 57(b) from participating in joint transactions with the BDC or a company controlled by the BDC in contravention of rules as prescribed by the Commission. Section 57(i) of the Act provides that, until the Commission prescribes rules under section 57(a)(4), the Commission's rules under section 17(d) of the Act applicable to registered closed-end investment companies will be deemed to apply to transactions subject to section 57(a)(4). Because the Commission has not adopted any rules under section 57(a)(4), rule 17d–1 also applies to joint transactions with Regulated Funds that are BDCs.

3. Co-Investment Transactions are prohibited by either or both of rule 17d–1 and section 57(a)(4) without a prior exemptive order of the Commission to the extent that the Affiliated Funds and the Regulated Funds participating in such transactions fall within the category of persons described by rule 17d–1 and/or section 57(b), as modified by rule 57b–1 thereunder, as applicable, vis-à-vis each participating Regulated Fund. Each of the participating Regulated Funds and Affiliated Funds may be deemed to be affiliated persons vis-à-vis a Regulated Fund within the meaning of section 2(a)(3) by reason of common control because (i) Varagon manages the Existing Affiliated Fund and may be deemed to control the Existing Affiliated Fund, and an Adviser will advise (and sub-advise, if applicable) and will control any future Affiliated Fund, (ii) Varagon BDC Adviser or another Adviser is or will be

[19] ''Disposition'' means the sale, exchange or other disposition of an interest in a security of an issuer.

[20] However, with respect to an issuer, if a Regulated Fund's first Co-Investment Transaction is an Enhanced Review Disposition, and the Regulated Fund does not dispose of its entire position in the Enhanced Review Disposition, then before such Regulated Fund may complete its first Standard Review Follow-On in such issuer, the Eligible Directors must review the proposed Follow-On Investment not only on a stand-alone basis but also in relation to the total economic exposure in such issuer (*i.e.,* in combination with the portion of the Pre-Boarding Investment not disposed of in the Enhanced Review Disposition), and the other terms of the investments. This additional review is required because such findings were not required in connection with the prior Enhanced Review Disposition, but they would have been required had the first Co-Investment Transaction been an Enhanced Review Follow-On.

[21] A ''Pro Rata Disposition'' is a Disposition (i) in which the participation of each Affiliated Fund and each Regulated Fund is proportionate to its outstanding investment in the security subject to Disposition immediately preceding the Disposition; and (ii) in the case of a Regulated Fund, a majority of the Board has approved the Regulated Fund's participation in pro rata Dispositions as being in the best interests of the Regulated Fund. The Regulated Fund's Board may refuse to approve, or at any time rescind, suspend or qualify, its approval of Pro Rata Dispositions, in which case all subsequent Dispositions will be submitted to the Regulated Fund's Eligible Directors.

[22] ''Tradable Security'' means a security that meets the following criteria at the time of Disposition: (i) It trades on a national securities exchange or designated offshore securities market as defined in rule 902(b) under the Securities Act; (ii) it is not subject to restrictive agreements with the issuer or other security holders; and (iii) it trades with sufficient volume and liquidity (findings as to which are documented by the Advisers to any Regulated Funds holding investments in the issuer and retained for the life of the Regulated Fund) to allow each Regulated Fund to dispose of its entire position remaining after the proposed Disposition within a short period of time not exceeding 30 days at approximately the value (as defined by section 2(a)(41) of the Act) at which the Regulated Fund has valued the investment.

an investment adviser (and sub-adviser, if any) to each of the Regulated Funds, including Varagon BDC and may be deemed to control the Regulated Funds, and (iii) each BDC Downstream Fund will be deemed to be controlled by an Adviser, its parent BDC or certain of its parent BDC's subsidiaries. Thus, each of the Affiliated Funds could be deemed to be a person related to the BDC Regulated Funds, or the BDC Downstream Funds in a manner described by section 57(b) and related to the other Regulated Funds in a manner described by rule 17d–1; and therefore the prohibitions of rule 17d–1 and section 57(a)(4) would apply respectively to prohibit the Affiliated Funds from participating in Co-Investment Transactions with the Regulated Funds. Each Regulated Fund would also be related to each other Regulated Fund in a manner described by 57(b) or rule 17d–1, as applicable, and thus prohibited from participating in Co-Investment Transactions with each other. Further, because the BDC Downstream Funds and Wholly-Owned Investment Subs are controlled by the Regulated Funds, the BDC Downstream Funds and Wholly-Owned Investment Subs are subject to section 57(a)(4) (or section 17(d) in the case of Wholly-Owned Investment Subs controlled by Regulated Funds that are registered under the Act) and thus also subject to the provisions of rule 17d–1 and therefore would be prohibited from participating in Co-Investment Transactions.

4. In addition, because the Varagon Proprietary Accounts are controlled by Varagon, which is the parent company of Varagon BDC Adviser and, therefore, are under common control with the Regulated Funds, the Varagon Proprietary Accounts could be deemed to be persons related to the Regulated Funds (or a company controlled by the Regulated Funds) in a manner described by section 57(b) (or section 17(d) in the case of Regulated Funds that are registered under the Act) and also prohibited from participating in the Co-Investment Program.

5. In passing upon applications under rule 17d–1, the Commission considers whether the company's participation in the joint transaction is consistent with the provisions, policies, and purposes of the Act and the extent to which such participation is on a basis different from or less advantageous than that of other participants.

6. Applicants state that in the absence of the requested relief, in many circumstances the Regulated Funds would be limited in their ability to participate in attractive and appropriate investment opportunities. Applicants state that, as required by rule 17d–1(b), the Conditions ensure that the terms on which Co-Investment Transactions may be made will be consistent with the participation of the Regulated Funds being on a basis that it is neither different from nor less advantageous than other participants, thus protecting the equity holders of any participant from being disadvantaged. Applicants further state that the Conditions ensure that all Co-Investment Transactions are reasonable and fair to the Regulated Funds and their shareholders and do not involve overreaching by any person concerned, including the Advisers. Applicants state that the Regulated Funds' participation in the Co-Investment Transactions in accordance with the Conditions will be consistent with the provisions, policies, and purposes of the Act and would be done in a manner that is not different from, or less advantageous than, that of other participants.

Applicants' Conditions

Applicants agree that the Order shall be subject to the following Conditions:

1. *Identification and Referral of Potential Co-Investment Transactions.*

(a). The Advisers will establish, maintain and implement policies and procedures reasonably designed to ensure that each Adviser is promptly notified of all Potential Co-Investment Transactions that fall within the then-current Objectives and Strategies and Board-Established Criteria of any Regulated Fund the Adviser manages.

(b). When an Adviser to a Regulated Fund is notified of a Potential Co-Investment Transaction under Condition 1(a), the Adviser will make an independent determination of the appropriateness of the investment for the Regulated Fund in light of the Regulated Fund's then-current circumstances.

2. *Board Approvals of Co-Investment Transactions.*

(a). If the Adviser deems a Regulated Fund's participation in any Potential Co-Investment Transaction to be appropriate for the Regulated Fund, it will then determine an appropriate level of investment for the Regulated Fund.

(b). If the aggregate amount recommended by the Advisers to be invested in the Potential Co-Investment Transaction by the participating Regulated Funds and any participating Affiliated Funds, collectively, exceeds the amount of the investment opportunity, the investment opportunity will be allocated among them pro rata based on the size of the Internal Orders, as described in section III.A.1.b. of the application. Each Adviser to a participating Regulated Fund will promptly notify and provide the Eligible Directors with information concerning the Affiliated Funds' and Regulated Funds' order sizes to assist the Eligible Directors with their review of the applicable Regulated Fund's investments for compliance with these Conditions.

(c). After making the determinations required in Condition 1(b) above, each Adviser to a participating Regulated Fund will distribute written information concerning the Potential Co-Investment Transaction (including the amount proposed to be invested by each participating Regulated Fund and each participating Affiliated Fund) to the Eligible Directors of its participating Regulated Fund(s) for their consideration. A Regulated Fund will enter into a Co-Investment Transaction with one or more other Regulated Funds or Affiliated Funds only if, prior to the Regulated Fund's participation in the Potential Co-Investment Transaction, a Required Majority concludes that:

(i). The terms of the transaction, including the consideration to be paid, are reasonable and fair to the Regulated Fund and its equity holders and do not involve overreaching in respect of the Regulated Fund or its equity holders on the part of any person concerned;

(ii). the transaction is consistent with:

(A). The interests of the Regulated Fund's equity holders; and

(B). the Regulated Fund's then-current Objectives and Strategies;

(iii). the investment by any other Regulated Fund(s) or Affiliated Fund(s) would not disadvantage the Regulated Fund, and participation by the Regulated Fund would not be on a basis different from, or less advantageous than, that of any other Regulated Fund(s) or Affiliated Fund(s) participating in the transaction; provided that the Required Majority shall not be prohibited from reaching the conclusions required by this Condition 2(c)(iii) if:

(A). The settlement date for another Regulated Fund or an Affiliated Fund in a Co-Investment Transaction is later than the settlement date for the Regulated Fund by no more than ten business days or earlier than the settlement date for the Regulated Fund by no more than ten business days, in either case, so long as: (x) The date on which the commitment of the Affiliated Funds and Regulated Funds is made is the same; and (y) the earliest settlement date and the latest settlement date of any Affiliated Fund or Regulated Fund participating in the transaction will

occur within ten business days of each other; or

(B). any other Regulated Fund or Affiliated Fund, but not the Regulated Fund itself, gains the right to nominate a director for election to a portfolio company's board of directors, the right to have a board observer or any similar right to participate in the governance or management of the portfolio company so long as: (x) The Eligible Directors will have the right to ratify the selection of such director or board observer, if any; (y) the Adviser agrees to, and does, provide periodic reports to the Regulated Fund's Board with respect to the actions of such director or the information received by such board observer or obtained through the exercise of any similar right to participate in the governance or management of the portfolio company; and (z) any fees or other compensation that any other Regulated Fund or Affiliated Fund or any affiliated person of any other Regulated Fund or Affiliated Fund receives in connection with the right of one or more Regulated Funds or Affiliated Funds to nominate a director or appoint a board observer or otherwise to participate in the governance or management of the portfolio company will be shared proportionately among any participating Affiliated Funds (who may, in turn, share their portion with their affiliated persons) and any participating Regulated Fund(s) in accordance with the amount of each such party's investment; and

(iv). the proposed investment by the Regulated Fund will not involve compensation, remuneration or a direct or indirect [23] financial benefit to the Advisers, any other Regulated Fund, the Affiliated Funds or any affiliated person of any of them (other than the parties to the Co-Investment Transaction), except (A) to the extent permitted by Condition 14, (B) to the extent permitted by section 17(e) or 57(k), as applicable, (C) indirectly, as a result of an interest in the securities issued by one of the parties to the Co-Investment Transaction, or (D) in the case of fees or other compensation described in Condition 2(c)(iii)(B)(z).

3. *Right to Decline.* Each Regulated Fund has the right to decline to participate in any Potential Co-Investment Transaction or to invest less than the amount proposed.

4. *General Limitation.* Except for Follow-On Investments made in accordance with Conditions 8 and 9 below,[24] a Regulated Fund will not invest in reliance on the Order in any issuer in which a Related Party has an investment.[25]

5. *Same Terms and Conditions.* A Regulated Fund will not participate in any Potential Co-Investment Transaction unless (i) the terms, conditions, price, class of securities to be purchased, date on which the commitment is entered into and registration rights (if any) will be the same for each participating Regulated Fund and Affiliated Fund and (ii) the earliest settlement date and the latest settlement date of any participating Regulated Fund or Affiliated Fund will occur as close in time as practicable and in no event more than ten business days apart. The grant to one or more Regulated Funds or Affiliated Funds, but not the respective Regulated Fund, of the right to nominate a director for election to a portfolio company's board of directors, the right to have an observer on the board of directors or similar rights to participate in the governance or management of the portfolio company will not be interpreted so as to violate this Condition 5, if Condition 2(c)(iii)(B) is met.

6. *Standard Review Dispositions.*

(a). *General.* If any Regulated Fund or Affiliated Fund elects to sell, exchange or otherwise dispose of an interest in a security and one or more Regulated Funds and Affiliated Funds have previously participated in a Co-Investment Transaction with respect to the issuer, then:

(i). The Adviser to such Regulated Fund or Affiliated Fund [26] will notify each Regulated Fund that holds an investment in the issuer of the proposed Disposition at the earliest practical time; and

(ii). the Adviser to each Regulated Fund that holds an investment in the issuer will formulate a recommendation as to participation by such Regulated Fund in the Disposition.

(b). *Same Terms and Conditions.* Each Regulated Fund will have the right to participate in such Disposition on a proportionate basis, at the same price and on the same terms and conditions as those applicable to the Affiliated Funds and any other Regulated Fund.

(c). *No Board Approval Required.* A Regulated Fund may participate in such a Disposition without obtaining prior approval of the Required Majority if:

(i). (A) The participation of each Regulated Fund and Affiliated Fund in such Disposition is proportionate to its then-current holding of the security (or securities) of the issuer that is (or are) the subject of the Disposition; [27] (B) the Board of the Regulated Fund has approved as being in the best interests of the Regulated Fund the ability to participate in such Dispositions on a pro rata basis (as described in greater detail in the application); and (C) the Board of the Regulated Fund is provided on a quarterly basis with a list of all Dispositions made in accordance with this Condition; or

(ii). each security is a Tradable Security and (A) the Disposition is not to the issuer or any affiliated person of the issuer; and (B) the security is sold for cash in a transaction in which the only term negotiated by or on behalf of the participating Regulated Funds and Affiliated Funds is price.

(d). *Standard Board Approval.* In all other cases, the Adviser will provide its written recommendation as to the Regulated Fund's participation to the Eligible Directors and the Regulated Fund will participate in such Disposition solely to the extent that a Required Majority determines that it is in the Regulated Fund's best interests.

7. *Enhanced Review Dispositions.*

(a). *General.* If any Regulated Fund or Affiliated Fund elects to sell, exchange or otherwise dispose of a Pre-Boarding Investment in a Potential Co-Investment Transaction and the Regulated Funds and Affiliated Funds have not previously participated in a Co-Investment Transaction with respect to the issuer:

(i). The Adviser to such Regulated Fund or Affiliated Fund will notify each Regulated Fund that holds an

[23] For example, procuring the Regulated Fund's investment in a Potential Co-Investment Transaction to permit an affiliate to complete or obtain better terms in a separate transaction would constitute an indirect financial benefit.

[24] This exception applies only to Follow-On Investments by a Regulated Fund in issuers in which that Regulated Fund already holds investments.

[25] ''Related Party'' means (i) any Close Affiliate and (ii) in respect of matters as to which any Adviser has knowledge, any Remote Affiliate.

''Close Affiliate'' means the Advisers, the Regulated Funds, the Affiliated Funds and any other person described in section 57(b) (after giving effect to rule 57b–1) in respect of any Regulated Fund (treating any registered investment company or series thereof as a BDC for this purpose) except for limited partners included solely by reason of the reference in section 57(b) to section 2(a)(3)(D).

''Remote Affiliate'' means any person described in section 57(e) in respect of any Regulated Fund (treating any registered investment company or series thereof as a BDC for this purpose) and any limited partner holding 5% or more of the relevant limited partner interests that would be a Close Affiliate but for the exclusion in that definition.

[26] Any Varagon Proprietary Account that is not advised by an Adviser is itself deemed to be an Adviser for purposes of Conditions 6(a)(i), 7(a)(i), 8(a)(i) and 9(a)(i).

[27] In the case of any Disposition, proportionality will be measured by each participating Regulated Fund's and Affiliated Fund's outstanding investment in the security in question immediately preceding the Disposition.

investment in the issuer of the proposed Disposition at the earliest practical time;

(ii). the Adviser to each Regulated Fund that holds an investment in the issuer will formulate a recommendation as to participation by such Regulated Fund in the Disposition; and

(iii). the Advisers will provide to the Board of each Regulated Fund that holds an investment in the issuer all information relating to the existing investments in the issuer of the Regulated Funds and Affiliated Funds, including the terms of such investments and how they were made, that is necessary for the Required Majority to make the findings required by this Condition.

(b). *Enhanced Board Approval.* The Adviser will provide its written recommendation as to the Regulated Fund's participation to the Eligible Directors, and the Regulated Fund will participate in such Disposition solely to the extent that a Required Majority determines that:

(i). The Disposition complies with Condition 2(c)(i), (ii), (iii)(A), and (iv); and

(ii). the making and holding of the Pre-Boarding Investments were not prohibited by section 57 or rule 17d–1, as applicable, and records the basis for the finding in the Board minutes.

(c). *Additional Requirements:* The Disposition may only be completed in reliance on the Order if:

(i). *Same Terms and Conditions.* Each Regulated Fund has the right to participate in such Disposition on a proportionate basis, at the same price and on the same terms and Conditions as those applicable to the Affiliated Funds and any other Regulated Fund;

(ii). *Original Investments.* All of the Affiliated Funds' and Regulated Funds' investments in the issuer are Pre-Boarding Investments;

(iii). *Advice of counsel.* Independent counsel to the Board advises that the making and holding of the investments in the Pre-Boarding Investments were not prohibited by section 57 (as modified by rule 57b–1) or rule 17d–1, as applicable;

(iv). *Multiple Classes of Securities.* All Regulated Funds and Affiliated Funds that hold Pre-Boarding Investments in the issuer immediately before the time of completion of the Co-Investment Transaction hold the same security or securities of the issuer. For the purpose of determining whether the Regulated Funds and Affiliated Funds hold the same security or securities, they may disregard any security held by some but not all of them if, prior to relying on the Order, the Required Majority is presented with all information necessary to make a finding, and finds, that: (x) Any Regulated Fund's or Affiliated Fund's holding of a different class of securities (including for this purpose a security with a different maturity date) is immaterial [28] in amount, including immaterial relative to the size of the issuer; and (y) the Board records the basis for any such finding in its minutes. In addition, securities that differ only in respect of issuance date, currency, or denominations may be treated as the same security; and

(v). *No control.* The Affiliated Funds, the other Regulated Funds and their affiliated persons (within the meaning of section 2(a)(3)(C) of the Act), individually or in the aggregate, do not control the issuer of the securities (within the meaning of section 2(a)(9) of the Act).

8. *Standard Review Follow-Ons.*

(a). *General.* If any Regulated Fund or Affiliated Fund desires to make a Follow-On Investment in an issuer and the Regulated Funds and Affiliated Funds holding investments in the issuer previously participated in a Co-Investment Transaction with respect to the issuer:

(i). The Adviser to each such Regulated Fund or Affiliated Fund will notify each Regulated Fund that holds securities of the portfolio company of the proposed transaction at the earliest practical time; and

(ii). the Adviser to each Regulated Fund that holds an investment in the issuer will formulate a recommendation as to the proposed participation, including the amount of the proposed investment, by such Regulated Fund.

(b). *No Board Approval Required.* A Regulated Fund may participate in the Follow-On Investment without obtaining prior approval of the Required Majority if:

(i). (A) The proposed participation of each Regulated Fund and each Affiliated Fund in such investment is proportionate to its outstanding investments in the issuer or the security at issue, as appropriate,[29] immediately preceding the Follow-On Investment; and (B) the Board of the Regulated Fund has approved as being in the best interests of the Regulated Fund the ability to participate in Follow-On Investments on a pro rata basis (as described in greater detail in the application); or

(ii). it is a Non-Negotiated Follow-On Investment.

(c). *Standard Board Approval.* In all other cases, the Adviser will provide its written recommendation as to the Regulated Fund's participation to the Eligible Directors and the Regulated Fund will participate in such Follow-On Investment solely to the extent that a Required Majority makes the determinations set forth in Condition 2(c). If the only previous Co-Investment Transaction with respect to the issuer was an Enhanced Review Disposition the Eligible Directors must complete this review of the proposed Follow-On Investment both on a stand-alone basis and together with the Pre-Boarding Investments in relation to the total economic exposure and other terms of the investment.

(d). *Allocation.* If, with respect to any such Follow-On Investment:

(i). The amount of the opportunity proposed to be made available to any Regulated Fund is not based on the Regulated Funds' and the Affiliated Funds' outstanding investments in the issuer or the security at issue, as appropriate, immediately preceding the Follow-On Investment; and

(ii). the aggregate amount recommended by the Advisers to be invested in the Follow-On Investment by the participating Regulated Funds and any participating Affiliated Funds, collectively, exceeds the amount of the investment opportunity, then the Follow-On Investment opportunity will be allocated among them pro rata based on the size of the Internal Orders, as described in section III.A.1.b. of the application.

(e). *Other Conditions.* The acquisition of Follow-On Investments as permitted by this Condition will be considered a Co-Investment Transaction for all purposes and subject to the other Conditions set forth in the application.

9. *Enhanced Review Follow-Ons.*

(a). *General.* If any Regulated Fund or Affiliated Fund desires to make a

[28] In determining whether a holding is ''immaterial'' for purposes of the Order, the Required Majority will consider whether the nature and extent of the interest in the transaction or arrangement is sufficiently small that a reasonable person would not believe that the interest affected the determination of whether to enter into the transaction or arrangement or the terms of the transaction or arrangement.

[29] To the extent that a Follow-On Investment opportunity is in a security or arises in respect of a security held by the participating Regulated Funds and Affiliated Funds, proportionality will be measured by each participating Regulated Fund's and Affiliated Fund's outstanding investment in the security in question immediately preceding the Follow-On Investment using the most recent available valuation thereof. To the extent that a Follow-On Investment opportunity relates to an opportunity to invest in a security that is not in respect of any security held by any of the participating Regulated Funds or Affiliated Funds, proportionality will be measured by each participating Regulated Fund's and Affiliated Fund's outstanding investment in the issuer immediately preceding the Follow-On Investment using the most recent available valuation thereof.

Follow-On Investment in an issuer that is a Potential Co-Investment Transaction and the Regulated Funds and Affiliated Funds holding investments in the issuer have not previously participated in a Co-Investment Transaction with respect to the issuer:

(i). The Adviser to each such Regulated Fund or Affiliated Fund will notify each Regulated Fund that holds securities of the portfolio company of the proposed transaction at the earliest practical time;

(ii). the Adviser to each Regulated Fund that holds an investment in the issuer will formulate a recommendation as to the proposed participation, including the amount of the proposed investment, by such Regulated Fund; and

(iii). the Advisers will provide to the Board of each Regulated Fund that holds an investment in the issuer all information relating to the existing investments in the issuer of the Regulated Funds and Affiliated Funds, including the terms of such investments and how they were made, that is necessary for the Required Majority to make the findings required by this Condition.

(b). *Enhanced Board Approval.* The Adviser will provide its written recommendation as to the Regulated Fund's participation to the Eligible Directors, and the Regulated Fund will participate in such Follow-On Investment solely to the extent that a Required Majority reviews the proposed Follow-On Investment both on a stand-alone basis and together with the Pre-Boarding Investments in relation to the total economic exposure and other terms and makes the determinations set forth in Condition 2(c). In addition, the Follow-On Investment may only be completed in reliance on the Order if the Required Majority of each participating Regulated Fund determines that the making and holding of the Pre-Boarding Investments were not prohibited by section 57 (as modified by rule 57b–1) or rule 17d–1, as applicable. The basis for the Board's findings will be recorded in its minutes.

(c). *Additional Requirements.* The Follow-On Investment may only be completed in reliance on the Order if:

(i). *Original Investments.* All of the Affiliated Funds' and Regulated Funds' investments in the issuer are Pre-Boarding Investments;

(ii). *Advice of counsel.* Independent counsel to the Board advises that the making and holding of the investments in the Pre-Boarding Investments were not prohibited by section 57 (as modified by rule 57b–1) or rule 17d–1, as applicable;

(iii). *Multiple Classes of Securities.* All Regulated Funds and Affiliated Funds that hold Pre-Boarding Investments in the issuer immediately before the time of completion of the Co-Investment Transaction hold the same security or securities of the issuer. For the purpose of determining whether the Regulated Funds and Affiliated Funds hold the same security or securities, they may disregard any security held by some but not all of them if, prior to relying on the Order, the Required Majority is presented with all information necessary to make a finding, and finds, that: (x) Any Regulated Fund's or Affiliated Fund's holding of a different class of securities (including for this purpose a security with a different maturity date) is immaterial in amount, including immaterial relative to the size of the issuer; and (y) the Board records the basis for any such finding in its minutes. In addition, securities that differ only in respect of issuance date, currency, or denominations may be treated as the same security; and

(iv). *No control.* The Affiliated Funds, the other Regulated Funds and their affiliated persons (within the meaning of section 2(a)(3)(C) of the Act), individually or in the aggregate, do not control the issuer of the securities (within the meaning of section 2(a)(9) of the Act).

(d). *Allocation.* If, with respect to any such Follow-On Investment:

(i). The amount of the opportunity proposed to be made available to any Regulated Fund is not based on the Regulated Funds' and the Affiliated Funds' outstanding investments in the issuer or the security at issue, as appropriate, immediately preceding the Follow-On Investment; and

(ii). the aggregate amount recommended by the Advisers to be invested in the Follow-On Investment by the participating Regulated Funds and any participating Affiliated Funds, collectively, exceeds the amount of the investment opportunity, then the Follow-On Investment opportunity will be allocated among them pro rata based on the size of the Internal Orders, as described in section III.A.1.b. of the application.

(e). *Other Conditions.* The acquisition of Follow-On Investments as permitted by this Condition will be considered a Co-Investment Transaction for all purposes and subject to the other Conditions set forth in the application.

10. *Board Reporting, Compliance and Annual Re-Approval.*

(a). Each Adviser to a Regulated Fund will present to the Board of each Regulated Fund, on a quarterly basis, and at such other times as the Board may request, (i) a record of all investments in Potential Co-Investment Transactions made by any of the other Regulated Funds or any of the Affiliated Funds during the preceding quarter that fell within the Regulated Fund's then-current Objectives and Strategies and Board-Established Criteria that were not made available to the Regulated Fund, and an explanation of why such investment opportunities were not made available to the Regulated Fund; (ii) a record of all Follow-On Investments in and Dispositions of investments in any issuer in which the Regulated Fund holds any investments by any Affiliated Fund or other Regulated Fund during the prior quarter; and (iii) all information concerning Potential Co-Investment Transactions and Co-Investment Transactions, including investments made by other Regulated Funds or Affiliated Funds that the Regulated Fund considered but declined to participate in, so that the Independent Directors, may determine whether all Potential Co-Investment Transactions and Co-Investment Transactions during the preceding quarter, including those investments that the Regulated Fund considered but declined to participate in, comply with the Conditions.

(b). All information presented to the Regulated Fund's Board pursuant to this Condition will be kept for the life of the Regulated Fund and at least two years thereafter, and will be subject to examination by the Commission and its staff.

(c). Each Regulated Fund's chief compliance officer, as defined in rule 38a–1(a)(4), will prepare an annual report for its Board each year that evaluates (and documents the basis of that evaluation) the Regulated Fund's compliance with the terms and Conditions of the application and the procedures established to achieve such compliance. In the case of a BDC Downstream Fund that does not have a chief compliance officer, the chief compliance officer of the BDC that controls the BDC Downstream Fund will prepare the report for the relevant Independent Party.

(d). The Independent Directors (including the non-interested members of each Independent Party) will consider at least annually whether continued participation in new and existing Co-Investment Transactions is in the Regulated Fund's best interests.

11. *Record Keeping.* Each Regulated Fund will maintain the records required by section 57(f)(3) of the Act as if each of the Regulated Funds were a BDC and each of the investments permitted under

these Conditions were approved by the Required Majority under section 57(f).

12. *Director Independence.* No Independent Director (including the non-interested members of any Independent Party) of a Regulated Fund will also be a director, general partner, managing member or principal, or otherwise be an ''affiliated person'' (as defined in the Act) of any Affiliated Fund.

13. *Expenses.* The expenses, if any, associated with acquiring, holding or disposing of any securities acquired in a Co-Investment Transaction (including, without limitation, the expenses of the distribution of any such securities registered for sale under the Securities Act) will, to the extent not payable by the Advisers under their respective advisory agreements with the Regulated Funds and the Affiliated Funds, be shared by the Regulated Funds and the participating Affiliated Funds in proportion to the relative amounts of the securities held or being acquired or disposed of, as the case may be.

14. *Transaction Fees.*[30] Any transaction fee (including break-up, structuring, monitoring or commitment fees but excluding brokerage or underwriting compensation permitted by section 17(e) or 57(k)) received in connection with any Co-Investment Transaction will be distributed to the participants on a pro rata basis based on the amounts they invested or committed, as the case may be, in such Co-Investment Transaction. If any transaction fee is to be held by an Adviser pending consummation of the transaction, the fee will be deposited into an account maintained by the Adviser at a bank or banks having the qualifications prescribed in section 26(a)(1), and the account will earn a competitive rate of interest that will also be divided pro rata among the participants. None of the Advisers, the Affiliated Funds, the other Regulated Funds or any affiliated person of the Affiliated Funds or the Regulated Funds will receive any additional compensation or remuneration of any kind as a result of or in connection with a Co-Investment Transaction other than (i) in the case of the Regulated Funds and the Affiliated Funds, the pro rata transaction fees described above and fees or other compensation described in Condition 2(c)(iii)(B)(z), (ii) brokerage or underwriting compensation permitted by section 17(e) or 57(k) or (iii) in the case of the Advisers, investment advisory compensation paid in accordance with investment advisory agreements between the applicable Regulated Fund(s) or Affiliated Fund(s) and its Adviser.

15. *Independence.* If the Holders own in the aggregate more than 25 percent of the Shares of a Regulated Fund, then the Holders will vote such Shares as directed by an independent third party when voting on (1) the election of directors; (2) the removal of one or more directors; or (3) any other matter under either the Act or applicable State law affecting the Board's composition, size or manner of election.

For the Commission, by the Division of Investment Management, under delegated authority.

J. Matthew DeLesDernier,

Assistant Secretary.

[FR Doc. 2020–11035 Filed 5–21–20; 8:45 am]

BILLING CODE 8011–01–P

[30] Applicants are not requesting and the Commission is not providing any relief for transaction fees received in connection with any Co-Investment Transaction.

SECURITIES AND EXCHANGE COMMISSION

[Release No. 34–88892; File No. SR–BOX–2020–12]

Self-Regulatory Organizations; BOX Exchange LLC; Notice of Filing and Immediate Effectiveness of a Proposed Rule Change To Amend BOX Rule 7270 (Block Trades) To Add an Automatic Matching Feature to the Facilitation Auction Mechanism

May 18, 2020.

Pursuant to Section 19(b)(1) of the Securities Exchange Act of 1934 (''Act''),[1] and Rule 19b–4 thereunder,[2] notice is hereby given that on May 7, 2020, BOX Exchange LLC (the ''Exchange'') filed with the Securities and Exchange Commission (''Commission'') the proposed rule change as described in Items I and II below, which Items have been prepared by the self-regulatory organization. The Commission is publishing this notice to solicit comments on the proposed rule from interested persons.

I. Self-Regulatory Organization's Statement of the Terms of Substance of the Proposed Rule Change

The Exchange proposes to amend BOX Rule 7270 (Block Trades) to add an automatic matching feature to the Facilitation Auction mechanism. The text of the proposed rule change is available from the principal office of the Exchange, at the Commission's Public Reference Room and also on the Exchange's internet website at *http://boxoptions.com.*

[1] 15 U.S.C. 78s(b)(1).

[2] 17 CFR 240.19b–4.

II. Self-Regulatory Organization's Statement of the Purpose of, and Statutory Basis for, the Proposed Rule Change

In its filing with the Commission, the self-regulatory organization included statements concerning the purpose of, and basis for, the proposed rule change and discussed any comments it received on the proposed rule change. The text of these statements may be examined at the places specified in Item IV below. The self-regulatory organization has prepared summaries, set forth in Sections A, B, and C below, of the most significant aspects of such statements.

A. Self-Regulatory Organization's Statement of the Purpose of, and Statutory Basis for, the Proposed Rule Change

1. Purpose

The purpose of the proposed rule change is to amend Rule 7270 to add an automatic matching feature to the Facilitation Auction mechanism.

Currently, BOX's Facilitation Auction mechanism allows members to enter two-sided orders for execution with the possibility of the Agency Order receiving price improvement.[3] In this mechanism, an Agency Order is submitted to BOX by the Facilitating Participant with a matching guaranteed contra-side order (''Facilitation Order'') equal to the full size of the Agency Order. The agency side of this two-sided order is then exposed to market participants during a one-second auction to give them an opportunity to compete so that they may participate in the execution of the Agency Order.

The Exchange now proposes to adopt auto-match functionality to the Facilitation Auction mechanism. Upon entry of an order into the Facilitation Mechanism, the Facilitating Participant can elect to automatically match the price and size of orders, quotes and responses received during the exposure period up to a specified limit price or without specifying a limit price (''auto-match''). In this case, the Facilitating Participant will be allocated its full size at each price point, or at each price point within its limit price if a limit is specified, until a price point is reached where the balance of the order can be fully executed. At such price point, the Facilitating Participant shall be allocated at least forty percent (40%) of the original size of the facilitation order, but only after Public Customer interest

[3] *See* BOX Rule 7270(a) (Facilitation Auction mechanism).

at such price point. Thereafter, all other orders, Responses, and quotes at the facilitation price will participate in the execution of the Agency Order based upon price/time priority. Further, the Exchange proposes that an election to automatically match better prices cannot be cancelled or altered during the exposure period.

Under the proposal, if a Facilitating Participant elects to use the auto-match feature, the Facilitation Order will be allocated its full size at each price level where there are competing quotes or orders, up to the auto-match limit if one is specified, until a price level is reached where the balance of the Agency Order can be fully executed. At such price level, the Facilitation order will be allocated the greater of one contract or 40% of the size of the Agency Order after Public Customers. The following examples illustrate how the proposed auto-match feature will operate in the Facilitation Auction mechanism.

Assume the NBBO is $10.60 bid and $10.70 offered. An Agency Order to sell 50 contracts at $10.65 is entered into the Facilitation Mechanism by the Facilitating Participant with a Facilitation Order that has an auto-match limit of $10.70:

- If one Response is received for 20 contracts to buy at $10.70, the Agency Order will execute against 40 contracts at $10.70 (20 against the Response and 20 against the Facilitation Order) and 10 contracts at $10.65 (against the Facilitation Order).

In the same scenario above, with multiple Responses, the Facilitating Participant will be allocated its full size at each price point, or at each price point within its limit price if a limit is specified, until a price point is reached where the balance of the order can be fully executed. At such price point, the facilitating Participant shall be allocated at least forty percent (40%) of the original size of the facilitation order, but only after Public Customer interest at such price point.[4]

- If Response 1 is for 20 contracts to buy at $10.70 and Response 2 and Response 3 are for 5 contracts (each respectively) to buy at $10.65 (Response 2 is a Broker Dealer and Response 3 is a Market Maker), the Agency Order will execute against 40 contracts at $10.70 (20 against Response 1 and 20 contracts against the Facilitation Order) and 10 contracts at $10.65 against the Facilitation Order.
- If Response 1 is for 20 contracts to buy at $10.70 and Response 2 and Response 3 are for 5 contracts (each respectively) to buy at $10.65 (Response 2 is a Public Customer and Response 3 is a Broker Dealer), the Agency Order will execute against: 40 Contracts at $10.70 (20 contracts against Response 1 and 20 contracts against the Facilitation Order), 5 contracts at $10.65 against Response 2 (Public Customer Response), and then the remaining 5 contracts at $10.65 against the Facilitation Order.

Under the current rules, the Agency Order in the examples would sell 20 contracts at $10.70 and the remaining contracts at $10.65. Thus, the proposed auto-match feature will benefit the Agency Order because it sells an additional 20 contracts at the better price.

The Exchange notes that the Facilitation Auction mechanism allows for broad participation in its competitive auctions by all types of market participants (*e.g.,* Public Customers, Broker-Dealers, and Market Makers). All market participants are able to receive the auction broadcast and may respond by submitting competing interest (*i.e.,* responses, orders and quotes). All Agency Orders entered into the mechanisms will continue to be broadly exposed in the auction before the Facilitating Participant can execute against the Agency Order via the auto-match feature.

The Exchange notes that when the Facilitating Participant selects the auto-match feature prior to the start of an auction, the available liquidity at improved prices is increased and competitive final pricing is out of the Facilitating Participant's control. The Exchange believes that the proposal will increase competition in the auctions, will provide more options contracts with price improvement and incent market participants to initiate more auctions with the auto-match feature. Increases in the number of auctions initiated on the Exchange using the Facilitation Auction mechanism will directly correlate with an increase in the number of Agency Orders that are provided with the opportunity to receive price improvement over the NBBO.

The Exchange also notes that this auto-match feature has been implemented by another options exchange with respect to their facilitation auction mechanism.[5]

2. Statutory Basis

The Exchange believes that the proposal is consistent with the requirements of Section 6(b) of the Act,[6] in general, and Section 6(b)(5) of the Act,[7] in particular, that an exchange have rules that are designed to promote just and equitable principles of trade, and to remove impediments to and perfect the mechanism for a free and open market and a national market system, and in general, to protect investors and the public interest. In particular, the Exchange believes that the proposal will result in additional liquidity available at improved prices with competitive final pricing out of the Facilitating Participant's control, thus increasing competition in the Facilitation auctions and providing more options contracts with price improvement. As a result of the increased opportunity for price improvement, the Exchange believes that market participants will be incented to initiate more Facilitation auctions. Increases in the number of auctions will directly correlate with an increase in the number of customer orders that are provided with the opportunity to receive price improvement over the NBBO. Further, the Exchange notes that similar functionality currently exists at another options exchange in the industry.[8]

B. Self-Regulatory Organization's Statement on Burden on Competition

This proposed rule change does not impose any burden on competition that is not necessary or appropriate in furtherance of the purposes of the Act. The proposed functionality, which is similar to functionality offered on another exchange, is voluntary and the Exchange therefore does not believe that providing this functionality will have any significant impact on competition. Further, the Exchange believes that the proposed change is evidence of the competitive environment in the options industry where exchanges must continually improve their offerings to maintain competitive standing. As such, the Exchange does not believe that the proposed rule change will impose any burden on competition not necessary or

[4] *See* Proposed Rule 7270(a)(4).

[5] *See* Nasdaq ISE (''ISE'') Rule Options 3, Section 11(b)(C). The Exchange notes a minor difference between the proposed rule discussed herein and ISE's rule. ISE's rule states that ''. . . thereafter, all other orders, Responses, and quotes at the price point will participate in the execution of the facilitation order based upon the percentage of the total number of contracts available at the facilitation price that is represented by the size of the order, Response or quote.'' The Exchange notes that ISE is a pro-rata allocation exchange which is reflected by the rule text discussed above. Further, BOX is a price/time priority exchange. As such, the Exchange believes it is appropriate to reflect the use of price/time priority, not pro-rata, in the proposed change.

[6] 15 U.S.C. 78f(b).

[7] 15 U.S.C. 78f(b)(5).

[8] *See supra* note 5.

appropriate in furtherance of the purposes of the Act.

C. Self-Regulatory Organization's Statement on Comments on the Proposed Rule Change Received From Members, Participants, or Others

The Exchange has neither solicited nor received comments on the proposed rule change.

III. Date of Effectiveness of the Proposed Rule Change and Timing for Commission Action

Because the foregoing proposed rule change does not: (i) Significantly affect the protection of investors or the public interest; (ii) impose any significant burden on competition; and (iii) become operative for 30 days from the date on which it was filed, or such shorter time as the Commission may designate, it has become effective pursuant to Section 19(b)(3)(A)(iii) of the Act [9] and subparagraph (f)(6) of Rule 19b–4 thereunder.[10]

A proposed rule change filed under Rule 19b–4(f)(6) normally does not become operative for 30 days from the date of filing. However, Rule 19b–4(f)(6)(iii) [11] permits the Commission to designate a shorter time if such action is consistent with the protection of investors and the public interest. The Exchange has asked the Commission to waive the 30-day operative delay. The Commission notes that waiver of the operative delay would allow the Exchange to provide the auto-match functionality immediately available to Participants. The Commission also notes that the proposed rule change is substantially similar to functionality on another options exchange.[12] For these reasons, the Commission believes that waiver of the 30-day operative delay is consistent with the protection of investors and the public interest. Accordingly, the Commission waives the 30-day operative delay and designates the proposed rule change operative upon filing.[13]

At any time within 60 days of the filing of the proposed rule change, the Commission summarily may temporarily suspend such rule change if it appears to the Commission that such action is necessary or appropriate in the public interest, for the protection of investors, or otherwise in furtherance of the purposes of the Act. If the Commission takes such action, the Commission shall institute proceedings to determine whether the proposed rule should be approved or disapproved.

IV. Solicitation of Comments

Interested persons are invited to submit written data, views, and arguments concerning the foregoing, including whether the proposed rule change is consistent with the Act. Comments may be submitted by any of the following methods:

Electronic Comments

- Use the Commission's internet comment form (*http://www.sec.gov/rules/sro.shtml*); or
- Send an email to *rule-comments@sec.gov.* Please include File Number SR–BOX–2020–12 on the subject line.

Paper Comments

- Send paper comments in triplicate to Secretary, Securities and Exchange Commission, 100 F Street NE, Washington, DC 20549–1090.

All submissions should refer to File Number SR–BOX–2020–12. This file number should be included on the subject line if email is used. To help the Commission process and review your comments more efficiently, please use only one method. The Commission will post all comments on the Commission's internet website (*http://www.sec.gov/rules/sro.shtml*). Copies of the submission, all subsequent amendments, all written statements with respect to the proposed rule change that are filed with the Commission, and all written communications relating to the proposed rule change between the Commission and any person, other than those that may be withheld from the public in accordance with the provisions of 5 U.S.C. 552, will be available for website viewing and printing in the Commission's Public Reference Room, 100 F Street NE, Washington, DC 20549, on official business days between the hours of 10:00 a.m. and 3:00 p.m. Copies of the filing also will be available for inspection and copying at the principal office of the Exchange. All comments received will be posted without change. Persons submitting comments are cautioned that we do not redact or edit personal identifying information from comment submissions. You should submit only information that you wish to make available publicly. All submissions should refer to File Number SR–BOX–2020–12, and should be submitted on or before June 12, 2020.

For the Commission, by the Division of Trading and Markets, pursuant to delegated authority.[14]

J. Matthew DeLesDernier,

Assistant Secretary.

[FR Doc. 2020–11039 Filed 5–21–20; 8:45 am]

BILLING CODE 8011–01–P

[9] 15 U.S.C. 78s(b)(3)(A)(iii).

[10] 17 CFR 240.19b–4(f)(6). In addition, Rule 19b–4(f)(6) requires a self-regulatory organization to give the Commission written notice of its intent to file the proposed rule change at least five business days prior to the date of filing of the proposed rule change, or such shorter time as designated by the Commission. The Exchange has satisfied this requirement.

[11] 17 CFR 240.19b–4(f)(6)(iii).

[12] *See supra* note 5.

[13] For purposes only of waiving the 30-day operative delay, the Commission has also considered the proposed rule's impact on efficiency, competition, and capital formation. *See* 15 U.S.C. 78c(f).

[14] 17 CFR 200.30–3(a)(12).

SECURITIES AND EXCHANGE COMMISSION

[Release No. 34–88894; File No. SR–BOX–2020–13]

Self-Regulatory Organizations; BOX Exchange LLC; Notice of Filing and Immediate Effectiveness of a Proposed Rule Change To Amend IM–3120–2 to BOX Rule 3120 (''Position Limits'') To Increase Position Limits for Options on Certain Exchange-Traded Funds (''ETFs''), and Thereby Similarly Increase Exercise Limits Under IM–3140–1 for Certain ETFs

May 18, 2020.

Pursuant to Section 19(b)(1) of the Securities Exchange Act of 1934 (''Act''),[1] and Rule 19b–4 thereunder,[2] notice is hereby given that on May 7, 2020, BOX Exchange LLC (the ''Exchange'') filed with the Securities and Exchange Commission (''Commission'') the proposed rule change as described in Items I and II below, which Items have been prepared by the self-regulatory organization. The Commission is publishing this notice to solicit comments on the proposed rule change from interested persons.

I. Self-Regulatory Organization's Statement of the Terms of the Substance of the Proposed Rule Change

The Exchange proposes to amend IM–3120–2 to BOX Rule 3120 (''Position Limits'') to increase position limits for options on certain exchange-traded funds (''ETFs''), and thereby similarly increase exercise limits under IM–3140–1 for certain ETFs. The text of the proposed rule change is available from the principal office of the Exchange, at the Commission's Public Reference Room and also on the Exchange's internet website at *http://boxoptions.com.*

[1] 15 U.S.C. 78s(b)(1).

[2] 17 CFR 240.19b–4.

II. Self-Regulatory Organization's Statement of the Purpose of, and Statutory Basis for, the Proposed Rule Change

In its filing with the Commission, the self-regulatory organization included statements concerning the purpose of, and basis for, the proposed rule change and discussed any comments it received on the proposed rule change. The text of these statements may be examined at the places specified in Item IV below. The self-regulatory organization has prepared summaries, set forth in Sections A, B, and C below, of the most significant aspects of such statements.

A. Self-Regulatory Organization's Statement of the Purpose of, and Statutory Basis for, the Proposed Rule Change

1. Purpose

The Exchange proposes to amend IM–3120–2 to BOX Rule 3120 (''Position Limits'') to increase the position limits for options on the following exchange trade funds (''ETFs''): Standard and Poor's Depositary Receipts Trust (''SPY''), iShares MSCI EAFE ETF (''EFA''), iShares China Large-Cap ETF (''FXI''), iShares iBoxx High Yield Corporate Bond Fund (''HYG''), and Financial Select Sector SPDR Fund (''XLF''). This is a competitive filing that is based on a proposal recently submitted by the Chicago Board Options Exchange Incorporated (''Cboe'') and approved by the Commission.[3]

Position limits are designed to address potential manipulative schemes and adverse market impacts surrounding the use of options, such as disrupting the market in the security underlying the options. While position limits should address and discourage the potential for manipulative schemes and adverse market impact, if such limits are set too low, participation in the options market may be discouraged. The Exchange believes that position limits must therefore be balanced between mitigating concerns of any potential manipulation and the cost of inhibiting potential hedging activity that could be used for legitimate economic purposes.

According to Cboe, market participants have increased their demand for options on SPY, EFA, FXI, HYG, and XLF (collectively, the ''Underlying ETFs'') for both trading and hedging purposes.[4] Cboe noted that although the demand for these options appears to have increased, position limits for options on the Underlying ETFs have remained the same. The Exchange believes these unchanged position limits may have impeded, and may continue to impede, trading activity and strategies of investors, such as use of effective hedging vehicles or income generating strategies (*e.g.,* buy-write or put-write), and the ability of Market-Makers to make liquid markets with tighter spreads in these options resulting in the transfer of volume to over-the-counter (''OTC'') markets. OTC transactions occur through bilateral agreements, the terms of which are not publically disclosed to the marketplace. As such, OTC transactions do not contribute to the price discovery process on a public exchange or other lit markets. Therefore, the Exchange believes that the proposed increases in position limits for options on the Underlying ETFs may enable liquidity providers to provide additional liquidity to the Exchange and other market participants to transfer their liquidity demands from OTC markets to the Exchange, as well as other options exchange on which they participate. As described in further detail below, the Exchange believes that the continuously increasing market capitalization of the Underlying ETFs and ETF component securities, as well as the highly liquid markets for those securities, reduces the concerns for potential market manipulation and/or disruption in the underlying markets upon increasing position limits, while the rising demand for trading options on the Underlying ETFs for legitimate economic purposes compels an increase in position limits.

Proposed Position Limits for Options on the Underlying ETFs

Position limits for options on ETFs are determined pursuant to Rule 3120, and vary according to the number of outstanding shares and the trading volumes of the underlying stocks or ETFs over the past six months. Pursuant to Exchange Rule 3120, the largest in capitalization and the most frequently traded stocks and ETFs have an option position limit of 250,000 contracts (with adjustments for splits, re-capitalizations, etc.) on the same side of the market; and smaller capitalization stocks and ETFs have position limits of 200,000, 75,000, 50,000 or 25,000 contracts (with adjustments for splits, re-capitalizations, etc.) on the same side of the market. Options on HYG and XLF are currently subject to the standard position limit of 250,000 contracts as set forth in Exchange Rule 3120. Rule IM–3120–2 sets forth separate position limits for options on specific ETFs, including SPY, FXI, and EFA. In addition, BOX Rule 3140 and IM–3140–1 (which are not being amended by this filing), establish exercise limits for the aforementioned ETFs.

The Exchange proposes to amend Rule IM–3120–2 to double the position limits and, as a result, exercise limits, for options on each of HYG, XLF, FXI, EFA and SPY. By virtue of IM–3140–1, the exercise limits for EFA, FXI, HYG, XLF, and SPY would similarly increase. The table below represents the current, and proposed, position limits for options on the ETFs subject to this proposal:

ETF	Current position limit	Proposed position limit
SPY	1,800,000	3,600,000
EFA	500,000	1,000,000
FXI	500,000	1,000,000
HYG	250,000	500,000
XLF	250,000	500,000

The Exchange notes that the proposed position limits for options on EFA and FXI are consistent with existing position limits for options on the iShares Russell 2000 ETF (''IWM'') and the iShares MSCI Emerging Markets ETF (''EEM''), while the proposed limits for options on XLF and HYG are consistent with current position limits for options on the iShares MSCI Brazil Capped ETF (''EWZ''), iShares 20+ Year Treasury Bond Fund ETF (''TLT''), and iShares MSCI Japan ETF (''EWJ''). The Exchange represents that the Underlying ETFs qualify for either (1) the initial listing criteria set forth in Exchange Rule 5020(h)(2) for ETFs holding non-U.S. component securities, or (2) generic listing standards for series of portfolio depository receipts and index fund shares based on international or global indexes under which a comprehensive surveillance agreement (''CSA'') is not required, as well as the continued listing criteria in Rule 5030.[5] In compliance with its listing rules, the Exchange also represents that non-U.S. component securities that are not subject to a CSA do not, in the aggregate, represent more than 50% of the weight of any of the Underlying ETFs.[6]

Cboe's Composition and Growth Analysis for Underlying ETFs

As stated above, position (and exercise) limits are intended to prevent the establishment of options positions

[3] *See* Securities Exchange Act Release No. 34–88768 (April 29, 2020), 85 FR 26736 (May 5, 2020) (Order Granting Accelerated Approval of SR–BOX–2020–015 [sic] as Modified by Amendment No. 1).

[4] *Id.*

[5] The Exchange notes that the initial listing criteria for options on ETFs that hold non-U.S. component securities are more stringent than the maintenance listing criteria for those same ETF options. *See* Rule 5020(h)(2); Rule 5030(h).

[6] *See* Rule 5020(h)(2)(ii)(A).

that can be used or might create incentives to manipulate the underlying market so as to benefit options positions. The Securities and Exchange Commission (the ''Commission'') has recognized that these limits are designed to minimize the potential for mini-manipulations and for corners or squeezes of the underlying market, as well as serve to reduce the possibility for disruption of the options market itself, especially in illiquid classes.[7] The Underlying ETFs as well as the ETF components are highly liquid, and are based on a broad set of highly liquid securities and other reference assets, as demonstrated by the trading statistics collected by Cboe.[8] The Commission recognized the liquidity of the securities comprising the underlying interest of SPY and permitted no position limits on SPY options from 2012 through 2018.[9]

To support its proposed position limit increases, Cboe conducted an analysis in support of its proposal. BOX agrees with Cboe's trading statistics and analysis. In support of its proposal, Cboe considered both liquidity of the Underlying ETFs and the component securities of the Underlying ETFs, as well as the availability of economically equivalent products to the overlying options and their respective position limits. For instance, some of the Underlying ETFs are based upon broad-based indices that underlie cash-settled options, and therefore the options on the Underlying ETFs are economically equivalent to the options on those indices, which have no position limits. Other Underlying ETFs are based upon broad-based indices that underlie cash-settled options with position limits reflecting notional values that are larger than current position limits for options on the ETFs based on the same indices. For indexes that are tracked by an Underlying ETF but on which there are no options listed, the Exchange believes, based on the liquidity, depth and breadth of the underlying market of the components of the indexes, that each of the indexes referenced by the applicable ETFs would be considered a broad-based index under the Exchange's Rules. Additionally, if in some cases certain position limits are appropriate for the options overlying comparable indexes or basket of securities that the Underlying ETFs track, then those economically equivalent position limits should be appropriate for the options overlying the Underlying ETFs.

The Exchange notes, the following trading statistics have been collected by Cboe,[10] regarding shares of and options on the Underlying ETFs, as well as the component securities:

Product	ADV [11] (ETF shares)	ADV (option contracts)	Shares outstanding (ETFs) [12]	Fund market cap (USD)	Total market cap of ETF Components [13]
SPY	70.3 million	2.8 million	968.7 million	312.9 billion	29.3 trillion.
FXI	26.1 million	196,600	106.8 million	4.8 billion	28.0 trillion.
EFA	25.1 million	155,900	928.2 million	64.9 billion	19.3 trillion.
HYG	20.0 million	193,700	216.6 million	19.1 billion	[14]906.4 billion.
XLF	48.8 million	102,100	793.6 million	24.6 billion	3.8 trillion.

In addition, Cboe also collected the same trading statistics, where applicable, as above regarding a sample of other ETFs, as well as the current position limits for options on such ETFs, in order to draw comparisons in support of their proposed position limit increases for options on a number of Underlying ETFs (see further discussion below):

Product	ADV (ETF shares)	ADV (option contracts)	Shares outstanding (EFTs)	Fund market cap (USD)	Total market cap of ETF components	Current position limits
QQQ	30.2 million	670,200	410.3 million	88.7 billion	10.1 trillion	1,800,000
EWZ	26.7 million	186,500	233 million	11.3 billion	234.6 billion	500,000
TLT	9.6 million	95,200	128.1 million	17.5 billion	N/A	500,000
EWJ	7.2 million	5,700	236.6 million	14.2 billion	3 trillion	500,000

The following analysis, which BOX agrees with, was conducted by Cboe in support of its proposal. Cboe noted that, overall, the liquidity in the shares of the Underlying ETFs and in the component securities of the Underlying ETFs, and in their overlying options, as well as the large market capitalizations and structure of each of the Underlying ETFs, support the proposal to increase the position limits for each option class. Given the robust liquidity and capitalization in the Underlying ETFs and in the component securities of the Underlying ETFs, the Exchange does not anticipate that the proposed increase in position limits would create significant price movements. Also, the Exchange believes the market capitalization of the underlying component securities of the applicable index or reference asset are large enough to adequately absorb potential price movements that may be caused by large trades.

Specifically, the Exchange notes that SPY tracks the performance of the S&P 500 Index, which is an index of

[7] *See* Securities Exchange Act Release No. 67672 (August 15, 2012), 77 FR 50750 (August 22, 2012) (SR-NYSEAmex-2012-29).

[8] *See supra* note 3.

[9] *See* Securities Exchange Act Release Nos. 67936 (September 27, 2012), 77 FR 60491 (October 3, 2012) (SR–BOX–2012–013), which implemented a pilot program that ran through 2017, during which there were no position limits for options on SPY. The Exchange notes that throughout the duration of the pilot program it was not aware of any problems created or adverse consequences as a result of the pilot program. *See also* Securities Exchange Act Release No. 34–83414 (June 12, 2018), 83 FR 28296 (June 18, 2018) (SR–BOX–2018–22).

[10] See Securities Exchange Act Release No. 34–88350 (March 10, 2020), 85 FR 15003 (March 16, 2020) (SR–CBOE–2020–015).

[11] Cboe's Average daily volume (ADV) data for ETF shares and options contracts are for all of 2019. Additionally, reference to ADV in ETF shares, and ETF options herein this proposal are for all of 2019, unless otherwise indicated.

[12] Shares Outstanding and Fund Market Capitalization Data in the tables presented herein this filing were sourced from Bloomberg and the Cboe's internal data on January 2, 2020.

[13] Total Market Capitalization of the ETF Components presented in the tables herein this filing were sourced from Bloomberg on January 3, 2020, as well as directly from the issuers' websites.

[14] Total Market Capitalization of HYG was sourced from IHS Markit, which sends daily constituent information to Cboe.

diversified large cap U.S. companies.[15] It is composed of 505 selected stocks spanning over approximately 24 separate industry groups. The S&P 500 is one of the most commonly followed equity indices, and is widely considered to be the best indicator of stock market performance as a whole. SPY is one of the most actively traded ETFs. In support of its proposal to increase position limits for SPY to 3,600,000 contracts, Cboe compared SPY's ADV from 2017 to the end of 2019, and found that SPY's ADV has increased from approximately 64.6 million shares to 70.3 million shares.[16] Similarly, Cboe noted SPY's ADV in options contracts has increased from 2.6 million to 2.8 million through 2019.[17] Cboe's data shows the demand for options trading on SPY has continued to increase; however, the position limits have remained the same, which the Exchange believes may have impacted growth in SPY option volume from 2017 through 2019. In addition, Cboe notes that SPY shares are more liquid than PowerShares QQQ Trust (''QQQ'') shares, which is also currently subject to a position limit of 1,800,000 contracts.[18] Specifically, according to Cboe's statistical comparison, SPY currently experiences over twice the ADV in shares and over four times the ADV in options than that of QQQ.[19]

EFA tracks the performance of MSCI EAFE Index (''MXEA''), which is comprised of over 900 large and mid-cap securities across 21 developed markets, including countries in Europe, Australia and the Far East, excluding the U.S. and Canada.[20] In support of its proposal to increase the position limit for EFA, Cboe's proposal specifies, that from 2017 through 2019, ADV has grown significantly in shares of EFA and in options on EFA, from approximately 19.4 million shares in 2017 to 25.1 million through 2019, and from approximately 98,800 options contract in 2017 to 155,900 through 2019. Further, Cboe compared the notional value of EFA's share price of $69.44 and MXEA's index level of 2036.94, approximately 29 EFA option contracts equal one MXEA option contract. Based on the above comparison of notional values, Cboe concluded that a position limit for EFA options would be economically equivalent to that of MXEA options which equates to 725,000 contracts (previously) and 1,450,000 for Cboe's current 50,000 contract position limit for MXEA options.[21] Cboe also noted that MXEA index options have an ADV of 594 options contracts, which equate to an ADV of 17,226 EFA option contracts (as that is 29 times the size of 594). The Exchange believes the significantly higher actual ADV (155,900 contracts), economically equivalent ADV (17,226 contracts), notional value, and economically equivalent position limits for EFA as compared to MXEA options, supports an increase in position limits for EFA options from 500,000 contracts to 1,000,000 contracts.

FXI tracks the performance of the FTSE China 50 Index, which is composed of the 50 largest Chinese stocks.[22] According to Cboe, FXI shares and options have also experienced increased liquidity since 2017, as ADV has grown from approximately 15.1 million shares in 2017 to 26.1 million through 2019, as well as approximately 71,900 options contracts in 2017 to 196,600 through 2019. Cboe notes that although there are currently no options on the FTSE China 50 Index listed for trading, the components of the FTSE China 50 Index, which can be used to create a basket of stocks that equate to the FXI ETF, currently have a market capitalization of approximately $28 trillion and FXI has a market capitalization of $4.8 billion (as indicated above), which the Exchange believes are both large enough to absorb potential price movements caused by a large trade in FXI.

XLF invests in a wide array of financial service firms with diversified business lines ranging from investment management to commercial and investment banking. It generally corresponds to the price and yield performance of publicly traded equity securities of companies in the SPDR Financial Select Sector Index.[23] In support of its proposal, Cboe compared XLF's ADV in shares and in options to the ADV in shares and options for EWZ (26.7 million shares and 186,500 options contracts), TLT (9.6 million shares and 95,200 options contracts), and EWJ (7.2 million shares and 5,700 options contracts). According to Cboe, XLF experiences significantly greater ADV in shares and options than EWZ, TLT, and EWJ, which already have a position limit of 500,000 contracts—the proposed position limit for XLF options. According to Cboe, although there are no options listed on the SPDR Financial Select Sector Index listed for trading, the components of the index, which can be used to create a basket of stocks that equate to the XLF ETF, currently have a market capitalization of $3.8 trillion (indicated above). Additionally, XLF has a market capitalization of $24.6 billion. The Exchange believes that both of these are large enough to absorb potential price movements caused by a large trade in XLF.

Finally, HYG attempts to track the investment results of Markit iBoxx USD Liquid High Yield Index, which is composed of U.S. dollar-denominated, high-yield corporate bonds and is one of the most widely used high-yield bond ETFs.[24] To support its proposed position limit increase on HYG, Cboe compared the HYG's ADV in share and options to that of both TLT (9.6 million shares and 95,200 options contracts), and EWJ (7.2 million shares and 5,700 options contracts). BOX agrees with Cboe's comparison and following analysis. Cboe found that HYG experiences significantly higher ADV in shares and options than both TLT and EWJ, which are currently subject to a position limit of 500,000 options contracts—the proposed limit for options on HYG. According to Cboe, while HYG does not have an index option analogue listed for trading, Cboe believes that its market capitalization of $19.1 billion, and of $906.4 billion in component securities, is adequate to absorb a potential price movement that may be caused by large trades in HYG.

Creation and Redemption for ETFs

The Exchange believes that the creation and redemption process for ETFs will lessen the potential for manipulative activity with options on the Underlying ETFs. When an ETF

[15] *See* SPDR S&P 500 ETF Trust, available at: *https://www.ssga.com/us/en/individual/etfs/funds/spdr-sp-500-etf-trust-spy* (January 21, 2020).

[16] *See supra* note 3.

[17] *See* Securities Exchange Act Release No. 83415 (June 12, 2018), 83 FR 28274 (June 18, 2018) (SR–CBOE–2018–042); and 34–83414 (June 12, 2018), 83 FR 28296 (June 18, 2020) (SR–BOX–2018–22).

[18] The Exchange notes that it also updates the PowerShares QQQ Trust symbol in IM–3120–2 from QQQQ to QQQ as this accurately reflects the current ticker symbol for PowerShares QQQ, which was officially changed from QQQQ to QQQ by Invesco PowerShares Capital Management LLC in 2011. *See* Morningstar, PowerShares Changes Ticker Symbol of Tech-Heavy QQQ ETF, available at *morningstar.com/articles/374713/powershares-changes-tickersymbol-of-tech-heavy-qqq-etf* (March 23, 2011).

[19] The 2019 ADV for QQQ shares is 30.2 million and for options on QQQ is 670,200.

[20] *See* iShares MSCI EAFE ETF, available at *https://www.ishares.com/us/products/239623/ishares-msci-eafe-etf* (February 10, 2020).

[21] The Exchange notes that BOX does not list options on foreign indexes.

[22] *See* iShares China Large-Cap ETF, available at *https://www.ishares.com/us/products/239536/ishares-china-largecap-etf* (February 10, 2020).

[23] *See* Select Sector SPDR ETFs, XLF, available at *http://www.sectorspdr.com/sectorspdr/sector/xlf* (January 15, 2020).

[24] See iShares iBoxx $ High Yield Corporate Bond ETF, available at *https://www.ishares.com/us/products/239565/ishares-iboxx-high-yield-corporatebond-etf* (January 15, 2020).

provider wants to create more shares, it looks to an Authorized Participant (generally a market maker or other large financial institution) to acquire the securities the ETF is to hold. For instance, when an ETF is designed to track the performance of an index, the Authorized Participant can purchase all the constituent securities in the exact same weight as the index, then deliver those shares to the ETF provider. In exchange, the ETF provider gives the Authorized Participant a block of equally valued ETF shares, on a one-for-one fair value basis. The price is based on the net asset value, not the market value at which the ETF is trading. The creation of new ETF units can be conducted during an entire trading day, and is not subject to position limits. This process works in reverse where the ETF provider seeks to decrease the number of shares that are available to trade. The creation and redemption process, therefore, creates a direct link to the underlying components of the ETF, and serves to mitigate potential price impact of the ETF shares that might otherwise result from increased position limits for the ETF options.

The Exchange understands that the ETF creation and redemption process seeks to keep an ETF's share price trading in line with the ETF's underlying net asset value. Because an ETF trades like a stock, its share price will fluctuate during the trading day, due to simple supply and demand. If demand to buy an ETF is high, for instance, the ETF's share price might rise above the value of its underlying securities. When this happens, the Authorized Participant believes the ETF may now be overpriced, so it may buy shares of the component securities and then sell ETF shares in the open market (*i.e.* creations). This may drive the ETF's share price back toward the underlying net asset value. Likewise, if the ETF share price starts trading at a discount to the securities it holds, the Authorized Participant can buy shares of the ETF and redeem them for the underlying securities (*i.e.* redemptions). Buying undervalued ETF shares may drive the share price of the ETF back toward fair value. This arbitrage process helps to keep an ETF's share price in line with the value of its underlying portfolio.

Surveillance and Reporting Requirements

The Exchange believes that increasing the position limits for the options on the Underlying ETFs would lead to a more liquid and competitive market environment for these options, which will benefit customers interested in trading these products. The reporting requirement for the options on the Underlying ETFs would remain unchanged. Thus, the Exchange would still require that each BOX Participant that maintains positions in the options on the same side of the market, for its own account or for the account of a customer, report certain information to the Exchange. This information would include, but would not be limited to, the options' positions, whether such positions are hedged and, if so, a description of the hedge(s). Exchange Market-Makers [25] are exempt from this reporting requirement, because Market Maker information can be accessed through the Exchange's market surveillance systems.[26] In addition, the general reporting requirement for customer accounts that maintain an aggregate long or short position of 200 or more options contracts of any single class of options traded on BOX would remain at this level for the options subject to this proposal, and continue to serve as an important part of the Exchange's surveillance efforts.[27]

The Exchange believes that the existing surveillance procedures and reporting requirements at the Exchange and other SROs are capable of properly identifying disruptive and/or manipulative trading activity. The Exchange also represents that it has adequate surveillances in place to detect potential manipulation, as well as reviews in place to identify potential changes in composition of the Underlying ETFs, and continued compliance with the Exchange's listing standards. These procedures utilize daily monitoring of market activity via automated surveillance techniques to identify unusual activity in both options and the underlyings, as applicable.[28] The Exchange also notes that large stock holdings must be disclosed to the Commission by way of Schedules 13D or 13G,[29] which are used to report ownership of stock which exceeds 5% of a company's total stock issue and may assist in providing information in monitoring for any potential manipulative schemes.

The Exchange believes that the current financial requirements imposed by the Exchange and by the Commission adequately address concerns regarding potentially large, unhedged positions in the options on the Underlying ETFs. Current margin and risk-based haircut methodologies serve to limit the size of positions maintained by any one account by increasing the margin and/or capital that a BOX Participant must maintain for a large position held by itself or by its customer.[30] In addition, Rule 15c3–1 [31] imposes a capital charge on BOX Participants to the extent of any margin deficiency resulting from the higher margin requirement.

2. Statutory Basis

The Exchange believes that the proposal is consistent with the requirements of Section 6(b) of the Act,[32] in general, and Section 6(b)(5) of the Act,[33] in particular, in that it is designed to prevent fraudulent and manipulative acts and practices, to promote just and equitable principles of trade, to foster cooperation and coordination with persons engaged in facilitating transactions in securities, to remove impediments to and perfect the mechanism of a free and open market and a national market system, and, in general to protect investors and the public interest. Additionally, the Exchange believes the proposed rule change is consistent with the Section 6(b)(5) [34] requirement that the rules of an exchange not be designed to permit unfair discrimination between customers, issuers, brokers, or dealers.

The Exchange believes that the proposed increase in position limits for options on the Underlying ETFs will remove impediments to and perfect the mechanism of a free and open market and national market system, and, in general, protect investors and the public interest, because it will provide market participants with the ability to more effectively execute their trading and hedging activities. The proposed increases will allow market participants to more fully implement hedging strategies in related derivative products and to further use options to achieve investment strategies (*e.g.,* there are Exchange-Traded Products (''ETPs'') that use options on the Underlying ETFs as part of their investment strategy, and

[25] A Market Maker ''is an Options Participant registered with the Exchange for the purpose of making markets in options contracts traded on the Exchange and that is vested with the rights and responsibilities specified in the Rule 8000 Series. All Market Makers are designated as specialists on the Exchange for all purposes under the Exchange Act or Rules thereunder.'' *See* BOX Rule 100(a)(31).

[26] The Exchange notes that the Financial Industry Regulatory Authority (''FINRA''), pursuant to a regulatory services agreement, operates surveillance on behalf of BOX. This type of Market Maker information can be found through FINRA.

[27] *See* BOX Rule 3150 for reporting requirements.

[28] These procedures have been effective for the surveillance of trading the options subject to this proposal and will continue to be employed by FINRA on behalf of BOX.

[29] 17 CFR 240.13d–1.

[30] *See* BOX Rule 10100 Series for a description of margin requirements.

[31] 17 CFR 240.15c3–1.

[32] 15 U.S.C. 78f(b).

[33] 15 U.S.C. 78f(b)(5).

[34] *Id.*

the applicable position limits as they stand today may inhibit these ETPs in achieving their investment objectives, to the detriment of investors). Also, increasing the applicable position limits may allow Market-Makers to provide the markets for these options with more liquidity in amounts commensurate with increased consumer demand in such markets. The proposed position limit increases may also encourage other liquidity providers to shift liquidity, as well as encourage consumers to shift demand, from over the counter markets onto the Exchange, which will enhance the process of price discovery conducted on the Exchange through increased order flow.

In addition, the Exchange believes that the structure of the Underlying ETFs, the considerable market capitalization of the funds, underlying component securities, and the liquidity of the markets for the applicable options and underlying component securities will mitigate concerns regarding potential manipulation of the products and/or disruption of the underlying markets upon increasing the relevant position limits. As a general principle, increases in market capitalizations, active trading volume, and deep liquidity of securities do not lead to manipulation and/or disruption. This general principle applies to the recently observed increased levels of market capitalization, trading volume, and liquidity in shares of the Underlying ETFs, and the components of the Underlying ETFs (as described above), the Exchange does not believe that the options markets or underlying markets would become susceptible to manipulation and/or disruption as a result of the proposed position limit increases. Indeed, the Commission has previously expressed the belief that removing position and exercise limits may bring additional depth and liquidity to the options markets without increasing concerns regarding intermarket manipulation or disruption of the options or the underlying securities.[35] More specifically, the Commission recently approved Cboe's proposal to increase the position limits for the Underlying ETFs in this filing.[36]

Further, the Exchange notes that the proposed rule change to increase position limits for select actively traded options, is not novel and has been previously approved by the Commission. For example, the Commission has previously approved, on a pilot basis, eliminating position limits for options on SPY.[37] Additionally, the Commission has approved similar proposed rule changes by the Exchange to increase position limits for options on highly liquid, actively-traded ETFs.[38] In approving the permanent elimination of position (and exercise limits) for such options, the Commission relied heavily upon Cboe's surveillance capabilities, expressing trust in the enhanced surveillances and reporting safeguards that Cboe took in order to detect and deter possible manipulative behavior which might arise from eliminating position and exercise limits.[39] Furthermore, as described more fully above, the proposed position limits for options on EFA and FXI are consistent with existing position limits for options on IWM and EEM, and the proposed limits for options on XLF and HYG are consistent with current position limits for options on EWZ, TLT, and EWJ.

The Exchange believes that BOX's surveillance and reporting safeguards continue to be designed to deter and detect possible manipulative behavior that might arise from increasing or eliminating position and exercise limits in certain classes. Lastly, the Exchange believes that the current financial requirements imposed by the Exchange and by the Commission adequately address concerns regarding potentially large, unhedged position in the options on the Underlying ETFs, further promoting just and equitable principles of trading, the maintenance of a fair and orderly market, and the protection of investors.

B. Self-Regulatory Organization's Statement on Burden on Competition

The Exchange does not believe that the proposed rule change will impose any burden on competition that is not necessary or appropriate in furtherance of the purposes of the Act. The Exchange does not believe the proposed rule change will impose any burden on intramarket competition that is not necessary or appropriate in furtherance of the purposes of the Act because the increased position limits (and exercise limits) will be available to all market participants and apply to each in the same manner. The Exchange believes that the proposed rule change will provide additional opportunities for market participants to more efficiently achieve their investment and trading objectives.

The Exchange does not believe that the proposed rule change will impose any burden on intermarket competition that is not necessary or appropriate in furtherance of the Act. On the contrary, the Exchange believes the proposal promotes competition because it may attract additional order flow from the OTC market to exchanges, which would in turn compete amongst each other for those orders. The Exchange believes market participants would benefit from being able to trade options with increased position limits in an exchange environment in several ways, including but not limited to the following: (1) Enhanced efficiency in initiating and closing out position; (2) increased market transparency; and (3) heightened contra-party creditworthiness due to the role of OCC as issuer and guarantor. Further, the Exchange notes that the rule change is being proposed as a competitive response to a filing submitted by Cboe that was recently approved by the Commission.[40]

As such, the Exchange does not believe that the proposed rule change will impose any burden on competition not necessary or appropriate in furtherance of the purposes of the Act.

C. Self-Regulatory Organization's Statement on Comments on the Proposed Rule Change Received From Members, Participants, or Others

The Exchange has neither solicited nor received comments on the proposed rule change.

III. Date of Effectiveness of the Proposed Rule Change and Timing for Commission Action

Because the foregoing proposed rule change does not: (i) Significantly affect the protection of investors or the public interest; (ii) impose any significant burden on competition; and (iii) become operative for 30 days from the date on which it was filed, or such shorter time as the Commission may designate, it has become effective pursuant to Section 19(b)(3)(A) of the Act[41] and Rule 19b–4(f)(6) thereunder.[42]

A proposed rule change filed pursuant to Rule 19b–4(f)(6) under the

[35] *See* Securities Exchange Act Release No. 62147 (October 28, 2005) (SR–CBOE–2005–41), at 62149.

[36] *See supra* note 3.

[37] *See supra* notes 9 and 10.

[38] *See supra* note 3; *see also* Securities Exchange Act Release No. 68086 (October 23, 2012), 77 FR 65600 (October 29, 2012) (SR–CBOE–2012–066); and 34–68478 (December 19, 2012), 77 FR 76132 (December 26, 2012) (SR–BOX–2012–023).

[39] *See* Securities Exchange Act Release Nos. 52650 (October 21, 2005), 70 FR 62147, at 62149 (October 28, 2005) (SR–CBOE–2005–41).

[40] *See supra,* note 3.

[41] 15 U.S.C. 78s(b)(3)(A).

[42] 17 CFR 240.19b–4(f)(6). In addition, Rule 19b–4(f)(6)(iii) requires a self-regulatory organization to give the Commission written notice of its intent to file the proposed rule change, along with a brief description and text of the proposed rule change, at least five business days prior to the date of filing of the proposed rule change, or such shorter time as designated by the Commission. The Exchange has satisfied this requirement.

Act[43] normally does not become operative for 30 days after the date of its filing. However, Rule 19b–4(f)(6)(iii)[44] permits the Commission to designate a shorter time if such action is consistent with the protection of investors and the public interest. The Exchange has asked the Commission to waive the 30-day operative delay so that the proposed rule change may become operative upon filing. The Exchange states that waiver of the operative delay would be consistent with the protection of investors and the public interest because it will ensure fair competition among the exchanges by allowing the Exchange to immediately increase the position limits for the products subject to this proposal, which the Exchange believes will provide consistency for BOX Participants that are also members at CBOE where these increased position limits are currently in place. For this reason, the Commission believes that waiver of the 30-day operative delay is consistent with the protection of investors and the public interest. Therefore, the Commission hereby waives the operative delay and designates the proposal as operative upon filing.[45]

At any time within 60 days of the filing of the proposed rule change, the Commission summarily may temporarily suspend such rule change if it appears to the Commission that such action is necessary or appropriate in the public interest, for the protection of investors, or otherwise in furtherance of the purposes of the Act. If the Commission takes such action, the Commission shall institute proceedings to determine whether the proposed rule change should be approved or disapproved.

IV. Solicitation of Comments

Interested persons are invited to submit written data, views, and arguments concerning the foregoing, including whether the proposed rule change is consistent with the Act. Comments may be submitted by any of the following methods:

Electronic Comments

- Use the Commission's internet comment form (*http://www.sec.gov/rules/sro.shtml*); or
- Send an email to *rule-comments@sec.gov.* Please include File Number SR–BOX–2020–13 on the subject line.

Paper Comments

- Send paper comments in triplicate to Secretary, Securities and Exchange Commission, 100 F Street NE, Washington, DC 20549–1090.

All submissions should refer to File Number SR–BOX–2020–13. This file number should be included on the subject line if email is used. To help the Commission process and review your comments more efficiently, please use only one method. The Commission will post all comments on the Commission's internet website (*http://www.sec.gov/rules/sro.shtml*). Copies of the submission, all subsequent amendments, all written statements with respect to the proposed rule change that are filed with the Commission, and all written communications relating to the proposed rule change between the Commission and any person, other than those that may be withheld from the public in accordance with the provisions of 5 U.S.C. 552, will be available for website viewing and printing in the Commission's Public Reference Room, 100 F Street NE, Washington, DC 20549 on official business days between the hours of 10:00 a.m. and 3:00 p.m. Copies of such filing also will be available for inspection and copying at the principal office of the Exchange. All comments received will be posted without change. Persons submitting comments are cautioned that we do not redact or edit personal identifying information from comment submissions. You should submit only information that you wish to make available publicly. All submissions should refer to File Number SR–BOX–2020–13, and should be submitted on or before June 12, 2020.

For the Commission, by the Division of Trading and Markets, pursuant to delegated authority.[46]

J. Matthew DeLesDernier,

Assistant Secretary.

[FR Doc. 2020–11041 Filed 5–21–20; 8:45 am]

BILLING CODE 8011–01–P

[43] 17 CFR 240.19b–4(f)(6).

[44] 17 CFR 240.19b–4(f)(6)(iii).

[45] For purposes only of waiving the 30-day operative delay, the Commission also has considered the proposed rule's impact on efficiency, competition, and capital formation. *See* 15 U.S.C. 78c(f).

[46] 17 CFR 200.30–3(a)(12).

SECURITIES AND EXCHANGE COMMISSION

[Release No. 34–88901; File Nos. SR–NYSE–2020–05, SR–NYSEAMER–2020–05, SR–NYSEArca–2020–08, SR–NYSECHX–2020–02, SR–NYSENAT–2020–03, SR–NYSE–2020–11, SR–NYSEAMER–2020–10, SR–NYSEArca–2020–15, SR–NYSECHX–2020–05, SR–NYSENAT–2020–08]

Self-Regulatory Organizations; New York Stock Exchange LLC, NYSE American LLC, NYSE Arca, Inc., NYSE Chicago, Inc., and NYSE National, Inc.; Order Instituting Proceedings To Determine Whether To Approve or Disapprove Proposed Rule Changes To Establish a Wireless Fee Schedule Setting Forth Available Wireless Bandwidth Connections and Wireless Market Data Connections and Associated Fees

May 18, 2020.

I. Introduction

On January 30, 2020, New York Stock Exchange LLC (''NYSE''), NYSE American LLC (''NYSE American''), NYSE Arca, Inc. (''NYSE Arca''), NYSE Chicago, Inc. (''NYSE Chicago''), and NYSE National, Inc. (''NYSE National'') (collectively, the ''Exchanges'') each filed with the Securities and Exchange Commission (''Commission''), pursuant to Section 19(b)(1) of the Securities Exchange Act of 1934 (''Exchange Act'' or ''Act'')[1] and Rule 19b–4 thereunder,[2] a proposed rule change to establish a schedule of Wireless Connectivity Fees and Charges (''Wireless Fee Schedule'') listing available wireless connections between the Mahwah, New Jersey data center (''Mahwah Data Center'') and other data centers. The proposed rule changes (collectively, ''Wireless I'') were published for comment in the **Federal Register** on February 18, 2020.[3] On April 1, 2020, pursuant to Section 19(b)(2) of the Act,[4] the Commission designated a longer period within which to either approve the Wireless I proposed rule changes, disapprove the proposed rule changes, or institute

[1] 15 U.S.C. 78s(b)(1).

[2] 17 CFR 240.19b–4.

[3] *See* Securities Exchange Act Release Nos. 88168 (February 11, 2020), 85 FR 8938 (February 18, 2020) (SR–NYSE–2020–05) (''Wireless I Notice''); 88169 (February 11, 2020), 85 FR 8946 (February 18, 2020) (SR–NYSEAMER–2020–05); 88170 (February 11, 2020), 85 FR 8956 (February 18, 2020) (SR–NYSEArca–2020–08); 88172 (February 11, 2020), 85 FR 8923 (February 18, 2020) (SR–NYSECHX–2020–02); and 88171 (February 11, 2020), 85 FR 8930 (February 18, 2020) (SR–NYSENAT–2020–03) (collectively, the ''Wireless I Notices''). Comments received on the Wireless I Notices are available on the Commission's website at: *https://www.sec.gov/comments/sr-nyse-2020-05/srnyse202005.htm.*

[4] 15 U.S.C. 78s(b)(2).

proceedings to determine whether to disapprove the proposed rule changes.[5]

On February 11, 2020, NYSE, NYSE Arca, NYSE Chicago, and NYSE National each filed with the Commission, pursuant to Section 19(b)(1) of the Act[6] and Rule 19b–4 thereunder,[7] a proposed rule change to amend the Wireless Fee Schedule to add wireless connections for the transport of certain market data of the Exchanges. NYSE American filed with the Commission a substantively identical filing on February 12, 2020. The proposed rule changes (collectively, ''Wireless II'') were published for comment in the **Federal Register** on February 25, 2020.[8] On April 1, 2020, pursuant to Section 19(b)(2) of the Act,[9] the Commission designated a longer period within which to either approve the Wireless II proposed rule changes, disapprove the proposed rule changes, or institute proceedings to determine whether to disapprove the proposed rule changes.[10]

This order institutes proceedings under Section 19(b)(2)(B) of the Exchange Act[11] to determine whether to approve or disapprove the Wireless I and Wireless II proposed rule changes.

II. Description of the Proposed Rule Changes

A. Wireless I

In Wireless I, the Exchanges propose to establish the Wireless Fee Schedule, setting forth options for market participants to establish wireless connections for specified fees between the Mahwah Data Center and three data centers that are owned and operated by third parties unaffiliated with the Exchanges: (1) Carteret, New Jersey; (2) Secaucus, New Jersey; and (3) Markham, Canada (collectively, the ''Third Party Data Centers'').[12] As more fully set forth in the Wireless I Notices, the Exchanges state that a market participant opting to establish a wireless connection between the Mahwah Data Center and a Third Party Data Center may do so by requesting one from ICE Data Services (''IDS'').[13] The Exchanges state that IDS operates through several different Intercontinental Exchange, Inc. (''ICE'') affiliates, including NYSE Technologies Connectivity, Inc., an indirect subsidiary of NYSE.[14]

According to the Exchanges, once requested, IDS establishes the wireless connection (herein a ''Wireless Bandwidth Connection'') between IDS's equipment in the Third Party Data Center and IDS's equipment in the Mahwah Data Center.[15] IDS uses its own wireless network between the Markham Third Party Data Center and the Mahwah Data Center.[16] IDS contracts with a non-ICE entity to provide Wireless Bandwidth Connections between the Secaucus and Carteret Third Party Data Centers and the Mahwah Data Center through a series of towers equipped with wireless equipment.[17] With respect to connections between the Secaucus and Carteret Third Party Data Centers and the Mahwah Data Center, these towers include a pole on the grounds of the Mahwah Data Center property, to which access is restricted.[18] At each end of the Wireless Bandwidth Connection, the customer uses a cross connect or other cable to connect its own equipment to the IDS equipment.[19] Cross connects in the Mahwah Data Center lead to the customer's server in co-location.[20]

As discussed further below,[21] the Exchanges take the position that the Wireless Bandwidth Connections are not ''facilities of an exchange'' within the meaning of Section 3(a)(1) of the Act (defining ''exchange'') and Section 3(a)(2) of the Act (defining ''facility'').[22] The Exchanges thus take the position that the proposed Wireless Fee Schedule is not required to be filed with the Commission, and not subject to review for determination of consistency with Act standards.[23] The Exchanges seek approval of the Wireless Fee Schedule, however, stating that they have filed the current proposals ''solely because the Staff of the Commission'' has advised that filing is required.[24]

Proposed Wireless Fee Schedule (Wireless I)

The Exchanges propose that IDS would assess a non-recurring initial charge and a monthly recurring charge (''MRC'') for the Wireless Bandwidth Connections, with variations depending upon bandwidth size and the location of the connection. The proposed schedule set forth by the Exchanges is as follows:[25]

Type of service	Description	Amount of charge
Wireless Connection between Mahwah Data Center and Secaucus access center.	10 Mb Circuit ..	$10,000 per connection initial charge plus monthly charge per connection of $9,000.
Wireless Connection between Mahwah Data Center and Secaucus access center.	50 Mb Circuit ..	$10,000 per connection initial charge plus monthly charge per connection of $13,500.
Wireless Connection between Mahwah Data Center and Secaucus access center.	100 Mb Circuit	$10,000 per connection initial charge plus monthly charge per connection of $23,000.
Wireless Connection between Mahwah Data Center and Secaucus access center.	200 Mb Circuit	$10,000 per connection initial charge plus monthly charge per connection of $44,000.
Wireless Connection between Mahwah Data Center and Carteret access center.	10 Mb Circuit ..	$10,000 per connection initial charge plus monthly charge per connection of $10,000.

[5] *See* Securities Exchange Act Release No. 88539 (April 1, 2020), 85 FR 19553 (April 7, 2020). The Commission designated May 18, 2020, as the date by which it should approve, disapprove, or institute proceedings to determine whether to disapprove the proposed rule changes.

[6] 15 U.S.C. 78s(b)(1).

[7] 17 CFR 240.19b–4.

[8] *See* Securities Exchange Act Release Nos. 88237 (February 19, 2020), 85 FR 10752 (February 25, 2020) (SR–NYSE–2020–11) (''Wireless II Notice''); 88238 (February 19, 2020), 85 FR 10776 (February 25, 2020) (SR–NYSEAMER–2020–10); 88239 (February 19, 2020), 85 FR 10786 (February 25, 2020) (SR–NYSEArca–2020–15); 88240 (February 19, 2020), 85 FR 10795 (February 25, 2020) (SR–NYSECHX–2020–05); and 88241 (February 19, 2020), 85 FR 10738 (February 25, 2020) (SR–NYSENAT–2020–08) (collectively, the ''Wireless II Notices''). Comments received on the Wireless II Notices are available on the Commission's website at: *https://www.sec.gov/comments/sr-nyse-2020-11/srnyse202011.htm.*

[9] 15 U.S.C. 78s(b)(2).

[10] *See* Securities Exchange Act Release No. 88540 (April 1, 2020), 85 FR 19562 (April 7, 2020). The Commission designated May 25, 2020, as the date by which it should approve, disapprove, or institute proceedings to determine whether to disapprove the proposed rule changes.

[11] 15 U.S.C. 78s(b)(2)(B).

[12] *See* Wireless I Notice, *supra* note 3, at 8938.

[13] *See id.* at 8939.

[14] *See id.* at 8939 n.11. The Exchanges themselves are indirect subsidiaries of ICE. *See id.* at 8939.

[15] *See id. See also infra* note 47 and accompanying text (further summarizing how the Exchanges describe the function and purpose of these connections).

[16] *See id.* at 8939.

[17] *See id.* at 8939.

[18] *See id.* at 8943.

[19] *See id.*

[20] *See id.* Proposed rule changes regarding such cross connects in the Mahwah Data Center are filed with the Commission. *See id.* at 8939 n.12 (citing Securities Exchange Act Release No. 67666 (August 15, 2012), 77 FR 50742 (August 22, 2012) (SR–NYSE–2012–18)).

[21] *See* Section II.C.1. *infra.*

[22] *See* Wireless I Notice, *supra* note 3, at 8939–41.

[23] *See id.* at 8938–39.

[24] *See id.* at 8939.

[25] *See id.* at 8941–42.

Type of service	Description	Amount of charge
Wireless Connection between Mahwah Data Center and Carteret access center.	50 Mb Circuit ..	$10,000 per connection initial charge plus monthly charge per connection of $15,000.
Wireless Connection between Mahwah Data Center and Carteret access center.	100 Mb Circuit	$10,000 per connection initial charge plus monthly charge per connection of $25,000.
Wireless Connection between Mahwah Data Center and Carteret access center.	200 Mb Circuit	$10,000 per connection initial charge plus monthly charge per connection of $45,000.
Wireless Connections between (a) Mahwah Data Center and Carteret access center and (b) Mahwah Data Center and Secaucus Data Center.	50 Mb Circuits	$15,000 initial charge for both connections plus monthly charge for both connections of $22,000.
Wireless Connection between Mahwah Data Center and Markham access center.	1 Mb Circuit	$10,000 per connection initial charge plus monthly charge per connection of $6,000.
Wireless Connection between Mahwah Data Center and Markham access center.	5 Mb Circuit	$10,000 per connection initial charge plus monthly charge per connection of $15,500.
Wireless Connection between Mahwah Data Center and Markham access center.	10 Mb Circuit ..	$10,000 per connection initial charge plus monthly charge per connection of $23,000.

As an incentive, the first month's MRC would be waived.[26] In addition, the Exchanges propose to include a General Note on the Wireless Fee Schedule, stating that a market participant that obtains a Wireless Bandwidth Connection will not be charged more than once for that service, irrespective of whether it is a member of one, some or none of the Exchanges.[27]

B. Wireless II

In Wireless II, the Exchanges propose to include additional connectivity options on the Wireless Fee Schedule for specified fees; namely, wireless connections for the transport of certain market data feeds (''Wireless Market Data Connections'') from the Mahwah Data Center to Third Party Data Centers.[28] The market data feeds available via the Wireless Market Data Connections (the ''Selected Market Data'') are certain proprietary market data feeds offered by NYSE, NYSE Arca, and/or NYSE National.[29]

As more fully set forth in the Wireless II Notices, the Exchanges explain that a market participant seeking connectivity to a Selected Market Data feed chooses a connectivity provider.[30] In the case of the proposed Wireless Market Data Connections, market participants would be choosing IDS as wireless connectivity provider.[31] Upon selection, IDS would first need to obtain authorization from the provider of the relevant Selected Market Data feed.[32] Then, IDS would set up the Wireless Market Data Connection for the market participant by collecting the Selected Market Data and sending it over the Wireless Market Data Connection to the IDS access center in the Third Party Data Center, where the customer would then connect to the Selected Market Data at the Third Party Data Center.[33]

As discussed further below,[34] the Exchanges maintain that the Wireless Market Data Connections are not ''facilities of an exchange'' within the meaning of Section 3(a)(1) of the Act (defining ''exchange'') and Section 3(a)(2) of the Act (defining the term ''facility'').[35] They thus take the position that the proposed Wireless Fee Schedule itemizing the available Wireless Market Data Connections and associated fees are not proposed rules of an exchange, are not required to be filed with the Commission, and are not subject to review for determination of consistency with Act standards.[36] The Exchanges seek approval of the addition of Wireless Market Data Connections to the Wireless Fee Schedule, however, stating that they have filed the current proposals ''solely because the Staff of the Commission'' has advised that filing is required.[37]

Proposed Additions to the Wireless Fee Schedule (Wireless II)

The Exchanges propose that IDS would assess a non-recurring initial charge and MRC for the Wireless Market Data Connections, with the variations depending upon the type of fees and location of the connection, set forth by the Exchanges as follows:[38]

[26] *See id.* at 8942. If a customer had an existing Wireless Bandwidth Connection and opted to upgrade or downgrade to a different size circuit connecting to the same Third Party Access Center, it would not be subject to the initial charge. *See id.*

[27] The proposed General Note would be consistent with the first general note in the co-location section of each Exchange's price list and fee schedule. *See id.* at 8942 (citing Securities Exchange Act Release Nos. 70206 (August 15, 2013), 78 FR 51765 (August 21, 2013) (SR–NYSE–2013–59); 70176 (August 13, 2013), 78 FR 50471 (August 19, 2013) (SR–NYSEMKT–2013–67); 70173 (August 13, 2013), 78 FR 50459 (August 19, 2013) (SR–NYSEArca–2013–80); 83351 (May 31, 2018), 83 FR 26314 (June 6, 2018) (SR–NYSENAT–2018–07; and 87408 (October 28, 2019), 84 FR 58778 (November 1, 2019) (SR–NYSECHX–2019–12)). The Exchanges also note that similar language appears in the Nasdaq Stock Market rules. *See id.* (citing The Nasdaq Stock Market General Equity and Options Rules, General 8, Section 1).

[28] *See* Wireless II Notice, *supra* note 8, at 10753.

[29] The Exchanges state that the Selected Market Data is generated at the Mahwah Data Center in the trading and execution systems of NYSE, NYSE Arca and NYSE National. *See id.* In each case, NYSE, NYSE Arca, or NYSE National, as applicable, files with the Commission for the Selected Market Data it generates, and the related fees. *See id.* The filed market data fees apply to all Selected Market Data customers no matter what connectivity provider they use. *See id.* at 10754.

[30] *See id.*

[31] *See id.* at 10754 n.17. *See also infra* note 48 and accompanying text (further summarizing how the Exchanges describe the function and purpose of these connections).

[32] *See id.* at 10754. When requesting authorization from the NYSE, NYSE Arca, or NYSE National to provide a customer with Selected Market Data, the ICE affiliate providing the Wireless Market Data Connection uses the same online tool as all data vendors. *See id.* at 10754 n.15.

[33] *See id.* at 10754. A cable connects the IDS and customer equipment in the Markham Third Party Data Center. If the customer is located in either the Carteret or Secaucus Third Party Data Center, the customer buys a cross connect from IDS. *See id.* at 10754 n.16.

[34] *See* Section II.C.1. *infra.*

[35] *See* Wireless II Notice, *supra* note 8, at 10754–56.

[36] *See id.* at 10753.

[37] *See id.*

[38] *See id.* at 10756. The Exchanges note that the customer is charged by IDS an initial and monthly fee for the Wireless Market Data Connection (whereas the applicable Exchange bills market data subscribers directly, irrespective of whether the market data subscribers receive the Selected Market Data over a Wireless Market Data Connection or from another connectivity provider). *See id.* at 10754.

The Exchanges further explain that there is limited bandwidth available on the wireless network to the Markham, Canada Third Party Data Center. Accordingly, such Wireless Market Data Connections do not transport information for all of the symbols included in the NYSE BBO and Trades and NYSE Arca BBO and Trades data feeds. Rather, IDS provides connectivity to a selection of such data feeds, including the data for which IDS believes there is demand. When a market participant requests a Wireless Market Data Connection to Markham, it receives connectivity to the portions of the NYSE BBO and Trades and NYSE Arca BBO and Trades data that IDS transmits wirelessly. The customer then determines the symbols for which it will receive data. The Exchanges do not have visibility into which portion of the data feed a given customer receives. *See id.* at 10756.

Type of service	Amount of charge
NYSE Integrated Feed: Wireless Connection in Carteret access center	$5,000 per connection initial charge plus monthly charge per connection of $10,500.
NYSE Arca Integrated Feed: Wireless Connection in Carteret access center.	$5,000 per connection initial charge plus monthly charge per connection of $10,500.
NYSE National Integrated Feed: Wireless Connection in Carteret access center.	$5,000 per connection initial charge plus monthly charge per connection of $5,250.
NYSE Integrated Feed and NYSE Arca Integrated Feed: Wireless Connection in Carteret access center.	$5,000 per connection initial charge plus monthly charge per connection of $18,500.
NYSE Integrated Feed, NYSE Arca Integrated Feed, and NYSE National Integrated Feed: Wireless Connection in Carteret access center.	$5,000 per connection initial charge plus monthly charge per connection of $21,000.
NYSE Integrated Feed: Wireless Connection in Secaucus access center.	$5,000 per connection initial charge plus monthly charge per connection of $10,500.
NYSE Arca Integrated Feed: Wireless Connection in Secaucus access center.	$5,000 per connection initial charge plus monthly charge per connection of $10,500.
NYSE National Integrated Feed: Wireless Connection in Secaucus access center.	$5,000 per connection initial charge plus monthly charge per connection of $5,250.
NYSE Integrated Feed and NYSE Arca Integrated Feed: Wireless Connection in Secaucus access center.	$5,000 per connection initial charge plus monthly charge per connection of $18,500.
NYSE Integrated Feed, NYSE Arca Integrated Feed, and NYSE National Integrated Feed: Wireless Connection in Secaucus access center.	$5,000 per connection initial charge plus monthly charge per connection of $21,000.
NYSE BBO and Trades: Wireless Connection in Markham, Canada access center.	$5,000 per connection initial charge plus monthly charge per connection of $6,500.
NYSE Arca BBO and Trades: Wireless Connection in Markham, Canada access center.	$5,000 per connection initial charge plus monthly charge per connection of $6,500.

C. Exchanges' Justification and Comments Received

1. Facilities of an Exchange

As noted above, the Exchanges take the position that the Wireless Fee Schedule is not a proposed rule change required to be filed with the Commission because the Wireless Bandwidth Connections and Wireless Market Data Connections (collectively, ''Wireless Connections'') are not ''facilities of an exchange.'' [39] In sum, they urge that the Wireless Connections are not facilities of an exchange because they are services that are not offered by the Exchanges, nor are they offered by a group of persons constituting an exchange (within the definition of ''exchange'' in Section 3(a)(1) of the Act),[40] and further, that the Wireless Connections are not within the meaning of the definition of ''facility'' in Section 3(a)(2) of the Act.[41]

With respect to the definition of facility, the Exchanges state that the definition has four ''prongs,'' none of which describes the Wireless Connections.[42] First, the Exchanges take the position that the Wireless Connections are not the ''premises'' of the Exchanges, reasoning that the network that runs between IDS's equipment in the Mahwah Data Center and IDS's equipment in Third Party Data Centers, much of which is actually owned, operated, and maintained by a non-ICE entity, do not constitute ''premises.'' [43]

Second, the Exchanges state that the Wireless Connections are not the ''property'' of the Exchanges because they are ''services,'' and the underlying network is owned by ICE affiliates and a non-ICE entity.[44] Drawing further distinctions between the Exchanges and IDS, they also state that the Wireless Connections are a service offered strictly by IDS, over which the Exchanges lack control.[45]

Third, the Exchanges maintain that the Wireless Connections do not constitute ''any right to the use of such premises or property or service thereof for the purpose of effecting or reporting a transaction on an exchange,'' because the Exchanges do not have the right to use the Wireless Connections to effect or report a transaction on the Exchanges.[46] In support of this position, the Exchanges note that the Wireless Bandwidth Connections do not connect

[39] *See* Wireless I Notice, *supra* note 3, at 8938–39; Wireless II Notice, *supra* note 8, at 10753.

[40] Exchange Act Section 3(a)(1) defines the term ''exchange'' as: ''any organization, association, or group of persons, whether incorporated or unincorporated, which constitutes, maintains, or provides a market place or facilities for bringing together purchasers and sellers of securities or for otherwise performing with respect to securities the functions commonly performed by a stock exchange as that term is generally understood, and includes the market place and the market facilities maintained by such exchange.'' 15 U.S.C. 78c(a)(1). According to the Exchanges, the ICE affiliates are not an exchange, or part of the Exchange(s) because they do not provide a marketplace for bringing together purchasers and sellers. *See* Wireless I Notice, *supra* note 3, at 8940; Wireless II Notice, *supra* note 8, at 10754.

[41] Under Exchange Act Section 3(a)(2): ''The term 'facility' when used with respect to an exchange includes ''its premises, tangible or intangible property whether on the premises or not, any right to the use of such premises or property or any service thereof for the purpose of effecting or reporting a transaction on an exchange (including, among other things, any system of communication to or from the exchange, by ticker or otherwise, maintained by or with the consent of the exchange), and any right of the exchange to the use of any property or service.'' 15 U.S.C. 78c(a)(2).

[42] *See* Wireless I Notice, *supra* note 3, at 8940 (using bracketed numbers placed by the Exchanges); Wireless II Notice, *supra* note 8, at 10754–55 (same).

For a full recitation of the Exchanges' analysis of why the Wireless Bandwidth Connections and Wireless Market Data Connections are not, in their view, facilities of an exchange, *see* Wireless I Notice, *supra* note 3, at 8939–41; Wireless II Notice, *supra* note 8, at 10754–56 (same).

[43] *See* Wireless I Notice, *supra* note 3, at 8940 (also stating with respect to the Wireless Bandwidth Connections that the network does not connect to Exchange trading and execution systems); Wireless II Notice, *supra* note 8, at 10755. They add that the portion of the Mahwah Data Center where the ''exchange'' functions are performed (*i.e.,* the SRO Systems that bring together purchasers and sellers of securities and perform with respect to securities the functions commonly performed by a stock exchange) could be construed as the ''premises'' of the Exchange, but the same is not true for a wireless network that is almost completely outside of the Mahwah Data Center. *See id.*

[44] *See* Wireless I Notice, *supra* note 3, at 8940; Wireless II Notice, *supra* note 8, at 10755. The Exchanges add that the Act does not automatically collapse affiliates into the definition of an ''exchange,'' and something owned by an ICE affiliate is not owned by the Exchanges. *Id.*

[45] *See* Wireless I Notice, *supra* note 3 at 8939; Wireless II Notice, *supra* note 8, at 10755. The Exchanges state that although all ICE affiliates are ultimately controlled by ICE (as the indirect parent company), the Exchanges do not control IDS. *See id.*

[46] *See id.*

directly to the Exchanges' trading and execution systems[47] and the Wireless Market Data Connections are provided without the Exchanges involvement.[48]

Fourth, the Exchanges state that ''any right of the exchange to the use of any property or service'' does not describe the Wireless Connections because the Exchanges do not have the right to use the Wireless Connections.[49]

The Commission has received several comment letters expressing opposition to the Exchanges' position that the Wireless Bandwidth and/or Wireless Market Data Connections are not facilities of an exchange.[50] Broadly, commenters express the view that the Wireless Connections are designed to provide market participants the fastest means of communication into and out of the Exchanges to facilitate more competitive trading on the Exchanges, and that the Exchanges' analysis is one of form over substance.[51] More specifically, one commenter states that there can be ''no dispute that both the private bandwidth and market data wireless connectivity offerings constitute systems of communication 100% controlled and maintained by NYSE, for its own benefit and the benefit of its customers,'' and are therefore exchange facilities.[52]

Other commenters state that the Wireless Connections rely on the Exchanges' premises and property to effectuate systems of communication to and from the Exchanges,[53] and that they are designed for the purpose of effecting transactions on the Exchanges.[54] According to one of these commenters, the fact that orders and market data have to traverse a cross connect at the Mahwah Data Center before reaching the Exchanges' trading execution systems is an insufficient basis on which to conclude the Wireless Connections are not part of the facilities of an exchange.[55] This commenter expresses concern that the Exchanges are attempting to circumvent categorizing a product or service as a facility by moving ownership to a parent company or an affiliate of the Exchanges.[56] Another commenter urges that the Exchanges should not be able to defeat the operation of Exchange Act filing requirements by ''interpositioning'' an affiliate to provide connectivity to customers instead of providing it directly.[57]

The Exchanges submitted a response to these comment letters.[58] As an initial matter, the Exchanges urge that treating the Wireless Connections as ''facilities of an exchange'' would place an undue competitive burden on the ICE affiliates, as they would be required to make their services and fees public and subject to a Commission determination for consistency with the Act, whereas

[47] *See* Wireless I Notice, *supra* note 3, at 8939–41. The Exchanges urge that these connections are not provided for ''the purpose of effecting or reporting a transaction on'' the Exchanges, but rather are provided to facilitate the customer's interaction with itself—that these connections are essentially an ''empty pipe'' that a customer can use to communicate between its equipment in co-location and its equipment in the Third Party Data Center. *Id.* The Exchanges also state that they have no control over these connections, and put no content on them. Rather, customers have control over the data that flows over these connections, which may include the sending of trading orders to their equipment in co-location; the relay of Exchange market data, third party market data, and public quote feeds; as well as risk management, billing, compliance, or other market information. *Id.*

[48] *See* Wireless II Notice, *supra* note 8, at 10755. The Exchanges state that they do not know whether or when a customer has entered into an agreement for a Wireless Market Data Connection; have no right to approve or disapprove of the provision of a Wireless Market Data Connection, any more than it would if the provider were a third party; do not put the Selected Market Data content onto the Wireless Market Data Connections or send it to customers; and do not need to consent when a customer terminates a Wireless Market Data Connection. The Exchanges further state that it is not possible to use a Wireless Market Data Connection to effect a transaction on the Exchange, because they are one-way connections away from the Mahwah Data Center; that customers cannot use them to send trading orders or information of any sort to the Exchanges; and that the Exchanges do not use them to send confirmations of trades, and that they solely carry Selected Market Data. *See id.*

In addition, the Exchanges state that the statute's parenthetical language—''(including, among other things, any system of communication to or from the exchange, by ticker or otherwise, maintained by or with the consent of the exchange)''—is not an independent prong of the facility definition, but explains the preceding text. *See* Wireless I Notice, *supra* note 3, at 8941; Wireless II Notice, *supra* note 8, at 10755.

[49] *See id.*

[50] *See* Letter from Tyler Gellasch, Executive Director, Healthy Markets to Vanessa Countryman, Secretary, Commission, dated March 9, 2020 (''Healthy Markets Letter''); Letters from Jim Considine, Chief Financial Officer, McKay Brothers, LLC to Vanessa Countryman, Secretary, Commission, dated March 10, 2020 (''McKay Letter I''); Letter from Thomas M. Merritt, Deputy General Counsel, Virtu Financial to Vanessa Countryman, Secretary, Commission, dated March 10, 2020 (''Virtu Letter''); Letter from Gregory Babyak, Global Head of Regulatory Affairs, Bloomberg L.P. to Vanessa Countryman, Secretary, Commission, dated March 10, 2020 (''Bloomberg Letter'') (the Bloomberg Letter addresses Wireless I specifically); Letter from Andrew Stevens, General Counsel, IMC Financial Markets to Vanessa Countryman, Secretary, Commission, dated March 12, 2020 (''IMC Letter''); Letters from Matt Haraburda, President, XR Securities LLC to Vanessa Countryman, Secretary, Commission, dated March 18, 2020 (''XRS Letter'') (the XRS Letter addresses Wireless I specifically); Letters from Jim Considine, Chief Financial Officer, McKay Brothers, LLC to Vanessa Countryman, Secretary, Commission, dated March 17, 2020 (''McKay Letter II''); Letter from Ellen Greene, Managing Director, Securities Industry and Financial Markets Association, to Vanessa Countryman, Secretary, Commission, dated April 3, 2020 (''SIFMA Letter'') (the SIFMA Letter addresses Wireless II more specifically); Letter from Joanna Mallers, Secretary, FIA Principal Traders Group, to Vanessa Countryman, Secretary, Commission, dated April 27, 2020 (regarding SR–NYSENAT–2020–03); Letter from Joanna Mallers, Secretary, FIA Principal Traders Group, to Vanessa Countryman, Secretary, Commission, dated May 8, 2020 (regarding Wireless I and Wireless II) (''FIA Letter'').

[51] *See e.g.,* Virtu Letter at 4–6 (stating that the ''only purpose'' of the Wireless Connections is to facilitate faster connections for more competitive trading, and ''[c]ustomers paying for the Wireless Connections are clearly doing so only in order to competitively trade on the NYSE exchanges''). *See also* Healthy Markets Letter at 8 (stating that the Exchanges' analysis ignores the plain meaning of the Act); McKay Letter I at 4 (characterizing the Exchanges' facility analysis as superficial and flawed); IMC Letter at 2 (stating that ''the NYSE Pole offers direct access to [the NYSE] data center and thus its matching engine for purposes of transmitting data or orders)''; XRS Letter at 3 (stating that ''the Wireless Connections have the fastest means of access to the Exchange[] via the on-premises pole.'').

[52] *See* Virtu Letter at 5. According to this commenter, the contention that (i) the Wireless Bandwidth Connections are offered without the Exchanges knowing how they are used ''ignores the reality of market connectivity,'' and (ii) the Exchanges' do not have the right to use the Wireless Market Data Connections, is ''nonsensical,'' because the Exchanges' have ''control over the data transmission.'' *See id.* at 7.

[53] *See e.g.,* McKay Letter I at 4–7 (stating that the Wireless Connections are facilities of the Exchanges because they use the pole located on the premises of the Exchanges, and also intangible property in the form of technical specifications relating to the Wireless Connections, available through NYSE's website and branded with NYSE's trademark and logo). *See also* Bloomberg Letter at 4 (noting that the Wireless Connections are physically located on the property of the Mahwah Data Center); Healthy Markets Letter at 6 (noting that the Wireless Connections have access to the Exchanges' physical facility); IMC Letter at 2 (noting that the pole offers direct access to each Exchange's data center for purposes of transmitting data or orders).

[54] *See* Bloomberg Letter at 4 (''[I]t is clear that this is a system of communication to or from the exchange for 'effecting or reporting a transaction of the exchange.'''); McKay Letter I, at 6 (stating that ''The Wireless [Bandwidth] Connections are also facilities of the Exchange under the third prong of the definition because they may be used to effect transactions on the Exchange (and report transactions or other market data disseminated from the Exchange) using Exchange Property (*e.g.,* the NYSE Private Pole).''); IMC Letter at 2 (citing the McKay Letter I) (''The Wireless Connections are facilities of the Exchange, in that they use the Exchange's tangible and intangible property and are used for effecting or reporting a transaction.''). *See also* SIFMA Letter at 2 (opining that the Wireless Market Data Connections are akin to a ''ticker' system,'' but not conceding that that these connections do not meet other parts of the definition of facility).

[55] *See* McKay Letter I at 6.

[56] *See id.* at 5 n.20.

[57] *See* Healthy Markets Letter at 3–8. This commenter in particular expresses concern about Wireless Connections originating from the roof of Mahwah Data Center, which as noted below, the Exchanges state is not what is proposed. *See infra* note 95 and accompanying text.

[58] Letter from Elizabeth K. King, Chief Regulatory Officer, ICE, General Counsel & Corporate Secretary, NYSE, to Vanessa Countryman, Secretary, Commission, dated May 8, 2020, responding to comments on Wireless I and Wireless II (''NYSE Response'').

competitors are not subject to such requirements.[59] The Exchanges maintain that IDS acts independently of the Exchanges in offering the Wireless Connections, and that it is a vendor selling connectivity, just like other vendors.[60] In addition to reiterating the rationale provided in the Wireless I and Wireless II Notices, the Exchanges further state that, contrary to commenters' beliefs, they do not have a right to use the Wireless Connections to effect or report a transaction or otherwise, nor do they own the Mahwah Data Center or the pole on its grounds.[61]

2. Proposed Wireless Fee Schedule

In support of the proposed Wireless Fee Schedule, the Exchanges state that the Wireless I and Wireless II proposals are reasonable, equitable, and not unfairly discriminatory because use of the Wireless Connections is voluntary and alternatives to the Wireless Connections are available.[62] Addressing the competitive environment, the Exchanges state that there are at least three other vendors that offer market participants wireless network connections between the Mahwah Data Center and the Secaucus and Carteret Third Party Access Centers using wireless equipment installed on towers and buildings near the Mahwah Data Center.[63] With respect to the Wireless Market Data Connections specifically, they state that other providers offer connectivity to Selected Market Data in the Third Party Data Centers, and believe that a market participant in the Carteret or Secaucus Third Party Data Center may purchase a wireless connection to the NYSE and NYSE Arca Integrated Feed data feeds from at least two other providers of wireless connectivity.[64] The Exchanges believe that competing wireless connections offered by non-ICE entities provide connectivity at the ''same or similar speed'' as the Wireless Connections, and at the ''same or similar cost.''[65] In addition, the Exchanges state that some market participants have their own proprietary wireless networks, and that market participants may create a new proprietary wireless connection, connect through another market participant, or use fiber connections offered by the Exchanges, ICE affiliates, other service providers, and third party telecommunications providers.[66]

The Exchanges acknowledge that the Wireless Connections traverse wireless connections through a series of towers equipped with wireless equipment, including, in the case of the Carteret and Secaucus connections, a pole on the grounds of the Mahwah Data Center, and that third party access to the pole is restricted.[67] However, the Exchanges state that access to the pole is not required for third parties to establish wireless networks that can compete.[68] The Exchanges discount the significance of the location of the pole and the restrictions on access, urging that proximity to a data center is not the only determinant of a wireless network's speed.[69] The Exchanges also assert that latency is not the only consideration that a market participant may have in selecting a wireless network,[70] and that fiber network connections may sometimes be more attractive since they are more reliable and less susceptible to weather conditions.[71]

The Exchanges state that the proposed pricing is reasonable because the services are voluntary, market participants may to select the connectivity options that best suit their needs, and the fees reflect the benefit received by customers in term of lower latency over the fiber optics options.[72] The Exchanges believe that the proposals involve an equitable allocation of fees among market participants because such fees would apply to all market participants equally and would not apply differently to distinct types or sizes of market participants.[73] In addition, the services are ''completely voluntary,'' and the various options proposed offer market participants additional choices that they can select to best suit their needs.[74]

The Exchanges also state that, because numerous substitute connectivity providers are available, the proposals do not impose an unnecessary or inappropriate burden on competition.[75] According to the Exchanges, the proposals do not affect competition among national securities exchanges or between members of Exchanges, but rather that the Exchanges' filing of the proposals puts IDS at a competitive disadvantage relative to its commercial competitors that are not subject to filing requirements of Section 19(b) of the Act.[76]

Commenters disagree, arguing that the Exchanges have not met their burden of demonstrating that the Wireless Connections are consistent with the Act.[77] Broadly, commenters express concern that the Wireless Connections (those to the Secaucus and Carteret Third Party Data Centers) begin and end at an antenna on the grounds of the Mahwah Data Center, whereas competing services are not allowed on the Mahwah Data Center grounds to install wireless equipment and must instead end their wireless connections outside the grounds and use a wired connection into the Mahwah Data Center.[78] According to commenters, this difference means that the Wireless Connections have an insurmountable exclusive geographic latency advantage enabling the fastest possible access to the Exchanges that no competing service can offer.[79]

One commenter observes that ''conspicuously absent'' from the Exchanges' description of the Wireless Connections is that the pole on the

[59] *See id.* at 3.

[60] *See id.* at 8–16.

[61] *See id.* at 8–15. *See also id.* at 11 (''The definition of facility focuses on ownership and the right to use properties and services, not corporate relationships.'').

[62] *See* Wireless I Notice, *supra* note 3, at 8943–44; Wireless II Notice, *supra* note 8, at 10757–59.

[63] *See* Wireless I Notice, *supra* note 3, at 8942; Wireless II Notice, *supra* note 8, at 10757. The Exchanges acknowledge that they believe the Wireless Bandwidth Connections between the Mahwah Data Center and the Markham Third Party Data Center to be the first public, commercially available wireless connections between the two points, creating a new connectivity option for customers in Markham. *See id.*

[64] *See* Wireless II Notice, *supra* note 8, at 10757.

[65] *See* Wireless I Notice, *supra* note 3, at 8943; Wireless II Notice, *supra* note 8, at 10757.

[66] *See id.*

[67] *See* Wireless I Notice, *supra* note 3, at 8943; Wireless II Notice, *supra* note 8, at 10759. The Exchanges state that IDS does not sell rights to third parties to operate wireless equipment on the pole due to space limitations, security concerns, and the interference that would arise between equipment placed too closely together. *See id.*

[68] *See id.*

[69] *See id.* According to the Exchanges, other relevant variables include the wireless equipment utilized; the route of, and number of towers or buildings in, the network; and the fiber equipment used at either end of the connection. *See id.*

[70] *See id.* According to the Exchanges, other considerations may include the bandwidth of the offered connection; amount of network uptime; the equipment that the network uses; the cost of the connection; and the applicable contractual provisions. *See id.*

[71] *See* Wireless I Notice, *supra* note 3, at 8943; Wireless II Notice, *supra* note 8, at 10757.

[72] *See* Wireless I Notice, *supra* note 3, at 8943–44; Wireless II Notice, *supra* note 8, at 10757–58.

[73] *See* Wireless I Notice, *supra* note 3, at 8944; Wireless II Notice, *supra* note 8, at 10758.

[74] *See id.*

[75] *See* Wireless I Notice, *supra* note 3, at 8944–45; Wireless II Notice, *supra* note 8, at 10759.

[76] *See id.*

[77] *See e.g.,* McKay Letter I at 7–11; Bloomberg Letter at 4–5; XRS Letter at 2–4; Healthy Markets Letter at 8–10; IMC Letter at 2; Virtu Letter at 2–3. One commenter states that the Exchanges provide ''almost none'' of the information needed to establish that the Wireless Connections are consistent with the Act. *See* Healthy Markets Letter at 10.

[78] *See, e.g.,* McKay Letter I at 8; Virtu Letter at 3; IMC Letter at 2; XRS Letter at 1–2 (all generally questioning the basis of the disparity in access in to the Mahwah Data Center pole).

[79] *See, e.g.,* McKay Letter I at 8–10; McKay Letter II at 3; Bloomberg Letter at 4; IMC Letter at 2; XRS Letter at 1–2; Virtu Letter at 8–10; FIA Letter at 3.

Mahwah Data Center grounds is ''approximately 700 feet closer to the NYSE matching engine than the closest public poles available to all other wireless connectivity vendors.'' [80] This commenter underscores that ''timely receipt of market data is essential to trading competitively in today's markets,'' [81] and while it may not seem like a significant distance, ''the delay of data through 700 feet of fiber is meaningful in today's markets.'' [82] This commenter objects that the Exchanges have designed the Wireless Connections with a geographic latency advantage, enabling these connectivity offerings to be the fastest means of access to the Exchanges, and have not provided factual details sufficient to demonstrate why this advantage is not unfairly discriminatory and an inappropriate burden on competition.[83] Another commenter agrees that a 700 foot difference is material, and states that without details regarding (among other things) the magnitude of the latency advantage, its availability, and its impact on participants who are unable to avail themselves of the Wireless Connections, the Commission and the public will be unable to reasonably determine whether the proposed rule changes do not unfairly discriminate against market participants or unduly burden competition.[84] An additional commenter states that the contention that there is competition for exchange connectivity, and that other providers can offer the same or similar access and latency is ''simply false.'' [85] Some commenters express concern that the latency advantage that is unavailable to competing providers unfairly discriminates against market participants that do not choose to use the Wireless Connections.[86]

Commenters also address the proposed fees. One commenter states that IDS's exclusive geographic latency advantage establishes a monopoly service that enables it to charge ''exorbitant fees.'' [87] Another commenter states that given the exclusivity of the service, it would be difficult for the Exchanges to demonstrate how the proposed fees are fair and reasonable without providing an in-depth assessment of the costs of the service, and ''more difficult'' to justify how the fees are not unfairly discriminatory.[88] One commenter states that some market participants would be forced to purchase the fastest connectivity services to meet regulatory obligations, without regard to the price of such services.[89]

In the NYSE Response, the Exchanges maintain that the Wireless Connections are subject to competition, and state that the subject services are not new and have been provided since 2016.[90] In their view, the fact that competition has continued to proliferate over the intervening years demonstrates that use of the pole on the Mahwah Data Center grounds is not required for third parties to compete with the Wireless Connections.[91] Moreover, they assert that market participants have for years had a choice about what wireless services to use, ''and often choose not to use IDS.'' [92] The Exchanges state that disapproval of the proposals would result in less competition by reducing the availability of wireless connections between Mahwah and Secaucus or Carteret, because service would be available from only the two remaining commercial providers or would require customers to purchase space on a proprietary data network, if available.[93] For those customers seeking connections to Markham, Canada, the Exchanges believe that disapproval would mean that customers would be left with no wireless connectivity services.[94]

In response to comments that the Wireless Connections are offered on terms that are unfairly discriminatory because the Exchanges possess an exclusive geographic latency advantage that competitors cannot overcome, the Exchanges state that although having the pole 700 feet closer to the facility is a ''positive factor for latency,'' it is just one in a list of factors that determine the network's latency levels.[95] The Exchanges also defend IDS's choice to limit access to the Mahwah Data Center pole, noting that it is smaller than commercial poles and that space limitations, security concerns, and interference are practical factors that are a ''real concern.'' [96] They also state that IDS does not believe that its wireless network offers the fastest commercial option, and that market participants have chosen not to use it.[97]

In response to comments that they should provide additional information regarding the geographic latency advantage, the Exchanges characterize these requests as ''disingenuous'' because IDS cannot describe the magnitude of a geographic latency advantage it does not believe it has, and it is not privy to its competitors' latency information.[98]

III. Proceedings To Determine Whether To Approve or Disapprove the Proposed Rule Changes

The Commission is instituting proceedings pursuant to Section 19(b)(2)(B) of the Act to determine whether the Exchanges' proposed rule changes should be approved or disapproved.[99] Institution of proceedings does not indicate that the Commission has reached any conclusions with respect to any of the issues involved. Rather, the Commission seeks and encourages interested persons to provide additional comment on the proposed rule changes (Wireless I and Wireless II) to inform the Commission's analysis of whether to approve or disapprove the proposed rule changes.

[80] *See* McKay Letter I at 8–11 (also noting that its distance estimate is a good-faith, educated guess, but that additional transparency on the matter is needed). This commenter also states that distribution of Selected Market Data via the Wireless Market Data Connections is discriminatory because it is distributed in a different manner than Selected Market Data obtained otherwise than via the Wireless Connections. *See* McKay Letter II at 2–3.

[81] *Id.* at 3.

[82] *See* McKay Letter I at 8.

[83] *See* McKay Letter I at 2, 8–12; McKay Letter II at 2–3.

[84] *See* IMC Letter at 2. This commenter states, ''In a market where equidistant cabling is required for connections between a participant's co-located customer equipment to the Exchange's matching engine, NYSE's suggestion that the 700 foot difference between the NYSE Pole and others outside the their premises is immaterial is ludicrous.'' *Id.*

[85] *See* Virtu Letter at 9. This commenter also contrasts exclusive access to the private pole with the Exchanges' offering third-party firms the option to co-locate on their premises through other means. *See id.* at 2.

[86] *See* FIA Letter at 2; McKay Letter I at 11; XRS Letter at 2–3.

[87] *See* Virtu Letter at 2.

[88] *See* Bloomberg Letter at 5 (adding that the ''little to no attempt'' is made to discuss the implications of the exclusive privilege afforded to IDS to operate the Wireless Connections that are on the Mahwah Data Center property).

[89] *See* SIFMA Letter at 2–3 (addressing the Wireless Market Data Connections specifically, and stating that broker-dealers with best execution obligation may, for regulatory and competitive reasons, feel they must purchase the fastest connectivity services to remain in business).

[90] *See* NYSE Response at 6.

[91] *See id.*

[92] *Id.*

[93] *See id.* at 2.

[94] *See id.*

[95] *See id.* at 6. The Exchanges note that contrary to the suggestion of several commenters, the Wireless Connections do not use the Mahwah Data Center roof, nor does IDS expect to put any equipment on the roof for any services it offers or allow others to do so. *See id.* at 5.

[96] *See id.* at 7.

[97] *See id.* at 5, 13. The Exchanges represent that there are 11 current customers with Wireless Bandwidth Connections and 11 current customers with Wireless Market Data Connections. *See id.* at 2.

[98] *See id.* at 17, 18–19.

[99] 15 U.S.C. 78s(b)(2)(B).

Pursuant to Section 19(b)(2)(B) of the Act,[100] the Commission is providing notice of the grounds for possible disapproval under consideration:

- Whether the Exchanges have demonstrated how the proposals are consistent with Section 6(b)(4) of the Act, which requires that the rules of a national securities exchange ''provide for the equitable allocation of reasonable dues, fees, and other charges among its members and issuers and other persons using its facilities;'' [101]
- Whether the Exchanges have demonstrated how the proposals are consistent with Section 6(b)(5) of the Act, which requires, among other things, that the rules of a national securities exchange be ''designed to perfect the operation of a free and open market and a national market system'' and ''protect investors and the public interest,'' and not be ''designed to permit unfair discrimination between customers, issuers, brokers, or dealers;'' [102] and
- Whether the Exchanges have demonstrated how the proposals are consistent with Section 6(b)(8) of the Act, which requires that the rules of a national securities exchange ''not impose any burden on competition not necessary or appropriate in furtherance of the purposes of [the Act].'' [103]

As discussed in Section II above, the Exchanges made various arguments in support of the Wireless I and Wireless II proposals and the Commission received comment letters that expressed concerns regarding the proposals, including that the Exchanges did not provide sufficient information to establish that the proposals are consistent with the Act and the rules thereunder.

Under the Commission's Rules of Practice, the ''burden to demonstrate that a proposed rule change is consistent with the Exchange Act and the rules and regulations issued thereunder . . . is on the self-regulatory organization ['SRO'] that proposed the rule change.'' [104] The description of a proposed rule change, its purpose and operation, its effect, and a legal analysis of its consistency with applicable requirements must all be sufficiently detailed and specific to support an affirmative Commission finding.[105] Any failure of an SRO to provide this information may result in the Commission not having a sufficient basis to make an affirmative finding that a proposed rule change is consistent with the Act and the applicable rules and regulations.[106]

The Commission is instituting proceedings to allow for additional consideration and comment on the issues raised herein, including as to whether the proposals are consistent with the Act, specifically, with its requirements that the rules of a national securities exchange provide for the equitable allocation of reasonable dues, fees, and other charges among its members, issuers, and other persons using its facilities; are designed to perfect the operation of a free and open market and a national market system, and to protect investors and the public interest; are not designed to permit unfair discrimination between customers, issuers, brokers, or dealers; and do not impose any burden on competition that is not necessary or appropriate in furtherance of the purposes of the Act; [107] as well as any other provision of the Act, or the rules and regulations thereunder.

IV. Commission's Solicitation of Comments

The Commission requests written views, data, and arguments with respect to the concerns identified above as well as any other relevant concerns. Such comments should be submitted by June 12, 2020. Rebuttal comments should be submitted by June 26, 2020. Although there do not appear to be any issues relevant to approval or disapproval that would be facilitated by an oral presentation of views, data, and arguments, the Commission will consider, pursuant to Rule 19b–4, any request for an opportunity to make an oral presentation.[108]

The Commission asks that commenters address the sufficiency and merit of the Exchanges' statements in support of the proposal, in addition to any other comments they may wish to submit about the proposed rule change.

Interested persons are invited to submit written data, views, and arguments concerning the proposed rule changes, including whether the Wireless I and Wireless II proposals are consistent with the Act. Comments may be submitted by any of the following methods:

Electronic Comments

- Use the Commission's internet comment form (*http://www.sec.gov/rules/sro.shtml*); or
- Send an email to *rule-comments@sec.gov.* Please include File Nos. SR–NYSE–2020–05, SR–NYSEAMER–2020–05, SR–NYSEArca–2020–08, SR–NYSECHX–2020–02, SR–NYSENAT–2020–03, SR–NYSE–2020–11, SR–NYSEAMER–2020–10, SR–NYSEArca–2020–15, SR–NYSECHX–2020–05, SR–NYSENAT–2020–08 on the subject line.

Paper Comments

- Send paper comments in triplicate to Secretary, Securities and Exchange Commission, 100 F Street NE, Washington, DC 20549–1090.

All submissions should refer to File Nos. SR–NYSE–2020–05, SR–NYSEAMER–2020–05, SR–NYSEArca–2020–08, SR–NYSECHX–2020–02, SR–NYSENAT–2020–03, SR–NYSE–2020–11, SR–NYSEAMER–2020–10, SR–NYSEArca–2020–15, SR–NYSECHX–2020–05, and SR–NYSENAT–2020–08. The file numbers should be included on the subject line if email is used. To help the Commission process and review your comments more efficiently, please use only one method. The Commission will post all comments on the Commission's internet website (*http://www.sec.gov/rules/sro.shtml*). Copies of the submission, all subsequent amendments, all written statements with respect to the proposed rule change that are filed with the Commission, and all written communications relating to the proposed rule change between the Commission and any person, other than those that may be withheld from the public in accordance with the provisions of 5 U.S.C. 552, will be available for website viewing and printing in the Commission's Public Reference Room, 100 F Street NE, Washington, DC 20549, on official business days between the hours of 10:00 a.m. and 3:00 p.m. Copies of such filing also will be available for inspection and copying at the principal office of the Exchanges. All comments received will be posted without change. Persons submitting comments are cautioned that we do not redact or edit

[100] *Id.* Section 19(b)(2)(B) of the Act also provides that proceedings to determine whether to disapprove a proposed rule change must be concluded within 180 days of the date of publication of notice of the filing of the proposed rule change. *See id.* The time for conclusion of the proceedings may be extended for up to 60 days if the Commission finds good cause for such extension and publishes its reasons for so finding, or if the exchange consents to the longer period. *See id.*

[101] 15 U.S.C. 78f(b)(4).

[102] 15 U.S.C. 78f(b)(5).

[103] 15 U.S.C. 78f(b)(8).

[104] 17 CFR 201.700(b)(3).

[105] *See id.*

[106] *See id.*

[107] *See* 15 U.S.C. 78f(b)(4), (5), and (8).

[108] 15 U.S.C. 78s(b)(2). Section 19(b)(2) of the Act grants the Commission flexibility to determine what type of proceeding—either oral or notice and opportunity for written comments—is appropriate for consideration of a particular proposal by an SRO. *See* Securities Acts Amendments of 1975, Report of the Senate Committee on Banking, Housing and Urban Affairs to Accompany S. 249, S. Rep. No. 75, 94th Cong., 1st Sess. 30 (1975).

personal identifying information from comment submissions. You should submit only information that you wish to make publicly available. All submissions should refer to File Nos. SR–NYSE–2020–05, SR–NYSEAMER–2020–05, SR–NYSEArca–2020–08, SR–NYSECHX–2020–02, SR–NYSENAT–2020–03, SR–NYSE–2020–11, SR–NYSEAMER–2020–10, SR–NYSEArca–2020–15, SR–NYSECHX–2020–05, and SR–NYSENAT–2020–08 and should be submitted on or before June 12, 2020. Rebuttal comments should be submitted by June 26, 2020.

For the Commission, by the Division of Trading and Markets, pursuant to delegated authority.[109]

J. Matthew DeLesDernier,

Assistant Secretary.

[FR Doc. 2020–11045 Filed 5–21–20; 8:45 am]

BILLING CODE 8011–01–P

DEPARTMENT OF TRANSPORTATION

Federal Railroad Administration

[Docket No. FRA–2020–0027–N–10]

Proposed Agency Information Collection Activities; Comment Request

AGENCY: Federal Railroad Administration (FRA), U.S. Department of Transportation (DOT).

ACTION: Notice of information collection; request for comment.

SUMMARY: Under the Paperwork Reduction Act of 1995 (PRA) and its implementing regulations, this notice announces that FRA is forwarding the Information Collection Requests (ICRs) abstracted below to the Office of Management and Budget (OMB) for review and comment. These ICRs describe the information collections and their expected burdens. On March 16, 2020, FRA published a notice providing a 60-day period for public comment on the ICRs.

DATES: Interested persons are invited to submit comments on or before June 22, 2020.

ADDRESSES: Written comments and recommendations for the proposed ICRs should be sent within 30 days of publication of this notice to *www.reginfo.gov/public/do/PRAMain.* Find the particular ICR by selecting ''Currently under 30-day Review—Open for Public Comments'' or by using the search function.

FOR FURTHER INFORMATION CONTACT: Ms. Hodan Wells, Information Collection Clearance Officer, Office of Railroad Safety, Regulatory Analysis Division, Federal Railroad Administration, 1200 New Jersey Avenue SE, Washington, DC 20590.

SUPPLEMENTARY INFORMATION: The PRA, 44 U.S.C. 3501–3520, and its implementing regulations, 5 CFR part 1320, require Federal agencies to issue two notices seeking public comment on information collection activities before OMB may approve paperwork packages. *See* 44 U.S.C. 3506, 3507; 5 CFR 1320.8 through 1320.12. On March 16, 2020, FRA published a 60-day notice in the **Federal Register** soliciting comment on the ICRs for which it is now seeking OMB approval. *See* 85 FR 15020. FRA received no comments in response to this notice.

Before OMB decides whether to approve these proposed collections of information, it must provide 30 days for public comment. Federal law requires OMB to approve or disapprove paperwork packages between 30 and 60 days after the 30-day notice is published. 44 U.S.C. 3507(b)–(c); 5 CFR 1320.12(d); *see also* 60 FR 44978, 44983, Aug. 29, 1995. OMB believes the 30-day notice informs the regulated community to file relevant comments and affords the agency adequate time to digest public comments before it renders a decision. 60 FR 44983, Aug. 29, 1995. Therefore, respondents should submit their respective comments to OMB within 30 days of publication to best ensure having their full effect.

Comments are invited on the following ICRs regarding: (1) Whether the information collection activities are necessary for FRA to properly execute its functions, including whether the information will have practical utility; (2) the accuracy of FRA's estimates of the burden of the information collection activities, including the validity of the methodology and assumptions used to determine the estimates; (3) ways for FRA to enhance the quality, utility, and clarity of the information being collected; and (4) ways to minimize the burden of information collection activities on the public, including the use of automated collection techniques or other forms of information technology.

The summaries below describe the ICRs that FRA will submit for OMB clearance as the PRA requires:

Title: Railroad Communications.

OMB Control Number: 2130–0524.

Abstract: This collection of information is used by FRA to promote safety in rail operations and to ensure compliance by railroads and their employees with all the requirements set forth in 49 CFR part 220. FRA amended its radio standards and procedures to promote compliance by making the regulations more flexible; require wireless communications devices, including radios, for specified classifications of railroad operations and roadway workers; and retitle this part to reflect its coverage of other means of wireless communications, such as cellular telephones and data radio terminals, to convey emergency and need-to-know information. The amended rule established safe, uniform procedures covering the use of radio and other wireless communications within the railroad industry.

Type of Request: Extension with change (revised estimates) of a currently approved collection.

Affected Public: Businesses.

Form(s): N/A.

Respondent Universe: 746 railroads.

Frequency of Submission: On occasion.

Total Estimated Annual Responses: 4,119,004.

Total Estimated Annual Burden: 95,902 hours.

Total Estimated Annual Burden Hour Dollar Cost Equivalent: $7,288,552.

Title: Passenger Train Emergency Systems.

OMB Control Number: 2130–0576.

Abstract: This information collection is due to passenger train emergency systems regulations under 49 CFR part 238. The purpose of this part is to prevent collisions, derailments, and other occurrences involving railroad passenger equipment that cause injury or death to railroad employees, railroad passengers, or the general public, and to mitigate the consequences of such occurrences to the extent they cannot be prevented.

In its final rule issued on November 29, 2013 (*see* 78 FR 71785), FRA added requirements for emergency passage through vestibule and other interior passageway doors and enhanced emergency egress and rescue signage requirements. FRA also established requirements for low-location emergency exit path markings to assist occupants in reaching and operating emergency exits, particularly under conditions of limited visibility. Moreover, FRA added standards to ensure emergency lighting systems are provided in all passenger cars and enhanced requirements for the survivability of emergency lighting systems in new passenger cars.

Type of Request: Extension with change (revised estimates) of a currently approved collection.

Affected Public: Businesses (railroads).

[109] 17 CFR 200.30–3(a)(57).

Form(s): N/A.

Respondent Universe: 34 railroads.

Frequency of Submission: On occasion.

Total Estimated Annual Responses: 8,310.

Total Estimated Annual Burden: 859 hours.

Total Estimated Annual Burden Hour Dollar Cost Equivalent: $65,269.

Under 44 U.S.C. 3507(a) and 5 CFR 1320.5(b) and 1320.8(b)(3)(vi), FRA informs all interested parties that it may not conduct or sponsor, and a respondent is not required to respond to, a collection of information unless it displays a currently valid OMB control number.

Authority: 44 U.S.C. 3501–3520.

Brett A. Jortland,

Deputy Chief Counsel.

[FR Doc. 2020–11021 Filed 5–21–20; 8:45 am]

BILLING CODE 4910–06–P

DEPARTMENT OF THE TREASURY

Bureau of the Fiscal Service

Proposed Collection of Information: Direct Deposit Sign-Up Form

ACTION: Notice and request for comments.

SUMMARY: The Department of the Treasury, as part of its continuing effort to reduce paperwork and respondent burden, invites the general public and other Federal agencies to take this opportunity to comment on proposed and/or continuing information collections, as required by the Paperwork Reduction Act of 1995. Currently the Bureau of the Fiscal Service within the Department of the Treasury is soliciting comments concerning the Direct Deposit Sign-Up Form.

DATES: Written comments should be received on or before July 21, 2020 to be assured of consideration.

ADDRESSES: Direct all written comments and requests for additional information to Bureau of the Fiscal Service, Bruce A. Sharp, Room #4006–A, P.O. Box 1328, Parkersburg, WV 26106–1328, or *bruce.sharp@fiscal.treasury.gov.*

SUPPLEMENTARY INFORMATION:

Title: Direct Deposit Sign-Up Form.

OMB Number: 1530–0050.

Form Number: FS Form 5396.

Abstract: The information is collected to process requests for direct deposit of a Series HH or Series H bond interest payment or a savings bond redemption payment to a financial institution.

Current Actions: Revision of a currently approved collection.

Type of Review: Regular.

Affected Public: Individuals or Households.

Estimated Number of Respondents: 24,000.

Estimated Time per Respondent: 10 minutes.

Estimated Total Annual Burden Hours: 4000.

Request for Comments: Comments submitted in response to this notice will be summarized and/or included in the request for OMB approval. All comments will become a matter of public record. Comments are invited on: 1. Whether the collection of information is necessary for the proper performance of the functions of the agency, including whether the information shall have practical utility; 2. the accuracy of the agency's estimate of the burden of the collection of information; 3. ways to enhance the quality, utility, and clarity of the information to be collected; 4. ways to minimize the burden of the collection of information on respondents, including through the use of automated collection techniques or other forms of information technology; and 5. estimates of capital or start-up costs and costs of operation, maintenance, and purchase of services to provide information.

Dated: May 18, 2020.

Bruce A. Sharp,

Bureau PRA Clearance Officer.

[FR Doc. 2020–11020 Filed 5–21–20; 8:45 am]

BILLING CODE 4810–AS–P

DEPARTMENT OF THE TREASURY

[Docket No. TREAS–DO–2020–0007]

Development and Potential Issuance of Treasury Floating Rate Notes Indexed to the Secured Overnight Financing Rate

AGENCY: Department of the Treasury.

ACTION: Notice and request for information.

SUMMARY: The Department of the Treasury (Treasury) is requesting comments on the possibility of issuing a floating rate note (FRN) indexed to the Secured Overnight Financing Rate (SOFR) published by the SOFR Administrator, currently the Federal Reserve Bank of New York (FRBNY). Treasury has not made a decision whether to issue FRNs indexed to SOFR (SOFR-indexed FRNs). Treasury will continue to weigh the merits of SOFR-indexed FRNs, and comments received as part of this request for information will serve as valuable input into this decision.

DATES: Comments are due by July 6, 2020.

ADDRESSES: You may submit comments using any of the following methods:

Federal eRulemaking Portal: www.regulations.gov. Follow the instructions on the website for submitting comments.

Email: govsecreg@fiscal.treasury.gov. Include docket number TREAS–DO–2020–0007 in the subject line of the message.

All submissions should refer to docket number TREAS–DO–2020–0007. Please submit your comments using only one method, along with your full name and mailing address. We will post all comments on *www.regulations.gov* and *www.treasurydirect.gov.* In general, comments received, including attachments and other supporting materials, are part of the public record and are available to the public. Do not submit any information in your comments or supporting materials that you consider confidential or inappropriate for public disclosure.

FOR FURTHER INFORMATION CONTACT: Fred Pietrangeli, Director, Office of Debt Management, Office of the Assistant Secretary for Financial Markets, at *debtmanagement@treasury.gov* or *Fredrick.Pietrangeli@treasury.gov.* Questions about submitting comments should be directed to Lori Santamorena, Government Securities Regulations Staff, at (202) 504–3632 or *govsecreg@fiscal.treasury.gov.*

SUPPLEMENTARY INFORMATION:

I. Background

Treasury continually seeks to finance the government at the lowest cost over time, manage its liability profile, foster healthy secondary markets, and expand the investor base for Treasury securities. Treasury is examining potential new products in pursuit of these goals.

Following substantial analysis and consideration of input from market participants, in 2014 Treasury began issuing FRNs indexed to the 13-week Treasury bill rate (13-week T-bill FRNs). Since their launch, Treasury has issued more than $1.1 trillion of 13-week T-bill FRNs. A Treasury analysis released in 2017 showed that issuing 13-week T-bill FRNs had reduced realized interest costs by $1.3 billion (when compared to 2-year fixed-rate notes).[1]

[1] *See* 4th Quarter 2017 Treasury Borrowing Advisory Committee Discussion Charts, available at *https://www.treasury.gov/resource-center/data-chart-center/quarterly-refunding/Documents/Q42017CombinedChargesforArchives.pdf.*

In light of the success of the 13-week T-bill FRN program and recent market developments, Treasury is exploring the possibility of issuing SOFR-indexed FRNs.[2] Treasury has discussed the potential issuance of SOFR-indexed FRNs with the Treasury Borrowing Advisory Committee (TBAC),[3] the primary dealers,[4] and other Treasury market participants. These discussions have provided helpful feedback,[5] and Treasury now seeks additional views from the public on the questions below.

Treasury's primary motivation for exploring SOFR-indexed FRNs is the consideration of new debt products that can be issued at the lowest cost of financing for the U.S. government. Treasury is cognizant that its issuance decisions can have broader effects on other issuers and market practices. Regardless of any decision about issuing SOFR-indexed FRNs, Treasury, as an ex-officio member of the Alternative Reference Rates Committee (ARRC), is committed to promoting the transition away from U.S. dollar London Interbank Offered Rate (LIBOR).[6]

II. Solicitation for Comments

Treasury invites views on the following topics. Please include: (1) The data or reasons, including examples, supporting any opinions or conclusions; (2) alternative approaches and options that should be considered, if any; and (3) any specific comments regarding general terms and conditions for the sale and issuance of Treasury SOFR-indexed FRNs.

1. Market Demand

1.1 Which types of investors would be the primary buyers of Treasury SOFR-indexed FRNs? Would Treasury SOFR-indexed FRNs attract new investor types or additional demand from existing Treasury investors? Assuming the possibility of a 1-year or 2-year maturity, how would the tenor of a Treasury SOFR-indexed FRN affect demand?

1.2 Please estimate annual demand for Treasury SOFR-indexed FRNs. Would demand be greater for a shorter tenor? How would potential growth in issuance of SOFR-indexed FRNs by other issuers affect long-term demand for Treasury SOFR-indexed FRNs?

2. Pricing and Liquidity

2.1 Would introducing a Treasury SOFR-indexed FRN help Treasury finance the government at the lowest cost over time? Why or why not?

2.2 How would you expect a Treasury SOFR-indexed security to price relative to a comparable maturity 13-week T-bill FRN security? How would this pricing vary across the economic cycle and interest rate environments? Please provide pricing estimates.

2.3 SOFR has risen significantly for certain short time periods, such as around some ends of months, quarters, and years. To what extent would such patterns, if they continue, affect the interest cost for Treasury on a SOFR-indexed FRN, the interest payments of which would be based on a SOFR averaged or compounded rate over a longer interest accrual period? To what extent would investors be willing to bid lower discount margins at auctions for Treasury SOFR-indexed FRNs in expectation of such patterns continuing? Please elaborate.

2.4 During the global financial crisis, repurchase agreement rates were persistently higher than Treasury bill rates. More recently, during the COVID–19 outbreak, liquidity in Treasury and other markets (including repurchase agreement markets) exhibited signs of stress. How would potential future periods of market stress affect SOFR? In a potential future period of market stress, how might interest costs for Treasury differ between a Treasury SOFR-indexed FRN and the 13-week T-bill FRN? Please elaborate.

2.5 How liquid would Treasury SOFR-indexed FRNs be in secondary markets? Please compare the expected liquidity of Treasury SOFR-indexed FRNs to Treasury bills, the existing 13-week T-bill FRN, and off-the-run short-dated coupons.

3. Security Structure

3.1 What are the primary considerations Treasury should evaluate when structuring a Treasury SOFR-indexed FRN? How would different potential security structures affect investment decisions by market participants, including with respect to activity in derivatives markets?

3.2 Some previously gathered feedback has suggested a 1-year final maturity for original issuance of a Treasury SOFR-indexed FRN. Is this maturity or another maturity preferable for a Treasury SOFR-indexed FRN? Please elaborate.

3.3. Is a quarterly issuance frequency with two reopenings appropriate for a Treasury SOFR-indexed FRN, similar to the existing 13-week T-bill FRN? What factors should Treasury consider in making this decision?

3.4 When during the month should Treasury auction SOFR-indexed FRNs? When should auctions settle?

3.5 Should interest on Treasury SOFR-indexed FRNs be calculated based on a simple average or a compounded average of SOFR? Should Treasury consider indexing the security to an average rate based on SOFR, such as those recently published by FRBNY as administrator for SOFR?[7] If so, what would be the optimal averaging period for a SOFR-indexed FRN?

3.6 What coupon frequency should be used for a Treasury SOFR-indexed FRN? Note that the existing 13-week T-bill FRN pays coupons quarterly. Would a semi-annual, or other coupon frequency be preferred? When during the month should coupon and principal payments be made?

3.7 Should the index rate for a Treasury SOFR-indexed FRN reset daily, weekly, or at some other frequency?

3.8 Should a Treasury SOFR-indexed FRN incorporate a lockout (*i.e.,* last *k* rates for an interest period set at SOFR *k* days before the period ends), a lookback or ''lag'' (*i.e.,* for every day in the interest period, use SOFR from *k* days earlier), or a payment delay (*i.e.,* coupon and principal payments made *k* days after the end of the interest period) in its structure?[8] If so, what values would be appropriate for each attribute?

---

[2] *See* October 30, 2019 Quarterly Refunding Policy Statement, available at *https://home.treasury.gov/news/press-releases/sm810* and February 5, 2020 Quarterly Refunding Policy Statement available at *https://home.treasury.gov/news/press-releases/sm896.*

[3] TBAC is a federal advisory committee that advises Treasury on debt management and other topics. *See* 2nd Quarter 2019 TBAC Discussion Charts, available at *https://www.treasury.gov/resource-center/data-chart-center/quarterly-refunding/Documents/q22019CombinedChargesforArchives.pdf* and 3rd Quarter 2019 TBAC Discussion Charts, available at *https://www.treasury.gov/resource-center/data-chart-center/quarterly-refunding/Documents/q32019CombinedChargesforArchives.pdf.*

[4] The primary dealers serve as trading counterparties to FRBNY in its implementation of monetary policy. Primary dealers are also required to participate in all Treasury marketable securities auctions.

[5] *See* May 6, 2020 Quarterly Refunding Policy Statement, available at *https://home.treasury.gov/news/press-releases/sm1001.*

[6] The ARRC is a group of private-market participants convened by the Board of Governors of the Federal Reserve System and FRBNY to help transition from U.S. dollar LIBOR to SOFR. See *https://www.newyorkfed.org/arrc.*

[7] For more information on the SOFR averages, see FRBNY, Statement Introducing the SOFR Averages and Index (March 2, 2020), available at *https://www.newyorkfed.org/markets/opolicy/operating_policy_200302.*

[8] See ARRC, A User's Guide to SOFR (April 2019), pp. 10–11, available at *https://www.newyorkfed.org/medialibrary/Microsites/arrc/files/2019/Users_Guide_to_SOFR.pdf*), and ARRC, ARRC Floating Rate Notes Working Group Statement On Use Of The SOFR Index (May 2020), available at *https://www.newyorkfed.org/medialibrary/Microsites/arrc/files/2020/Statement_on_SOFR_Index.pdf.*

Please explain relevant considerations for these features.

3.9 In light of FRBNY's data contingency procedures for the publication of SOFR,[9] what contingency measures should Treasury consider incorporating into the terms of a SOFR-indexed FRN if SOFR, or an average rate based on SOFR, is temporarily unavailable or revised?

4. Existing 13-Week T-Bill FRN

4.1 If Treasury decides to issue SOFR-indexed FRNs, what, if any, changes should Treasury make to the existing 13-week T-bill FRN issuance program?

4.2 Should Treasury issue FRNs indexed to both indices, or should Treasury consolidate FRN issuance on a single index?

4.3 If there is not sufficient demand for both Treasury FRNs to coexist, which index would generate the greater long-term demand and better meet Treasury's issuance objectives? Please elaborate.

4.4 Should Treasury consider issuing 13-week T-bill FRNs with a 1-year final maturity? How should the decision regarding issuance of Treasury SOFR-indexed FRNs affect this possibility?

5. Market Transition

5.1 What proportion of likely investors is currently operationally ready to purchase Treasury SOFR-indexed FRNs? For those investors that are not ready, what are the main impediments? How much lead time and investment would be required for additional investors to become operationally ready to purchase Treasury SOFR-indexed FRNs? Would any of the security structure choices mentioned in Section 3 above affect the operational readiness of likely investors?

5.2 To what extent would Treasury's issuance of SOFR-indexed FRNs advance the overall market transition away from U.S. dollar LIBOR? How would different market segments (*e.g.,* FRNs, derivatives, business loans, consumer products) be affected by Treasury's decision to issue SOFR-indexed FRNs? What effect would Treasury's issuance of SOFR-indexed FRNs have on the overall market transition away from LIBOR beyond that caused by current issuance of SOFR-indexed FRNs by other issuers? Please provide specific details of the cause and effect relationships you expect.

Brian Smith,

Deputy Assistant Secretary for Federal Finance.

[FR Doc. 2020–11160 Filed 5–20–20; 4:15 pm]

BILLING CODE 4810–AS–P

[9] For additional information, see FRBNY, Additional information about the Treasury Repo Reference Rates, available at *https://www.newyorkfed.org/markets/treasury-repo-reference-rates-information.*

DEPARTMENT OF VETERANS AFFAIRS

[OMB Control No. 2900–0178]

Agency Information Collection Activity Under OMB Review: Monthly Certification of On-the-Job and Apprenticeship Training

AGENCY: Veterans Benefits Administration, Department of Veterans Affairs.

ACTION: Notice.

SUMMARY: In compliance with the Paperwork Reduction Act (PRA) of 1995, this notice announces that the Veterans Benefits Administration, Department of Veterans Affairs, will submit the collection of information abstracted below to the Office of Management and Budget (OMB) for review and comment. The PRA submission describes the nature of the information collection and its expected cost and burden and it includes the actual data collection instrument.

DATES: Written comments and recommendations for the proposed information collection should be sent within 30 days of publication of this notice to *www.reginfo.gov/public/do/PRAMain.* Find this particular information collection by selecting ''Currently under 30-day Review—Open for Public Comments'' or by using the search function. Refer to ''OMB Control No. 2900–0178.

FOR FURTHER INFORMATION CONTACT: Danny S. Green at (202) 421–1354.

SUPPLEMENTARY INFORMATION:

Authority: 38 U.S.C. 3680(c).

Title: Monthly Certification of On-The-Job Training, VA Form 22–6553d and VA Form 22–6553d–1.

OMB Control Number: 2900–0178.

Type of Review: Revision of a currently approved collection.

Abstract: Schools and training establishments complete the form to report whether the trainee's number of hours worked and/or to report the trainee's date of termination. VA Form 22–6553d–1 is an identical printed copy of VA Form 22–6553d. VA Form 22–6553d–1 is used when the computer-generated version of VA Form 22–6553d is not available. VA uses the data collected to process a trainee's educational benefit claim.

An agency may not conduct or sponsor, and a person is not required to respond to a collection of information unless it displays a currently valid OMB control number. The **Federal Register** Notice with a 60-day comment period soliciting comments on this collection of information was published at 85 FR 39 on February 27, 2020, page 11454.

Affected Public: Private Sector.

Estimated Annual Burden: 5,693 hours.

Estimated Average Burden per Respondent: 10 minutes.

Frequency of Response: On occasion (9 responses per respondent annually).

Estimated Number of Respondents: 3,795 (34,155 responses).

By direction of the Secretary.

Danny S. Green,

VA PRA Clearance Officer, Office of Quality, Performance and Risk, Department of Veterans Affairs.

[FR Doc. 2020–11085 Filed 5–21–20; 8:45 am]

BILLING CODE 8320–01–P

FEDERAL REGISTER

Vol. 85 Friday,

No. 100 May 22, 2020

Part II

Environmental Protection Agency

National Emission Standards for Hazardous Air Pollutants: Coal- and Oil-Fired Electric Utility Steam Generating Units—Reconsideration of Supplemental Finding and Residual Risk and Technology Review; Final Rule

ENVIRONMENTAL PROTECTION AGENCY

40 CFR Part 63

[EPA–HQ–OAR–2018–0794; FRL–10008–60–OAR]

RIN 2060–AT99

National Emission Standards for Hazardous Air Pollutants: Coal- and Oil-Fired Electric Utility Steam Generating Units—Reconsideration of Supplemental Finding and Residual Risk and Technology Review

AGENCY: Environmental Protection Agency (EPA).

ACTION: Final rule.

SUMMARY: The U.S. Environmental Protection Agency (EPA) is revising its response to the U.S. Supreme Court decision in *Michigan* v. *EPA,* which held that the EPA erred by not considering cost in its determination that regulation under section 112 of the Clean Air Act (CAA) of hazardous air pollutant (HAP) emissions from coal- and oil-fired electric utility steam generating units (EGUs) is appropriate and necessary. After primarily comparing the cost of compliance relative to the benefits of HAP emission reduction from regulation, the EPA finds that it is not ''appropriate and necessary'' to regulate HAP emissions from coal- and oil-fired EGUs, thereby reversing the Agency's previous conclusion under CAA section 112(n)(1)(A) and correcting flaws in the Agency's prior response to *Michigan* v. *EPA.* We further find that finalizing this new response to *Michigan* v. *EPA* will not remove the Coal- and Oil-Fired EGU source category from the CAA section 112(c) list of sources that must be regulated under CAA section 112(d) and will not affect the existing CAA section 112(d) emissions standards that regulate HAP emissions from coal- and oil-fired EGUs. The EPA is also finalizing the residual risk and technology review (RTR) conducted for the Coal- and Oil-Fired EGU source category regulated under national emission standards for hazardous air pollutants (NESHAP), commonly referred to as the Mercury and Air Toxics Standards (MATS). Based on the results of the RTR analyses, the Agency is not promulgating any revisions to the MATS rule.

DATES: Effective May 22, 2020.

ADDRESSES: The EPA has established a docket for these actions under Docket ID No. EPA–HQ–OAR–2018–0794.[1] All documents in the docket are listed on the *https://www.regulations.gov/* website. Although listed, some information is not publicly available, *e.g.,* confidential business information or other information whose disclosure is restricted by statute. Certain other material, such as copyrighted material, is not placed on the internet and will be publicly available only in hard copy form. Publicly available docket materials are available either electronically through *https://www.regulations.gov/,* or in hard copy at the EPA Docket Center, WJC West Building, Room Number 3334, 1301 Constitution Ave. NW, Washington, DC. The Public Reading Room hours of operation are 8:30 a.m. to 4:30 p.m. Eastern Standard Time (EST), Monday through Friday. The telephone number for the Public Reading Room is (202) 566–1744, and the telephone number for the Docket Center is (202) 566–1742.

FOR FURTHER INFORMATION CONTACT: For questions about these final actions, contact Mary Johnson, Sector Policies and Programs Division (D243–01), Office of Air Quality Planning and Standards, U.S. Environmental Protection Agency, Research Triangle Park, North Carolina 27711; telephone number: (919) 541–5025; and email address: *johnson.mary@epa.gov.* For specific information regarding the risk modeling methodology, contact Mark Morris, Health and Environmental Impacts Division (C539–02), Office of Air Quality Planning and Standards, U.S. Environmental Protection Agency, Research Triangle Park, North Carolina 27711; telephone number: (919) 541–5416; and email address: *morris.mark@epa.gov.* For information about the applicability of the NESHAP to a particular entity, contact your EPA Regional representative as listed in 40 CFR 63.13 (General Provisions).

SUPPLEMENTARY INFORMATION:

Preamble acronyms and abbreviations. We use multiple acronyms and terms in this preamble. While this list may not be exhaustive, to ease the reading of this preamble and for reference purposes, the EPA defines the following terms and acronyms here:

CAA Clean Air Act
CAMR Clean Air Mercury Rule
CEMS continuous emissions monitoring systems
CFR Code of Federal Regulations
CRA Congressional Review Act
EGU electric utility steam generating unit
EPA Environmental Protection Agency
EPRI Electric Power Research Institute
HAP hazardous air pollutant(s)
HCl hydrochloric acid
HF hydrogen fluoride
HQ hazard quotient
ICR information collection request
km kilometer
MACT maximum achievable control technology
MATS Mercury and Air Toxics Standards
MIR maximum individual risk
MW megawatt
NAAQS National Ambient Air Quality Standards
NAICS North American Industry Classification System
NEI National Emissions Inventory
NESHAP national emission standards for hazardous air pollutants
NOAEL no-observed-adverse-effect-level
NO_X nitrogen oxides
NTTAA National Technology Transfer and Advancement Act
OAQPS Office of Air Quality Planning and Standards
OMB Office of Management and Budget
PB–HAP hazardous air pollutants known to be persistent and bio-accumulative in the environment
PDF Portable Document Format
PM particulate matter
$PM_{2.5}$ fine particulate matter
POM polycyclic organic matter
PRA Paperwork Reduction Act
RDL representative detection level
REL reference exposure level
RFA Regulatory Flexibility Act
RIA regulatory impact analysis
RTR residual risk and technology review
SO_2 sulfur dioxide
TOSHI target organ-specific hazard index
tpy tons per year
UMRA Unfunded Mandates Reform Act

Background information. With this action, the EPA is, after review and consideration of public comments, finalizing two aspects of the 2019 Proposal. On February 7, 2019, the EPA proposed to find that it is not ''appropriate and necessary'' to regulate HAP emissions from coal- and oil-fired EGUs, thereby reversing the Agency's prior conclusion under CAA section 112(n)(1)(A) and correcting flaws in the Agency's prior response to *Michigan* v. *EPA,* 135 S. Ct. 2699 (2015). 84 FR 2670 (2019 Proposal). We further proposed that finalizing this new response to *Michigan* v. *EPA* would not remove the Coal- and Oil-Fired EGU source category from the CAA section 112(c) list of sources that must be regulated under CAA section 112(d) and would not

[1] As explained in a memorandum to the docket, the docket for these actions include the documents and information, in whatever form, in Docket ID Nos. EPA–HQ–OAR–2009–0234 (National Emission Standards for Hazardous Air Pollutants for Coal- and Oil-fired Electric Utility Steam Generating Units), EPA–HQ–OAR–2002–0056 (National Emission Standards for Hazardous Air Pollutants for Utility Air Toxics; Clean Air Mercury Rule (CAMR)), and Legacy Docket ID No. A–92–55 (Electric Utility Hazardous Air Pollutant Emission Study). *See* memorandum titled *Incorporation by reference of Docket Number EPA–HQ–OAR–2009–0234, Docket Number EPA–HQ–OAR–2002–0056, and Docket Number A–92–55 into Docket Number EPA–HQ–OAR–2018–0794* (Docket ID Item No. EPA–HQ–OAR–2018–0794–0005).

affect the existing CAA section 112(d) emissions standards that regulate HAP emissions from coal- and oil-fired EGUs. In the same action, the EPA also proposed the results of the RTR of the NESHAP for Coal- and Oil-Fired EGUs. In this action, we are taking final action with regard to these aspects of the 2019 Proposal.[2] We summarize some of the more significant comments regarding the proposed rule and provide our responses in this preamble. A summary of all other significant comments on the 2019 Proposal and the EPA's responses to those comments is available in the document titled *Final Supplemental Finding and Risk and Technology Review for the NESHAP for Coal- and Oil-Fired EGUs Response to Public Comments on February 7, 2019 Proposal* (Response-to-Comment (RTC) document), in Docket ID No. EPA–HQ–OAR–2018–0794.

Organization of this document. The information in this preamble is organized as follows:

I. General Information
A. Do these actions apply to me?
B. Where can I get a copy of this document and other related information?
C. Judicial Review and Administrative Reconsideration
II. Appropriate and Necessary Finding
A. Overview
B. Background
C. EPA's Finding Under CAA Section 112(n)(1)(A)
D. Effects of This Reversal of the Supplemental Finding
III. Background on the RTR Action
A. What is the statutory authority for this action?
B. What is the Coal- and Oil-Fired EGU source category and how does the NESHAP regulate HAP emissions from the source category?
C. What changes did we propose for the Coal- and Oil-Fired EGU source category in our February 7, 2019, proposed rule?
IV. What is included in this final rule based on results of the RTR?
A. What are the final rule amendments based on the residual risk review for the Coal- and Oil-Fired EGU source category?
B. What are the final rule amendments based on the technology review for the Coal- and Oil-Fired EGU source category?
C. What are the effective and compliance dates of the standards?
V. What is the rationale for our final decisions regarding the RTR action for the Coal- and Oil-Fired EGU source category?
A. Residual Risk Review for the Coal- and Oil-Fired EGU Source Category
B. Technology Review for the Coal- and Oil-Fired EGU Source Category
VI. Summary of Cost, Environmental, and Economic Impacts and Additional Analyses Conducted
A. What are the affected facilities?
B. What are the air quality impacts?
C. What are the cost impacts?
D. What are the economic impacts?
E. What are the benefits?
F. What analysis of environmental justice did we conduct?
G. What analysis of children's environmental health did we conduct?
VII. Statutory and Executive Order Reviews
A. Executive Orders 12866: Regulatory Planning and Review and Executive Order 13563: Improving Regulation and Regulatory Review
B. Executive Order 13771: Reducing Regulation and Controlling Regulatory Costs
C. Paperwork Reduction Act (PRA)
D. Regulatory Flexibility Act (RFA)
E. Unfunded Mandates Reform Act (UMRA)
F. Executive Order 13132: Federalism
G. Executive Order 13175: Consultation and Coordination With Indian Tribal Governments
H. Executive Order 13045: Protection of Children From Environmental Health Risks and Safety Risks
I. Executive Order 13211: Actions Concerning Regulations That Significantly Affect Energy Supply, Distribution, or Use
J. National Technology Transfer and Advancement Act (NTTAA)
K. Executive Order 12898: Federal Actions To Address Environmental Justice in Minority Populations and Low-Income Populations
L. Congressional Review Act (CRA)

I. General Information

A. Do these actions apply to me?

Regulated entities. Categories and entities potentially regulated by these final actions are shown in Table 1 of this preamble.

TABLE 1—NESHAP AND INDUSTRIAL SOURCE CATEGORIES AFFECTED BY THESE FINAL ACTIONS

NESHAP and source category	NAICS [1] code
Coal- and Oil-Fired EGUs	221112, 221122, 921150.

[1] North American Industry Classification System.

Table 1 of this preamble is not intended to be exhaustive, but rather to provide a guide for readers regarding entities likely to be affected by these final actions for the source category listed. To determine whether your facility is affected, you should examine the applicability criteria in the appropriate NESHAP. If you have any questions regarding the applicability of any aspect of this NESHAP, please contact the appropriate person listed in the preceding **FOR FURTHER INFORMATION CONTACT** section of this preamble.

B. Where can I get a copy of this document and other related information?

In addition to being available in the docket, an electronic copy of this document will also be available on the internet. Following signature by the EPA Administrator, the EPA will post a copy of this document at: *https://www.epa.gov/mats/regulatory-actions-final-mercury-and-air-toxics-standards-mats-power-plants.* Following publication in the **Federal Register**, the EPA will post the **Federal Register** version and key technical documents at this same website.

Additional information regarding the RTR action is available on the RTR website at *https://www3.epa.gov/ttn/atw/rrisk/rtrpg.html.* This information includes an overview of the RTR program, links to project websites for the RTR source categories, and detailed emissions and other data we used as inputs to the risk assessments.

C. Judicial Review and Administrative Reconsideration

Under CAA section 307(b)(1), judicial review of these final actions is available only by filing a petition for review in the United States Court of Appeals for the District of Columbia Circuit (D.C. Circuit) by July 21, 2020. Under CAA section 307(b)(2), the requirements established by this final rule may not be challenged separately in any civil or criminal proceedings brought by the EPA to enforce the requirements.

Section 307(d)(7)(B) of the CAA further provides that only an objection to a rule or procedure which was raised with reasonable specificity during the period for public comment (including any public hearing) may be raised

[2] The EPA took final action on the other aspect of the 2019 Proposal (*i.e.,* solicitation of comment on establishing a subcategory of certain existing EGUs firing eastern bituminous coal refuse for emissions of acid gas HAP) on April 15, 2020, in a separate action (85 FR 20838).

during judicial review. That section of the CAA also provides a mechanism for the EPA to reconsider the rule if the person raising an objection can demonstrate to the Administrator that it was impracticable to raise such objection within the period for public comment or if the grounds for such objection arose after the period for public comment (but within the time specified for judicial review) and if such objection is of central relevance to the outcome of the rule. Any person seeking to make such a demonstration should submit a Petition for Reconsideration to the Office of the Administrator, U.S. EPA, Room 3000, WJC South Building, 1200 Pennsylvania Ave. NW, Washington, DC 20460, with a copy to both the person(s) listed in the preceding **FOR FURTHER INFORMATION CONTACT** section, and the Associate General Counsel for the Air and Radiation Law Office, Office of General Counsel (Mail Code 2344A), U.S. EPA, 1200 Pennsylvania Ave. NW, Washington, DC 20460.

II. Appropriate and Necessary Finding

A. Overview

On June 29, 2015, the U.S. Supreme Court ruled in *Michigan* v. *EPA* that the Agency had erred when it failed to take cost into account in its previous CAA section 112(n)(1)(A) determination that it is appropriate and necessary to regulate HAP emissions from coal- and oil-fired EGUs. In response to that decision, the EPA finalized a supplemental finding on April 25, 2016, that evaluated cost considerations and concluded that the appropriate and necessary finding was still valid. 81 FR 24420 (2016 Supplemental Finding). On February 7, 2019, the EPA proposed a revised response to the U.S. Supreme Court decision. 84 FR 2670 (2019 Proposal). In the 2019 Proposal, after primarily comparing the cost of compliance relative to the benefits of HAP emission reduction from regulation, the EPA proposed to find that it is not appropriate and necessary to regulate HAP emissions from coal- and oil-fired EGUs, thereby reversing the Agency's conclusion under CAA section 112(n)(1)(A), first made in 2000 and later affirmed in 2012 and 2016. Specifically, the Agency proposed that the 2016 Supplemental Finding considering the cost of MATS was flawed as it did not satisfy the EPA's obligation under CAA section 112(n)(1)(A), as interpreted by the U.S. Supreme Court in *Michigan.* Additionally, the EPA proposed that while finalizing the action would reverse the 2016 Supplemental Finding, it would not remove the Coal- and Oil-Fired EGU source category from the CAA section 112(c)(1) list, nor would it affect the existing CAA section 112(d) emissions standards regulating HAP emissions from coal- and oil-fired EGUs that were promulgated on February 16, 2012. 77 FR 9304 (2012 MATS Final Rule).

In section II.B of this preamble, which finalizes the reversal of the 2016 Supplemental Finding, the EPA provides background information regarding the previous appropriate and necessary findings, including the affirmations in the preamble of the 2012 MATS Final Rule and in the 2016 Supplemental Finding. Section II.C of this preamble describes why the 2016 Supplemental Finding was flawed, why the EPA has authority to revisit that finding now, and what the EPA is finalizing as the appropriate approach to satisfy the EPA's obligation under CAA section 112(n)(1)(A) as interpreted by the U.S. Supreme Court in *Michigan.* Finally, section II.D of this preamble explains that the EPA's revised determination that regulation of HAP emissions from EGUs under CAA section 112 is not appropriate and necessary will not remove coal- and oil-fired EGUs from the CAA section 112(c) list of source categories, and that the previously established CAA section 112(d) standards for HAP emissions from coal- and oil-fired EGUs will remain in place. In this preamble, the EPA provides a summary of certain significant comments received on the 2019 Proposal and the Agency's response to those comments. The RTC document for this action summarizes and responds to all other significant comments that the EPA received.

B. Background

The CAA establishes a multi-step process for the EPA to regulate HAP emissions from EGUs. First, section 112(n)(1)(A) of the CAA requires the EPA to perform a study of the hazards to public health reasonably anticipated to occur as a result of HAP emissions from EGUs ''after imposition of the requirements of this chapter.'' [3] If, after considering the results of this study, the EPA determines that it is ''appropriate and necessary'' to regulate EGUs under CAA section 112, the EPA shall then do so.

The required study, which the EPA completed in 1998, contained an analysis of HAP emissions from EGUs, an assessment of the hazards and risks due to inhalation exposures to these emitted pollutants, and a multipathway (inhalation plus non-inhalation exposures) risk assessment for mercury and a subset of other relevant HAP.[4] The study indicated that mercury was the HAP of greatest concern to public health from coal- and oil-fired EGUs. Mercury is highly toxic, persistent, and bioaccumulates in food chains. The study also concluded that numerous control strategies, of varying cost and efficiency, were available to reduce HAP emissions from this source category. Based on this study and other available information, the EPA determined in December 2000, pursuant to CAA section 112(n)(1)(A), that it was appropriate and necessary to regulate coal- and oil-fired EGUs under CAA section 112 and added such units to the CAA section 112(c) list of sources that must be regulated under CAA section 112(d). 65 FR 79825 (December 20, 2000) (2000 Finding).[5] The 2000 Finding did not consider the cost of regulating EGUs in its finding that it was appropriate and necessary to do so. *Id.* at 79830.

In 2005, the EPA revised the original 2000 Finding and concluded that it was neither appropriate nor necessary to regulate EGUs under CAA section 112. 70 FR 15994 (March 29, 2005) (2005 Revision). This action was taken because, at that time, the EPA concluded that the original 2000 Finding lacked foundation in that it failed to consider: (1) The HAP reductions that could be obtained through implementation of CAA sections 110 and 111; and (2) whether hazards to public health would still exist after imposition of emission reduction rules under those sections. The 2005 Revision also removed coal- and oil-fired EGUs from the CAA section 112(c) list of source categories to be regulated under CAA section 112. In a separate but related 2005 action, the EPA also promulgated the Clean Air Mercury Rule (CAMR) which established CAA section 111 standards of performance for mercury emissions from EGUs. 70 FR 28605 (May 18, 2005).

[3] *See* CAA section 112(n)(1)(A); *see* also *Michigan* v. *EPA,* 135 S. Ct. at 2705 (''Quite apart from the hazardous-air-pollutants program, the Clean Air Act Amendments of 1990 subjected power plants to various regulatory requirements. The parties agree that these requirements were expected to have the collateral effect of reducing power plants' emissions of hazardous air pollutants, although the extent of the reduction was unclear.'').

[4] U.S. EPA. 1998. *Study of Hazardous Air Pollutant Emissions from Electric Utility Steam Generating Units—Final Report to Congress, Volume 1.* EPA–453/R–98–004a.

[5] In the same 2000 action, the EPA Administrator found that regulation of HAP emissions from natural gas-fired EGUs is not appropriate or necessary. 65 FR 79826.

Both the 2005 Revision and the CAMR were vacated by the D.C. Circuit in 2008. The Court held that the EPA had failed to comply with the requirements of CAA section 112(c)(9) for delisting source categories, and consequently also vacated the CAA section 111 performance standards promulgated in CAMR, without addressing the merits of those standards. *New Jersey* v. *EPA,* 517 F.3d 574 (D.C. Cir. 2008).

In response to the *New Jersey* decision, the EPA conducted additional technical analyses, including peer-reviewed risk assessments on human health effects associated with mercury and non-mercury HAP emissions from EGUs, focusing on risks to the most exposed and sensitive individuals in the population. Those analyses found that mercury and non-mercury HAP emissions from EGUs remain a significant public health hazard and that EGUs were the largest U.S. anthropogenic source of mercury emissions to the atmosphere.[6] Based on these findings, in 2012, the EPA affirmed the original 2000 Finding that it is appropriate and necessary to regulate EGUs under CAA section 112. 77 FR 9304 (February 16, 2012).

In the same 2012 action, the EPA established a NESHAP, commonly called MATS, that required coal- and oil-fired EGUs to meet HAP emission standards reflecting the application of the maximum achievable control technology (MACT) for mercury and other air toxics. After MATS was promulgated, both the rule itself and many aspects of the EPA's appropriate and necessary finding were challenged in the D.C. Circuit. In *White Stallion Energy Center* v. *EPA,* the Court denied all challenges. 748 F.3d 1322 (D.C. Cir. 2014). One judge dissented, expressing the view that the EPA erred by refusing to consider cost in its ''appropriate and necessary'' determination. *Id.* at 1258–59 (Kavanaugh, J., dissenting).

The U.S. Supreme Court subsequently granted *certiorari,* directing the parties to address a single question posed by the Court itself: ''Whether the Environmental Protection Agency unreasonably refused to consider cost in determining whether it is appropriate to regulate hazardous air pollutants emitted by electric utilities.'' *Michigan* v. *EPA,* 135 S. Ct. 702 (Mem.) (2014). In 2015, the U.S. Supreme Court held that ''EPA interpreted [CAA section 112(n)(1)(A)] unreasonably when it deemed cost irrelevant to the decision to regulate power plants.'' *Michigan* v. *EPA,* 135 S. Ct. 2699, 2712 (2015). In so holding, the U.S. Supreme Court found that the EPA ''must consider cost—including, most importantly, cost of compliance—before deciding whether regulation is appropriate and necessary.'' *Id.* at 2711. It is ''up the Agency,'' the Court added, ''to decide (as always, within the limits of reasonable interpretation) how to account for cost.'' *Id.* The rule was ultimately remanded back to the EPA (without vacatur) to complete the required cost analysis. *White Stallion Energy Ctr.* v. *EPA,* No. 12–1100, ECF No. 1588459 (D.C. Cir. December 15, 2015).

In response to the U.S. Supreme Court's direction, the EPA in the 2016 Supplemental Finding promulgated two different approaches to incorporate cost into the appropriate and necessary finding. 81 FR 24420. The EPA's preferred approach (referred to as the ''cost reasonableness'' approach) compared the estimated cost of compliance in the regulatory impact analysis (RIA) for the 2012 MATS Final Rule (referred to here as 2011 RIA [7]) against several cost metrics relevant to the EGU sector (*e.g.,* historical annual revenues, annual capital expenditures, and impacts on retail electricity prices). The ''cost reasonableness'' approach did not compare costs to benefits. Under this approach, the EPA concluded that the power sector would be able to comply with the MATS requirements while maintaining its ability to generate, transmit, and distribute reliable electricity at reasonable cost to consumers. Using a totality-of-the-circumstances approach, the EPA weighed this analysis that the costs of the rule were reasonable along with its prior findings about the amount of HAP pollution coming from the Coal- and Oil-Fired EGU source category, the scientific studies and modeling assessing the risks to public health and the environment from domestic EGU HAP pollution, and information about the toxicity and persistence of HAP in the environment.

In a second, alternative, and independent approach (referred to as the ''cost benefit'' approach), the EPA considered the benefit-cost analysis in the RIA for the 2012 MATS Final Rule. In that analysis, the EPA estimated that the final MATS rule would yield total annual monetized benefits (in 2007 dollars) of between $37 billion to $90 billion using a 3-percent discount rate and $33 billion to $81 billion using a 7-percent discount rate, plus additional benefits that cannot be quantified, in comparison to the projected $9.6 billion in annual compliance costs. That analysis reflects that 99.9 percent of the total annual monetized benefits were attributable not to benefits from HAP reduction, but rather from benefits from co-reduction of non-HAP pollutants. In the 2016 Supplemental Finding, the EPA determined that both the preferred ''cost reasonableness'' approach and the alternative ''cost benefit'' approach supported the conclusion that regulation of HAP emissions from EGUs is appropriate and necessary.

Several state and industry groups petitioned for review of the 2016 Supplemental Finding in the D.C. Circuit. *Murray Energy Corp.* v. *EPA,* No. 16–1127 (D.C. Cir. filed April 25, 2016). In April 2017, the EPA moved the D.C. Circuit to continue oral argument and hold the case in abeyance in order to give the new Administration an opportunity to review the 2016 action. (As further explained below, as of the date of signature, the case remains pending in the D.C. Circuit.) Accordingly, the EPA reviewed the 2016 action and proposed on February 7, 2019, to correct flaws in the prior response to *Michigan* v. *EPA* (84 FR 2670). Specifically, the 2019 Proposal proposed to reverse the 2016 action and to conclude that it is not ''appropriate and necessary'' to regulate HAP emissions from coal- and oil-fired EGUs. The public comment period for the 2019 Proposal ended on April 17, 2019. The remainder of this section of this preamble responds to significant comments received on the appropriate and necessary finding and describes the EPA's justification for finalizing this reversal of the 2016 Supplemental Finding.

C. EPA's Finding Under CAA Section 112(n)(1)(A)

1. EPA Has the Statutory Authority To Revisit the Appropriate and Necessary Finding

a. Summary of 2019 Proposal

Section 112(n)(1)(A) of the CAA directs the Administrator of the EPA to determine whether it is ''appropriate and necessary'' to regulate HAP emissions from fossil fuel-fired EGUs after conducting a study of the hazards to public health reasonably anticipated to occur as a result of emissions of HAP

[6] U.S. EPA. 2011. *Revised Technical Support Document: National-Scale Assessment of Mercury Risk to Populations with High Consumption of Self-caught Freshwater Fish in Support of the Appropriate and Necessary Finding for Coal- and Oil-Fired Electric Generating Units.* Office of Air Quality Planning and Standards. December. EPA–452/R–11–009. Docket ID Item No. EPA–HQ–OAR–2009–0234–19913.

[7] U.S. EPA. 2011. *Regulatory Impact Analysis for the Final Mercury and Air Toxics Standards.* EPA–452/R–11–011. Available at: *https://www3.epa.gov/ttn/ecas/docs/ria/utilities_ria_final-mats_2011-12.pdf.*

from EGUs after imposition of emission controls imposed under other provisions of the CAA. In *Michigan* v. *EPA,* the U.S. Supreme Court instructed the Agency that it was required to consider cost as part of its appropriate and necessary determination. The Agency completed a consideration of the cost to regulate HAP emissions from coal- and oil-fired EGUs in the 2016 Supplemental Finding. The EPA's 2019 action proposed to revisit the 2016 Supplemental Finding's consideration of cost, on the basis that the 2016 action is flawed. The 2019 Proposal stated that such reexamination was permissible as a basic principle of administrative law and under the CAA. 84 FR 2674 n.3.

b. Final Rule

The EPA is finalizing this action as proposed in February 2019 on the basis that the CAA and CAA section 112(n)(1)(A) do not prohibit the Administrator from revisiting a prior finding made under that section.

c. Comments and Responses

Comment: Some commenters asserted that it is unlawful for the EPA to revisit its 2016 Supplemental Finding at all, because the EPA has completed the analytic process Congress set in motion in 1990, and the statute unambiguously prohibits the EPA from revisiting or revising the CAA section 112(n)(1)(A) finding. Commenters asserted that the legislative history, statutory context, and statutory structure support their position that Congress intended the CAA section 112(n)(1)(A) appropriate and necessary finding to be a one-time decision, and that the provision gives the EPA ''limited discretion to activate a one-way switch to 'turn on' regulation of power plants.'' The commenters argued that ''[o]nce EPA turns on that switch, as it did in its 2000 finding . . . it must regulate power plants under section 112.''

Moreover, those commenters argued that even if CAA section 112 were ambiguous as to the EPA's authority to revisit the appropriate and necessary finding, the EPA was still bound to follow CAA section 112(c)(9)'s delisting procedure before it could reverse its finding under CAA section 112(n)(1)(A). The commenters claimed that *New Jersey* confirms that the EPA lacks inherent authority to reconsider the appropriate and necessary finding.

Finally, the commenters claimed that it would be ''illogical'' for the EPA to have authority to revise the appropriate and necessary finding independent of removing power plants from the list of regulated sources under CAA section 112. Commenters argued that a revised finding that has no regulatory effect would be ''inherently irrational,'' and that the EPA has failed to articulate a reasoned basis for undertaking this action (citing *Air Alliance Houston* v. *EPA,* 906 F.3d 1049 (D.C. Cir. 2018), and asserting that in that decision the D.C. Circuit found an EPA rule irrational where the EPA tried to ''have it both ways'' by claiming that a rule was necessary to prevent harms to regulated industry but also ''does nothing more than maintain the status quo,'' *Id.* at 1068).

Other commenters said that the EPA has authority to reconsider prior Agency decisions and the 2016 Supplemental Finding in particular. These commenters noted that if the 2016 Supplemental Finding were left unamended, it would establish policy precedents at odds with well-established precepts about how benefits and costs should be considered in regulatory decisions.

Response: The EPA disagrees with commenters that CAA section 112(n)(1)(A) speaks to the EPA's authority to revisit its appropriate and necessary finding, and we, therefore, disagree with commenters' contention that the statute on its face prohibits the EPA from revisiting a determination made under that provision. The provision reads: ''The Administrator shall regulate electric utility steam generating units under this section, if the Administrator finds such regulation is appropriate and necessary after considering the results of the study required by this subparagraph [the ''Utility Study'' [8]].'' The only clear requirement with regard to timing or sequence found in the text of the provision is that the Administrator may not make the finding prior to considering the results of the Utility Study, which the EPA completed in 1998. The statute does not restrict the Administrator's ability to revise or reconsider a prior finding made under CAA section 112(n)(1)(A).

We also disagree with commenters' argument that because other statutory provisions in the CAA mandate that the EPA review and revise regulations on a set schedule or continuing basis, it must follow that every other statutory provision lacking such a review-and-revise clause prohibits an agency from rethinking its interpretation of such provision. The EPA's CAA rulemaking history contains many examples of the Agency's changing position on a previous interpretation of a provision, even where there is no explicit directive within the provision to review or revise.

Absent a specific statutory prohibition, the EPA's ability to revisit existing decisions is well established. The EPA has inherent authority to reconsider and/or revise past decisions to the extent permitted by law so long as the Agency provides a reasoned explanation. The authority to reconsider exists in part because the EPA's interpretations of statutes it administers ''[are not] instantly carved in stone,'' but must be evaluated ''on a continuing basis.'' *Chevron U.S.A.* v. *Natural Resources Defense Council,* 467 U.S. 837, 863–64. This is true when, as is the case here, review is undertaken partly ''in response to . . . a change in administrations.'' *National Cable & Telecommunications Ass'n* v. *Brand X internet Services,* 545 U.S. 967, 981 (2005). Indeed, ''[a]gencies obviously have broad discretion to reconsider a regulation at any time.'' *Clean Air Council* v. *Pruitt,* 862 F.3d 1, 8–9 (D.C. Cir. 2017).

Commenters' assertions that the statutory context and structure of CAA section 112 and the legislative history of that provision support their view that the EPA lacks authority to revisit its CAA section 112(n)(1)(A) determination are marred by the commenters' assumed premise that the EPA necessarily would find that it *is* appropriate and necessary to regulate EGUs. The commenters argue that their interpretation of the statute must be correct because it creates a tidy framework: The EPA makes an affirmative appropriate and necessary finding, regulations under CAA section 112 are promulgated, and the *only* statutory means by which the appropriate and necessary finding could be revisited is to satisfy the delisting criteria under CAA section 112(c)(9). According to commenters, such a framework fits with Congress' concerns about dangers to public health and welfare due to air pollution and what they broadly characterize as congressional desire to regulate HAP from power plants ''promptly.'' The problem with the commenters' statutory interpretation is that it makes sense only if an affirmative appropriate and necessary finding occurs in the first instance. If, as commenters assert, CAA section 112(c)(9) is the *only* statutory means by which a finding under CAA section 112(n)(1)(A) may be revisited, commenters' framework provides no pathway by which the EPA could revisit

[8] CAA section 112(n)(1)(A) directs the EPA to conduct a study to evaluate the hazards to public health reasonably anticipated to occur as the result of HAP emissions from EGUs after the imposition of the requirements of the CAA, and to report the results of such study to Congress by November 15, 1993. *See* U.S. EPA, *Study of Hazardous Air Pollutant Emissions from Electric Utility Steam Generating Units—Final Report to Congress.* EPA–453/R–98–004a, February 1998.

a finding that it is *not* appropriate and necessary to regulate HAP from power plants. Commenters' ''unambiguous'' reading of CAA section 112(n)(1)(A) and its assumption that Congress drafted the provision in order to ensure ''prompt'' reductions of HAP from EGUs treats an affirmative finding under that section as a foregone conclusion rather than a decision left up to the expertise of the Agency and its Administrator.

The commenters' reading of the statute also cannot be squared with the *Michigan* v. *EPA* decision. They assert that CAA section 112(n)(1)(A) only allows the EPA ''to activate a one-way switch to 'turn on' regulation,'' and notes that the Agency did so ''in its 2000 finding.'' Commenters are essentially arguing that the U.S. Supreme Court's instruction to the EPA that it was required to consider cost as part of a CAA section 112(n)(1)(A) finding could *never* have had any practical effect, because according to commenters, the ''only . . . statutorily mandated avenue to turn the switch off and reverse course . . . [is] the section 112(c)(9) procedures.'' Therefore, in petitioners' view, regardless of what the EPA determined on remand from *Michigan,* only the satisfaction of the CAA section 112(c)(9) criteria, which contain no consideration of cost, could have altered the EPA's finding under CAA section 112(n)(1)(A). We do not agree that this is a reasonable reading of the statute or the *Michigan* decision.

Additionally, the EPA notes that the D.C. Circuit in *New Jersey* held that the EPA's reversal of a prior determination that it was appropriate and necessary to regulate EGUs under CAA section 112 did not by itself effect a delisting of EGUs from the CAA section 112(c) list of source categories. This holding recognizes that the CAA section 112 appropriate and necessary determination is structurally and functionally separate from the EPA's ability, conditioned on certain predicate findings, to remove source categories from the CAA section 112(c) list. Commenters are, therefore, wrong to assert that the EPA can reverse an appropriate and necessary determination under CAA section 112(n)(1)(A) only if it has first undertaken CAA section 112(c)(9)'s delisting procedure, and wrong to assert that *New Jersey* supports their position that the EPA lacks inherent authority to reconsider the appropriate and necessary finding; in fact, that case supports the opposite position.

For similar reasons, we also reject the commenters' contention that CAA section 112(c)(9)'s health protective criteria are substantively incorporated into CAA section 112(n)(1)(A)'s appropriate and necessary determination, such that a failure to consider those criteria in the context of reversing a determination under CAA section 112(n)(1)(A) is arbitrary and renders CAA section 112(c)(9) a nullity. As explained in section II.D of this preamble, we agree that the EPA may not delist EGUs from the CAA section 112(c) list and revoke MACT standards for power plants without meeting the delisting criteria of CAA section 112(c)(9). We do not agree, however, that the delisting provision has any effect on the Agency's ability to make an affirmative or negative determination under CAA section 112(n)(1)(A) where we are not purporting to alter the CAA section 112(c) list. In particular, we do not agree with the commenters' reading of *New Jersey* that the D.C. Circuit's holding means that the EPA could reverse an affirmative appropriate and necessary finding only if it found that the CAA section 112(c)(9) delisting criteria were met. The Court's holding in *New Jersey* plainly states that CAA section 112(c)(9) ''unambiguously limit[s] EPA's discretion to remove sources, including EGUs, from the section 112(c)(1) list once they have been added to it.'' 517 F.3d 574, 583 (D.C. Cir. 2008). Commenters' presumed incorporation of the statutory delisting criteria into the CAA section 112(n)(1)(A) determination also finds no support in the *Michigan* decision, which said nothing about the EPA's obligation to consider those criteria in determining whether regulation of power plants is appropriate and necessary.

Finally, we disagree with commenters who assert that this final action is ''inherently irrational'' because the MATS standards would not be reversed as a result of the negative appropriate and necessary finding, due to controlling legal precedent from the D.C. Circuit (*New Jersey*). In this action the EPA is setting out the Agency's revised reasoning to respond to a U.S. Supreme Court decision and remand (*Michigan*), because the EPA concludes that the 2016 Supplemental Finding is not appropriate as a matter of interpretation of the statute or as a matter of policy. As noted by some of the commenters, leaving in place the incorrect interpretation of ''appropriate'' in CAA section 112(n)(1)(A) could establish policy precedent that could have ''long-term and harmful consequences.''

Moreover, the EPA disagrees that *Air Alliance Houston* v. *EPA* has any bearing on this action. There, in admonishing the Agency that it could not ''have it both ways,'' the Court was criticizing the EPA for attempting to characterize its rule as relieving ''substantial compliance and implementation burden'' while also ''maintaining the status quo'' (such that the rule would have little effect on compliance requirements). *See Air Alliance Houston,* 906 F.3d at 1068. Here, the Agency believes a different finding and better response to the U.S. Supreme Court's decision in *Michigan* v. *EPA* is warranted given the proper application of that decision and the facts in the EPA's record. We acknowledge that this change in policy will not affect the CAA section 112 MACT standards for EGUs because the D.C. Circuit's decision in *New Jersey* v. *EPA* prohibits the Agency from removing listed sources from the CAA section 112(c) list without satisfying the CAA section 112(c)(9) delisting criteria (*see* section II.D of this preamble). But we do not agree that simply because D.C. Circuit precedent establishes that the Agency's reversing its prior determination will have a particular regulatory consequence, the Agency is, therefore, prohibited from revisiting that prior determination in the first instance.

Comment: Some commenters stated that the EPA has no authority to ''revise'' its response to the U.S. Supreme Court's decision in *Michigan,* and its attempt to do so would impermissibly subvert the judicial review process. These commenters argued that the EPA's response to *Michigan* is the 2016 Supplemental Finding, and that at this stage, that response cannot be altered or reversed. The commenters contended that the 2016 Supplemental Finding constitutes final Agency action and noted that the Finding is currently subject to petitions for review in the D.C. Circuit. The commenters suggested that seeking to undo the 2016 Supplemental Finding by administrative action would unlawfully circumvent that review. Other commenters asserted that the EPA has an obligation to explain how final action on the 2019 Proposal could impact the government's position in ongoing litigation of the 2016 Supplemental Finding. Commenters also said the EPA must address the implications of a reversal of that finding, considering the petitioner's positions in the ongoing litigation where the petitioner has argued that reversal of the appropriate and necessary finding must be followed by vacatur of MATS.

Response: The EPA disagrees with the commenters that finalizing this action ''subverts the judicial review process'' with respect to the 2016 Supplemental Finding. To the extent that commenters are arguing that the EPA lacks statutory

authority to review the 2016 Supplemental Finding, the EPA has addressed that contention in the response to the comment above. We agree that the 2016 Supplemental Finding constituted final Agency action, and we acknowledge that petitions for review of that action were filed in the D.C. Circuit in *Murray Energy Corp.* v. *EPA,* No. 16–1127 (and consolidated cases) (D.C. Cir. filed April 25, 2016). However, we disagree that our final action unlawfully circumvents the judicial process. The EPA filed a motion in the *Murray Energy* litigation requesting the Court to continue oral argument, which had been scheduled for May 18, 2017, to allow the new Administration adequate time to review the 2016 Supplemental Finding to determine whether it needed to be reconsidered.[9] On April 27, 2017, in consideration of the EPA's motion, the D.C. Circuit ordered that the consolidated challenges to the 2016 Supplemental Finding be held in abeyance.[10] That case continues to be held in abeyance, pending further order of the Court. In its order, the Court directed the parties to file motions to govern future proceedings within 30 days of the Agency's concluding its review of the 2016 Supplemental Finding.[11]

The EPA disagrees with the commenters that the Agency has an obligation to address in the context of this regulatory action the government's position in that ongoing litigation. We address in section II.D of this preamble the implications of the reversal of the 2016 Supplemental Finding, including addressing those comments received that argue that a vacatur of MATS is required upon finalization of this action. To the extent that the commenter is suggesting that it would be appropriate or required for the EPA at this point to address potential *future* arguments petitioners might make in the *Murray Energy* litigation following this final action, the Agency disagrees. The appropriate venue for addressing such arguments is the judicial review process for that action. Commenters provide no authority to support their assertion that an agency is obliged to discuss in a rulemaking the implications of that rulemaking for pending litigation challenging a previous, related agency action; the EPA is aware of no such authority; and the EPA declines to take such litigation positions in this final action.

2. The Preferred Cost Reasonableness Approach of the 2016 Supplemental Finding Was Deficient

a. Summary of 2019 Proposal

The EPA proposed to determine that the Agency's 2016 Supplemental Finding erred in its consideration of cost. Specifically, we proposed to find that what was described in the 2016 Supplemental Finding as the preferred approach, or the ''cost reasonableness test,'' does not meet the statute's requirements to fully consider costs and was an unreasonable interpretation of CAA section 112(n)(1)(A)'s mandate, as informed by the U.S. Supreme Court's opinion in *Michigan.* A summary of that approach can be found in the 2019 Proposal. 84 FR 2674–75.

b. Final Rule

After considering comments submitted in response to the EPA's 2019 Proposal, the EPA is finalizing the proposed approach. The EPA concludes that the ''preferred approach'' in the 2016 Supplemental Finding did not meaningfully consider cost, which the *Michigan* Court observed to be a ''centrally relevant factor'' in making the CAA section 112(n)(1)(A) appropriate and necessary finding. The 2016 Supplemental Finding's de-emphasis of the importance of the cost consideration in the appropriate and necessary determination was based on an impermissible attempt to ''harmonize'' CAA section 112(n)(1)(A) with the remainder of CAA section 112,[12] and was not consistent with Congress' intent and the U.S. Supreme Court's decision in *Michigan* v. *EPA,* given that statutory provision's directive to treat EGUs differently from other sources. *See* 135 S. Ct. at 2710 (''The Agency claims that it is reasonable to interpret [CAA section 112(n)(1)(A)] in a way that 'harmonizes' the program's treatment of power plants with its treatment of other sources. This line of reasoning overlooks the whole point of having a separate provision about power plants: Treating power plants *differently* from other sources.'') (emphasis in original).

c. Comments and Responses

Comment: Some commenters asserted that the cost analysis in the 2016 Supplemental Finding was consistent with longstanding cost-effectiveness methodologies used in other CAA programs, such as the CAA section 111 New Source Performance Standards and CAA section 169 Prevention of Significant Deterioration (PSD). These commenters disagreed with what they characterized as the 2019 Proposal's position that CAA section 111 case law was irrelevant to the CAA section 112(n)(1)(A) appropriate and necessary determination, noting that cost effectiveness is used in CAA section 111 to determine standards for existing sources, much as the EPA is determining whether to regulate existing sources in CAA section 112(n)(1)(A). These commenters further said that the proposed monetized cost-benefit approach is inferior to the longstanding cost-effectiveness test for addressing concerns about standards that impose costs too high for the industry to bear. However, other commenters agreed with the EPA that cases interpreting section 111 of the CAA were not an appropriate guide to considering costs under CAA section 112(n)(1)(A).

Response: The broad language of CAA section 112(n)(1)(A) and the holding of the *Michigan* Court suggest that there is more than one permissible way to interpret the Agency's obligation to consider cost in the appropriate and necessary finding. The text of that section does not require the Agency to consider cost in a particular fashion. The U.S. Supreme Court, in identifying that the Agency's obligation to consider cost in *some* fashion in light of the broad term ''appropriate,'' recognized the discretion afforded the Administrator, noting, ''[i]t will be up the Agency to decide (as always, within the limits of reasonable interpretation) how to account for cost.'' 135 S. Ct. at 2711. Even in the final 2016 Supplemental Finding, the EPA acknowledged that the cost reasonableness test was but one way to interpret its CAA section 112(n)(1)(A) obligation to consider cost, and ''that the agency need not demonstrate that [its] decision is the same decision that would be made by another Administrator or a reviewing court.'' 81 FR 24431. The commenters provide many reasons for why they preferred the EPA's ''cost reasonableness'' test, but even they do not attempt to argue that the EPA's 2016 ''preferred approach'' is

[9] Respondent EPA's Motion to Continue Oral Argument at 6, *Murray Energy Corp.* v. *EPA,* No. 16–1127 (D.C. Cir. April 18, 2017), ECF No. 1671687.

[10] Order, *Murray Energy Corp.* v. *EPA,* No. 16–1127 (D.C. Cir. April 27, 2017), ECF No. 1672987.

[11] *Id.*

[12] *See Legal Memorandum Accompanying the Proposed Supplemental Finding that it is Appropriate and Necessary to Regulate Hazardous Air Pollutants from Coal- and Oil-Fired Electric Utility Steam Generating Units (EGUs)* (2015 Legal Memorandum) (Docket ID Item No. EPA–HQ–OAR–2009–0234–20519), at 6–15 (describing statutory purpose of 1990 CAA Amendments and CAA section 112, and concluding that ''while cost is certainly an important factor, it is one of several factors that must be considered and section 112(n)(1) does not support a conclusion that cost should be the predominant or overriding factor.'').

the *only* permissible interpretation of the statute.

Comparisons of a regulation's costs and the relationship of those costs to the benefits the regulation is expected to accrue are a traditional and commonplace way to assess the costs of a regulation and are a permissible way to comply with Congress' broad directive to the Administrator to determine whether regulation is ''appropriate'' in CAA section 112(n)(1)(A). The EPA has never taken the position, nor do commenters argue now, that *any* comparison of costs to benefits would be an impermissible reading of the Agency's obligation to consider cost in CAA section 112(n)(1)(A); indeed, the Agency's alternative approach to considering cost in the 2016 Supplemental Finding was a formal cost-benefit analysis based on its 2011 RIA, and many of the commenters who now evince a preference for the 2016 ''cost reasonableness test'' at the time agreed that the 2011 RIA cost-benefit analysis could independently satisfy the Agency's obligation to consider cost under CAA section 112(n)(1)(A). U.S. Supreme Court precedent also supports the Agency's position that, absent an unambiguous prohibition to use cost-benefit analysis, the Agency generally may do so as a reasonable way to consider cost.[13] In *Entergy Corp.* v. *Riverkeeper, Inc.,* 556 U.S. 208 (2009), the U.S. Supreme Court struck down a Second Circuit decision prohibiting the EPA from employing benefit-cost analysis where the statute was silent as to how the Agency was to consider cost in adopting standards for cooling water intake standards for power plants. The Second Circuit found that because analogous provisions in the Clean Water Act explicitly instructed the EPA to consider ''the total cost of application of technology in relation to the effluent reduction benefits to be achieved,'' (33 U.S.C. 1314(b)(4)(B)), Congress' failure to include such an instruction to the EPA in the provision at issue in the case meant that the EPA was not permitted to compare compliance costs to expected environmental benefits. The U.S. Supreme Court reversed, holding that the EPA's use of cost-benefit analysis ''governs if it is a reasonable interpretation of the statute—not necessarily the only possible interpretation, nor even the interpretation deemed *most* reasonable by the courts.'' *Id.* at 218 (emphasis in original).

The EPA's choice to employ cost-effectiveness analyses, rather than cost-benefit comparisons, in the context of other statutory provisions such as CAA section 111 or the PSD program in no way binds the Agency to using that method to consider cost in CAA section 112(n)(1)(A). The EPA's citation in the 2015 Legal Memorandum of our consideration of cost under CAA section 111 and the case law evaluating those instances was only to provide context to explain the genesis of the EPA's newly minted ''cost reasonableness'' test in the 2016 Supplemental Finding. Even then the EPA did not take the position that the D.C. Circuit cases reviewing the Agency's cost considerations under CAA section 111 were binding precedent upon which the Court should review our action under CAA section 112(n)(1)(A). In short, the commenters' preference that the EPA consider cost in a different way does not preclude the Agency from instead considering cost using an approach that compares costs and benefits, where the statute's broad directive suggests that it may. *See Entergy,* 556 U.S. at 226.

Comment: Some commenters asserted that the EPA's proposed approach to considering costs and benefits is inconsistent with what they broadly characterize as congressional intent to err on the side of protecting public health. These commenters argued that Congress recognized the insufficiency of available methods for quantifying costs and benefits when revising CAA section 112 in 1990 and that Congress concluded that the nature and latency of harms posed by HAP are not given sufficient weight in a regulatory process that must balance long-term benefits against present-day costs. Commenters said that the Agency should not construe the *Michigan* Court's instruction to ''meaningfully consider cost'' as a requirement to consider benefits in a way that is inconsistent with Congress' determination that reductions in HAP emissions have great value to the public. These commenters added that the EPA's proposed approach is based on an incorrect interpretation of *Michigan,* which stated only that consideration of cost should play some role in the appropriate and necessary finding, not that cost considerations should dominate that finding. According to these commenters, the studies required in CAA section 112(n) indicate that Congress put public health and environmental concerns at the forefront of CAA section 112, which was enacted explicitly in response to the EPA's lack of action in addressing the harmful effects of HAP, and, therefore, shares the section's overall focus on harm prevention. These commenters asserted that the ''preferred approach'' in the 2016 Supplemental Finding met the requirements of *Michigan* and were consistent with congressional intent and the CAA's statutory goals.

Other commenters, however, agreed with the 2019 Proposal that the ''cost reasonableness'' test in the 2016 Supplemental Finding's ''preferred approach'' was invalid, harmful, and failed to meet the *Michigan* Court's expectation that the Agency should weigh benefits against costs. These commenters characterized the cost-reasonableness test, which compared costs of MATS compliance with various other costs incurred by the power sector, as an ''affordability test,'' or an inquiry into whether the power sector could absorb the costs of compliance. These commenters noted that such a test ignores benefits by failing to provide important information on whether society's investment in additional costs is worth the expected benefits and fails to consider whether costs would be ''prudently incurred'' as a means to reduce hazards to public health. As one commenter put it, ''Simply because the power sector *could* absorb costs without affecting current operational performance does not mean that it *should* absorb those costs.'' Some commenters objecting to the ''preferred approach'' in the 2016 Supplemental Finding emphasized that looking at cost in this manner would invite the promulgation of regulations that are poorly designed, with few potential benefits. They voiced concern that using affordability tests could result in agencies focusing public and private sector resources on extinguishing relatively small risks while leaving larger risks unattended. Other commenters noted that such tests also penalize successful industries due to their success, and risk failing to appropriately regulate industries that are less profitable.

Response: The EPA agrees with commenters who stated that Congress' intent with respect to CAA section 112, as a whole, evinces an acknowledgment of the seriousness of toxic air pollutants. We do not agree, however, that general congressional concern about the toxicity of HAP overrides the specific instruction given to the Administrator in CAA section 112(n)(1)(A) to make a determination about whether regulation of EGUs in particular is ''appropriate and necessary.'' As the U.S. Supreme Court admonished the EPA in *Michigan,* the text and structure of CAA section

[13] *See* S. Masur & Eric A. Posner, *Cost-Benefit Analysis and the Judicial Role,* 85 U. Chi. L. Rev. 935, 981 (2018).

112, and 112(n)(1)(A) in particular, evince Congressional design to approach the question whether to regulate EGUs *differently* than other source categories:

> Congress crafted narrow standards for EPA to apply when deciding whether to regulate other sources; in general, these standards concern the volume of pollution emitted by the source, [CAA section 112(c)(1)], and the threat posed by the source ''to human health or the environment,'' [citing CAA section 112(c)(3)]. But Congress wrote the provision before us [CAA section 112(n)(1)(A)] more expansively . . . That congressional election settles this case. [The Agency's] preference for symmetry cannot trump an asymmetrical statute.

135 S. Ct. at 2710 (internal citations omitted).

Moreover, we do not agree with commenters' suggestion that in the Agency's comparison of costs and benefits, the EPA is considering benefits in a way that is inconsistent with a congressional determination that reductions in HAP emissions have great value to the public and Congress' public health and environmental concerns. We disagree that CAA section 112's general concerns about public health and environmental risks from HAP emissions mandated a particular manner of valuing or weighing the benefits of reducing those risks.

As noted in the 2019 Proposal, we do not think the 2016 Supplemental Finding's analysis of cost satisfied the Agency's mandate under CAA section 112(n)(1)(A) and *Michigan.* The ''preferred approach'' in the 2016 Supplemental Finding considered cost insofar as the Agency at the time analyzed whether the utility industry as a whole could continue to operate, and found that it could (*i.e.,* that costs were ''reasonable''). 81 FR 24420, 24422, 24424, 24427, 24428, 24429, 24430, 24431. But we do not think the ''preferred approach'' in the 2016 Finding gave sufficient weight to cost as a ''centrally relevant factor,'' *Michigan,* 135 S. Ct. at 2707—that is, we do not think that a cost standard that is satisfied by establishing that regulation will not fundamentally impair the functioning of a major sector of the economy places cost at the center of a regulatory decision—and we are in this action heeding the *Michigan* Court's reading of the Administrator's role under CAA section 112(n)(1)(A), which directed the Agency to meaningfully consider cost within the context of a regulation's benefits. We agree that *Michigan* did not hold that the Agency is required to base its decision whether it is appropriate and necessary to regulate EGUs under CAA section 112 on a formal benefit-cost analysis, but neither did it hold that a comparison of costs and benefits is an impermissible approach to considering cost.

The U.S. Supreme Court contemplated that a proper consideration of cost would be relative to benefits, and the Court's decision contains many references comparing the two considerations. In establishing the facts of the case, the Court pointed out that ''EPA refused to consider whether the costs of its decision outweighed the benefits.'' 135 S. Ct. at 2706. The Court questioned whether a regulation could be considered ''rational'' where there was a gross imbalance between costs and benefits and stated that ''[n]o regulation is 'appropriate' if it does more harm than good.'' *Id.* at 2707. The Court also made numerous references to a direct comparison of the costs of MATS with benefits from reducing emissions of HAP. For instance, the Court pointed out that ''[t]he costs [of MATS] to power plants were thus between 1,600 and 2,400 times as great as the quantifiable benefits from reduced emissions of hazardous air pollutants.'' *Id.* at 2706. Although the Court's holding established no bright-line rules, the opinion as a whole, thus, repeatedly suggests that CAA section 112(n)(1)(A)'s requisite consideration of cost would not be met if the cost analysis did not ''prevent the imposition of costs far in excess of benefits.'' *Id.* at 2710.

The 2016 Supplemental Finding's ''test'' of whether an industry can bear the cost of regulation, and its subsequent conclusion that such costs are ''reasonable,'' does not satisfy the statute's mandate to determine whether such regulation is appropriate and necessary. We agree with commenters who stated that the metrics ''tested'' by the Agency in the 2016 Supplemental Finding are not an appropriate basis for the determination whether it is ''appropriate and necessary'' to impose that regulation. Each cost metric the Agency examined compared the cost of MATS to other costs borne by the industry, but never in its ''preferred approach'' did the Agency make the assessment of whether the benefits garnered by the rule were worth it—*i.e.,* a comparison of costs and benefits. Even if the EPA determined that cost of regulation was, viewed on its own terms, *unreasonable* after comparing the cost of regulation to other costs borne by the industry, the ''preferred approach'' could have still resulted in a finding that regulation was ''appropriate'' because the EPA placed so much weight on hazards to public health and the environment that needed to be prevented. *See* 81 FR at 24432. In other words, much as it did in 2012 when it read cost consideration entirely out of the CAA section 112(n)(1)(A) determination, the Agency in 2016 was fixated on the term ''necessary,'' without considering whether any countervailing factors, *i.e.,* cost, might call into question whether regulation was ''appropriate.'' As many commenters pointed out, the ''cost reasonableness test'' failed to consider cost relative to benefits, and really focused only on whether costs could be absorbed, rather than on whether they should be absorbed—the inquiry that is specifically required by the word ''appropriate.'' We, therefore, conclude that the ''cost reasonableness'' approach did not adequately address the U.S. Supreme Court's instruction that a reasonable regulation requires an agency to fully consider ''the advantages *and* the disadvantages'' of a decision. *See Michigan,* 135 S. Ct. at 2707 (emphasis in original).

Moreover, we take seriously commenters' concerns that leaving the ''preferred approach'' in place, with its ''cost reasonableness'' or affordability test, could have a harmful influence on other agencies interpreting similarly broad congressional directives to consider cost. Statutes that direct agencies to make determinations about whether regulation is ''appropriate'' are precisely the contexts in which those agencies should retain discretion to select and prioritize public policies which provide the most value for the public good in relation to the cost.

Comment: Commenters said that the EPA's proposed new approach to considering cost in the CAA section 112(n)(1)(A) finding is an impermissible interpretation of that provision because it fails to meaningfully address factors that are ''centrally relevant'' to the inquiry of whether it is appropriate and necessary to regulate HAP from EGUs. Some commenters noted that the Agency's alleged failure in the 2019 Proposal to adequately address these factors, upon which the 2016 Supplemental Finding was predicated, runs afoul of the Agency's obligation to provide a reasoned explanation for abandoning these considerations, citing *Motor Vehicle Mfrs. Ass'n of United States, Inc.* v. *State Farm Mut. Automobile Ins. Co.,* 463 U.S. 29 (1983) and *FCC* v. *Fox Television Stations, Inc.,* 556 U.S. 502 (2009). The commenters noted that these cases state the principle that agencies cannot simply ignore prior factual determinations but must provide a ''reasoned explanation'' for a proposed departure from ''facts and circumstances that underlay or were engendered by the

prior policy.'' These commenters specifically faulted the EPA for not giving appropriate weight to the following factors:

i. Unquantified Benefits

Commenters stated that the 2019 Proposal does not acknowledge that some ''hazards to public health'' are unquantified and asserted that the 2019 Proposal presents a significant change in position with insufficient justification for revising the EPA's longstanding interpretation that the phrase ''hazards to public health'' encompasses risks that have not been monetized because of the limitations of current methods, data, and uncertainty. Commenters said the 2019 Proposal gave no discernable weight to these risks as required by the statutory phrase ''hazards to public health reasonably anticipated to occur.''

Moreover, the commenters asserted that the monetized, HAP-specific benefits at issue, which quantify avoided IQ loss in children associated with prenatal methylmercury exposure from self-caught fish consumption among recreational anglers, are but a small fraction of the public health benefits attributable to reductions in mercury emissions alone. The commenters cited the statement from the EPA's Science Advisory Board (SAB), which stated that IQ loss ''is not the most potentially significant health effect associated with mercury exposure as other neurobehavioral effects, such as language, memory, attention, and other developmental indices, are more responsive to mercury exposure.'' 80 FR 75040. The commenters noted that none of the environmental benefits from reductions in mercury emissions could be quantified, nor any of the health or environmental benefits attributable to reductions in other HAP.

ii. Qualitative Benefits Such as Impacts on Tribal Culture and Practices

Some commenters stated that the EPA's proposed approach ignores non-monetizable benefits. These commenters asserted that methylmercury contamination threatens traditional American Indian lifeways, including longstanding traditions of fishing and fish consumption that are central to many tribes' cultural identity and that make individual tribes as distinct as different individual people. These commenters stated that for many tribes, fishing and fish consumption are critical social practices, handed down from generation to generation. Where tribal members no longer fish due to health concerns, these fishing traditions are not passed down to new generations of tribal members, leading to permanent cultural loss. Furthermore, these commenters stated that many tribes are connected to particular waters for cultural, spiritual, or other reasons (and others' fishing rights are limited to certain grounds by treaty), so tribal members cannot simply move their fishing to another location to avoid mercury contamination. The commenters asserted that the preferred approach of the 2016 Supplemental Finding recognized that regulation of HAP from EGUs would benefit American Indians by allowing them to safely engage in, and thereby perpetuate, their culture. These commenters argued that the Agency's preferred approach in the 2016 Supplemental Finding properly deemed these qualitative benefits to be cognizable and highly significant. In addition, the commenters stated that mercury emissions likewise cause significant harm to Indian subsistence and fishing economies, contaminating food sources that many tribal members depend on for survival. According to these commenters, the EPA's 2016 preferred approach methodology allowed for a full range of qualitative benefits to be accounted for, whereas the 2019 proposed reversal does not.

iii. Latency, Persistence in the Environment, and Toxicity of Regulated Pollutants

Some commenters asserted that the EPA's proposed approach disregarded the physiochemical nature and toxicity of the toxic air pollutants regulated by CAA section 112 and the concern Congress had expressed about these qualities in enacting that section. These commenters pointed out that, in enacting the list of regulated air toxics, Congress deliberately *withdrew* the EPA's authority to judge the importance of the harms threatened by the listed pollutants. The commenters noted that Congress itself listed the pollutants, rather than waiting for the EPA to do so, because of a difficulty which commenters argue is particular to air toxics: ''[t]he public health consequences of substances which express their toxic potential only after long periods of chronic exposure will not be given sufficient weight in the regulatory process when they must be balanced against the present-day costs of pollution control and its other economic consequences.'' Leg. Hist. at 8522 (S. Rep. No. 101–228 at 182). The commenters argued that these identified harms from air toxics occur regardless of the source of the pollutants, and, therefore, there is no reason to believe that Congress might have, by inserting CAA section 112(n)(1)(A), authorized the EPA to reassess the benefits of reducing those harms in the context of EGUs. The commenters stated that no study, including the EPA's Utility Study, suggests that HAP from EGUs are of any different character or pose less harm by their nature than HAP emitted by any other industrial source category.

iv. Distributional Impacts of the Pollutants on the Population

Commenters pointed to Congress' intent to address harms that are concentrated within particular communities or populations, citing CAA section 112(f)(2)(A)'s requirement that the EPA address lifetime excess cancer risks borne by the ''individual most exposed to emissions,'' CAA section 112(n)(1)(C)'s directive that the EPA consider power plant mercury harms to sensitive fish-consuming populations, and legislative history (''EPA is to consider individuals who are sensitive to a particular chemical'' in assessing whether a pollutant's harm warrants regulation) (Leg. Hist. at 8501). The commenters noted that the 2016 Supplemental Finding's preferred approach identified several populations that were disproportionately at risk of mercury exposure from EGUs, including African-Americans living below the poverty line in the Southeast who rely on the fish they catch for food, and the children and fetuses in those communities in particular whose risk of exposure is amplified; and individuals and communities who live near coal- and oil-fired power plants, who are disproportionately members of racial and ethnic minorities. The commenters cited a study that found that of the 8.1 million people living within 3 miles of a coal-fired plant in the year 2000, 39 percent were people of color, a percentage significantly higher than the proportion of people of color in the U.S. population as a whole. The same study found that people living within 3 miles of such power plants had an average annual per capita income of $18,596, significantly lower than the national average.

Some commenters pointed to various executive orders that independently direct the EPA to consider some of these factors, including Executive Order 12898 (February 11, 1994), which establishes that ''disproportionately high and adverse human health or environmental effects'' of EPA decisions ''on minority populations and low-income populations in the U.S. and its territories and possessions'' are of central concern to the EPA's decision-making, with specific emphasis upon ''subsistence consumption of fish and

wildlife.'' The commenters also pointed to Executive Order 13045 (April 21, 1997),[14] which is particularly concerned about ''environmental health risks'' that may ''disproportionately affect children.''

Response: Agency decisions, once made, are not forever ''carved in stone.'' *Nat'l Cable & Telecomms. Ass'n* v. *Brand X Internet Servs.,* 545 U.S. 967, 981 (2005) (internal quotation marks and citations omitted). We disagree with the commenters' view that the EPA is not permitted to determine that the ''cost reasonableness'' approach is not the correct way to consider cost in the CAA section 112(n)(1)(A) appropriate and necessary finding, and their view that the EPA is not permitted to re-evaluate the significance of the factual findings underpinning its 2016 Supplemental Finding and come to a different conclusion. D.C. Circuit and U.S. Supreme Court precedent, including those cases cited by the commenters, support the Agency's position that it is within its authority to do so, provided that the Agency's new action is based on a permissible interpretation of the statute and is supported by a reasoned explanation.

In *FCC* v. *Fox,* the U.S. Supreme Court stated an agency's obligation with respect to changing a prior policy quite plainly:

> We find no basis . . . for a requirement that all agency change be subjected to more searching review. The [Administrative Procedure] Act mentions no such heightened standard. And our opinion in *State Farm* neither held nor implied that every agency action representing a policy change must be justified by reasons more substantial than those required to adopt a policy in the first instance.[15]

In cases where an agency is changing its position, the Court stated that a reasoned explanation for the new policy would ordinarily ''display awareness that it is changing position'' and ''show that there are good reasons for the new policy.'' *Id.* at 515. However, the Court held that the agency ''need not demonstrate . . . that the reasons for the new policy are better than the reasons for the old one; it suffices that the new policy is permissible under the statute, that there are good reasons for it, and that the agency *believes* it to be better.'' *Id.* In cases where a new policy ''rests upon factual findings that contradict those which underlay its prior policy; or when its prior policy has engendered serious reliance interests that must be taken into account,'' the Court found that a more detailed justification might be warranted than what would suffice for a new policy.

Although commenters assert that the EPA has failed to provide a reasoned basis for its action here, their real complaint with the Agency's abandonment of the 2016 Supplemental Finding's ''cost reasonableness test'' and ''preferred approach'' is that they favored the way the Agency under that approach weighed certain factors, including unquantified benefits, impacts on tribes and tribal culture, the latency and persistence of air toxics in the environment, and distributional concerns and impacts. That the EPA now weighs these concerns differently—a weighing that is further explained below—does not mean the Agency is ''disregarding'' or ''dismissing'' these concerns.

In the 2019 Proposal, the EPA clearly stated that the unquantified HAP benefits associated with regulating power plants were ''significant,'' and enumerated the impacts on human health that have been linked to mercury (including neurologic, cardiovascular, genotoxic, and immunotoxic effects), the adverse health effects associated with non-mercury HAP (including cancer and chronic and acute health disorders that implicate organ systems such as the lungs and kidneys), and other effects on wildlife and ecosystems. 84 FR 2677. Contrary to commenters' assertions, the EPA did not ignore these concerns but said, ''The EPA acknowledges the importance of these benefits and the limitations on the Agency's ability to monetize HAP-specific benefits. The EPA agrees that such benefits are relevant to any comparison of the benefits and costs of a regulation.'' *Id.* at 2677–78. Moreover, as the Agency pointed out in its proposal, the 2011 RIA, which summarizes the factual findings and scientific studies which form the basis of this action as well as the EPA's 2016 action, discussed all of the monetized and unquantified benefits of regulating HAP from power plants, including the qualitative impacts on American Indian tribes,[16] distributional impacts,[17] and latency and persistence of the pollutant.[18] *Id.* at 2678.

In the context of this action, in which the lens we use to consider cost is based on a comparison of benefits to cost, we are choosing to weigh these concerns (and particulate matter (PM) co-benefits discussed in more detail in section II.C.3 of this preamble) differently than the manner in which the EPA evaluated them in the 2016 Supplemental Finding. While it is true that many of the benefits associated with reducing emissions of HAP from power plants have not been quantified, the EPA provided in the 2019 Proposal its reasons for concluding that those unquantified benefits were not likely to overcome the imbalance between the monetized HAP benefits and compliance costs in the record. First, as the EPA pointed out and as discussed below, most of the unquantified benefits of MATS are morbidity effects associated with exposure to mercury and other HAP. Second, to the extent commenters have identified potential mortality outcomes such as potential cardiovascular impacts from mercury exposure and potential cancer risks from exposure to other HAP, the EPA disagrees, for the reasons provided below, with the proposition that significant monetized benefits would be expected from either outcome.

As the commenters acknowledged, the SAB noted that IQ loss ''is not the most potentially significant health effect associated with mercury exposure, as other neurobehavioral effects, such as language, memory, attention, and other developmental indices, are more responsive to mercury exposure.'' 80 FR 75040. The Agency explained in its 2019 Proposal that the neurobehavioral effects of mercury exposure identified by the SAB as more ''potentially significant'' are morbidity, not mortality, outcomes. In the EPA's experience, the economic value of avoided morbidity effects (*e.g.,* impaired cognitive development, problems with language, abnormal social development, etc.) per incident is a small fraction of the monetizable value of avoided premature deaths. Further, when estimating the economic value of avoided cases of air pollution-related effects, the Agency has generally found that the aggregate value of the avoided illnesses (*e.g.,* hospital admissions, emergency department visits, cases of aggravated asthma, etc.) is small as compared to the total value of avoided deaths.[19]

And the EPA does not expect that to the extent the prevention of any premature deaths due to regulation of

[14] Commenters cite Executive Order 13035 in their comments, but we believe this was a typographical error.

[15] *FCC* v. *Fox,* 556 U.S. at 514.

[16] 2011 RIA at 7–40 to –49.

[17] 2011 RIA at 7–49 to –54.

[18] 2011 RIA at Chapter 4.

[19] *See* U.S. EPA 2010a: *Regulatory Impact Analysis for the Nitrogen Oxide National Ambient Air Quality Standards* Page 4–8 through 4–10; U.S. EPA. 2010b: *Regulatory Impact Analysis for the Sulfur Dioxide National Ambient Air Quality Standards Page 5–26 through 5–28;* U.S. EPA. 2012: *Regulatory Impact Analysis for the Particulate Matter National Ambient Air Quality Standards pages 5–69;* U.S. EPA. 2015: *Regulatory Impact Analysis for the Ozone National Ambient Air Quality Standards.* Pages 6–57 through 6–60.

HAP could be associated with the MATS rule, the value of that effect would be significant. With respect to potential premature deaths due to cardiovascular impacts from mercury exposure, as discussed further in section II.C.4 of this preamble, there is inconsistency among available studies as to the degree of association between methylmercury exposure and various cardiovascular system effects, including studies showing no association. As a result, based on the presently available information, the EPA believes available evidence does not support a clear characterization of the potential relationship between mercury exposure and cardiovascular mortality. For that reason, the EPA has not modeled risk (incidence) estimates for this health endpoint and has not included benefits associated with that endpoint in the analysis. With respect to potential premature deaths associated with inhalation exposure to non-mercury HAP, based on existing case-study analyses for EGUs which focus on the assessment of individual risk based on a number of conservative assumptions regarding exposure, the EPA anticipates that the mortality incidence associated with these non-mercury HAP exposures would be low (see section II.C.3 of this preamble for additional detail).[20] In sum, while the EPA recognizes the importance of unquantified benefits in a comparison against costs, the evaluation of evidence of unquantified benefits is based on qualitative information that helps understand the likelihood and potential scale of those benefits, relative to the monetized benefits and monetized costs. These qualitative assessments help confirm that unquantified benefits do not alter the underlying conclusion that costs greatly outweigh HAP benefits. This topic is discussed in more detail in section II.C.3 of this preamble.

The other factors identified by the commenters concern qualitative concerns such as impacts to tribal cultures and the concentration of public health risks occurring among certain population subgroups or for individuals living proximate to EGUs. The distribution of potential health effects may indicate more risk to some individuals than to others or more impacts to some groups like tribes than others; but in a cost-benefit comparison, the overall amount of the benefits stays the same no matter what the distribution of those benefits is. The EPA, therefore, believes it is reasonable to conclude that those factors to which the EPA previously gave significant weight—including qualitative benefits, and distributional concerns and impacts on minorities—will not be given the same weight in a comparison of benefits and costs for this action under CAA section 112(n)(1)(A).[21]

None of the information underlying the EPA's action here constitutes new factual findings, but rather is a reevaluation of the existing record to arrive at what the Agency believes to be the better policy regarding whether regulation is ''appropriate.'' In *Nat'l Ass'n of Home Builders* v. *EPA,* the D.C. Circuit reviewed challenges brought against the EPA that were similar to those concerns raised by commenters here and found that ''this kind of reevaluation is well within an Agency's discretion.'' 682 F.3d 1032, 1038 (D.C. Cir. 2012) (*NAHB*). There, the EPA reversed course on a prior policy, and petitioners in that case contended that ''EPA has provided no justification for its decision to reverse course . . . that is grounded in any information or experience that was not available to the Agency when it [adopted] the original rule . . . Rather, EPA merely revisited old arguments that had already been addressed as part of the original rulemaking.'' *NAHB,* 682 F.3d at 1036. Petitioners insisted in that case that the Agency was required to be held to a higher standard in reversing its prior decision based on the same factual record, but the D.C. Circuit disagreed. The Court held that *FCC* v. *Fox* ''foreclosed'' petitioners' argument, and that the Agency was permitted to rely on ''a reevaluation of which policy would be better in light of the facts.'' *Id.* at 1036–38. It is well settled that such re-weighing or re-balancing is permissible. *See State Farm,* 463 U.S. at 57 (''An agency's view of what is in the public interest may change, either with or without a change in circumstances.''); *Am. Trucking Ass'ns* v. *Atchison, Topeka & Santa Fe Ry. Co.,* 387 U.S. 397, 416 (1967) (declaring that an agency, ''in light of reconsideration of the relevant facts and its mandate, may alter its past interpretation and overturn past administrative rulings''); *Organized Village of Kake* v. *Dept. of Agriculture,* 795 F.3d 956 (9th Cir. 2015) (''We do not question that the Department was entitled in 2003 to give more weight to socioeconomic concerns than it had in 2001, even on precisely the same record.'').

As alluded to in these cases, the ''reasoned basis'' for an agency's change of interpretation need not be overly complex. Even Justice Breyer, who dissented from the *FCC* v. *Fox* majority, admitted, ''I recognize that sometimes the ultimate explanation for a change may have to be, 'We now weight the relevant considerations differently.' '' 556 U.S. at 550. Such change can, and often is, fueled by the basic functioning of American democracy—when new presidential administrations come into office—and the courts have recognized this to be a legitimate basis for a re-weighing of priorities. *See NAHB,* 682 F.3d at 1038 (noting the ''inauguration of a new President and the confirmation of a new EPA Administrator'' largely provided the reasoning for the EPA's change in policy). Unlike in *State Farm,* where the administering agency issued a rollback of a regulation requiring passive restraints in automobiles without even mentioning airbags at all, 463 U.S. at 48, 49, 51, here we acknowledge and address those factors to which we are giving less weight than was given in the 2016 Supplemental Finding. *Cf. Organized Village of Kake,* 795 F.3d at 968 (suggesting that a policy reversal could be premised upon ''merely decid[ing] that [the agency] valued socioeconomic concerns more highly than environmental protection''). The commenters disagree with the way the Agency has now weighed the facts and circumstances underlying the original appropriate and necessary finding and the Agency's consideration of cost in 2016. But that does not mean that the Agency has not provided a ''reasoned basis'' for its action.

Comment: Some commenters asserted that a ''more detailed justification'' of the EPA's change in policy is required in this case given the ''serious reliance interests'' of states, the public, and industry in maintaining the appropriate and necessary determination and the MATS rule (citing *Fox,* 556 U.S. at 515; *Encino Motorcars, LLC* v. *Navarro,* 136 S. Ct. 2117 (2016)). With respect to state and public interests, the commenters pointed to the fact that the implementation of MATS has led to a dramatic decrease in HAP emissions

[20] U.S. EPA, *Supplement to the Non-Hg Case Study Chronic Inhalation Risk Assessment In Support of the Appropriate and Necessary Finding for Coal- and Oil-Fired Electric Generating Units,* November 2011, EPA–452/R–11–013.

[21] Nor does the EPA agree with the commenters that Executive Orders 12898 and 13045 require a particular outcome in the EPA's appropriate and necessary finding. Executive orders recognize that agencies must weigh conflicting goals, priorities, and associated costs as a necessary part of reasoned decision making. Other more recent executive orders, which emphasize the environmentally responsible use and development of domestic natural resources, are also part of the policy calculus to consider. *See, e.g.,* Executive Order No. 13783, 82 FR 16093 (March 28, 2017) (directing the EPA to review for possible reconsideration any rule that could ''potentially burden the development or use of domestically produced energy resources, with particular attention to oil, natural gas, coal, and nuclear energy resources.

from power plants, and that the public has an interest in having those controls remain in place and in the continuation of improvements in air quality and the corresponding public health and environmental benefits. Other commenters pointed to the major capital investments that regulated utilities have already made to comply with MATS and asserted that a reversal of the 2016 Supplemental Finding creates uncertainty for the standards themselves. The commenters argued that these reliance interests, which they claim depend on the maintenance of the 2016 Supplemental Finding, therefore, require the EPA to provide the heightened justification required under *Fox* and *Encino Motorcars* for its reversal of that finding.

Response: The EPA disagrees with the commenters that the Agency is required to provide a ''heightened justification'' for this action. In *Fox,* the U.S. Supreme Court stated that as a general matter, no heightened scrutiny or review applies to decisions by agencies to reverse policies, and that policy changes need not be justified by reasons more substantial than those required to adopt a policy in the first instance. *See Fox,* 556 U.S. at 514–15. But the Court noted that ''in such cases it is not that further justification is demanded by the mere fact of policy change; but that a reasoned explanation is needed for disregarding facts and circumstances that underlay or were engendered by the prior policy, *i.e.,* . . . when its prior policy has engendered serious reliance interests that must be taken into account.'' *Id.* at 515. The Court elaborated on this principle in *Encino Motorcars* v. *Navarro,* 136 S. Ct. 2117 (2016). There, the Court found that the retail automobile and truck dealership industry had relied for decades on the Department of Labor's (DOL) position that service advisors are exempt from the Fair Labor Standard Act's overtime pay requirements. Given this reliance and the impact that the DOL's change in policy would have on the industry (citing ''systemic, significant changes to the dealerships' compensation arrangements'' and the risk that non-conforming dealerships could face ''substantial FLSA liability''), the Court held that the DOL had not provided good reasons for its change in policy, noting that the agency ''said almost nothing'' and that it merely stated that exempting such employees from overtime pay was contrary to the statute and it believed its interpretation was reasonable. *Encino Motorcars,* 136 S. Ct. at 2126–27. The Court stated that ''an agency may justify its policy choice by explaining why that policy is more consistent with statutory language than alternative policies,'' *Id.* (internal citations omitted), but chided the DOL for failing to include such a justification in its policy reversal.

First, we note that commenters raising serious reliance interests differ in at least one major way from the petitioners in *Encino Motorcars.* While those petitioners faced very real impacts based on the Agency's changed position (''systemic, significant'' changes to employee compensation and potential liabilities from failure to comply with the changed policy), the reliance interests cited by the commenters are not upended by this final action. As we stated in the proposal, the EPA finds that its re-evaluation of the costs and benefits of regulation of HAP emissions from power plants will not rescind or affect the regulatory program upon which the commenters rely, due to binding D.C. Circuit precedent (*see* section II.D of this preamble). To the contrary, the EPA is finalizing the results of the proposed RTR of MATS in this final action. The EPA determined that after compliance with MATS, the residual risks due to emissions of HAP from the Coal- and Oil-Fired EGU source category are acceptable in accordance with CAA section 112, and that there are no developments in HAP emissions controls to achieve further cost-effective reductions beyond the current standards. Therefore, based on the results of the RTR analyses, the Agency is promulgating this final action that maintains MATS in its current form.

Second, unlike the DOL in *Encino Motorcars,* the EPA has provided its reasons for changing its determination that the regulation of HAP emissions from power plants is not ''appropriate.'' As explained in the proposal and in this preamble, the EPA believes that a consideration of costs that compares the costs of compliance with the HAP-specific benefits of regulation ''is more consistent with statutory language'' than the 2016 Supplemental Finding's ''preferred approach.'' Further, as discussed in section II.C.3 of this preamble, we do not think the determination that regulation is ''appropriate'' under CAA section 112(n)(1)(A), an air toxics provision, should primarily hinge on the monetary benefits associated with reductions in emissions of pollutants not regulated under CAA section 112. We believe the explanations provided in this action fully comply with the case law's requirement to provide a reasoned explanation for our reversal of the 2016 Supplemental Finding.

3. The EPA's Alternative Benefit-Cost Approach Used in the 2016 Supplemental Finding Improperly Considered Co-Benefits From Non-HAP Emissions Reductions

The 2016 Supplemental Finding presented an alternative approach under which the EPA made an independent finding under CAA section 112(n)(1)(A) based on a formal benefit-cost analysis [22] that it was appropriate and necessary to regulate EGUs under CAA section 112. *See* 81 FR 24427. The formal benefit-cost analysis used in the 2016 Supplemental Finding relied on information reported in the RIA developed for the 2012 MATS Final Rule pursuant to Executive Orders 12866 and 13563 and applicable statutes other than the CAA (*e.g.,* the Regulatory Flexibility Act and the Unfunded Mandates Reform Act), as informed by Office of Management and Budget (OMB) guidance [23] and the EPA's Economic Guidelines.[24]

The quantified benefits accounted for in the formal benefit-cost analysis in the 2016 Supplemental Finding's alternative approach included both HAP and non-HAP air quality benefits. Based on the 2011 RIA, the EPA projected the quantifiable benefits of HAP reductions under the rule to be $4 to $6 million in 2015.[25] The RIA also identified unquantified benefits associated with reducing HAP emissions from EGUs.

[22] We use the term ''formal benefit-cost analysis'' to refer to an economic analysis that attempts to quantify all significant consequences of an action in monetary terms in order to determine whether an action increases economic efficiency. A benefit-cost analysis evaluates the favorable effects of policy actions and the associated opportunity costs of those actions. The favorable effects are defined as benefits. Opportunities forgone define economic costs. A formal benefit cost analysis seeks to determine whether the willingness to pay for an action by those advantaged by it exceeds the willingness to accept the action by those disadvantaged by it. The key to performing benefit-cost analysis is the ability to measure both benefits and costs in monetary terms so that they are comparable. Assuming all consequences can be monetized, actions with positive net benefits (*i.e.,* benefits exceed costs) improve economic efficiency. This usage is consistent with the definition of a benefit-cost analysis used in the economics literature and the EPA's Guidelines for Preparing Economic Analyses.

[23] U.S. OMB. 2003. *Circular A–4 Guidance to Federal Agencies on Preparation of Regulatory Analysis.* Available at *https://www.whitehouse.gov/sites/whitehouse.gov/files/omb/circulars/A4/a-4.pdf.*

[24] U.S. EPA. 2014. *Guidelines for Preparing Economic Analyses.* EPA–240–R–10–001. National Center for Environmental Economics, Office of Policy. Washington, DC. December. Available at *https://www.epa.gov/environmental-economics/guidelines-preparing-economic-analyses.* Docket ID Item No. EPA–HQ–OAR–2009–0234–20503.

[25] Like the 2011 RIA, all benefits and costs in this and subsequent sections of this preamble are reported in 2007 dollars.

The EPA projected that the co-benefits associated with reducing these non-HAP pollutants would be substantial. Indeed, these projected co-benefits comprised the overwhelming majority (approximately 99.9 percent) of the monetized benefits of MATS ($36 billion to $89 billion in 2015). The compliance costs of the 2012 MATS Final Rule were projected to be $9.6 billion in 2015.[26] These compliance costs are an estimate of the increased expenditures in capital, fuel, and other inputs by the entire power sector to comply with MATS emissions requirements, while continuing to meet a given level of electricity demand.

a. Summary of 2019 Proposal

The EPA proposed to find that it had erred in the 2016 Supplemental Finding's benefit-cost analysis in giving equal weight to the air quality co-benefits projected to occur as a result of the reductions in HAP. The focus of CAA section 112(n)(1)(A) is HAP emissions reductions.

The EPA outlined in detail in the 2019 Proposal that the Agency had erred in concluding in the 2016 Supplemental Finding that the statutory text of CAA section 112(n)(1)(A) and the legislative history of CAA section 112 more generally supported the position that it was reasonable to give equal weight to co-benefits in a CAA section 112(n)(1)(A) appropriate and necessary finding. 81 FR 24439. The EPA explained in the 2019 Proposal that, because the vast majority of the estimated monetized benefits in the 2011 RIA that were estimated to result from MATS are associated with reductions in fine particulate matter ($PM_{2.5}$) precursor emissions, the EPA had erred in the 2016 Supplemental Finding by giving equal weight to non-HAP co-benefits in making the appropriate and necessary determination. As the 2019 Proposal observed, Congress, in the National Ambient Air Quality Standards (NAAQS) program, established a rigorous system for setting standards of acceptable levels of criteria air pollutants requisite to protect public health with an adequate margin of safety, and by state, regional, and national rulemakings establishing control measures to meet those levels.

The EPA did acknowledge the importance of unquantified benefits in the 2019 Proposal, but also pointed out the limitations of the Agency's ability to monetize HAP-specific benefits. The EPA explained that unquantified benefits are relevant to any comparison of the benefits and costs of regulation. Because unquantified benefits are, by definition, not considered in monetary terms, the EPA proposed that the Administrator would evaluate the evidence of unquantified benefits and determine the extent to which they alter any appropriate and necessary conclusion based on the comparison of monetized costs and benefits.

b. Final Rule

The EPA is finalizing the determination outlined in the 2019 Proposal. The EPA believes that the alternative approach to the 2016 Supplemental Finding was fundamentally flawed in applying a formal cost-benefit analysis to the specific decision making standard directed by CAA section 112(n)(1)(A) because, in the context of the appropriate and necessary finding, doing so implied that an equal weight was given to the non-HAP co-benefit emission reductions and the HAP-specific benefits of the regulation. The total cost of compliance with MATS ($9.6 billion in 2015) vastly outweighs—by a factor of 1 thousand, or 3 orders of magnitude—the monetized HAP benefits of the rule ($4 to $6 million in 2015). In these circumstances, to give equal weight to the monetized $PM_{2.5}$ co-benefits would permit those benefits to become the driver of the regulatory determination, which the EPA believes would not be appropriate for the reasons stated in the proposal and set forth below.

c. Comments and Responses

Comment: Many commenters argued that the EPA's proposed approach to considering co-benefits in the CAA section 112(n)(1)(A) appropriate and necessary determination is not consistent with the statute. The commenters believe that basic principles of statutory construction do not allow the EPA to read CAA section 112(n)(1)(A) only in isolation. The commenters asserted that the EPA has not explained why CAA section 112(n)(1)(A)'s reference to regulation of EGUs allows the Agency to disregard a portion of the consequences of its decision. One commenter noted that the language in the Senate Report on the 1990 amendments to CAA section 112, which directs the EPA to consider the co-benefits of HAP regulation, is the closest specific indication of congressional intent for interpreting CAA section 112(n). The commenter also pointed to the portion of CAA section 112(n) that requires the EPA to conduct a study of hazards to health likely to occur from utility HAP emissions after implementation of other non-HAP provisions of the CAA, and suggested that this provision implies that the EPA should evaluate non-HAP benefits of HAP regulations to see if they are sufficient to establish the case for HAP regulation. One commenter noted that the EPA's approach arbitrarily excludes from consideration a critically important set of the consequences of the EPA's decision, namely the public health concerns at the heart of the CAA.

Response: The EPA agrees with the commenters that it is critical to examine the language in CAA section 112(n)(1)(A), as well as the overall context of CAA section 112, in determining the scope of the cost consideration for the appropriate and necessary determination. In CAA section 112, Congress has a particularized focus on reducing HAP emissions and addressing public health and environmental risks from those emissions. In CAA section 112(n)(1)(A), Congress directs the EPA to decide whether regulation of EGUs is appropriate and necessary under CAA section 112, *i.e.,* whether the deployment of specific CAA provisions targeted at reducing HAP emissions from the EGU sector is warranted. The EPA believes that it cannot answer this question by pointing to benefits that are overwhelmingly attributable to reductions in an entirely different set of pollutants not targeted by CAA section 112. The EPA believes that it is illogical for the Agency to make a determination, informed by a study of what hazards remain after implementation of other CAA programs, that regulation under CAA section 112, which is expressly designed to deal with HAP emissions, is ''appropriate'' principally on the basis of criteria pollutant impacts.

The EPA believes that relying almost exclusively on benefits accredited to reductions in pollutants not targeted by CAA section 112 is particularly inappropriate given that those other pollutants are already comprehensively regulated under other CAA provisions, such as those applying to the NAAQS. As the EPA outlined in the 2019 Proposal, the determination that it is not appropriate to give equal weight to non-HAP co-benefits in making the appropriate and necessary determination is further supported by the fact that Congress established a rigorous system for setting standards of acceptable levels of criteria air pollutants and provided a comprehensive framework directing the implementation of those standards in

[26] See Table 3–5 of the RIA: *https://www3.epa.gov/ttn/ecas/docs/ria/utilities_ria_final-mats_2011-12.pdf.*

order to address the health and environmental impacts associated with those pollutants. *See, e.g.,* 42 U.S.C. 7409; 7410; 7501; 7502; 7505a; 7506; 7506a; 7507; 7509; 7509a; 7511; 7511a; 7511b; 7511c; 7511d; 7511e; 7511f; 7512; 7512a; 7513; 7513a; 7513b; 7514; and 7515. The vast majority of the monetized benefits in the 2011 RIA that were estimated to result from MATS are associated with reductions in $PM_{2.5}$ precursor emissions, principally nitrogen oxides (NO_X) and sulfur dioxide (SO_2). NO_X, SO_2, and $PM_{2.5}$ are already addressed by a multitude of statutory provisions governing levels of these pollutants, including the NAAQS provisions that require the EPA to set standards for criteria pollutants requisite to protect public health with an adequate margin of safety, and by state, regional, and national rulemakings establishing control measures to meet those levels.

The 2016 Supplemental Finding pointed to CAA section 112(n)(1)(A)'s directive to ''perform a study of the hazards to public health reasonably anticipated to occur as a result of emissions by electric utility steam generating units of [HAP] after imposition of the requirements of [the CAA],'' and noted that the requirement to consider co-benefit reduction of HAP resulting from other CAA programs highlighted Congress' understanding that programs targeted at reducing non-HAP pollutants can and do result in the reduction of HAP emissions. *Id.* The finding also noted that the Senate Report on CAA section 112(d)(2) recognized that MACT standards would have the collateral benefit of controlling criteria pollutants. *Id.* However, these statements acknowledging that reductions in HAP can have the collateral benefit of reducing non-HAP emissions and vice versa, provides no support for the proposition that any such co-benefits should be considered on equal footing as the HAP-specific benefits when the Agency makes its finding under CAA section 112(n)(1)(A).

The study referenced in CAA section 112(n)(1)(A) specifically focuses on the hazards to public health that will reasonably occur as a result of HAP emissions, not harmful emissions in general. (''The Administrator shall perform a study of the hazards to public health reasonably anticipated to occur as a result of emissions by electric utility steam generating units of pollutants listed under subsection (b) of this section after imposition of the requirements of this chapter.'') According to that section, ''[t]he Administrator shall regulate electric utility steam generating units under this section, if the Administrator finds such regulation is appropriate and necessary after considering the results of the study required by this subparagraph.'' The text on its face suggests that Congress wanted the Administrator's appropriate and necessary determination to be focused on the health hazards related to HAP emissions and the potential benefits of avoiding those hazards by reducing HAP emissions. While the provision in one sense does acknowledge the existence of co-benefits—*i.e.,* by referencing the potential for ancillary reductions of HAP emissions by way of CAA provisions targeting other pollutants—it does not follow from this that any ancillary reductions of criteria pollutants that may be projected to result from the regulation of EGU HAP emissions should, therefore, play a part in the Administrator's consideration under CAA section 112(n)(1)(A) whether the regulation of EGUs is ''appropriate and necessary.'' To the contrary, the statutory direction to consider whether it is appropriate and necessary to regulate HAP after criteria pollutants have been addressed by the CAA's other requirements suggests that it is *not* proper for the co-benefits of further criteria pollutant reductions to provide the dominant justification for an affirmative CAA section 112(n)(1)(A) determination. Certainly, Congress' instruction to the EPA that it study HAP effects under CAA section 112 *after* implementation of other CAA provisions cuts against any suggestion that such benefits should be given equal consideration in a CAA section 112(n)(1)(A) determination.

Comment: Several commenters argued that the EPA's proposed approach, of not providing consideration to co-benefits equal to the consideration provided to the benefits specific to HAP reductions, takes a too-narrow approach that conflicts with *Michigan.* Commenters pointed out that the Court found that CAA section 112(n) tells the EPA to undertake a ''broad and all-encompassing'' review of ''all the relevant factors.'' 135 S. Ct. at 2707. Commenters argued that if the Court read ''appropriate'' to be a ''broad and all-encompassing term,'' then the EPA cannot excise relevant factors from consideration. Commenters also stated that the Court, in instructing the EPA to consider cost, appeared to adopt a broad reading of the word ''cost,'' including ''more than the expense of complying with regulations; any disadvantage could be termed a cost.'' 137 S. Ct. at 2707.

Response: Nothing in the *Michigan* decision decides this issue. To the contrary, the Court said that the proper treatment of co-benefits is ''a point we need not address.'' 135 S.Ct. at 2711. Additionally, commenters seem to mistake the EPA's position (*see, e.g.,* Environmental Protection Network (EPN) comment at 25 (April 17, 2019) (Docket ID Item No. EPA–HQ–OAR–2018–0794–2261) (referring to ''EPA's crabbed claim that it can focus only on reduction of 'HAP emissions—without even considering reductions in non-HAP pollutants').'' *See* also States and Local Governments comment at 35–36 (April 17, 2019) (Docket ID Item No. EPA–HQ–OAR–2018–0794–1175) (''In proposing to exclude consideration of [co-benefits], EPA misinterprets and misapplies the Supreme Court's directive in *Michigan.*'')). The commenters essentially argue that the language in *Michigan* requires the EPA to review ''all the relevant factors,'' including co-benefits. As described at length in the 2019 Proposal and other parts of this section of this preamble, the EPA *is* considering what significance co-benefits have for its determination under CAA section 112(n)(1)(A)—but we are concluding that the finding must be justified overwhelmingly by the HAP benefits due to the statutory structure.

Comment: Some commenters argued that existing case law, beyond the *Michigan* decision, supports inclusion of indirect benefits into an agency's benefit-cost analysis. A commenter quoted the D.C. Circuit's statement in *American Trucking Ass'ns* v. *EPA* that the EPA must consider both the direct and indirect effects of pollutants, rather than only ''half of a substance's health effects.'' 175 F.3d 1027, 1051–53 (D.C. Cir. 1999), *rev'd on other grounds sub nom. Whitman* v. *Am. Trucking Ass'ns, Inc.,* 531 U.S. 457 (2001). The commenter also cited a Fifth Circuit case in which the Court held that the EPA had to consider the indirect safety harm that could result from the use of substitute, non-asbestos brakes when attempting to ban asbestos-based brakes under the Toxic Substances Control Act. *Corrosion Proof Fittings* v. *EPA,* 947 F.2d 1202, 1225 (5th Cir. 1991). A few commenters also noted the D.C. Circuit's favorable treatment of the EPA's consideration of co-benefits in regulating HAP from boilers, process heaters, and incinerators in *U.S. Sugar Corp.* v. *EPA,* 830 F.3d 579, 591, 625 (D.C. Cir. 2016).

Response: As explained elsewhere in this preamble, the EPA is interpreting and applying the statutory directive to make an appropriate and necessary determination under CAA section 112(n)(1)(A) and determining what role

consideration of co-benefits should play in making that determination. None of the case law the commenters cite pertains to CAA section 112(n)(1)(A), and, therefore, the case law is not directly relevant to this action.

As explained in the 2019 Proposal and in this preamble, the EPA believes that it would be inconsistent with the statute and with case law to base the appropriate and necessary finding on a monetized benefit estimate that is almost exclusively attributable to reductions of non-HAP pollutants. Further, the CAA sets out a specific regulatory scheme for the PM pollutants in question, the NAAQS, and as a first principle the EPA believes those regulations, not CAA section 112, should be the primary method by which the Agency targets those pollutants.

Comment: Several commenters argued that the EPA's approach of giving less weight to co-benefits in the appropriate and necessary determination is fundamentally arbitrary. The commenters pointed out that the $PM_{2.5}$ emission reductions are a direct result of HAP emissions controls, and that there is no way to reduce the HAP emissions without reducing PM emissions. Some commenters asserted that excluding some benefits from the appropriate and necessary determination creates a biased analysis. One commenter argued that the EPA's approach is arbitrary and contrary to *Michigan* and other U.S. Supreme Court precedent because it ''fai[ls] to consider [such] an important aspect of the problem.'' *Michigan,* 135 S. Ct. at 2707 (quoting *State Farm,* 463 U.S. at 53).

Response: The EPA acknowledges the existence and importance of these co-benefits. However, when the EPA is comparing benefits to costs as a required prerequisite to regulation, it is critical to examine the particular statutory provision that is being implemented. That statutory provision may limit the relevance of certain costs and benefits—*e.g.,* serve to establish that any benefits attributable to the ancillary reduction of pollutant emissions that are not the focus of the provision at issue are *not* ''an important aspect of the problem'' that Congress is seeking to address. As noted in the 2019 Proposal and in earlier responses to comments, in CAA section 112(n)(1)(A), Congress directs the EPA to decide whether regulation of EGUs is appropriate and necessary under CAA section 112; the EPA believes that it is not appropriate to answer this question in the affirmative by pointing to benefits that are overwhelmingly attributable to reductions in an entirely different set of pollutants that CAA section 112 is not designed to address. In fact, the EPA believes that it would be arbitrary and capricious to do so. *See Motor Vehicle Mfrs. Ass'n* v. *State Farm Mut. Auto. Ins. Co.,* 463 U.S. 29, 43 (1983) (''Normally, an agency rule would be arbitrary and capricious if the agency has relied on factors which Congress has not intended it to consider.'').

The EPA is not turning a blind eye to the reasonably predictable consequences of MATS. The 2011 RIA appropriately details the magnitude of the $PM_{2.5}$-related co-benefits in the form of avoided premature deaths, hospital admissions, emergency department visits and asthma attacks, among other endpoints. However, CAA section 112(n)(1)(A) requires a threshold determination of whether any regulation of EGUs under CAA section 112 is ''appropriate and necessary.'' The EPA believes that this inquiry must be focused primarily on the risks posed by the pollutants targeted by CAA section 112, *i.e.,* HAP emissions. The gross disparity between monetized costs and HAP benefits, which should be the primary focus of the Administrator's determination in CAA section 112(n)(1)(A), is so great as to make it inappropriate to form the basis of the necessary statutory finding. While the Agency acknowledges that PM co-benefits are substantial, the Agency cannot rely on PM co-benefits to supplant the primary factors Congress directed the Administrator to consider.

Comment: Several commenters asserted that the EPA's approach to considering co-benefits under the CAA section 112(n)(1)(A) analysis was inappropriate because it is unprecedented in the EPA's regulatory practice and contrary to OMB and EPA policy. Commenters asserted that co-benefits are universally accepted as an important tool in regulatory economics and economic planning. Commenters quoted OMB Circular A–4 as directing agencies in conducting RIAs to ''look beyond the direct benefits and direct costs of your rulemaking and consider any important ancillary benefits and countervailing risks.'' The commenters also identified the EPA's ''Guidelines for Preparing Economic Analyses'' that states: ''An economic analysis of regulatory or policy options should present all identifiable costs and benefits that are incremental to the regulation or policy under consideration. These should include directly intended effects and associated costs, as well as ancillary (or co-) benefits and costs.'' Commenters also cited to previous clean air rules where the EPA has afforded co-benefits equal weight in cost-benefit analyses.

Response: The EPA developed the 2011 RIA for the 2012 MATS Final Rule pursuant to Executive Orders 12866 and 13563, as well as certain other applicable statutes, as informed by OMB guidance and the EPA's Economic Guidelines. It is true that, in this action, the EPA is drawing on information generated in that RIA in order to make the determination required under CAA section 112(n)(1)(A) concerning whether regulation of EGUs under CAA section 112 is appropriate. How costs are to be considered in making the congressionally-directed CAA section 112(n)(1)(A) determination, however, is not governed independent from statutory requirements, by preexisting OMB or EPA guidelines, nor could it be. Furthermore, for the many reasons explained elsewhere in this preamble and in the 2019 Proposal, the CAA section 112(n)(1)(A) determination is governed by the particular statutory provision at issue, and, therefore, is distinct from any other CAA action.

In the context of conducting the CAA section 112(n)(1)(A) determination, the EPA finds it is not only appropriate but indeed, necessary for the EPA to interpret and apply the particular provision of CAA section 112(n)(1)(A), which as mentioned earlier specifically cites to HAP listed under section 112(b) of the CAA. To be valid, the EPA's analytical approach to that provision must recognize Congress' particular concern about risks associated with HAP and the benefits that would accrue from reducing those risks. OMB and EPA guidance outline regulatory principles that agencies are encouraged to follow to the extent permissible under law. These guidance documents, and the standard economic principles reflected in them, are not necessarily informative regarding how Congress intended the EPA to make the CAA section 112(n)(1)(A) determination, nor should they be read to override statutory text and structure that, as explained earlier in this preamble, requires a focus on a limited set of costs and benefits. Although an analysis of all reasonably anticipated benefits and costs in accordance with generally recognized benefit-cost analysis practices (including extending analytic efforts to ancillary impacts in a balanced manner across both benefits and costs) is appropriate for informing the public about the potential effects of any regulatory action, as well as for complying with the requirements of Executive Order 12866, it does not follow that equal consideration of all benefits and costs, including co-benefits, is warranted, or even

permissible, for the specific statutory provision requiring the EPA to make an appropriate and necessary finding called for under CAA section 112(n)(1)(A).

Comment: Some commenters asserted that the EPA's 2019 Proposal erroneously suggests that CAA sections 110 and 112 must be treated as mutually exclusive authorities for reducing the public health impacts of PM emissions. Commenters argued that there is no basis to ignore the benefits of reducing pollutants merely because they are also subject to regulation under state and federal implementation plans approved to implement the NAAQS. One commenter noted that the existence of other CAA provisions that deal with criteria pollutant emissions likely indicates Congress' deep concern about the health and environmental risks they pose. One commenter argued that there is no legal support for the idea that CAA section 110 or 112 requires exclusivity; the EPA is not required to pick one avenue through which it can impact PM emissions. The commenter noted that many CAA provisions can address PM, such as those for interstate transport and regional haze, and the EPA itself has encouraged states in their implementation planning to consider selecting controls that will minimize emissions of multiple pollutants. Another commenter acknowledged that the EPA does not argue that the other provisions should be the exclusive vehicle for addressing criteria pollutants, but this commenter asserted that the 2019 Proposal did not explain how criteria pollutant reductions could be realized more effectively by some other legal mechanism and did not claim that criteria pollutants have been fully controlled through those other programs. One commenter also argued that the EPA's proposal is particularly unfounded because many metal HAP are emitted as PM.

Response: The EPA disagrees with the commenters. The EPA's discussion of co-benefits, and the impropriety of giving them equal weight to HAP-specific benefits within the context of the appropriate and necessary determination, is based on an interpretation of CAA section 112(n)(1)(A), a provision enacted by Congress to address the unique situation facing EGUs. We have limited our analysis to the specifically tailored provision of CAA section 112(n)(1)(A), in which Congress recognized that EGUs would face regulation under numerous parts of the CAA and chose to ask the EPA to consider whether further regulation of EGUs under CAA section 112 would be appropriate and necessary. As noted previously in this preamble and the 2019 Proposal, the vast majority of estimated monetized benefits resulting from MATS are associated with reductions in $PM_{2.5}$ precursor emissions, principally NO_X and SO_2. Both NO_X and SO_2 are criteria pollutants in their own right and are already addressed by the numerous statutory provisions governing criteria pollutants. In interpreting and applying CAA section 112(n)(1)(A), we believe it is important to acknowledge that the CAA has established numerous robust avenues for minimizing PM-precursor emissions to a level that is requisite to protect public health with an adequate margin of safety. Because other CAA programs are already in place to ensure reductions in criteria pollutants to the level requisite to protect public health with an adequate margin of safety, the EPA believes that it is not reasonable to point to criteria pollutant co-benefits as the primary benefit to justify regulation of EGUs under a provision of the CAA that authorizes such regulation only where the Administrator determines that it is ''appropriate and *necessary*'' to do so.[27]

With respect to one commenter's assertion that the EPA's approach was particularly unfounded given that many metal HAP are emitted as PM, the EPA agrees that most non-mercury metal HAP are emitted as PM. In fact, the EPA established an emission standard for filterable PM in the 2012 MATS Final Rule that serves as a surrogate for the non-mercury metal HAP (recognizing that controls for PM are also effective for the non-mercury metal HAP). However, the fact that the non-mercury metal HAP are emitted in a solid particulate form does not mean that the EPA should give equal weight to the benefits from removal of all PM. As described in the 2011 RIA for the 2012 MATS Final Rule, $PM_{2.5}$ benefits result from emissions reductions of SO_2 (1,330,000 tons), NO_X (46,000 tons), carbonaceous $PM_{2.5}$ (6,100 tons), and crustal $PM_{2.5}$ (39,000 tons). Control of directly-emitted filterable PM for purposes of controlling non-mercury metal HAP constituted approximately 5 percent of the total $PM_{2.5}$ health co-benefits of the rule. Based on analysis of available data, the EPA estimates that non-mercury metal HAP represent, at most, 0.8 percent of this directly emitted filterable PM.[28] The actual HAP-related benefits of controlling non-mercury metal HAP were unquantified. Again, the vast majority of estimated monetized benefits resulting from MATS are associated with reductions in premature mortality resulting from emissions reductions of PM precursors and not from metal HAP or even direct PM.

Comment: Several commenters asserted that the EPA has not explained what weight is given to co-benefits, or how the EPA chose that standard, aside from saying that the weight is less than what is given to HAP-specific benefits. One commenter noted that the EPA essentially claims that co-benefits cannot affect the appropriate and necessary determination unless quantified HAP benefits are ''moderately commensurate'' with compliance costs, but the EPA does not provide any clarity on the point at which HAP benefits would be ''moderately commensurate'' to allow the EPA to rely on co-benefits.

Response: The Administrator has concluded that the following procedure provides the appropriate method under which the EPA should proceed to determine whether it is appropriate and necessary to regulate EGUs under CAA section 112(n)(1)(A). First, the EPA compares the monetized costs of regulation against the subset of HAP benefits that could be monetized. Here, those costs are disproportionate to the monetized benefits, by three orders of magnitude. That does not demonstrate ''appropriate and necessary.'' Second, the EPA considers whether unquantified HAP benefits may alter that outcome. For the reasons proposed in February 2019 and further discussed in this final action, the EPA determines they do not. Third, the EPA considers whether it is appropriate, notwithstanding the above, to determine that it is ''appropriate and necessary'' to regulate EGUs under CAA section 112(n)(1)(A) out of consideration for the PM co-benefits that result from such regulation. For the reasons proposed in February 2019 and set forth in this final action, on the record before the Agency, it is not appropriate to do so.

Here, almost the entirety of monetized benefits (about 99.9 percent) of MATS

[27] A number of commenters raised this same issue and made this same point. *See, e.g.,* Docket ID Item Nos. EPA–HQ–OAR–2018–0794–1135, –1178, –1189, –1190.

[28] As mentioned in the *Emission Factor Development for RTR Risk Modeling Dataset for Coal- and Oil-fired EGUs* memorandum (Docket ID Item No. EPA–HQ–OAR–2018–0794–0010), the EPA developed ratios of non-mercury metal and filterable PM emissions for use in estimating emissions from coal- and oil-fired EGUs without current non-mercury metal emissions data. These ratios were determined by dividing the fuel-specific averages of the 2010 MATS Information Collection Request (ICR) non-mercury metals data, combined by control technique where possible, by the filterable PM emissions data. The ratios represent the amount of non-mercury metals present in filterable PM. For more detail, see memorandum titled *Non-mercury Metals Content of Filterable Particulate Matter* in the docket for this action.

reflected in the RIA were derived from non-HAP co-benefits. Had the HAP-specific benefits of MATS been closer to the costs of regulation, a different question might have arisen as to whether the Administrator could find that co-benefits legally form part of the justification for determination that regulation of EGUs under CAA section 112(d) is appropriate and necessary. The EPA does not need to, and does not, determine whether that additional step would be appropriate in this factual scenario given that the monetized and unquantified HAP-specific benefits do not come close to a level that would support the prior determination. Under the interpretation of CAA section 112(n)(1)(A) that the EPA adopts in this action, HAP benefits, as compared to costs, must be the primary question in making the 'appropriate and necessary' determination. While the Administrator could consider air quality benefits other than HAP-specific benefits in the CAA section 112(n)(1)(A) context, consideration of these co-benefits could permissibly play only, at most, a marginal role in that determination, given that the CAA has assigned regulation of criteria pollutants to other provisions in title I of the CAA, specifically the NAAQS regime pursuant to CAA sections 107–110, which requires the EPA to determine what standards for the ambient concentration of PM are necessary to protect human health. Here, to the extent that the alternative approach set forth within the 2016 Supplemental Finding was legally grounded in co-benefits, the massive disparity between co-benefits and HAP benefits on this record would mean that that alternative approach clearly elevated co-benefits beyond their permissible role.

If the Administrator were to consider the size of the $PM_{2.5}$-related co-benefits in deciding whether regulating EGUs under CAA section 112(d) is appropriate and necessary, he should also consider taking into account key assumptions affecting the size and distribution of these co-benefits and potential uncertainty surrounding them. In the past, the EPA has highlighted a number of these assumptions as having particularly significant effect on estimates of PM-related benefits, including assumptions about: The causal relationship between PM exposure and the risk of adverse health effects; the shape of the concentration-response relationship for long-term exposure-related $PM_{2.5}$ and the risk of premature death; the toxicity of individual $PM_{2.5}$ particle components; the levels of future $PM_{2.5}$; the validity of the reduced-form technique used to relate $PM_{2.5}$ emission precursors to the number and value of $PM_{2.5}$ adverse health effects; and the approach used to assign a dollar value to adverse health effects. The Agency has separately noted that, in general, it is more confident in the size of the risks we estimate from simulated $PM_{2.5}$ concentrations that coincide with the bulk of the observed PM concentrations in the epidemiological studies that are used to estimate the benefits. Likewise, the Agency is less confident in the risk estimated from simulated $PM_{2.5}$ concentrations that fall below the bulk of the observed data in these studies.[29] Furthermore, when setting the 2012 PM NAAQS, the Administrator acknowledged greater uncertainty in specifying the ''magnitude and significance'' of PM-related health risks at PM concentrations below the NAAQS. As noted in the preamble to the 2012 PM NAAQS final rule, in the context of selecting an alternative NAAQS, the ''EPA concludes that it is not appropriate to place as much confidence in the magnitude and significance of the associations over the lower percentiles of the distribution in each study as at and around the long-term mean concentration.'' (78 FR 3154, January 15, 2013).

Comment: Some commenters argued that the EPA is inappropriately giving full weight to the consideration of indirect costs of regulating EGUs while simultaneously giving less than equal weight to co-benefits. One commenter argued that comparing direct and indirect costs to only the ''direct'' benefits associated with HAP reductions is not an apples-to-apples comparison. Some commenters stated that the EPA is including not only compliance costs incurred by the sources regulated under MATS, but also costs incurred by other power plants that are not regulated under MATS due to the effects on the power sector of regulated sources' investing in pollution abatement technologies or taking other steps to reduce emissions. The commenter argued that the EPA does not explain why it is appropriate to discount or ignore co-benefits while giving full weight to indirect compliance costs.

Response: The EPA disagrees with the commenters that co-benefits and the types of compliance costs that the commenters consider ''indirect'' must be given comparable treatment within this action. As discussed throughout this section, the EPA believes that it is inappropriate to rely, as did the alternative, benefit-cost approach in the 2016 Supplemental Finding, almost exclusively on benefits accredited to reductions in pollutants not targeted by CAA section 112 when those other pollutants are already extensively regulated under other CAA provisions.

Additionally, unlike benefits, which can be disaggregated into benefits attributable to reduction in HAP and co-benefits attributable to reduction in non-HAP pollutants, costs cannot similarly be disaggregated. There is no analogous distinction with respect to compliance costs and, thus, nothing in the statute that directs the EPA to partition compliance costs into direct and indirect (or ancillary) costs, or that supports the view that such a partitioning would be appropriate.

From an economic perspective, MATS was a consequential rulemaking that was expected to induce changes in both electricity and fuel markets beyond the impacts on affected coal- and oil-fired EGUs. The policy case examined in the 2011 RIA introduced the requirements of MATS as constraints on affected EGUs, which resulted in new projections of power sector outcomes under MATS. These compliance costs are an estimate of the increased expenditures in capital, fuel, labor, and other inputs by the entire power sector to comply with MATS emissions requirements, while continuing to meet a given level of electricity demand. These costs were summarized in Table 3–16 of the 2011 RIA.[30]

The commenters do not attempt to present an alternative analysis under which the EPA would assess what they term ''indirect costs.'' To focus on the projected impact of MATS on only affected entities would produce an incomplete estimate of the entire cost of complying with the rule and, thus, lead to an inappropriate consideration of the costs of the 2012 MATS Final Rule. The costs termed ''indirect costs'' by commenters are neither ancillary or incidental costs; these costs are an integral part of the compliance costs that are attributable to expected changes

[29] The **Federal Register** document for the 2012 PM NAAQS indicates that ''[i]n considering this additional population level information, the Administrator recognizes that, in general, the confidence in the magnitude and significance of an association identified in a study is strongest at and around the long-term mean concentration for the air quality distribution, as this represents the part of the distribution in which the data in any given study are generally most concentrated. She also recognizes that the degree of confidence decreases as one moves towards the lower part of the distribution.''

[30] The EPA estimated the impacts of MATS on oil-fired units and costs associated with monitoring, recordkeeping, and reporting in separate analyses, which are summarized in Chapter 3 and Appendix 3A of the 2011 RIA.

to production behavior in the sector in order to minimize the cost of complying with MATS. Furthermore, an evaluation of the costs borne solely by the owners of EGUs subject to MATS would need to account for the ability of owners of these EGUs to recoup their increased expenditures through higher electricity prices; otherwise, an estimate of the costs of MATS borne by the owners of those EGUs (*i.e.,* their economic incidence) would be an overestimate. However, if the EPA was to only account for the economic incidence for owners of EGUs, the costs borne by the consumers of electricity from these higher prices would be ignored, which the EPA finds inappropriate. Therefore, the EPA determined it was appropriate to account for all of the costs that may be incurred as a result of the rule that could be reasonably estimated, recognizing that these expenditures would ultimately be borne either by electricity consumers or electricity producers, rather than limiting our consideration of costs to just those borne by a subset of producers or consumers.

Comment: Some commenters asserted that the EPA has failed to explain how it has given any meaningful consideration in its benefit-cost comparison to the numerous health effects of reducing HAP emissions that the EPA has not quantified. A few commenters asserted that the non-monetized benefits of the rule encompass virtually all the HAP reductions that the rule yields. One commenter argued that the EPA has only given ''lip service'' to these benefits, but not any discernible weight in reaching the conclusion that regulating EGUs under CAA section 112 is not appropriate and necessary. Further, the commenter asserted that the EPA has offered no support or explanation for the assertion that the unquantified benefits are not sufficient to overcome the difference between the monetized benefits and the costs of MATS.

Response: The 2011 RIA attempted to account for all the monetized *and* unquantified benefits of the rule, and the EPA's benefit-cost analysis in the RIA does not discount the existence or importance of the unquantified benefits of reducing HAP emissions. However, in this final action, the EPA has determined that it is reasonable to evaluate unquantified benefits separately in the comparison of benefits and costs for this action under CAA section 112(n)(1)(A).

The EPA explained in the 2011 RIA that there are significant obstacles to successfully quantifying and monetizing the public health benefits from reducing HAP emissions (*see* also Gwinn, *et al.,* 2011,[31] and Fann, Wesson, and Hubbell, 2016 [32] for a detailed discussion of the complexities associated with estimating the benefits of reducing emissions of air toxics). These obstacles include gaps in toxicological data, uncertainties in extrapolating results from high-dose animal experiments and worker studies to estimate human effects at lower doses, limited monitoring data, difficulties in tracking diseases such as cancer that have long latency periods, and insufficient economic research to support the valuation of the health impacts often associated with exposure to individual HAP.

The EPA fully acknowledges the existence and importance of the unquantified benefits. The EPA explained in the 2019 Proposal reasons why the EPA has determined that the unquantified benefits are unlikely to overcome the significant difference (which, the EPA notes again, is a difference of three orders of magnitude) between the monetized HAP-specific benefits and compliance costs of the MATS rule. This is also further discussed in section II.C.2 of this preamble. As noted there, many of the HAP-related effects that were unquantified in the 2011 RIA consist of morbidity effects in humans. The EPA's methods estimating the economic value of avoided health effects values mortality effects significantly more than avoided illnesses (*e.g.,* hospital admissions, emergency department visits, cases of aggravated asthma, *etc.*).[33] Hence, valuing HAP-related morbidity outcomes would not likely result in estimated economic values similar to those attributed to avoiding premature deaths.

Commenters raised the possibility that there could be unquantified HAP-related benefits of mortality effects, based on the comments the EPA believes the most significant are associated with avoiding premature death, and in particular, potential cancer risks.[34] As part of the 2012 MATS Final Rule, the EPA modeled the maximum individual risk (MIR) associated with non-mercury HAP including arsenic, hexavalent chromium, nickel, and hydrogen chloride for a subset of 16 EGUs. MIR is the ''maximum individual risk'' experienced by the most highly exposed individual living in proximity to the source, presuming continuous exposure for 70 years. The analysis found that the one oil-fired EGU studied had a lifetime cancer risk of 20-in-1 million, and that none of the remaining 15 coal-fired EGU facilities posed a lifetime risk of cancer for the maximally exposed individual exceeding 8-in-1 million, with most facilities posing a risk of equal to, or less than, 1-in-1 million. These risks are significantly below the levels defined by the EPA as being the presumptive upper limit of acceptable risk *(i.e.,* 1-in-10 thousand). While that analysis did not separately estimate the number of new cases of HAP-attributable cancer among each year, the size of the MIR implies that the number of new cases would likely be very small. The EPA's evaluation of evidence of unquantified benefits is based on qualitative information that helps understand the likelihood and potential scale of those benefits, relative to the monetized benefits and monetized costs. These qualitative assessments help confirm that unquantified benefits do not alter the underlying conclusions that costs greatly outweigh HAP benefits.

Comment: Several commenters pointed out that the EPA's 2019 Proposal relies on undefined terms such as ''moderately commensurate,'' ''gross disparity,'' and ''significant difference,'' which are not statutory terms and do not appear in prior regulatory actions associated with MATS. Without explanation of what these terms mean, the commenters asserted that the public did not receive adequate notice so that they could provide meaningful comments on the proposal. Commenters said the 2019 Proposal leaves the public in the dark as to what data and methodology the EPA relies on to determine that the costs of regulating power plants under CAA section 112 ''grossly outweigh'' the hazardous air pollution benefits. One commenter asserted that the failure to define these terms and outline the EPA's analytical

[31] Gwinn, M.R., *et al.,* 2011. *Meeting Report: Estimating the Benefits of Reducing Hazardous Air Pollutants—Summary of 2009 Workshop and Future Considerations. Environmental Health Perspectives,* 119(1): 125–130.

[32] Fann N., Wesson K., and Hubbell B (2016), Characterizing the confluence of air pollution risks in the United States. *Air Qual Atmos Health* 9:293. Available at *https://doi.org/10.1007/s11869-015-0340-9.*

[33] *See* U.S. EPA. 2010a: *Regulatory Impact Analysis for the Nitrogen Oxide National Ambient Air Quality Standards* Page 4–8 through 4–10; U.S. EPA. 2010b: *Regulatory Impact Analysis for the Sulfur Dioxide National Ambient Air Quality Standards* Page 5–26 through 5–28; U.S. EPA. 2012: *Regulatory Impact Analysis for the Particulate Matter National Ambient Air Quality Standards* pages 5–69; U.S. EPA. 2015: *Regulatory Impact Analysis for the Ozone National Ambient Air Quality Standards.* Pages 6–57 through 6–60.

[34] *See* sections II.C.2 and II.C.4 of this preamble for the EPA's response to commenters' assertions regarding potential mortality effects due to methylmercury exposure and cardiovascular impacts.

methodology has rendered this action in violation of CAA section 307(d).

Response: The EPA believes that the language used in its 2019 Proposal and final actions is reasonable and understandable and is consistent with legal standards that have been previously upheld in litigation challenges. For example, in the *Entergy* decision the U.S. Supreme Court upheld the EPA's use of a ''wholly disproportionate'' standard. 556 U.S. at 224 (''[I]t is also not reasonable to interpret Section 1326(b) as requiring use of technology whose cost is wholly disproportionate to the environmental benefit to be gains'') (internal quotation removed). Further, as recognized in the 2016 Supplemental Finding, CAA section 112(n)(1)(A) and the *Michigan* decision give broad discretion to the Administrator to apply his expert judgment in considering cost in order to determine whether it is appropriate and necessary to regulate HAP emissions from EGUs. *See* 81 FR 24428. CAA section 112(n)(1)(A) requires that ''the Administrator shall regulate [EGUs] . . . if the Administrator finds such regulation is appropriate and necessary.'' The *Michigan* Court explicitly acknowledged the discretion held by the Administrator: ''[i]t will be up to the Agency to decide (as always, within the limits of reasonable interpretation) how to account for cost.'' 135 S. Ct. at 2711. As explained in the prior response and in other places in this preamble, the EPA has concluded, as a result of our qualitative evaluation of evidence, that unquantified benefits cannot reasonably be expected to be comparable to the cost of regulation or to meaningfully redress the gross disparity between that cost and the monetized HAP benefits. The commenters take issue with some of the terminology used in the 2019 Proposal, but given the discretion afforded to the Administrator by CAA section 112(n)(1)(A), as acknowledged by the U.S. Supreme Court, we believe this preamble outlines a reasonable and fitting approach to Congress' open-ended instruction to the Administrator to determine whether a regulation of EGUs is ''appropriate and necessary.'' The EPA further believes that, in a context where costs outweigh monetized HAP-specific benefits by three orders of magnitude, the meaning and relevance of terms such as ''gross disparity'' and ''significant difference'' are self-evident.

4. It Is Reasonable To Continue To Rely on the Original 2011 Regulatory Cost-Benefit Data Comparison as Part of a CAA Section 112(n)(1)(A) Assessment of Costs and Benefits

a. Summary of 2019 Proposal

As discussed above, in the 2016 Supplemental Finding, the EPA considered an alternative approach to considering cost as part of the appropriate and necessary finding that was based on a benefit-cost analysis originally performed as part of the 2011 RIA for the 2012 MATS Final Rule. This analysis summarized the EPA's projected estimates of annualized benefits, costs, and net benefits of the MATS rule in 2015. The 2011 RIA considered costs, quantified HAP benefits, unquantified HAP benefits, and non-HAP co-benefits and concluded that aggregated monetized benefits ($37 to $90 billion each year) exceeded the costs of compliance ($9.6 billion) by 3 to 9 times. The EPA, therefore, concluded in the 2016 Supplemental Finding's alternative approach that the RIA's benefit-cost analysis supported its affirmation of the prior appropriate and necessary finding under CAA section 112(n)(1)(A).

The 2019 Proposal also used the estimates from the 2011 RIA to address costs in the context of a CAA section 112(n)(1)(A) appropriate and necessary finding but concluded that the alternative approach in the 2016 Supplemental Finding had improperly weighed the non-HAP co-benefits estimates reported in the 2011 RIA. Specifically, the EPA concluded that the Agency's previous equal weighting of the $PM_{2.5}$ co-benefits projected to occur as a result of the reductions in HAP emissions was inappropriate given that the focus of CAA section 112(n)(1)(A) is on the HAP emissions reductions themselves. Upon reconsideration, the EPA proposed to determine that it would be illogical for the Agency to decide that regulation under CAA section 112, which is expressly designed to deal with HAP, could be justified primarily based on the non-HAP pollutant impacts of these regulations. In the 2019 Proposal, the EPA provided an updated comparison of costs and targeted pollutant benefits *(i.e.,* HAP benefits) in a memorandum to the proposed rulemaking docket.[35] The EPA used the results from the 2011 RIA for the updated comparison, as this RIA contained the best available information on the projected costs, benefits, and impacts of the MATS rule at the time the Agency was making its regulatory decision to establish CAA section 112(d) emissions standards.

b. Final Rule

The EPA is finalizing the determination outlined in the 2019 Proposal. The EPA believes that the approach to the formal benefit-cost analysis presented in the 2011 RIA contains the best available information on the projected costs, benefits, and impacts of the MATS rule at the time the Agency was making its regulatory decision to establish CAA section 112(d) emissions standards. The EPA maintains that, based upon an evaluation of the information in the record, even if the Agency were to perform new analysis to estimate the benefit and cost impacts of MATS, the results are unlikely to materially alter the general conclusions of the analysis, with small benefits associated with the targeted quantified HAP benefits and compliance costs and would not alter the final determination herein.

c. Comments and Responses

Comment: Some commenters asserted that the EPA has failed to comply with basic principles of administrative law by failing to develop an adequate factual record in basing its cost-benefit comparison on the data contained in the 2011 RIA, as opposed to gathering the body of information relevant to these issues that has since become available. These commenters asserted that any consideration of the appropriate and necessary finding must consider new information on what the benefits and costs of regulating EGUs would be if the question were revisited in light of current knowledge, not as the facts were thought to be 8 years in the past.

Response: The EPA agrees with the commenters that courts have required administrative agencies to address ''newly acquired data in a reasonable fashion,'' but depending on the circumstances, agencies are not always required to rely on updated data when engaged in decision-making. *American Iron & Steel Inst.* v. *EPA,* 115 F.3d 979, 1007 (D.C. Cir. 1997). The EPA maintains that its use of benefit and cost information from the 2011 RIA is reasonable in this context.

To determine whether an agency reasonably addressed updated data, courts may look to the statutory mandate to the Agency. *NRDC* v. *Herrington,* 786 F.2d 1355 (D.C. Cir.

[35] *See Compliance Cost, HAP Benefits, and Ancillary Co-Pollutant Benefits for ''National Emission Standards for Hazardous Air Pollutants: Coal-and Oil-Fired Electric Utility Steam Generating Units—Reconsideration of Supplemental Finding and Residual Risk and Technology Review''* (Docket ID Item No. EPA–HQ–OAR–2018–0794–0007).

1985). Under the statutory structure of CAA section 112, the CAA section 112(n)(1)(A) finding is a preliminary determination that is made significantly before the CAA section 112(d) standards would be promulgated. The suggestion by some commenters that the EPA is required to conduct a new analysis that attempts to estimate the actual costs incurred through compliance with the final CAA section 112(d) standards is, thus, not consistent with the statute. The 2016 Supplemental Finding similarly declined to conduct new analysis before reaffirming the appropriate and necessary determination, arguing that this was an appropriate approach to the problem because that determination is a threshold question under the statute. 81 FR 24432 (2016 Supplemental Finding). We also note that in 2012, the EPA interpreted CAA section 112(n)(1)(A) as not obligating the Agency to update its data, and we maintain that interpretation here. That interpretation is consistent with the text and structure of CAA section 112(n)(1)(A), which focuses on an expressly required study that evaluates hazards to public health. When the EPA reaffirmed the 2000 appropriate and necessary finding in 2012, it explained that although it was choosing to undertake an updated analysis of the public health risks associated with EGU HAP emissions, doing so was ''not required.'' 77 FR 9304, 9310 (February 16, 2012). The EPA argued at the time that the continued existence of the appropriate and necessary finding in 2012 was warranted by the analysis undertaken in 1998 and summarized in the 2000 appropriate and necessary finding. *Id.*

Both the statute and the *Michigan* decision support the EPA's reliance on the cost estimates from the 2011 RIA. First, any cost analysis included in an ''initial decision to regulate,'' *Michigan,* 135 S. Ct. at 2709, must precede any regulations flowing out of that decision. Therefore, in considering the costs of compliance as part of its appropriate and necessary finding, it is reasonable for the EPA to look at what types of cost information, such as the 2011 RIA cost estimates, would be available at this threshold stage. In addition, nothing in the *Michigan* decision precludes the EPA's use of the existing cost information in the record in addressing the Agency's obligation on remand to consider cost as part of the appropriate and necessary finding. In *Michigan,* the Court rejected arguments that it could conclude that the Agency had properly considered cost based on the Agency's consideration of costs in other stages of the rulemaking (*e.g.,* in setting the emission standards or in the RIA). The Court emphasized that the Agency itself had not relied upon these rationales at the finding stage. 135 S. Ct. 2710–11 (citing *SEC* v. *Chenery Corp.,* 318 U.S. 80, 87 (1943)). However, the Court left open the possibility that the economic analyses the Agency had already conducted could suffice to satisfy its obligation to consider costs as part of the appropriate finding. *Id.* at 2711.

There is nothing in the operative statutory language here that is akin to wording that courts have found to require an agency to incorporate updated information. *See Sierra Club* v. *EPA,* 671 F.3d 955 (9th Cir. 2012) (directing the EPA to rely on updated data when approving nonattainment state implementation plans (SIPs) because CAA section 172(c)(3) requires SIPs to include ''comprehensive, accurate, current inventory of actual emissions''); *see* also *City of Las Vegas* v. *Lujan,* 891 F.2d 927 (D.C. Cir. 1989) (holding that the Secretary of the Interior could not disregard available scientific information because the Endangered Species Act required the ''best scientific and commercial data available'').

In addition to looking at the statutory language, courts also often examine the impact any updated data would have had on the agency's decision. *Catawba County* v. *EPA,* 571 F.3d 20, 45 (D.C. Cir. 2009) (upholding the EPA's designations for the NAAQS because ''EPA dealt with the newly acquired data in a reasonable fashion by explaining why it would not have changed the designations''); *see* also *Eastern Carolinas Broadcasting* v. *FCC,* 762 F.2d 95, 98 (D.C. Cir. 1985) (upholding FCC's determination in light of the Commission's failure to utilize updated data because it was a ''harmless error in light of the ultimate rationale'').

According to the commenters, costs of MATS compliance have been lower than the EPA estimated in 2011 and the EPA has not accounted for more recent studies of quantified HAP benefits. However, even if the EPA updated its analysis, there is no reason to believe that the new data and analysis would change the overall conclusion of the 2011 analysis that costs outweighed the quantified benefit attributed to reduction in HAP emissions.

However, while it is challenging to produce rigorous retrospective estimates of the benefits and costs of MATS, it is possible to demonstrate, using publicly available information, that there is no reason to believe that the relative difference between compliance costs and quantified HAP benefits projected in the 2011 RIA ($9.6 billion versus $4 to $6 million annually in 2015) would be materially different under any re-analysis.[36] Several commenters pointed to independent analyses that provided three estimates of the actual costs of MATS. While none of these estimates can be precisely compared against the EPA *ex ante* estimates because they use different cost metrics and dollar years, the independent analyses indicate that, if actual costs were to be estimated in a manner consistent with the EPA's 2011 RIA estimates, the compliance costs expenditures would still likely be in the billions of dollars.

First, a 2015 analysis by Andover Technology Partners referred to by commenters estimated that the actual cost of compliance in the initial years of implementation was approximately $2 billion per year.[37] [38] The second study referred to by commenters was a study performed by M.J. Bradley & Associates (MJB&A) using information from the U.S. Energy Information Administration.[39] MJB&A estimated that MATS-regulated facilities incurred total capital expenditures on environmental retrofits of $4.45 billion, an estimate that does not include ongoing operating and maintenance expenditures. Finally, as documented in a letter to the EPA and cited by several commenters, the Edison Electric Institute estimated that the power sector incurred total compliance costs of more than $18 billion, including both capital and

[36] The EPA's April 15, 2020, finalization of the subcategorization of Eastern Bituminous Coal Refuse-Fired EGUs could alter the benefits and costs of MATS. However, given that such subcategorization will affect only six units, we think it is reasonable to expect that any changes to the 2011 RIA's projected cost and benefits as a result of the potential subcategorization would not materially affect the EPA's conclusion that compliance costs of MATS disproportionately outweigh the HAP benefits associated with the standards.

[37] Declaration of James E. Staudt, Ph.D., CFA, at 3, *White Stallion Energy Center* v. *EPA,* No. 12–1100 (D.C. Cir., December 24, 2015). Also available at Docket ID Item No. EPA–HQ–OAR–2009–0234–20549.

[38] In addition to the 2015 study, Andover Technology Partners produced two other analyses in 2017 and 2019, respectively, that estimated the ongoing costs of MATS. The 2017 report estimated that the total annual operating cost for MATS-related environmental controls was about $620 million, an estimate that does not include ongoing payments for installed environmental capital. The 2019 report estimates the total annual ongoing incremental costs of MATS to be about $200 million; again, this estimate does not include ongoing MATS-related capital payment. The 2017 report is available in Docket ID Item No. EPA–HQ–OAR–2018–0794–0794. The 2019 report is available in Docket ID Item No. EPA–HQ–OAR–2018–0794–1175.

[39] Available in Docket ID Item No. EPA–HQ–OAR–2018–0794–1145.

operations and maintenance costs.[40] While these retrospective cost estimates are developed from bases that are dissimilar from one another and, in particular, from how the EPA developed the prospective cost estimates in the 2011 RIA, it is evident that the independent analyses each indicate that the industry costs of MATS are of a similar order of magnitude and in the billions of dollars.

At the same time, the quantified mercury-related benefits would still likely be in the millions of dollars and not substantially more than what was estimated when the rule was finalized. Table 3–4 of the 2011 RIA shows that the EPA estimated that MATS would reduce mercury emissions from MATS-regulated units about 20 tons in 2015 (from 27 to 7 tons). According to recent EPA estimates, mercury emissions from MATS-regulated units decreased by about 25 tons from 2010 (pre-MATS) to 2017 (from 29 to 4 tons).[41] Even if the 25-ton decrease in mercury emissions from 2010 to 2017 is entirely attributed to MATS (which would be a very strong assumption given other economic and regulatory factors that influenced the trajectory of mercury emissions downward during this period), the quantified mercury-related benefits are likely to be not much greater than the estimates in the 2011 RIA, and certainly would continue to be at least an order of magnitude smaller than the actual costs of MATS.

Similarly, as discussed in more detail in sections II.C.2 and II.C.3 of this preamble, we would expect that the unquantified HAP-related benefits of MATS would not meaningfully redress the large disparity between monetized costs and monetized HAP benefits estimated in the 2011 RIA. Lastly, whether the co-benefits that MATS achieved are larger or smaller than estimated in the 2011 RIA is not a central consideration in the EPA's appropriate and necessary finding, as discussed previously in section II.C.3 of this preamble.[42] The net result of this inquiry is that we believe that if the EPA were to perform retrospective analysis of the impacts of MATS for the purposes of the appropriate and necessary determination, the results of that analysis would not lead to any material change in the relative magnitude of costs and HAP-related benefits. In satisfaction of the requirements of OMB's Circular A–4, Section 3 of the memorandum, *Compliance Cost, HAP Benefits, and Ancillary Co-Pollutant Benefits,* that accompanies this final action presents all reasonably anticipated costs and benefits arising out of the MATS rule, including those arising out of co-benefits.

Comment: Commenters said that the compliance cost estimates underlying the 2019 Proposal are several times higher than actual costs because the projections in the 2011 RIA assumed that MATS would require the installation of additional fabric filters, scrubber upgrades, and electrostatic precipitator upgrades that were subsequently not required. Additionally, the commenters suggested the EPA's analysis erred because the projected price of natural gas was too low in the 2011 RIA. Commenters said that what they characterized as substantial inaccuracies of the 2011 RIA projections render these projections an inappropriate basis for the proposed comparison of the costs and benefits.

Response: The EPA disagrees with the commenters that the entire economic analysis that the EPA performed in the 2011 RIA is invalid simply because of an asserted discrepancy between modeling projections and actual outcomes. *See, e.g., EME Homer City Generation, L.P.* v. *EPA,* 795 F.3d 118, 135–36 (D.C. Cir. 2015) (''We will not invalidate EPA's predictions solely because there might be discrepancies between those predictions and the real world. That possibility is inherent in the enterprise of prediction. The best model might predict that the Nationals will win the World Series in 2015. If that does not happen, you can't necessarily fault the model.''). The EPA used the best available data and modeling information, in accordance with Executive Order 12866 and the EPA's economic guidelines, and provided the public with the opportunity to comment on all aspects of its analysis in developing the 2011 RIA.

The independent analyses cited by several commenters find that a variety of control technology costs have shown to be lower than the EPA's projection from the 2011 RIA. However, the suggestion that important components of the actual compliance cost of MATS are lower than the Agency's projections does not alter the Agency's determination that the analysis in the 2011 RIA represents the best and most comprehensive estimate of the cost of compliance with MATS available to the EPA for use in this finding, because it was developed at the time when the Agency reaffirmed the appropriate and necessary finding and established CAA section 112(d) standards for EGUs. Additionally, as discussed in another comment response in this section, even if actual compliance costs are lower than the EPA projected in the 2011 RIA, the costs are still likely to be at least an order of magnitude greater than the monetized HAP benefits.

Comment: Other commenters rejected the argument that actual utility sector compliance costs for MATS have been less than predicted in 2011. One commenter said that utilities have spent less on retrofitting power plants by simply closing plants to avoid installing costly controls. However, the commenter also claimed that the utility sector's avoided MATS compliance costs did not simply disappear; they were translated into costs borne by the former employees of retired coal-fired plants, by coal workers who have lost their jobs, and by the communities of those displaced workers. Commenters said that the 2019 Proposal continues to treat these MATS-driven ''costs'' as irrelevant when considering the regulatory impacts, but the commenters said that the EPA must add these regulatory costs to its analysis as required by *Michigan.* The commenter cited data indicating an individual's job loss has a direct correlation with adverse health outcomes.

Response: The 2011 RIA provided estimates of employment changes for the regulated power sector and for the air pollution control sector, including estimates of employment impacts from changes in fuel demand from EGUs. However, examining localized employment impacts that may arise from MATS compliance actions is outside of the scope of this action. The commenter asserts that the cost of the rule will result in lost income or employment that will, in turn, result in negative health impacts. The EPA disagrees that this point is relevant to the appropriate and necessary finding.

Comment: Commenters highlighted that the industry has already incurred costs to implement MATS and cannot recover these costs except through rate recovery and similar mechanisms. Commenters argued that finalization of a reconsideration of the appropriate and necessary finding under CAA section 112(n)(1)(A) should be based on an analysis of ongoing and future costs weighed against ongoing and future benefits, as opposed to considering past costs and benefits. If the EPA considers past costs that have already been incurred by the industry to comply with MATS in connection with the proposed

[40] Available in Docket ID Item No. EPA–HQ–OAR–2018–0794–2267.

[41] *https://www3.epa.gov/airmarkets/progress/reports/index.html.*

[42] As previously discussed, section 112(n) of the CAA requires the EPA to make a finding as to whether regulation of EGUs is ''appropriate and necessary'' following consideration of hazards to public health reasonably anticipated to result from EGU emissions of HAP listed in CAA section 112(b).

rule, the Agency must consider whether those past costs might weigh in favor of maintaining or affirming the 2016 Supplemental Finding.

Response: A previous response in this section explains why the EPA's use of the benefit and cost estimates from the 2011 RIA is reasonable. Additionally, with respect to the suggestion that the EPA estimate future costs and benefits flowing from this action, section II.D of this preamble explains that the EPA's revised determination that regulation of HAP emissions from EGUs under CAA section 112 is not appropriate and necessary will not remove EGUs from the CAA section 112(c) list of sources, and the previously established MATS rule will remain in place. As a result, there will be no changes in future compliance expenditures or emissions under MATS as a result of the revised determination under CAA section 112(n)(1)(A).

Comment: Commenters said that many utilities that expended resources to comply with MATS are subject to ongoing rate reviews by public utility commissions regarding recovery of MATS-associated costs. Some utilities expressed concerns that, if MATS or the appropriate and necessary finding is rescinded, whether through EPA action or as a result of judicial review of a reversal of the 2016 Supplemental Finding, stakeholders will intervene in rate cases before public utility commissions, arguing that utilities' investments in the MATS-required pollution controls were imprudent and should no longer be recoverable through their approved rates. Because of this reasoning, the commenters said the EPA should consider the impacts on recovery of sunk costs jeopardized by a reversal of the appropriate and necessary finding in its benefit-cost analysis.

Response: Section II.D of this preamble explains that the EPA's revised determination that regulation of EGUs under CAA section 112 is not appropriate and necessary will not remove EGUs from the CAA section 112(c) list of sources, and the previously established MATS rule will remain in place. As a result, the EPA does not anticipate that the ability of utilities to recover MATS-related expenditures will be jeopardized as a result of this action. Even if MATS were to be rescinded, a number of states have mercury rules that would continue to mandate the use of mercury controls. The EPA is committed to working with states that are interested in developing their own HAP-specific requirements. The EPA's proposal noted that, in 2011, the Utility Air Regulatory Group (UARG) submitted a petition pursuant to CAA section 112(c)(9) requesting that coal-fired EGUs be removed from the CAA section 112(c) List of Categories of Major and Area Sources, and that the EPA denied this petition on several grounds.[43] The EPA's position on denial of this petition has not changed.

Comment: Commenters stated that since the revised consideration of weighing costs and benefits as part of a CAA section 112(n)(1)(A) finding hinges on the estimation of HAP reduction benefits, the EPA must make a better effort to monetize all HAP reduction benefits. These commenters asserted that new research suggests that the EPA underestimated the benefits associated with HAP reductions across several effects. Specific criticisms of the EPA HAP benefit estimation focused primarily on methylmercury[44] and included: (1) Failure to quantify cardiovascular effects; (2) criticism of the approach used in modeling the IQ loss endpoint; (3) failure to consider other neurological endpoints besides IQ loss; (4) failure to consider additional health effects besides neurological and cardiovascular impacts; and (5) failure to model the full range of fish consumption pathways related to mercury emissions from EGUs.

Response: After reviewing the additional peer-reviewed studies on health effects attributable to mercury that were submitted in the comments, the EPA concludes that the approach to assessing quantified and unquantified methylmercury benefits in the 2011 RIA, while subject to uncertainty, remains valid. We address the major criticisms across the five major categories of comments below.

i. Failure To Quantify Cardiovascular Effects

Commenters cited several studies regarding the linkage between methylmercury concentrations in blood and tissue samples and cardiovascular health. Some of the studies cited in the comments were available to the EPA at the time of the 2011 RIA, while others were not. The former category includes Rice *et al.* (2010)[45] and Roman *et al.* (2011)[46] which characterize methylmercury-related effects. These two articles concluded that methylmercury is both directly linked to acute myocardial infarction and intermediary impacts that contribute to myocardial infarction risk. They also discussed a host of uncertainties associated with methylmercury cardiovascular effects.

Rice *et al.* (2010) evaluated the benefits of a 10-percent reduction in methylmercury exposure for U.S. populations (reflecting IQ loss and presumed mortality impacts). The study used a probabilistic approach to address confidence in a causal association between methylmercury and heart attacks. Importantly, they state ''we view the evidence for causal interpretation as relatively weak.'' They use a subjectively defined probability of one-third that the association between methylmercury and cardiovascular effects is causal, acknowledging that the strength of the association was ''modest.'' The Rice *et al.* (2010) estimates are also sensitive to assumptions regarding the coefficient linking hair mercury to heart attack and the timing of the exposure-response relationship.

The Roman *et al.* (2011) paper was a workshop report from a panel convened to assess the potential for developing a concentration-response function for the cardiovascular effect from methylmercury exposure. The report recommended that the EPA develop a new dose-response relationship for cardiovascular-related methylmercury effects. However, the study also reports the results of a literature review that yield a very small number of in vitro or animal studies; the review characterized the strength of the epidemiological studies that assessed clinically significant endpoints as being ''moderate.'' The Roman *et al.* (2011) review also mentions uncertainty as to which exposure metric (including the timing of exposure and appropriate bio-marker) would provide the most robust statistical outcome in modeling cardiovascular effects.

In the 2012 MATS Final Rule, the EPA also addressed comments on the linkage between methylmercury exposure and cardiovascular effects. One of the references cited as part of the EPA response was Mozaffarian *et al.*

[43] 84 FR 2679–2680.

[44] Additional comments also addressed the modeling of non-mercury HAP in the context of the appropriate and necessary risk assessment (as opposed to the benefits analysis), with these comments focusing on claims that EPA had failed to appropriately include adjustment factors addressing individual-variability and limitations in using the census block-centroid approach to capturing risk for the most exposed individual. These comments are addressed in the RTC document.

[45] Rice, G.E., *et al.* (2010). *A Probabilistic Characterization of the Health Benefits of Reducing Methyl Mercury Intake in the United States.* Environmental Science & Technology, 44(13): 5216–5224.

[46] Roman, H.A., *et al.* (2011). *Evaluation of the cardiovascular effects of methylmercury exposures: Current evidence supports development of a dose-response function for regulatory benefits analysis.* Environmental Health Perspectives, 119(5): 607–614.

(2011), which evaluated health outcomes from two large cohorts of men and women in the U.S. and showed no evidence of a relationship between mercury exposure and increased cardiovascular disease risk.[47] This study also evaluated multiple coronary heart disease subtypes and concluded that mercury exposure was not associated with the risk of nonfatal myocardial infarction or fatal coronary heart disease. Based on the available scientific literature at the time of the MATS rule, the Agency concluded that there was inconsistency among available studies as to the association between methylmercury exposure and various cardiovascular system effects.

In the second category of newer literature, commenters referenced the Genchi *et al.* (2017)[48] review article that summarizes the methylmercury-cardiovascular literature but does not report dose-response parameters. The paper cites studies from 2002–2007 looking at cardiovascular-related effects (*e.g.,* heart rate variability, myocardial infarction, atherosclerosis, hypertension, *etc.*) for a range of populations, some U.S. and some non-U.S. The article recommends development of a dose-response function for methylmercury exposure and myocardial infarctions for regulatory benefits analysis, but does not provide specific recommendations regarding which studies, effect estimates or functional forms to use. The authors also acknowledge the need ''to improve the characterization of the potential linkage between methylmercury exposure and the risk of cardiovascular disease.'' Commenters also cited Giang and Selin (2016)[49] as support for their argument that the monetized benefits of reducing mercury is greater than the EPA estimates in the proposal. This study also acknowledges that the relevant literature (through 2016) is relatively small and inconsistent with respect to the association between methylmercury exposure and cardiovascular disease. The study notes that all of the literature discusses the challenges associated with teasing out any adverse effects of methylmercury exposure through fish consumption in the midst of the positive cardiovascular impacts associated with fish consumption. However, based on the information available in the existing record and material submitted during the public comment period, the EPA believes available evidence does not support a clear characterization of the potential relationship between mercury exposure and cardiovascular effects at this time. This does not preclude the possibility that later scientific work may provide more clarity as to the existence or absence of an association.

Further, current research is also insufficient to support modeling of the cardiovascular mortality endpoint with a sufficient degree of confidence for inclusion in an EPA benefits analysis due to (1) questions regarding overall causality and uncertainty in specifying the dose-response relationship required (including the form and parameterization of the function) and (2) uncertainty in modeling the prospective bio-markers (*e.g.,* hair mercury) required in part due to questions regarding the temporal aspects of the exposure-response relationship.

ii. Criticism of the Approach Used in Modeling the IQ Loss Endpoint

The second category of criticism related to the 2011 RIA estimation of benefits involves the approach used in modeling IQ loss, specifically the effect estimate used in modeling this endpoint. Commenters pointed out that in modeling IQ loss, two studies, Bellanger *et al.* (2013)[50] and Trasande *et al.* (2005),[51] employ effect estimates significantly larger than the effect estimate utilized by the EPA in the 2011 RIA, which was obtained from Axelrad *et al.* (2007).[52] In responding to these comments, the EPA notes that both of these alternate studies (Bellanger *et al.,* 2013 and Trasande *et al.,* 2005) utilized data from one of the three key datasets (Faroes study) in characterizing the relationship between methylmercury exposure and IQ loss. By contrast, Axelrad *et al.* (2007) uses data from all three key studies (Faroes, Seychelles, and New Zealand) in fitting their function. In addition, Axelrad *et al.* (2007) also obtained a new modeled estimate for IQ loss for the Faroes data from the study authors based on structural equation modeling involving underlying neurological endpoints. And finally, Axelrad *et al.* (2007) also used a sophisticated hierarchical random-effects model that can consider study-to-study and endpoint-to-endpoint variability in modeling the endpoint. When considered in aggregate, these details regarding study design associated with Axelrad *et al.* (2007) lead the EPA to conclude that the effect estimate obtained from this particular study is well supported by the underlying evidence and continues to be appropriate for modeling IQ loss benefits related to methylmercury exposure.

iii. Failure To Consider Other Neurological Endpoints Besides IQ Loss

The third broad category of criticism related to the 2011 RIA estimation of benefits was that the EPA failed to consider other neurological endpoints besides IQ loss in modeling benefits. Specifically, commenters asserted that pre-existing literature[53] and more recent data have revealed a suite of more sensitive neurodevelopmental effects than IQ loss. For example, one recent study (Patel *et al.,* 2019)[54] referenced in the comments suggests an association between methylmercury exposure and behavioral problems (specifically anxiety), even at relatively low prenatal exposure levels. Another study, Masley *et al.* (2012)[55] cited by commenters concludes that cognitive effects of methylmercury on adults are substantial enough to negate beneficial effects of omega-3 fatty acids among adults who consume large amounts of some types of fish. Finally, commenters pointed to new research (Julvez *et al.,* 2013)[56] which suggests that some individuals might be genetically susceptible to the neurological effects of methylmercury and that null groups which do not include these individuals could mask significant impacts among

[47] Mozaffarian, D.; Shi, P.; Morris, J.S.; Spiegelman, D.; Grandjean, P.; Siscovick, D.S.; Willett, W.C.; Rimm, E.B. *Mercury exposure and risk of cardiovascular disease in two U.S. cohorts.* N Engl J Med, 2011, 364, 1116–1125.

[48] Genchi, G.; Sinicropi, M.S.; Carocci, A.; Lauria, G.; Catalano, A. *Mercury Exposure and Heart Diseases.* Int. J. Environ. Res. Public Health, 2017, 14, 74. *https://doi.org/10.3390/ijerph14010074.*

[49] Giang, A.; Selin, N. *Benefits of mercury controls for the United States.* Proceedings of the National Academy of Sciences, Vol 113, No. 2, January 12, 2016. *https://doi.org/10.1073/pnas.1514395113.*

[50] Bellanger, D., *et al.* (23 authors), *Economic benefits of methylmercury exposure control in Europe: Monetary value of neurotoxicity prevention.* Environmental Health, 2013, 12:3.

[51] Trasande, L.; Landrigan, P.; Schechter, C. *Public Health and Economic Consequences of Methyl Mercury Toxicity to the Developing Brain.* Environmental Health Perspectives, Vol 113, No 5, May 2005. *https://doi.org/10.1289/ehp.7743.*

[52] Axelrad, D.; Bellinger, D.; Ryan, L.; Woodruff, T. *Dose-Response relationship of Prenatal Mercury Exposure and IQ: An Integrative Analysis of Epidemiologic Data.* Environmental Health Perspectives, Vol 115, No 4, April 2007.

[53] National Research Council, *The Toxicological Effects of Methylmercury,* 2000. *https://www.nap.edu/catalog/9899/toxicological-effects-of-methylmercury,* p. 310.

[54] Patel, N.B.; Xu, Y.; McCandless, L.C.; Chen, A.; Yolton, K.; Braun, J.; . . . Lanphear, B.P. (2019). *Very low-level prenatal mercury exposure and behaviors in children: The HOME Study.* Environmental health: A global access science source, 18(1), 4. doi:10.1186/s12940-018-0443-5.

[55] Masley, S.C.; Masley, L.V.; Gualtieri, T.: *Effect of mercury levels & seafood intake on cognitive function in middle-aged adults.* Integrative Medicine, 11:32–40, 2012.

[56] Julvez, J. and Grandjean, P. *Genetic susceptibility to methylmercury developmental neurotoxicity matters.* Front Genet, 4: 278, 2013.

genetically susceptible within the larger study group.

Taking these comments in order, regarding the potential for modeling additional neurological endpoints, including behavioral problems (*e.g.,* anxiety), the EPA notes that the cited study (Patel *et al.,* 2019) is equivocal in its findings, with the authors stating that they ''did not find a consistent association between very low-level prenatal mercury exposure and behavior problem scores in children, but [they] did find some evidence of an association between very low-level mercury exposure during early pregnancy and parent-reported anxiety scores in children.'' The authors note that the association of low-level mercury exposure with behavioral problems, including anxiety, deserves further scrutiny. The EPA concludes that we are not yet at the point where we can reliably model the effects of low-level mercury exposure on children's behavior, including anxiety.

Regarding the potential for the beneficial cognitive effects of omega-3 fatty acids in adults (resulting from fish consumption) to be partially negated by coexistent methylmercury exposure, the EPA recognizes conceptually that this could occur. However, it is important to note that the effects of methylmercury on omega-3 fatty acid intake and associated benefits were seen only for the subset of the population with relatively elevated consumption of larger fish (*i.e.,* more than 3–4 servings a month, Masley *et al.,* 2012). Modeling benefits-related changes in fish consumption typically focuses on the general consumer rather than attempting to model benefits for a specific subset of that population which can be challenging to enumerate (*i.e.,* the subgroup of those consuming relatively elevated levels of higher-trophic level fish)—that level of more refined subgroup modeling is often reserved for scenario-based risk assessments, where population enumeration is not the focus. For that reason, data on how methylmercury could obscure the benefits of omega-3 fatty acid intake (for a specific higher large-fish-consuming segment of the population) would have less utility in the context of a benefits analysis aimed at the more generalized fish-consuming population. In addition, the EPA would note potential challenges in modeling this kind of trade-off related to fish consumption, since not only would levels of methylmercury and omega-3 fatty acids need to be characterized for a broad range of fish species; in addition, the specific mix of those types of fish consumed by the high-consuming study population would need to be specified in order to increase overall confidence in modeling cognitive-related benefits at the representative population-level for this subgroup.

Regarding the potential that certain individuals could be genetically susceptible to the neurological effects of methylmercury and that, consequently, these individuals may not be fully covered by existing studies characterizing neurodevelopmental effects of methylmercury, the EPA acknowledges this as a possibility. However, the study cited by commenters (Julvez *et al.,* 2013) does not provide effect estimates for these potentially at-risk subgroups, which prevents quantitative analysis of risk and associated dollar-benefits associated with mercury-exposure in these subgroups.

iv. Failure To Consider Additional Health Effects Besides Neurological and Cardiovascular Impacts

Commenters pointed to the potential for methylmercury exposure to be associated with a range of additional adverse health effects (besides neurological and cardiovascular), including cancer (leukemia and liver) and possible effects on the reproductive, hematological, endocrine (diabetes), and immune systems. The EPA notes the distinction between evidence-based support for specific health effects (potentially even including support for causal associations should it exist) and the ability to reliably model those health endpoints quantitatively. In referencing the above health endpoints, commenters referred to a range of study data which can be used as evidence for an association, including elucidation of potential toxicity pathways.

In response to these comments, the EPA notes that in order to model a health effect within a defined population as part of a benefits analysis, high-confidence concentration-response functions linked to clearly defined biometrics (which can themselves be simulated at the population-exposure level) are required. At this time, as noted earlier, with the exception of IQ loss in children, the EPA does not believe research is currently sufficient to support quantitative assessment of any of these additional endpoints in the context of a benefits analysis involving mercury (accessed through a fish-consumption pathway).

v. Failure To Model the Full Range of Fish Consumption Pathways Related to Mercury Emissions From EGUs

A number of commenters stated that the EPA underestimated IQ-related benefits by focusing the benefits analysis on self-caught (recreational) freshwater fish. Specifically, commenters pointed to Trasande *et al.* (2005) as an example of an assessment that, while also modeling benefits associated with controlling mercury emissions from U.S. power plants, more fully considers exposure to methylmercury, including the general consumption of commercial fish by the U.S. population. The Trasande *et al.* (2005) study employs general linear apportionment (based on estimates of U.S. EGU emissions relative to global emissions) to estimate the fraction of methylmercury in U.S. freshwater and coastal fish associated with U.S. EGU emissions. A similar calculation is used to estimate the fraction of methylmercury in non-U.S. sourced commercial fish associated with U.S. EGU emissions. They then apportion their estimate of total IQ loss for children in the U.S. (assumed to come completely from fish consumption) to U.S. EGU-sourced mercury versus other sources. Similarly, commenters have also cited Giang and Selin (2016) as another example of a study that attempts to generate a more complete picture of methylmercury benefits associated with controlling U.S. EGU mercury emissions, including exposures associated with commercial fish consumption. Notably, the Giang *et al.* (2016) study uses a more sophisticated modeling approach (compared with Trasande *et al.,* 2005), to project potential benefits associated with MATS within the United States out to 2050, including application of global mercury deposition modeling covering specific regions associated with commercial fishing. The authors note that greater than 90 percent of U.S. commercial fish consumption, and the majority of U.S. mercury intake, comes from marine and estuarine sources, particularly from the Pacific and Atlantic Ocean basins. Regarding the assertion that the EPA should have used methodologies similar to those cited in these studies to incorporate consideration of commercial fish consumption (linked to U.S. EGU mercury emissions) in its benefits analysis, the EPA again reiterates the importance of including only those consumption pathways that can be modeled with a reasonable degree of confidence. Both of the studies cited employ broad-scale simplifying assumptions in order to link changes in U.S. EGU mercury emissions to potential changes in the concentration of methylmercury in commercial fish, which Giang *et al.* (2016) suggest is responsible for the vast majority of fish-

related methylmercury exposure in the U.S. Specifically, as noted earlier, the Trasande *et al.* (2005) study links U.S. EGU emissions (as a fraction of total global emissions) to methylmercury concentrations in commercially and recreational fish consumed by the U.S. population. With the Giang *et al.* (2016) study, the authors utilize U.S. EGU deposition (as a fraction of total) in specific broad fishing regions (*e.g.,* Atlantic) to estimate the fraction of methylmercury in commercially sourced fish caught in those broad regions attributable to U.S. EGUs. Both of these simplifying assumptions mask the potential complexity associated with linking U.S. EGU-sourced mercury to methylmercury concentrations in these commercial fish species. In particular, a larger region such as the Atlantic likely displays smaller-scale variation in critical factors such as fish species habitat/location, patterns of mercury deposition, and factors related to the methylation of mercury and associated bioaccumulation/biomagnification. In developing these kinds of more sophisticated models aimed at factoring commercial fish consumption into a benefits analysis involving U.S. EGU mercury, additional analyses could be needed to understand this critical element of spatial scale and the generalizing assumptions used by these authors in linking mercury emissions and deposition to commercial fish. Note that in the EPA's benefits analysis completed for MATS, one reason focus was placed on the freshwater angler scenario was increased confidence in modeling this exposure pathway given our ability to link patterns of U.S. EGU mercury deposition (relative to total deposition) over specific watersheds to sampled fish tissue concentrations in those same watersheds. This degree of refined spatial precision in linking U.S. EGU deposition to actual measured fish tissue data increased overall confidence in modeling benefits associated with this pathway, leading us to focus on the recreational angler exposure pathway.

D. Effects of This Reversal of the Supplemental Finding

1. Summary of 2019 Proposal

In the 2019 Proposal, the EPA proposed to conclude that finalizing a revision to the 2016 Supplemental Finding to determine that it is not appropriate and necessary to regulate HAP emissions from coal- and oil-fired EGUs would not lead to the removal of that source category from the CAA section 112(c)(1) list, nor would it affect the CAA section 112(d) standards established in the MATS rule.

As described in section II.B of this preamble, in 2005, the EPA reversed the 2000 determination that regulation of HAP emissions from EGUs under CAA section 112 was appropriate and necessary. At that time, the EPA justified its decision to delist EGUs because it ''reasonably interprets section 112(n)(1)(A) as providing it authority to remove coal- and oil-fired units from the section 112(c) list at any time that it makes a negative appropriate and necessary finding under the section.'' 70 FR 16032. In the 2005 Delisting Rule, the EPA ''identified errors in the prior [2000] finding and determined that the finding lacked foundation.'' 70 FR 16032. Because the EPA concluded the 2000 Finding had been in error at the time of listing, the Agency asserted that coal- and oil-fired EGUs ''should never have been listed under section 112(c) and therefore the criteria of section 112(c)(9) do not apply'' in removing the source category from the list. *Id.* at 16033. Therefore, the EPA stated that it had ''inherent authority under the CAA to revise [the listing] at any time based on either identified errors in the December 2000 finding or on new information that bears upon that finding.'' *Id.* at 16033.

The D.C. Circuit rejected the EPA's interpretations, holding that the Agency did not have authority to remove source categories from the CAA section 112(c) list based only on a revised CAA section 112(n)(1)(A) negative appropriate and necessary finding. The Court held that the CAA unambiguously requires the EPA to demonstrate that the delisting criteria in CAA section 112(c)(9) have been met before ''any'' source category can be removed from the CAA section 112(c)(1) list. *New Jersey,* 517 F.3d at 582. The D.C. Circuit specified that, under the plain text of the CAA, ''the only way the EPA could remove EGUs from the section 112(c)(1) list'' was to satisfy those criteria. *Id.* The Court expressly rejected the EPA's argument that, ''[l]ogically, if EPA makes a determination under section 112(n)(1)(A) that power plants should not be regulated at all under section 112 . . . [then] this determination *ipso facto* must result in removal of power plants from the section 112(c) list.'' *Id.* (quoting the EPA's brief). Instead, the Court maintained that CAA section 112(n)(1) governed only how the Administrator determines whether to list EGUs, and that the EPA's authority to remove a source category from the list, even for EGUs, must be exercised only in accordance with the requirements of CAA section 112(c)(9). Accordingly, the Court vacated the 2005 Delisting Rule.

Based on the D.C. Circuit's holding in *New Jersey,* the EPA proposed that finalization of the reversal of the 2016 Supplemental Finding, much like the 2005 Delisting Rule's reversal of the 2000 appropriate and necessary determination, would not have the effect of removing the Coal- and Oil-Fired EGU source category from the CAA section 112(c)(1) list because the EPA had not met the statutorily required CAA section 112(c)(9) delisting criteria. Because coal- and oil-fired EGUs would remain on the CAA section 112(c)(1) source category list, the EPA proposed to conclude that the CAA section 112(d) standards for that category, as promulgated in the MATS rule, would be unaffected by the proposal if finalized.

In the proposal, the EPA requested comment on two alternative interpretations of the *New Jersey* holding. The first alternative interpretation probed whether the *New Jersey* decision does not apply because the facts of the current situation are distinguishable from the underlying facts of that case. Specifically, the EPA requested comment on the view that *New Jersey* would not apply because the proposed reversal of the 2016 Supplemental Finding is a continuation of the Agency's response to the U.S. Supreme Court's remand in *Michigan.* Under this view, the Agency could rescind MATS without demonstrating that the CAA section 112(c)(9) criteria had been met because *New Jersey* did not address the situation in which the Agency was revising its CAA section 112(n)(1)(A) determination in response to a U.S. Supreme Court decision. The second alternative interpretation solicited comment on whether the EPA would have the authority to rescind the standards regulating HAP emissions under CAA section 112(d) in light of the fact that CAA section 112(n)(1)(A) plainly requires that the Administrator must find that regulation under CAA section 112 is appropriate and necessary as a prerequisite to undertaking such regulation. Under this theory, EGUs would remain on the CAA section 112(c) list, but would not be subject to CAA section 112(d) standards, because *New Jersey* did not address the question of whether, in the absence of a valid and affirmative appropriate and necessary finding, the EPA must regulate EGUs for HAP. For both alternative interpretations, the EPA solicited comment on whether the Agency had the discretion to follow an alternative or was, in fact, obligated to pursue an alternative interpretation.

2. Final Rule

After considering comments submitted in response to the EPA's 2019 Proposal, we are concluding that the current action to reverse the 2016 Supplemental Finding would not affect the CAA section 112(c) listing of EGUs or the CAA section 112(d) regulations. The situation here is essentially indistinguishable to that in the *New Jersey* case, and, therefore, in the absence of the CAA section 112(c)(9) delisting criteria being satisfied, coal- and oil-fired EGUs necessarily remain on the list of regulated sources, and the CAA section 112(d) standards promulgated in the MATS rule necessarily remain in place. The EPA did not propose a delisting analysis, and the EPA does not intend to examine the delisting criteria for the Coal- and Oil-Fired EGU source category. Moreover, as noted in the proposal, the results of the CAA section 112(f)(2) residual risk review conducted as part of this final action indicate that with the MATS rule in place, the estimated inhalation cancer risk to the individual most exposed to actual emissions from the source category is 9-in-1-million, which would not satisfy the requirements for delisting as specified in CAA section 112(c)(9).[57]

3. Comments and Responses

Comment: Some commenters argued that the EPA must rescind MATS if the Agency finalizes a determination that regulation under CAA section 112(n)(1)(A) is not appropriate and necessary. The commenters cited the finding in *Michigan* which held that ''EPA interpreted [section 112(n)(1)(A)] unreasonably when it deemed cost irrelevant to the decision to regulate power plants'' and asserted that if the EPA now concludes that, based on a proper evaluation of costs, regulation of EGUs under CAA section 112 is not appropriate and necessary, then either the CAA section 112(c) listing, the MATS rule, or both must be invalidated. The commenters argued that, after the finalization of the proposal, there is no valid appropriate and necessary determination, which was the basis for the EPA's listing of the Coal- and Oil-Fired EGU source category. The commenters also argued that under the plain meaning of the statutory text, Congress' intention is clear that if the EPA determines that regulation of EGU emissions under CAA section 112 is not ''appropriate and necessary,'' then the EPA lacks jurisdiction to regulate such emissions. One commenter asserted that the EPA's proposal to continue to enforce MATS while simultaneously rejecting the factual and statutory basis for the rule, offends the rule of law.

The commenters argued that the EPA's reliance on the *New Jersey* decision is misplaced because the regulatory landscape presented in this action is fundamentally different than what was assessed by the D.C. Circuit in *New Jersey.* According to the commenters, the *New Jersey* decision only addressed the EPA's authority to delist based on the reversal of an appropriate and necessary finding presumed to be legally valid, which is a fact pattern not present in this action given the *Michigan* holding. One commenter argued that because the EPA had not yet issued any EGU HAP standards under CAA section 112(d) at the time of *New Jersey,* the EPA's interpretation of its regulatory jurisdiction under CAA section 112(n) had not been subject to judicial review and the *New Jersey* decision, therefore, does not speak to whether the EPA has authority to rescind a CAA section 112(d) standard after reversing the appropriate and necessary finding. One commenter further argued that to the extent the EPA views its legal authority regarding continued enforcement of MATS to be ambiguous, it would be arbitrary and capricious for the EPA to voluntarily leave MATS in place.

Conversely, there were many commenters who agreed with the EPA's proposed approach to leave the MATS rule in place. These commenters agreed that the situation here is identical to what was adjudicated in *New Jersey;* that is, in both cases (1) the EPA had reversed an earlier final and effective finding that regulating EGUs under CAA section 112(n)(1)(A) was appropriate and necessary, and (2) coal- and oil-fired EGUs had been listed pursuant to CAA section 112(c). These commenters concluded that following a final EPA determination that regulation of EGUs under CAA section 112 is not appropriate and necessary, both the CAA and the *New Jersey* holding are clear that the only way to delist or de-regulate EGUs would be through meeting the delisting criteria of CAA section 112(c)(9).

Response: As explained in the 2019 Proposal, the EPA believes that the D.C. Circuit's *New Jersey* decision governs the effects of the EPA's final action. More specifically, this final action reversing the 2016 Supplemental Finding does not remove the Coal- and Oil-Fired EGU source category from the CAA section 112(c)(1) list. As the Court stated, ''Congress . . . undoubtedly can limit an agency's discretion to reverse itself, and in section 112(c)(9) Congress did just that, unambiguously limiting EPA's discretion to remove sources, including EGUs, from the section 112(c)(1) list once they have been added to it.'' 517 F.3d at 583. The Court expressly rejected the argument made by the EPA at the time that if the Agency reversed course and determined it was not appropriate and necessary to regulate EGUs under CAA section 112, then that determination ''logically'' resulted in the removal of EGUs from the CAA section 112(c)(1) list. 517 F.3d at 582. As the D.C. Circuit stated: ''EPA's disbelief that it would be prevented from correcting its own 'errors' except through section 112(c)(9)'s delisting process or court-sanctioned vacatur cannot overcome the plain text enacted by Congress.'' 517 F.3d at 583. Because coal- and oil-fired EGUs remain on the CAA section 112(c)(1) source category list, the CAA section 112(d) standards for the Coal- and Oil-Fired EGU source category, as promulgated in the MATS rule, are unaffected by this action.

The EPA does not find persuasive commenters' argument that *New Jersey* is distinguishable because this action is not a reversal of a valid prior appropriate and necessary finding. As the commenters acknowledge, the D.C. Circuit in *New Jersey* did not directly assess the validity of the EPA's 2000 appropriate and necessary determination. Rather, the EPA in its 2005 action revised the 2000 appropriate and necessary finding because it was flawed. Similarly, here, the EPA has determined that the 2016 Supplemental Finding was erroneous (just as it did in 2005 with respect to the 2000 finding) and is finalizing reversal of the 2016 Supplemental Finding (just as the EPA revised the 2000 finding).

We also disagree with the commenters' argument that *New Jersey* is distinguishable because it was decided before the EPA had promulgated a NESHAP for EGUs, and, therefore, the D.C. Circuit did not address the EPA's authority to rescind MATS following a final determination that it is not appropriate and necessary

[57] As relevant here, CAA section 112(c)(9) provides that the ''Administrator *may* delete any category from the list under this subsection . . . whenever the Administrator makes the following determination . . . (i) In the case of hazardous air pollutants emitted by sources in the category that may result in cancer in humans, a determination that no source in the category . . . emits such hazardous air pollutants in quantities which may cause a lifetime risk of cancer greater than *one in one million* to the individual in the population who is most exposed to emissions of such pollutants from the source . . . .'' (emphases added). The findings of the EPA's residual risk review indicate that it is extremely unlikely that any EPA Administrator could (much less would) lawfully exercise his or her discretion to ''de-list'' the Coal- and Oil-Fired EGU source category.

to regulate EGUs under CAA section 112. The statute does preclude a challenge to the EPA's appropriate and necessary finding until standards are in place, *see* CAA section 112(e)(4); *Util. Air Regulatory Grp.* v. *EPA,* D.C. Cir. No. 01–1074, 2001 WL 936363 at *1 (D.C. Cir., July 26, 2001), but nothing in the D.C. Circuit's reasoning in the *New Jersey* decision relied on the fact that the earlier appropriate and necessary finding was not yet reviewable. In *New Jersey,* the 2000 Finding was not yet subject to judicial review and the EPA argued that the inclusion of EGUs on the CAA section 112(c) list was not final Agency action; here, the 2016 Supplemental Finding was final and subject to judicial review. *New Jersey* is clear that, even following an EPA determination that it is not appropriate and necessary to regulate EGUs under CAA section 112, the EPA cannot delist EGUs without going through the statutory delisting criteria (which the EPA has not done here). As long as EGUs stay on the CAA section 112(c) list of source categories, the EPA is required to promulgate emission standards under CAA section 112(d) regulating such sources. 42 U.S.C. 7412(c)(2) (''For the categories and subcategories the Administrator lists, the Administrator shall establish emissions standards under subsection (d) of this section.''). Thus, there is no question about it: Under the D.C. Circuit's holding in *New Jersey,* in order to rescind regulation under CAA section 112(d), *i.e.,* to rescind MATS, EGUs must first be delisted as a CAA section 112(c) source category.

As explained, the EPA believes that it is bound by the D.C. Circuit's *New Jersey* decision. The *New Jersey* decision itself was decided on *Chevron* step 1 grounds. 517 F.3d at 582 (''EPA's purported removal of EGUs from the section 112(c)(1) list therefore violated the CAA's plain text and must be rejected under step one of *Chevron.*''). Because the facts of this rulemaking are substantially similar to those before the D.C. Circuit in *New Jersey,* and because the D.C. Circuit recognized that in such a scenario the Agency has no discretion, the EPA does not believe that it has any discretion under *Chevron,* as one commenter asserted, to voluntarily rescind MATS following this final action. For these reasons, the EPA rejects commenters' assertion that it is acting in an arbitrary and capricious manner in this determination of the effect of this final Agency action.

The EPA additionally notes that one commenter stated in its comment that if the EPA finalized the proposal ''based on any justification that does not include a full updating, subject to public comment, of the analytical data base on which it rests,'' EPN ''formally petitions EPA to continue the EGU MACT rule in effect'' by making a new appropriate and necessary finding ''based on the facts as they stand today,'' which EPN believes would support a determination that regulation of EGUs under CAA section 112 is appropriate and necessary. EPN comment at 36 (April 17, 2019) (Docket ID Item No. EPA–HQ–OAR–2018–0794–2261). However, as explained above, the EPA determines that this final action has no effect on the MATS for EGUs; the MATS rule remains in effect without any further action by the EPA. To the extent any response is needed, the EPA denies the EPN petition.

Comment: Numerous stakeholders claimed a serious reliance interest in the MATS rule that should weigh against delisting or rescission of MATS as a result of the EPA's reversal of the 2016 Supplemental Finding. These stakeholders cited concerns about how delisting or rescission could lead to negative impacts on cost recovery of significant capital investments, potential disruptions to pre-existing air quality planning efforts at the state-level, or potentially foregone improvements in public health of the kind that have already resulted from improved air quality due to MATS emissions reductions. Some commenters pointed to these interests as a reason why the EPA should not adopt either of the two alternative interpretations presented by the Agency in the 2019 Proposal regarding the potential effects of this Agency action.

Response: The EPA's revised determination that regulation of EGUs under CAA section 112 is not appropriate and necessary will not remove EGUs from the CAA section 112(c) list of sources, and the previously established EGU MACT standard, as established in MATS, remains in place. As a result, the EPA does not anticipate that any of the reliance interests cited above will be jeopardized as a result of this action.

III. Background on the RTR Action

A. What is the statutory authority for this action?

Section 112 of the CAA establishes a two-stage regulatory process to address emissions of HAP from stationary sources. In the first stage, we must identify categories of sources emitting one or more of the HAP listed in CAA section 112(b) and then promulgate technology-based NESHAP for those sources. ''Major sources'' are those that emit, or have the potential to emit, any single HAP at a rate of 10 tons per year (tpy) or more, or 25 tpy or more of any combination of HAP. For major sources, these standards are commonly referred to as MACT (maximum achievable control technology) standards and must reflect the maximum degree of emission reductions of HAP achievable after considering cost, energy requirements, and non-air quality health and environmental impacts. CAA section 112(d)(2) directs the EPA, in developing MACT standards, to consider the application of measures, processes, methods, systems, or techniques, including, but not limited to, those that reduce the volume of or eliminate HAP emissions through process changes, substitution of materials, or other modifications; enclose systems or processes to eliminate emissions; collect, capture, or treat HAP when released from a process, stack, storage, or fugitive emissions point; are design, equipment, work practice, or operational standards; or any combination of the above.

For these MACT standards, the statute specifies certain minimum stringency requirements, which are referred to as MACT floor requirements, and which may not be based on cost considerations. *See* CAA section 112(d)(3). For new sources, the MACT floor cannot be less stringent than the emission control achieved in practice by the best-controlled similar source. The MACT standards for existing sources can be less stringent than floors for new sources, but they cannot be less stringent than the average emission limitation achieved by the best-performing 12 percent of existing sources in the category or subcategory (or the best-performing five sources for categories or subcategories with fewer than 30 sources). In developing MACT standards, we must also consider control options that are more stringent than the floor under CAA section 112(d)(2). We may establish standards more stringent than the floor, based on the consideration of the cost of achieving the emissions reductions, any non-air quality health and environmental impacts, and energy requirements.

In the second stage of the regulatory process, the CAA requires the EPA to undertake two different analyses, which we refer to as the technology review and the residual risk review. Under the technology review, we must review the technology-based standards and revise them ''as necessary (taking into account developments in practices, processes, and control technologies)'' no less frequently than every 8 years, pursuant

to CAA section 112(d)(6). Under the residual risk review, we must evaluate the risk to public health remaining after application of the technology-based standards and must revise the standards, if necessary, to provide an ample margin of safety to protect public health or to prevent, taking into consideration costs, energy, safety, and other relevant factors, an adverse environmental effect. The residual risk review is required within 8 years after promulgation of the technology-based standards, pursuant to CAA section 112(f). In conducting the residual risk review, if the EPA determines that the current standards provide an ample margin of safety to protect public health, it is not necessary to revise the MACT standards pursuant to CAA section 112(f).[58] For more information on the statutory authority for this rule, *see* 84 FR 2670, February 7, 2019.

B. What is the Coal- and Oil-Fired EGU source category and how does the NESHAP regulate HAP emissions from the source category?

The EPA promulgated the NESHAP for Coal- and Oil-Fired EGUs (commonly referred to as MATS) on February 16, 2012 (77 FR 9304). The standards are codified at 40 CFR part 63, subpart UUUUU. The MATS rule applies to existing and new coal- and oil-fired EGUs located at both major and area sources of HAP emissions. An EGU is a fossil fuel-fired combustion unit of more than 25 megawatts (MW) that serves a generator that produces electricity for sale. A unit that cogenerates steam and electricity and supplies more than one-third of its potential electric output capacity and more than 25 MW electric output to any utility power distribution system for sale is also an EGU. The source category covered by this MACT standard currently includes an estimated 713 EGUs located at approximately 323 facilities.

For coal-fired EGUs, the rule established standards to limit emissions of mercury, acid gas HAP, non-mercury HAP metals (*e.g.,* nickel, lead, chromium), and organic HAP (*e.g.,* formaldehyde, dioxin/furan). Standards for hydrochloric acid (HCl) serve as a surrogate for the acid gas HAP, with an alternate standard for SO_2 that may be used as a surrogate for acid gas HAP for those coal-fired EGUs with flue gas desulfurization systems and SO_2 continuous emissions monitoring systems installed and operational. Standards for filterable PM serve as a surrogate for the non-mercury HAP metals, with standards for total non-mercury HAP metals and individual non-mercury HAP metals provided as alternative equivalent standards. Work practice standards that require periodic combustion process tune-ups limit formation and emissions of the organic HAP.

For oil-fired EGUs, the rule establishes standards to limit emissions of HCl and hydrogen fluoride (HF), total HAP metals (*e.g.,* mercury, nickel, lead), and organic HAP (*e.g.,* formaldehyde, dioxin/furan). Standards for filterable PM serve as a surrogate for total HAP metals, with standards for total HAP metals and individual HAP metals provided as alternative equivalent standards. Periodic combustion process tune-up work practice standards limit formation and emissions of the organic HAP.

The MATS rule was amended on April 19, 2012 (77 FR 23399), to correct typographical errors and certain preamble text that was inconsistent with regulatory text; on April 24, 2013 (78 FR 24073), to update certain emission limits and monitoring and testing requirements applicable to new sources; on November 19, 2014 (79 FR 68777), to revise definitions for startup and shutdown and to finalize work practice standards and certain monitoring and testing requirements applicable during periods of startup and shutdown; and on April 6, 2016 (81 FR 20172), to correct conflicts between preamble and regulatory text and to clarify regulatory text. In addition, the electronic reporting requirements of the rule were amended on March 24, 2015 (80 FR 15510), to allow for the electronic submission of Portable Document Format (PDF) versions of certain reports until April 16, 2017, to allow for time for the EPA's Emissions Collection and Monitoring Plan System to be revised to accept all reporting that is required by the rule, and on April 6, 2017 (82 FR 16736), and on July 2, 2018 (83 FR 30879), to extend the interim submission of PDF versions of reports through June 30, 2018, and July 1, 2020, respectively.

Additional detail regarding the standards applicable to the seven subcategories of EGUs regulated under the MATS rule can be found in section IV.B of the 2019 Proposal. 84 FR 2670 (February 7, 2019).

C. What changes did we propose for the Coal- and Oil-Fired EGU source category in our February 7, 2019, proposed rule?

On February 7, 2019, the EPA published a proposed rule in the **Federal Register** for the NESHAP for Coal- and Oil-Fired EGUs, 40 CFR part 63, subpart UUUUU, that took into consideration the RTR analyses. 84 FR 2670. In the proposed rule, we found that residual risks due to emissions of air toxics from this source category are acceptable and that the current NESHAP provides an ample margin of safety to protect public health, and we identified no new developments in HAP emission controls to achieve further cost-effective emissions reductions under the technology review. Based on the results of these analyses, we proposed no revisions to the MATS rule.

IV. What is included in this final rule based on results of the RTR?

This action finalizes the EPA's determinations pursuant to the RTR provisions of CAA section 112 for the Coal- and Oil-Fired EGU source category.

A. What are the final rule amendments based on the residual risk review for the Coal- and Oil-Fired EGU source category?

We found risk due to emissions of air toxics to be acceptable from this source category and determined that the current NESHAP provides an ample margin of safety to protect public health and prevent an adverse environmental effect. Therefore, we did not propose and are not finalizing any revisions to the NESHAP for Coal- and Oil-Fired EGUs based on our analyses conducted under CAA section 112(f).

B. What are the final rule amendments based on the technology review for the Coal- and Oil-Fired EGU source category?

We determined that there are no developments in practices, processes, and control technologies that warrant revisions to the MACT standard for this source category. Therefore, we did not propose and are not finalizing revisions to the MACT standard under CAA section 112(d)(6).

C. What are the effective and compliance dates of the standards?

The final rule is effective on May 22, 2020. No amendments to the MATS rule are being promulgated in this action. Thus, there are no adjustments being made to the compliance dates of the standards.

[58] The D.C. Circuit has affirmed this approach to implementing CAA section 112(f)(2)(A). *See NRDC* v. *EPA,* 529 F.3d 1077, 1083 (D.C. Cir. 2008) (''If EPA determines that the existing technology-based standards provide an 'ample margin of safety,' then the Agency is free to readopt those standards during the residual risk rulemaking.'').

V. What is the rationale for our final decisions regarding the RTR action for the Coal- and Oil-Fired EGU source category?

This section of this preamble provides a description of what we proposed and what we are finalizing, the EPA's rationale for the final decisions, and a summary of key comments and responses. For comments not discussed in this preamble, comment summaries and the EPA's responses can be found in the document titled *Final Supplemental Finding and Risk and Technology Review for the NESHAP for Coal- and Oil-Fired EGUs Response to Public Comments on February 7, 2019 Proposal,* available in the docket for this action.

A. Residual Risk Review for the Coal- and Oil-Fired EGU Source Category

1. What did we propose pursuant to CAA section 112(f) for the Coal- and Oil-Fired EGU source category?

Pursuant to CAA section 112(f), the EPA conducted a residual risk review and presented the results of this review, along with our proposed decisions regarding risk acceptability, ample margin of safety, and adverse environmental effects, in the February 7, 2019, proposed rule. 84 FR 2697–2700. The results of the risk assessment are presented briefly in Table 2, and in more detail in the document titled *Residual Risk Assessment for the Coal- and Oil-Fired EGU Source Category in Support of the 2019 Risk and Technology Review Proposed Rule* (risk document for the proposed rule), available in the docket for this action.

TABLE 2—COAL- AND OIL-FIRED EGU INHALATION RISK ASSESSMENT RESULTS IN THE FEBRUARY 2019 PROPOSAL

[84 FR 2670, February 7, 2019]

Number of facilities [1]	Maximum individual cancer risk (in 1 million) [2]		Population at increased risk of cancer ≥1-in-1 million		Annual cancer incidence (cases per year)		Maximum chronic noncancer TOSHI [3]		Maximum screening acute noncancer HQ [4]
	Based on . . .		Based on . . .		Based on . . .		Based on . . .		Based on actual emission level
	Actual emissions level	Allowable emissions level	Actual emissions level	Allowable emissions level	Actual emissions level	Allowable emissions level	Actual emissions level	Allowable emissions level	
322	9	10	193,000	636,000	0.04	0.1	0.2	0.4	HQ_{REL} = 0.09 (arsenic).

[1] Number of facilities evaluated in the risk analysis. There are an estimated 323 facilities in the Coal- and Oil-Fired EGU source category; however, one facility is located in Guam, which is beyond the geographic range of the model used to estimate risks. Therefore, the Guam facility was not modeled and the emissions for that facility are not included in this assessment.

[2] Maximum individual excess lifetime cancer risk due to HAP emissions from the source category.

[3] Maximum target organ-specific hazard index (TOSHI). The target organ systems with the highest TOSHI for the source category are neurological and reproductive.

[4] The maximum estimated acute exposure concentration was divided by available short-term threshold values to develop an array of hazard quotient (HQ) values. HQ values shown use the lowest available acute threshold value, which in most cases is the reference exposure level (REL). When an HQ exceeds 1, we also show the HQ using the next lowest available acute dose-response value.

a. Chronic Inhalation Risk Assessment Results

The results of the chronic inhalation cancer risk assessment based on actual emissions, as shown in Table 2 of this preamble, indicate that the estimated maximum individual lifetime cancer risk (cancer MIR) is 9-in-1 million, with nickel emissions from oil-fired EGUs as the major contributor to the risk. The total estimated cancer incidence from this source category is 0.04 excess cancer cases per year, or one excess case in every 25 years. Approximately 193,000 people are estimated to have cancer risks at or above 1-in-1 million from HAP emitted from the facilities in this source category. The estimated maximum chronic noncancer TOSHI for the source category is 0.2 (respiratory), which is driven by emissions of nickel and cobalt from oil-fired EGUs. No one is exposed to TOSHI levels above 1 based on actual emissions from sources regulated under this source category.

The EPA also evaluated the cancer risk at the maximum emissions allowed by the MACT standard (*i.e.,* ''allowable emissions''). As shown in Table 2 of this preamble, based on allowable emissions, the estimated cancer MIR is 10-in-1 million, and, as before, nickel emissions from oil-fired EGUs are the major contributor to the risk. The total estimated cancer incidence from this source category, considering allowable emissions, is 0.1 excess cancer cases per year, or one excess case in every 10 years. Based on allowable emissions, approximately 636,000 people are estimated to have cancer risks at or above 1-in-1 million from HAP emitted from the facilities in this source category. The estimated maximum chronic noncancer TOSHI for the source category is 0.4 (respiratory) based on allowable emissions, driven by emissions of nickel and cobalt from oil-fired EGUs. No one is exposed to TOSHI levels above 1 based on allowable emissions.

b. Screening Level Acute Risk Assessment Results

Table 2 of this preamble provides the worst-case acute HQ (based on the REL) of 0.09, driven by emissions of arsenic. There are no facilities that have acute HQs (based on the REL or any other reference values) greater than 1. For more detailed acute risk results, refer to the risk document for the proposed rule, available in the docket for this action.

c. Multipathway Risk Screening and Site-Specific Assessment Results

Potential multipathway health risks under a fisher and gardener scenario were identified using a three-tier screening assessment of the HAP known to be persistent and bio-accumulative in the environment (PB–HAP) emitted by facilities in the Coal- and Oil-Fired EGU source category, and a site-specific assessment of mercury using the EPA's Total Risk Integrated Methodology.Fate, Transport, and Ecological Exposure (TRIM.FaTE) for one location (*i.e.,* three facilities located in North Dakota) as further described below. Of the 322 MATS facilities modeled, 307 facilities have reported emissions of carcinogenic PB–HAP (arsenic, dioxins, and polycyclic organic matter (POM)) that exceed a Tier 1 cancer screening value of 1, and 235 facilities have reported emissions of non-carcinogenic PB–HAP (lead, mercury, and cadmium) that exceed a Tier 1 noncancer screening value of 1. For facilities that exceeded a Tier 1 multipathway screening value of 1, we used additional facility site-specific information to perform an assessment through Tiers 2 and 3, as necessary, to determine the maximum chronic cancer and noncancer impacts

for the source category. For cancer, the highest Tier 2 screening value was 200. This screening value was reduced to 50 after the plume rise stage of Tier 3. Because this screening value was much lower than 100-in-1 million, and because we expect the actual risk to be lower than the screening value (site-specific assessments typically lower estimates by an order of magnitude), we did not perform further assessment for cancer. For noncancer, the highest Tier 2 screening value was 30 (for mercury), with four facilities having screening values greater than 20. These screening values were reduced to 9 or lower after the plume rise stage of Tier 3.

Because the final stage of Tier 3 (time-series) was unlikely to reduce the highest mercury screening values to 1, we conducted a site-specific multipathway assessment of mercury emissions for this source category. Analysis of the facilities with the highest Tier 2 and Tier 3 screening values helped identify the location for the site-specific assessment and the facilities to model with TRIM.FaTE. The assessment took into account the effect that multiple facilities within the source category may have on common lakes. The three facilities selected are located near Underwood, North Dakota. All three facilities had Tier 2 screening values greater than or equal to 20. Two of the facilities are near each other (16 kilometers (km) apart). The third facility is more distant, about 20 to 30 km from the other facilities, but it was included in the analysis because it is within the 50-km modeling domain of the other facilities and because it had an elevated Tier 2 screening value. We expect that the exposure scenarios we assessed for these facilities are among the highest, if not the highest, that might be encountered for other facilities in this source category. The refined multipathway assessment estimated an HQ of 0.06 for mercury for the three facilities assessed. We believe the assessment represents the highest potential for mercury hazards through fish consumption for the source category.

In evaluating the potential multipathway risk from emissions of lead compounds, rather than developing a screening threshold emission rate, we compare maximum estimated chronic inhalation exposure concentrations to the level of the current NAAQS for lead (0.15 micrograms per cubic meter). Values below the level of the primary (health-based) lead NAAQS are considered to have a low potential for multipathway risk. We did not estimate any exceedances of the lead NAAQS in this source category.

d. Environmental Risk Screening Results

An environmental risk screening assessment for the Coal- and Oil-Fired EGU source category was conducted for the following pollutants: Arsenic, cadmium, dioxins/furans, HCl, HF, lead, mercury (methylmercury and mercuric chloride), and POMs. In the Tier 1 screening analysis for PB–HAP (other than lead, which was evaluated differently), POM emissions had no exceedances of any of the ecological benchmarks evaluated. Arsenic and dioxin/furan emissions had Tier 1 exceedances for surface soil benchmarks. Cadmium and methylmercury emissions had Tier 1 exceedances for surface soil and fish benchmarks. Divalent mercury emissions had Tier 1 exceedances for sediment and surface soil benchmarks.

A Tier 2 screening analysis was performed for arsenic, cadmium, dioxins/furans, divalent mercury, and methylmercury emissions. In the Tier 2 screening analysis, arsenic, cadmium, and dioxin/furan emissions had no exceedances of any of the ecological benchmarks evaluated. Divalent mercury emissions from two facilities exceeded the Tier 2 screen for a sediment threshold level benchmark by a maximum screening value of 2. Methylmercury emissions from the same two facilities exceeded the Tier 2 screen for a fish (avian/piscivores) no-observed-adverse-effect-level (NOAEL) (merganser) benchmark by a maximum screening value of 2. A Tier 3 screening assessment was performed to verify the existence of the lake associated with these screening values, and it was found to be located on-site and is a man-made industrial pond, and, therefore, was removed from the assessment.

Methylmercury emissions from two facilities exceeded the Tier 2 screen for a surface soil NOAEL for avian ground insectivores (woodcock) benchmark by a maximum screening value of 2. Other surface soil benchmarks for methylmercury, such as the NOAEL for mammalian insectivores and the threshold level for the invertebrate community, were not exceeded. Given the low Tier 2 maximum screening value of 2 for methylmercury, and the fact that only the most protective benchmark was exceeded, a Tier 3 environmental risk screen was not conducted for methylmercury.

For lead, we did not estimate any exceedances of the secondary lead NAAQS. For HCl and HF, the average modeled concentration around each facility (*i.e.,* the average concentration of all off-site data points in the modeling domain) did not exceed any ecological benchmark. In addition, each individual modeled concentration of HCl and HF (*i.e.,* each off-site data point in the modeling domain) was below the ecological benchmarks for all facilities. Based on the results of the environmental risk screening analysis, we do not expect an adverse environmental effect as a result of HAP emissions from the Coal- and Oil-Fired EGU source category.

e. Facility-Wide Risk Results

An assessment of risk from facility-wide emissions was performed to provide context for the source category risks. Based on facility-wide emissions estimates developed using the same estimates of actual emissions for emissions sources in the source category, and emissions data from the 2014 National Emissions Inventory (NEI) (version 2) for the sources outside the source category, the estimated cancer MIR is 9-in-1 million, and nickel emissions from oil-fired EGUs are the major contributor to the risk. The total estimated cancer incidence based on facility-wide emissions is 0.04 excess cancer cases per year, or one excess case in every 25 years. Approximately 203,000 people are estimated to have cancer risks at or above 1-in-1 million from HAP emitted from all sources at the facilities in this source category. The estimated maximum chronic noncancer TOSHI posed by facility-wide emissions is 0.2 (respiratory), driven by emissions of nickel and cobalt from oil-fired EGUs. No one is exposed to TOSHI levels above 1 based on facility-wide emissions. These results are very similar to those based on actual emissions from the source category because there is not significant collocation of other sources with EGUs.

f. Proposed Decisions Regarding Risk Acceptability, Ample Margin of Safety, and Adverse Environmental Effect

In determining whether risks are acceptable for this source category in accordance with CAA section 112, the EPA considered all available health information and risk estimation uncertainty. The risk results indicate that both the actual and allowable inhalation cancer risks to the individual most exposed are well below 100-in-1 million, which is the presumptive limit of acceptability. Also, the highest chronic noncancer TOSHI, and the highest acute noncancer HQ, are well below 1, indicating low likelihood of adverse noncancer effects from inhalation exposures. There are also low risks associated with ingestion, with the highest cancer risk being less than 50-

in-1 million based on a conservative screening assessment, and the highest noncancer hazard being less than 1 based on a site-specific multipathway assessment. Considering this information, the EPA proposed that the residual risks of HAP emissions from the Coal- and Oil-Fired EGU source category are acceptable.

We then considered whether the current standards provide an ample margin of safety to protect public health and whether more stringent standards were necessary to prevent an adverse environmental effect by taking into consideration costs, energy, safety, and other relevant factors. In determining whether the standards provide an ample margin of safety to protect public health, we examined the same risk factors that we investigated for our acceptability determination and also considered the costs, technological feasibility, and other relevant factors related to emissions control options that might reduce risk associated with emissions from the source category. In our analysis, we considered the results of the technology review, risk assessment, and other aspects of our MACT rule review to determine whether there are any cost-effective controls or other measures that would reduce emissions further to provide an ample margin of safety. The risk analysis indicated that the risks from the source category are low for both cancer and noncancer health effects, and, therefore, any risk reductions from further available control options would result in minimal health benefits. Moreover, no additional measures were identified for reducing HAP emissions from affected sources in the Coal- and Oil-Fired EGU source category. Thus, we proposed that the current MATS requirements provide an ample margin of safety to protect public health in accordance with CAA section 112.

Based on the results of our environmental risk screening assessment, we also proposed that more stringent standards are not necessary to prevent an adverse environmental effect.

2. How did the residual risk review change for the Coal- and Oil-Fired EGU source category?

Since proposal (84 FR 2670, February 7, 2019), neither the risk assessment nor our determinations regarding risk acceptability, ample margin of safety, or adverse environmental effects have changed.

3. What key comments did we receive on the residual risk review, and what are our responses?

The EPA received comments in opposition to and in support of the proposed residual risk review and our determination that no revisions were warranted under CAA section 112(f)(2) for the Coal- and Oil-Fired EGU source category.

Generally, the comments that were not supportive of the proposed determination from the risk review claimed that the risks are understated with the methods used by the EPA to assess inhalation, multipathway, and environmental risks and suggested changes to the underlying risk assessment methodology. For example, some commenters stated that the EPA should lower the acceptability benchmark so that risks below 100-in-1 million are unacceptable, include emissions outside of the source category in question in the risk assessment, and assume that pollutants with noncancer health risks have no safe level of exposure. With regard to the Coal- and Oil-Fired EGU source category risk review, several commenters claimed that the type and quantity of organic HAP emissions modeled were underestimated, disagreeing with the EPA's determination to model only 16 organic HAP and to base the estimated emissions on EPA-developed representative detection levels (RDLs). Commenters pointed to the difference between the modeled 3.4 tons of total source category organic HAP emissions versus other estimates of total source category organic HAP, such as the EPA's 2014 NEI estimate of over 3,000 tons of total source category organic HAP emissions from 130 organic HAP.

The EPA disputes the comments objecting to the type and quantity of organic HAP modeled under the risk review. As discussed in section IV.B of the proposed rule (84 FR 2670, February 7, 2019), during the 2010 ICR effort for the original MATS rulemaking process, most of the organic HAP emissions data for EGUs were at or below the detection levels of the prescribed test methods, even when long duration test runs (*i.e.,* approximately 8 hours) were required. Under the MATS rule, organic HAP are regulated by a work practice standard that requires periodic combustion process tune-ups. As such, EGUs are not required to meet numeric emission limits for organic HAP or to test and report organic HAP emissions. Because the MATS rule does not require measurements of organic HAP, the EPA reviewed the available organic HAP test results from the 2010 ICR when developing the RTR emissions dataset. For each organic HAP tested, if 40 percent or more of the available test data were above test method detection limits, emissions estimates for that HAP were included in the modeling file. We assert that this approach which modeled each organic HAP where up to 60 percent of its 2010 ICR emissions data were below test method detection limits is a reasonable and conservative means of estimating which organic HAP are emitted from currently operating coal- and oil-fired EGUs. We also assert that the use of RDLs, which are based on averages of better-performing unit method detection levels, as well as laboratories using the most sensitive analyses across many source categories, is a reasonable means of estimating organic HAP emissions from currently operating EGUs which, under the MATS rule, are not required to measure organic HAP emissions. With regard to the 2014 NEI organic HAP emissions estimates referred to by commenters, the EPA points out that those estimates are based on pre-MATS compliance information and, thus, do not reflect reductions in organic HAP resulting from periodic tune-ups that have been conducted as required by the MATS rule. In addition, the pre-MATS compliance estimates in instances are likely to be based on, at most, 19 site-specific tests which have an average ''D'' rating and which were conducted over 25 years ago, as opposed to the MATS ICR data from up to 170 site-specific tests which would have an average A rating and which were conducted just 9 years ago.[59] Moreover, the pre-MATS compliance estimates most certainly includes emissions from EGUs that have since shut down.

Although some comments were supportive of the EPA's proposed determination based on results of the risk review, the comments claimed that

[59] As discussed in the Introduction to AP–42 (*see https://www3.epa.gov/ttn/chief/ap42/c00s00.pdf*), the AP–42 emission factor rating is an overall assessment of how good a factor is, based on both the quality of the test(s) or information that is the source of the factor and on how well the factor represents the emission source. A 'D' rated emission factor is below average and is developed from test data from a small number of facilities, and there may be reason to suspect that these facilities do not represent a random sample of the industry. In addition, test data from 'D' rated emission factors may show evidence of variability within the source population. Emission factors from the MATS ICR have not been developed for AP–42 and the current rating process has been revised from letter grades to descriptors. However, under the previous rating process, emission factors from the MATS ICR data would have received 'A' ratings, where an 'A' rated emission factor is excellent and is developed from test data taken from many randomly chosen facilities in the industry population. Moreover, for an 'A' rated emissions factor, the source category population is sufficiently specific to minimize variability.

the risks are overstated due to the overly conservative risk assessment methodology used by the EPA. Commenters stated, for example, that the risk assessment makes numerous conservative assumptions regarding emissions and exposures, the exposure assumptions are scientifically outdated, and the assessment used unrealistically high fish consumption rates. With regard to the Coal- and Oil-Fired EGU source category risk review, several commenters suggested data corrections to emissions estimates for particular EGUs that, according to commenters, resulted in overstated emissions being modeled. One commenter also suggested several revisions to the emissions estimation methodology for HAP emissions from EGUs. Several commenters pointed out that the EPA's risk review for the Coal- and Oil-Fired EGU source category and the June 2018 Electric Power Research Institute (EPRI) risk studies for coal-fired power plants [60]—each of which followed somewhat different methodologies—similarly concluded that human health risks associated with HAP emissions are within EPA acceptability thresholds.

The EPA acknowledges that the risk assessment results for the Coal- and Oil-Fired EGU source category are dependent on the emission values used in the assessment. If we were to lower emission rates based on more accurate data, we expect lower risk estimates. Because the EPA has determined that the risk is acceptable, and that the existing standards provide an ample margin of safety to protect public health in accordance with CAA section 112, making the data corrections suggested by commenters would potentially reduce risk further but would not change the determinations under the risk review. Accordingly, we conclude that it is reasonable not to update the risk assessment following the proposal, and we have finalized the risk document and re-submitted it to the docket for this action as the *Residual Risk Assessment for the Coal- and Oil-Fired EGU Source Category in Support of the 2019 Risk and Technology Review Final Rule.*

4. What is the rationale for our final approach and final decisions for the residual risk review?

We evaluated all of the comments on the EPA's proposed residual risk review and determined that no changes to the review are needed. For the reasons explained in the proposed rule, we determined that the risks from the Coal- and Oil-Fired EGU source category are acceptable, and that the current standards provide an ample margin of safety to protect public health and prevent an adverse environmental effect. Therefore, pursuant to CAA section 112(f)(2), we are finalizing our residual risk review as proposed.

B. Technology Review for the Coal- and Oil-Fired EGU Source Category

1. What did we propose pursuant to CAA section 112(d)(6) for the Coal- and Oil-Fired EGU source category?

Pursuant to CAA section 112(d)(6), the EPA conducted a technology review, which focused on identifying and evaluating developments in practices, processes, and control technologies for the emission sources in the source category. After conducting the CAA section 112(d)(6) technology review of the NESHAP for Coal- and Oil-Fired EGUs, we proposed that revisions to the standards are not necessary because we identified no cost-effective developments in practices, processes, or control technologies. More information concerning our technology review is in the memorandum titled *Technology Review for the Coal- and Oil-Fired EGU Source Category,* available in the docket for this action, and in the February 7, 2019, proposed rule. 84 FR 2700.

2. How did the technology review change for the Coal- and Oil-Fired EGU source category?

Since proposal (84 FR 2670, February 7, 2019), the technology review has not changed.

3. What key comments did we receive on the technology review, and what are our responses?

The EPA received comments in support of and against the proposed technology review and our determination that no revisions were warranted under CAA section 112(d)(6) for the Coal- and Oil-Fired EGU source category.

The comments that agreed with the EPA's proposed determination that no revisions to the MATS rule are warranted based on results of the technology review also asserted that the reductions required by MATS were not cost-effective at the time they were adopted and forced widespread and unprecedented coal-fired EGU retirements, that the general costs of emission control technologies have not significantly been reduced and have increased in some instances, and that the beyond-the-floor analyses conducted by the EPA in support of the 2012 MATS Final Rule are still valid. Commenters also asserted that the EPA cannot adopt more stringent standards under CAA section 112(d)(6) where there is no appreciable HAP-related benefit from doing so and pointed to the results of the risk assessment for the Coal- and Oil-Fired EGU source category.

The comments that were not supportive of the proposed determination from the technology review generally claimed that the review failed to assess whether control technologies deployed for compliance with the 2012 MATS Final Rule were less expensive and more effective than projected and whether technologies deemed economically infeasible in 2012 have since become cheaper.

The EPA disagrees with the comments opposing the proposed determination that no revisions were warranted under CAA section 112(d)(6). As explained in section VI.C of the proposed rule (84 FR 2670, February 7, 2019), control technologies typically used to minimize emissions of pollutants that have numeric emission limits under the MATS rule include electrostatic precipitators and fabric filters for control of PM and non-mercury HAP metals; wet scrubbers and dry scrubbers for control of acid gases (SO_2, HCl, and HF); and activated carbon injection for control of mercury. These existing air pollution control technologies that are currently in use are well-established and provide the capture efficiencies necessary for compliance with the MATS emission limits. Organic HAP, including emissions of dioxins and furans, are regulated by a work practice standard that requires periodic burner tune-ups to ensure good combustion. This work practice continues to be a practical approach to ensuring that combustion equipment is maintained and optimized to run to reduce formation and emissions of organic HAP and continues to be expected to be more effective than establishing a numeric standard for emissions that, due to current detection levels, cannot reliably be measured or continuously monitored. We received no comments that included specific information on costs or performance for control technologies deployed to comply with the 2012 MATS Final Rule or for other control technology, work practices, operational

[60] EPRI. June 8, 2018. *Hazardous Air Pollutants (HAPs) Emission Estimates and Inhalation Human Health Risk Assessment for U.S. Coal-Fired Electric Generating Units: 2017 Base Year Post-MATS Evaluation.* Available at *https://www.epri.com/#/pages/product/3002013577/?lang=en.*EPRI. June 22, 2018. *Multi-Pathway Human Health Risk Assessment for Coal-Fired Power Plants.* Available at *https://www.epri.com/#/pages/product/3002013523/?lang=en.*

procedures, process changes, or pollution prevention approaches that reduce HAP emissions. Since proposal, no information has been presented to cause us to change the proposed determination that no developments in practices, processes, or control technologies, nor any new technologies or practices were identified for the control of non-mercury HAP metals, acid gas HAP, or mercury, and that no developments in work practices nor any new work practices or operational procedures have been identified for the control of organic HAP.

4. What is the rationale for our final approach for the technology review?

We evaluated all of the comments on the EPA's technology review and determined that no changes to the review are needed. For the reasons explained in the proposed rule, we determined that no cost-effective developments in practices, processes, or control technologies were identified in our technology review to warrant revisions to the standards. Therefore, pursuant to CAA section 112(d)(6), we are finalizing our technology review as proposed.

VI. Summary of Cost, Environmental, and Economic Impacts and Additional Analyses Conducted

A. What are the affected facilities?

The EPA estimates that there are 713 existing coal- and oil-fired EGUs located at 323 facilities that are subject to the MATS rule and will be affected by this final action.

B. What are the air quality impacts?

Because the EPA is not promulgating any amendments to the MATS rule, there will be no air quality impacts as a result of this final action.

C. What are the cost impacts?

Because the EPA is not promulgating any amendments to the MATS rule, there will be no cost impacts as a result of this final action.

D. What are the economic impacts?

Because the EPA is not promulgating any amendments to the MATS rule, there will be no economic impacts as a result of this final action.

E. What are the benefits?

Because the EPA is not promulgating any amendments to the MATS rule, there will be no benefits as a result of this final action.

F. What analysis of environmental justice did we conduct?

Executive Order 12898 (59 FR 7629, February 16, 1994) establishes federal executive policy on environmental justice. Its main provision directs federal agencies, to the greatest extent practicable and permitted by law, to make environmental justice part of their mission by identifying and addressing, as appropriate, disproportionately high and adverse human health or environmental effects of their programs, policies, and activities on minority populations and low-income populations in the U.S.

As discussed in section VI.A of the proposed rule (84 FR 2670, February 7, 2019), to examine the potential for any environmental justice issues that might be associated with the source category, we performed a demographic analysis, which is an assessment of risk to individual demographic groups of the populations living within 5 km and within 50 km of the facilities.[61] In the analysis, we evaluated the distribution of HAP-related cancer and noncancer risks from the Coal- and Oil-Fired EGU source category across different demographic groups within the populations living near facilities. The results of the Coal- and Oil-Fired EGU source category demographic analysis indicate that emissions from the source category expose approximately 193,000 people to a cancer risk at or above 1-in-1 million and no people to a chronic noncancer TOSHI greater than 1. There are only four facilities in the source category with cancer risk at or above 1-in-1 million, and all of them are located in Puerto Rico. Consequently, all of the percentages of the at-risk population in each demographic group associated with the Puerto Rican population are much higher than their respective nationwide percentages, and those not associated with Puerto Rico are much lower than their respective nationwide percentages. The methodology and the results of the demographic analysis are presented in the technical report titled *Risk and Technology Review—Analysis of Demographic Factors for Populations Living Near Coal- and Oil-Fired EGUs Regulated Under the Mercury and Air Toxics Standards (MATS),* available in Docket ID No. EPA–HQ–OAR–2018–0794.

[61] *See* technical report titled *Risk and Technology Review—Analysis of Demographic Factors for Populations Living Near Coal- and Oil-Fired EGUs Regulated Under the Mercury and Air Toxics Standards (MATS).* May 23, 2018; Docket ID Item No. EPA–HQ–OAR–2018–0794–0012.

G. What analysis of children's environmental health did we conduct?

This action is not subject to Executive Order 13045 because it is not economically significant as defined in Executive Order 12866, and because the EPA does not believe the environmental health or safety risks addressed by this action present a disproportionate risk to children. This action's health and risk assessments are summarized in section V.A of this preamble and are further documented in sections V and VI of the proposed rule (84 FR 2670, February 7, 2019), and the risk document for the final rule,[62] available in the docket for this action.

VII. Statutory and Executive Order Reviews

Additional information about these statutes and Executive Orders can be found at *https://www.epa.gov/laws-regulations/laws-and-executive-orders.*

A. Executive Orders 12866: Regulatory Planning and Review and Executive Order 13563: Improving Regulation and Regulatory Review

This action is a significant regulatory action that was submitted to OMB for review because it is likely to raise novel legal or policy issues. Any changes made in response to OMB recommendations have been documented in the docket. The EPA does not project any potential costs or benefits associated with this action.

B. Executive Order 13771: Reducing Regulations and Controlling Regulatory Costs

This action is not considered an Executive Order 13771 regulatory action. There are no quantified cost estimates for this final rule because it will not result in any changes in costs.

C. Paperwork Reduction Act (PRA)

This action does not impose any new information collection burden under the PRA. OMB has previously approved the information collection activities contained in the existing regulations and has assigned OMB control number 2060–0567. This action does not impose an information collection burden because the EPA is not making any changes to the information collection requirements.

D. Regulatory Flexibility Act (RFA)

I certify that this action will not have a significant economic impact on a

[62] *See* document titled *Residual Risk Assessment for the Coal- and Oil-Fired EGU Source Category in Support of the 2019 Risk and Technology Review Final Rule,* available in Docket ID No. EPA–HQ–OAR–2018–0794.

substantial number of small entities under the RFA. This action will not impose any requirements on small entities. The EPA does not project any potential costs or benefits associated with this action.

E. Unfunded Mandates Reform Act (UMRA)

This action does not contain any unfunded mandate as described in UMRA, 2 U.S.C. 1531–1538, and does not significantly or uniquely affect small governments. The action imposes no enforceable duty on any state, local, or tribal governments or the private sector.

F. Executive Order 13132: Federalism

This action does not have federalism implications. It will not have substantial direct effects on the states, on the relationship between the national government and the states, or on the distribution of power and responsibilities among the various levels of government.

G. Executive Order 13175: Consultation and Coordination With Indian Tribal Governments

This action does not have tribal implications as specified in Executive Order 13175. It would neither impose substantial direct compliance costs on tribal governments, nor preempt Tribal law. Thus, Executive Order 13175 does not apply to this action.

Consistent with the EPA Policy on Consultation and Coordination with Indian Tribes, the EPA consulted with tribal officials during the development of this action. A summary of the consultations follows.

On April 2, 2019, the EPA held a consultation with the Blue Lake Rancheria. The tribe indicated that they did not support the 2019 Proposal for several reasons. The tribe expressed concern that the EPA's proposed finding that it is not appropriate and necessary to regulate HAP emissions from coal- and oil-fired EGUs under section 112 of the CAA would remove the legal foundation for the MATS rule. The tribe added that the EPA has neither the authority nor the obligation to remove coal- and oil-fired EGUs from the CAA section 112(c) source category list or to rescind MATS. The tribe noted that the costs of compliance for EGUs subject to MATS have already been incurred, and that those investments could be in vain if MATS is rescinded. In addition, the proposed finding will likely lead to litigation which would be a waste of taxpayer dollars, according to the tribe. The Blue Lake Rancheria stated that the EPA's cost-benefit analysis should not exclude co-benefits, and that the analysis should include healthcare costs and environmental remediation costs. The tribe discussed the health effects of exposure to mercury and noted that the RTR shows that the risks are acceptable with MATS in place; that margin of safety would be eliminated if the rule is rescinded. The tribe also expressed concern that eliminating the MATS rule will prolong the use of coal-fired power plants, which would lead to increased greenhouse gas emissions.

The EPA held a consultation with the Fond du Lac Band of Lake Superior Chippewa on April 3, 2019. The tribe also did not support the proposed finding that regulation of HAP emissions from coal- and oil-fired EGUs is not appropriate and necessary. The tribe stated that studies have shown that mercury is harmful and should be controlled, and that the EPA does not have the authority to delist EGUs from regulation under CAA section 112. According to the tribe, co-benefits from reductions of non-HAP pollutants should be considered equally with benefits from reductions of HAP. The tribe asked whether the EPA had considered factors specific to their tribe in the EPA's analysis, such as their higher consumption of fish due to cultural and subsistence reasons and the prevalence of wetlands and ditches on the reservation, which are mercury sinks. The tribe also questioned whether impacts to wildlife such as otters, loons, and eagles were considered.

Responses to these comments and others received are available in the RTC document,[63] available in the docket for this action.

H. Executive Order 13045: Protection of Children From Environmental Health Risks and Safety Risks

This action is not subject to Executive Order 13045 because it is not economically significant as defined in Executive Order 12866, and because the EPA does not believe the environmental health or safety risks addressed by this action present a disproportionate risk to children. This action's health and risk assessments are contained in sections V and VI of the proposed rule (84 FR 2670, February 7, 2019), and the risk document for the final rule, available in the docket for this action (*see* document titled *Residual Risk Assessment for the Coal- and Oil-Fired EGU Source Category in Support of the 2019 Risk and Technology Review Final Rule,* available in Docket ID No. EPA–HQ–OAR–2018–0794).

I. Executive Order 13211: Actions Concerning Regulations That Significantly Affect Energy Supply, Distribution, or Use

This action is not a ''significant energy action'' because it is not likely to have a significant adverse effect on the supply, distribution, or use of energy. This action is not anticipated to have impacts on energy supply decisions for the affected electric utility industry.

J. National Technology Transfer and Advancement Act (NTTAA)

This action does not involve technical standards.

K. Executive Order 12898: Federal Actions To Address Environmental Justice in Minority Populations and Low-Income Populations

The EPA believes that this action does not have disproportionately high and adverse human health or environmental effects on minority populations, low-income populations, and/or indigenous peoples, as specified in Executive Order 12898 (59 FR 7629, February 16, 1994). The documentation for this decision is contained in section VI.F of this preamble, section VI.A of the proposed rule (84 FR 2670, February 7, 2019), and the technical report, *Risk and Technology Review—Analysis of Demographic Factors for Populations Living Near Coal- and Oil-Fired EGUs Regulated Under the Mercury and Air Toxics Standards (MATS),* available in the docket for this action (*see* Docket ID Item No. EPA–HQ–OAR–2018–0794–0012).

L. Congressional Review Act (CRA)

This action is subject to the CRA, and the EPA will submit a rule report to each House of the Congress and to the Comptroller General of the United States. This action is not a ''major rule'' as defined by 5 U.S.C. 804(2).

Dated: April 16, 2020.

Andrew Wheeler,

Administrator.

[FR Doc. 2020–08607 Filed 5–21–20; 8:45 am]

BILLING CODE 6560–50–P

[63] See document titled *Final Supplemental Finding and Risk and Technology Review for the NESHAP for Coal- and Oil-Fired EGUs Response to Public Comments on February 7, 2019 Proposal,* available in Docket ID No. EPA–HQ–OAR–2018–0794.

FEDERAL REGISTER

Vol. 85 Friday,

No. 100 May 22, 2020

Part III

Securities and Exchange Commission

Amendments to the National Market System Plan Governing the Consolidated Audit Trail; Notice

SECURITIES AND EXCHANGE COMMISSION

[Release No. 34–88890; File No. S7–13–19]

RIN 3235–AM60

Amendments to the National Market System Plan Governing the Consolidated Audit Trail

AGENCY: Securities and Exchange Commission.

ACTION: Amendments to national market system plan.

SUMMARY: The Securities and Exchange Commission is adopting amendments to the national market system plan governing the consolidated audit trail. The amendments impose public transparency requirements on the self-regulatory organizations that are participants in the plan. Under the amendments, plan participants are required to publish and file with the Securities and Exchange Commission a complete implementation plan for the consolidated audit trail and quarterly progress reports. The amendments also establish financial accountability provisions.

DATES: June 22, 2020.

FOR FURTHER INFORMATION CONTACT: Erika Berg, Special Counsel, at (202) 551–5925, Division of Trading and Markets, Securities and Exchange Commission, 100 F Street NE, Washington, DC 20549.

SUPPLEMENTARY INFORMATION: The Commission is adopting amendments to the national market system plan governing the consolidated audit trail.

Table of Contents

I. Background
II. Discussion of the Amendments to the CAT NMS Plan
A. Amendments To Increase Operational Transparency
1. Implementation Plan
2. Quarterly Progress Reports
3. Additional Reports
B. Amendments To Increase Financial Accountability
1. Description of the Proposed Amendments
2. Modifications to the Proposed Amendments
3. Discussion of the Comments
III. Paperwork Reduction Act
A. Summary of Collection of Information
1. Implementation Plan
2. Quarterly Progress Reports
B. Proposed Use of Information
1. Implementation Plan
2. Quarterly Progress Reports
C. Respondents
D. Total Initial and Annual Reporting and Recordkeeping Burdens
1. Implementation Plan
2. Quarterly Progress Reports
E. Collection of Information Is Mandatory
F. Confidentiality of Responses to Collection of Information
G. Retention Period for Recordkeeping Requirements
IV. Economic Analysis
A. Baseline
1. Transparency of CAT Implementation Status
2. Status of Implementation
B. Benefits
C. Costs
D. Impact on Efficiency, Competition, and Capital Formation
1. Efficiency
2. Competition
3. Capital Formation
E. Alternatives
1. Fixed versus Relative Financial Accountability Milestone Dates
2. Different Timelines for Onset of RFRRs
3. Alternate Magnitudes of RFRRs
4. Requiring Error Rates for Manual and Complex Options Transactions, as Well as Allocation Information for all Options Transactions To Conform to Standards Set in the CAT NMS Plan on December 31, 2021
V. Regulatory Flexibility Act Certification
VI. Other Matters
VII. Statutory Authority and Text of the Amendments to the CAT NMS Plan

I. Background

On September 9, 2019, the Securities and Exchange Commission (''Commission'' or ''SEC'') proposed to amend the national market system plan governing the consolidated audit trail (the ''CAT NMS Plan'')[1] to include provisions designed to increase operational transparency surrounding the implementation process and the Participants' financial accountability for the timely completion of the consolidated audit trail (the ''CAT'').[2] Specifically, the Commission proposed to amend the CAT NMS Plan to require the Participants to develop a complete implementation plan containing a detailed timeline with objective milestones to achieve full CAT implementation (the ''Implementation Plan''). The proposed amendments would require the Implementation Plan to be filed with the Commission and made publicly available after approval by a Supermajority Vote[3] of the Operating Committee.[4] Prior to the Operating Committee's vote, the proposal would require the Operating Committee to submit the Implementation Plan to the Chief Executive Officer (''CEO''), President, or an equivalently situated senior officer of each Participant. The proposed amendments would also require the Participants to file with the Commission

[1] As required by Rule 613, the CAT NMS Plan was filed with the Commission by the national securities exchanges and national securities associations (the ''Participants''), who include BATS Exchange, Inc. (n/k/a Cboe BZX Exchange, Inc.), BATS–Y Exchange, Inc. (n/k/a Cboe BYX Exchange, Inc.), BOX Exchange LLC, C2 Options Exchange, Incorporated (n/k/a Cboe C2 Exchange, Inc.), Chicago Board Options Exchange, Incorporated (n/k/a Cboe Exchange, Inc.), Chicago Stock Exchange, Inc. (n/k/a NYSE Chicago, Inc.), EDGA Exchange, Inc. (n/k/a Cboe EDGA Exchange, Inc.), EDGX Exchange, Inc. (n/k/a Cboe EDGX Exchange, Inc.), Financial Industry Regulatory Authority, Inc. (''FINRA''), International Securities Exchange, LLC (n/k/a Nasdaq ISE, LLC), ISE Gemini, LLC (n/k/a Nasdaq GEMX, LLC), Miami International Securities Exchange LLC, NASDAQ OMX BX, Inc. (n/k/a Nasdaq BX, Inc.), NASDAQ OMX PHLX LLC (n/k/a Nasdaq PHLX LLC), The Nasdaq Stock Market LLC, National Stock Exchange, Inc. (n/k/a NYSE National, Inc.), New York Stock Exchange LLC, NYSE MKT LLC, and NYSE Arca, Inc. *See* 17 CFR 242.613; Securities Exchange Act Release No. 78318 (November 15, 2016), 81 FR 84696, (November 23, 2016) (''CAT NMS Plan Approval Order''). The CAT NMS Plan is Exhibit A to the CAT NMS Plan Approval Order. *See* CAT NMS Plan Approval Order, at 84943–85034. In approving the CAT NMS Plan, the Commission added ISE Mercury, LLC (n/k/a Nasdaq MRX, LLC) and Investors' Exchange LLC as Participants to the CAT NMS Plan. *See id.* at 84728. On January 30, 2017, and March 1, 2019, the Commission noticed for immediate effectiveness amendments to the CAT NMS Plan to add MIAX PEARL, LLC and MIAX Emerald, LLC, respectively, as Participants. *See* Securities Exchange Act Release Nos. 79898 (January 30, 2017), 82 FR 9250 (February 3, 2017), and 85230 (March 1, 2019), 84 FR 8356 (March 7, 2019). The CAT NMS Plan functions as the limited liability company agreement of the jointly owned limited liability company formed under Delaware state law through which the Participants conduct the activities of the CAT (the ''Company''). Each Participant is a member of the Company and jointly owns the Company on an equal basis. The Participants submitted to the Commission a proposed amendment to the CAT NMS Plan on August 29, 2019, which they designated as effective on filing. Under the amendment, the limited liability company agreement of a new limited liability company named Consolidated Audit Trail, LLC serves as the CAT NMS Plan, replacing in its entirety the CAT NMS Plan. *See* Securities Exchange Act Release No. 87149 (September 27, 2019), 84 FR 52905 (October 3, 2019). On November 27, 2019, the Commission noticed for immediate effectiveness amendments to the CAT NMS Plan to add Long-Term Stock Exchange, Inc. as a Participant. *See* Securities Exchange Act Release No. 87595 (November 22, 2019), 84 FR 65447 (November 27, 2019).

[2] *See* Securities Exchange Act Release No. 86901 (September 9, 2019), 84 FR 48458 (September 13, 2019) (''Proposing Release'').

[3] A ''Supermajority Vote'' is an ''affirmative vote of at least two-thirds of all of the members of the Operating Committee or any Subcommittee, as applicable, authorized to cast a vote with respect to a matter presented for a vote (whether or not such a member is present at any meeting at which a vote is taken) by the Operating Committee or any Subcommittee, as applicable (excluding, for the avoidance of doubt, any member of the Operating Committee or any Subcommittee, as applicable, that is recused or subject to a vote to recuse from such matter pursuant to Section 4.3(d)); *provided* that if two-thirds of all such members authorized to cast a vote is not a whole number than that number shall be rounded up to the nearest whole number.'' *See* CAT NMS Plan, *supra* note 1, at Section 1.1.

[4] ''Operating Committee'' means ''the governing body of the Company designated as such and described in Article IV'' of the CAT NMS Plan. *See id.* at Section 1.1.

and publicly publish quarterly progress reports (''Quarterly Progress Reports'' or ''Reports'') approved by at least a Supermajority Vote of the Operating Committee. Again, prior to the Operating Committee's vote, the proposal would require the Operating Committee to submit each Report to the CEO, President, or an equivalently situated senior officer of each Participant. Finally, the proposed amendments would establish target deadlines for four important implementation milestones and reduce the amount of fee recovery available to the Participants if those target deadlines are missed.[5]

In proposing the amendments to the CAT NMS Plan, the Commission stated that the Participants had neither met the deadlines set forth in the CAT NMS Plan nor their own proposed extensions of those deadlines.[6] The Commission also stated that the Participants had published a timeline with extended deadlines on the *www.catnmsplan.com* website.[7] Recently, the Commission granted the Participants exemptive relief to allow for the implementation of phased reporting to the CAT for Industry Members,[8] in place of the reporting schedule set forth for Industry Members in the CAT NMS Plan.[9] This exemptive relief is largely consistent with the timeline previously published by the Participants on the CAT NMS Plan website, with two modifications to deadlines for equities and options reporting. The Participants proposed, in their timeline and in their request for exemptive relief, that core equity reporting for Industry Members would begin on April 20, 2020 and that core options reporting for Industry Members would begin on May 18, 2020.[10] In light of impacts on market participants from COVID–19 and a subsequent no-action request submitted by the Participants,[11] the Commission provided exemptive relief authorizing the Participants' Compliance Rules [12] to allow core equity reporting for Industry Members to begin on June 22, 2020 and core options reporting for Industry Members to begin on July 20, 2020.[13] While the Commission believes that the Participants' timeline for Industry Member reporting now reflects reasonable and feasible deadlines, the continued potential for delays to the implementation of the CAT persists. The CAT is a long-awaited tool that the Commission believes will provide regulators with more timely access to a reasonably comprehensive set of trading data, thereby enabling regulators to more efficiently and effectively reconstruct market events, monitor market behavior, and investigate misconduct. Trade and order data sources currently utilized by regulators are inadequate to perform these tasks, in part because it is difficult to compile and use data that is not aggregated in one, directly accessible consolidated audit trail system. Moreover, repeated delays in CAT implementation have resulted in uncertainty and—potentially—increased costs for Industry Members and other market participants.

II. Discussion of the Amendments to the CAT NMS Plan

After careful review and consideration of the comments received,[14] the Commission continues to believe that the proposed amendments to the CAT NMS Plan, with some limited modifications, are necessary or appropriate in the public interest, for the protection of investors and the maintenance of fair and orderly markets, to remove impediments to, and perfect the mechanisms of, a national market system. The proposed amendments also will help to ensure that the Participants fulfill their obligations to deliver a functional CAT on a reasonably achievable timeframe. The Commission is therefore adopting the proposed amendments with the modifications specified herein.

A. Amendments To Increase Operational Transparency

Currently, the CAT NMS Plan does not contain disclosure provisions that require the Participants to provide public updates regarding the CAT implementation process. The proposed amendments were designed to increase operational transparency by requiring the Participants to file with the Commission and make publicly available an Implementation Plan and Quarterly Progress Reports that would provide the Commission and other market participants with detailed and up-to-date information about the status of CAT implementation. Commenters were broadly supportive of these provisions, but some commenters requested that the Commission modify certain aspects of the proposed amendments. After considering these comments, and as described more fully below, the Commission is adopting the operational transparency amendments

[5] *See* Proposing Release, *supra* note 2, at 48461–74, for a more complete description of the proposed amendments.

[6] The CAT NMS Plan established deadlines related to the implementation of critical CAT functionality, including (1) the requirement that the Participants begin recording and reporting data by November 15, 2017, and (2) the requirement that each Participant require Industry Members and Small Industry Members to begin reporting data by November 15, 2018, and November 15, 2019, respectively. *See* CAT NMS Plan, *supra* note 1, at Section 6.7(a). The Participants requested an exemption extending these deadlines. The Commission did not grant this request. *See, e.g.,* Statement on Status of the Consolidated Audit Trail (August 27, 2018), *available at https://www.sec.gov/news/public-statement/tm-status-consolidated-audit-trail* (stating that the Participants requested an exemption to commence Participant reporting on November 15, 2018, and Industry Member reporting on November 15, 2019). Although the Participants began reporting some transaction data to the Central Repository on November 15, 2018, the Participants acknowledged that not all of the required functionality had been implemented. *See* CAT NMS Announces Initiation of Reporting to the Consolidated Audit Trail (November 16, 2018), *available at https://www.catnmsplan.com/wp-content/uploads/2018/11/Press-Release-CAT-Launch-final.pdf. See* Proposing Release, *supra* note 2, at 48458–461 for additional discussion of the various deadlines missed by the Participants.

[7] *See https://catnmsplan.com/timelines/* (stating that the Participants' timeline provides for commencement of reporting by Large Industry Members and Small Industry Members that are reporters to the Order Audit Trail System (''OATS'') on April 20, 2020) (as viewed on March 12, 2020).

[8] *See* Securities Exchange Act Release No. 88702 (April 20, 2020), 85 FR 23075 (April 24, 2020) (''Exemptive Relief Order'').

[9] *See* CAT NMS Plan, *supra* note 1, at 6.7(a).

[10] *See* note 8 *supra.*

[11] *See id.* at 23082 n.105.

[12] The CAT NMS Plan requires the Participants to ''endeavor to promulgate consistent rules (after taking into account circumstances and considerations that may impact Participants differently) requiring compliance by their respective Industry Members with the provisions of SEC Rule 613 and [the CAT NMS Plan].'' *See* CAT NMS Plan, *supra* note 1, at Section 3.11. ''Compliance Rule'' is a defined term under the CAT NMS Plan and means ''the rule(s) promulgated by such Participant as contemplated by Section 3.11.'' *See id.* at Section 1.1.

[13] *See id.* at 23082. The Participants stated that they plan to file revisions to their Compliance Rules consistent with their exemptive relief request. *See id.* at 23076 n.13.

[14] *See https://www.sec.gov/comments/s7-13-19/s71319.htm.* Some of these letters included comments beyond the scope of the proposed amendments, suggesting changes to the CAT's governance, to the CAT's technical requirements, or to the CAT's collection of sensitive personal information (''PII''). *See* Letter from Thomas Tesauro, President, Fidelity Capital Markets, to Vanessa Countryman, Secretary, Commission, dated October 28, 2019 (''Fidelity Letter''), at 5, *available at https://www.sec.gov/comments/s7-13-19/s71319-6357608-196387.pdf;* Letter from Dennis M. Kelleher, President & CEO, and Lev Bagramian, Senior Securities Policy Advisor, Better Markets, Inc., to Vanessa Countryman, Secretary, Commission, dated October 28, 2019 (''Better Markets Letter''), at 3, 6, 9–12, *available at https://www.sec.gov/comments/s7-13-19/s71319-6355349-196250.pdf;* Letter from Christopher A. Iacovella, Chief Executive Officer, American Securities Association, to Vanessa Countryman, Secretary, Commission, dated October 28, 2019 (''ASA Letter''), at 2, *available at https://www.sec.gov/comments/s7-13-19/s71319-6381876-197754.pdf.* Because these subjects are not directly related to the proposed amendments, they are not addressed in this rulemaking.

as proposed, with certain modifications.[15]

1. Implementation Plan

As proposed, Section 6.6(c)(i) of the CAT NMS Plan would require the Participants to file with the Commission and make publicly available on each of the Participant websites (or collectively on the CAT NMS Plan website) a complete Implementation Plan.[16] The proposed Implementation Plan would set forth how and when the Participants will achieve full CAT implementation, including the Participants' timeline for achieving both the objective milestones that are set forth in Section C.10 of Appendix C of the CAT NMS Plan to assess the progress of CAT implementation [17] (''Objective Milestones'') and the CAT implementation milestones associated with the proposed financial accountability provisions discussed below (''Financial Accountability Milestones'') [18] (collectively, the ''Implementation Milestones'').[19] Proposed Section 6.6(c)(i) would require the Implementation Plan to be filed with the Commission and published on each Participant website or the CAT NMS Plan website no later than thirty calendar days following the effective date of the proposed amendments.[20]

Before the Implementation Plan can be filed with the Commission or made publicly available via a website, proposed Section 6.6(c)(iii) would require that the Implementation Plan be approved by at least a Supermajority Vote of the Operating Committee. However, if the Implementation Plan is approved only by a Supermajority Vote of the Operating Committee, and not by a unanimous vote of the Operating Committee (including, for the avoidance of doubt, all members of the Operating Committee, whether or not present or recused), the proposed amendments would require each Participant whose Operating Committee member did not vote to approve the Implementation Plan to separately file with the Commission and make publicly available on each of the Participant websites, or collectively on the CAT NMS Plan website, a statement identifying itself and explaining why the member did not vote to approve the Implementation Plan.[21] In addition, the proposed amendments would require the Operating Committee to submit the Implementation Plan to the CEO, President, or an equivalently situated senior officer of each Participant prior to the Operating Committee's vote.[22] The Commission anticipates that the Participants will provide the Implementation Plan to the CEO, President, or an equivalently situated senior officer of each Participant sufficiently in advance of the Operating Committee vote to permit review.[23]

The Commission believes that requiring public disclosure regarding the progress of CAT implementation through the Implementation Plan will help to ensure that the CAT is developed on a reasonable timeline. Several commenters expressed general support for the increased operational transparency that would be provided by the Implementation Plan. One commenter, for example, stated that ''the proposed Implementation Plan is appropriate to facilitate public transparency of the development and implementation milestones required to be achieved by the Participants and industry members tasked with CAT implementation'' and asserted that ''the filing of an Implementation Plan with the Commission may inject additional accountability and transparency into the Participants['] CAT milestone delivery targets.'' [24] Another commenter ''agree[d] with the Commission that requiring the CAT NMS to create and publicize a detailed timeline with concrete deadlines (as set in the Proposal) would prod the [CAT NMS, LLC] consortium and the new Plan Processor, FINRA CAT, to progress towards implementation.'' [25]

Some commenters had more specific comments regarding the proposed provisions relating to the Implementation Plan. For instance, regarding the deadline for submitting the Implementation Plan, the Participants stated that they had already ''developed a timeline for the completion of the CAT, and therefore believe[d] that 30 days is sufficient to file with the Commission and publish the Implementation Plan.'' [26] No other commenters addressed this issue. Consistent with the Proposing Release and the views expressed by the Participants, the Commission continues to believe that thirty calendar days is a sufficient amount of time for the

[15] *See* Part II.A.1.–2. *infra,* for a discussion of the modifications to the proposed amendments.

[16] *See* proposed Section 6.6(c)(i).

[17] *See* CAT NMS Plan, *supra* note 1, at Appendix C, Section C.10.

[18] The Financial Accountability Milestones, and their relation to the financial accountability provisions, are described in more detail in Part II.B. *infra.*

[19] The timeline required by proposed Section 6.6(c)(i) would include the completion date and a description of the status for each Implementation Milestone. If the Participants decide to complete any of the Implementation Milestones by releasing functionality in a phased approach, proposed Section 6.6(c)(i) would further require the Implementation Plan to describe with specificity each phased release necessary to achieve the completion of the relevant Implementation Milestone and to provide completion dates for each such release. *See* Proposing Release, *supra* note 2, at 48461–62, for additional discussion of the proposed Implementation Plan.

[20] *See* proposed Section 6.6(c)(i).

[21] *See* proposed Section 6.6(c)(iii). The proposed amendments do not require this statement to include any confidential or sensitive information related to the security of the CAT, the security of CAT Data, or the operation of the CAT. The Participants must comply with the security plan developed by the Plan Processor pursuant to Appendix D, Section 4.1 of the CAT NMS Plan and any security-related policies and procedures developed pursuant to Regulation SCI. *See* CAT NMS Plan, *supra* note 1, at Appendix D, Section 4.1 (requiring the Plan Processor to provide to the Operating Committee a comprehensive security plan, including a process for responding to security incidents and reporting of such incidents); 17 CFR 242.1001 (requiring each SCI entity to establish, maintain, and enforce written policies and procedures reasonably designed to ensure that its SCI systems have levels of security adequate to maintain operational capabilities and promote the maintenance of fair and orderly markets).

[22] *See id.; see also* Proposing Release, *supra* note 2, at 48464, for additional discussion of these requirements. No commenters objected to these requirements, and one commenter stated that there was no need to ''go further to require such CEOs, Presidents and equivalent officers to certify'' the Implementation Plan, ''an issue raised for comment in the Proposing Release.'' *See* Letter from Michael Simon, CAT NMS Plan Operating Committee Chair, to Vanessa Countryman, Secretary, Commission, dated October 28, 2019 (''Participant Letter''), at 7, *available at https://www.sec.gov/comments/s7-13-19/s71319-6357609-196389.pdf; see also* Proposing Release, *supra* note 2, at 48465. The Commission is not adopting a certification requirement for the Implementation Plan.

[23] *See, e.g.,* Proposing Release, *supra* note 2, at 48476 n.143.

[24] *See* Letter from Christopher Bok, Director, Financial Information Forum, to Vanessa Countryman, Secretary, Commission, dated October 28, 2019 (''FIF Letter''), at 4–5 *available at https://www.sec.gov/comments/s7-13-19/s71319-6355358-196251.pdf. See also, e.g.,* Letter from Theodore R. Lazo, Managing Director & Associate General Counsel, and Ellen Greene, Managing Director, Financial Services Operations, Securities Industry and Financial Markets Association, to Vanessa Countryman, Secretary, Commission, dated October 28, 2019 (''SIFMA Letter''), at 1, *available at https://www.sec.gov/comments/s7-13-19/s71319-6366765-195937.pdf* (supporting the ''Commission'[s] actions to . . . increase transparency around [the] CAT implementation process''); Fidelity Letter, at 3 (supporting ''the Proposal's operational transparency requirements to formalize and publicly document CAT implementation progress'').

[25] *See* Better Markets Letter, at 6. ''Plan Processor'' means ''the Initial Plan Processor or any other Person selected by the Operating Committee pursuant to SEC Rule 613 and Sections 4.3(b)(i) and 6.1, and with regard to the Initial Plan Processor, the Selection Plan, to perform the CAT processing functions required by SEC Rule 613 and set forth in this Agreement.'' *See* CAT NMS Plan, *supra* note 1, at Section 1.1. As explained in the Proposing Release, Thesys Technologies LLC (or ''Thesys CAT LLC'') was initially selected as the Plan Processor, but was replaced by FINRA (''FINRA CAT LLC'') on February 26, 2019. *See* Proposing Release, *supra* note 2, at 48459–460.

[26] *See* Participant Letter, at 6.

Participants to develop, file, and publish the Implementation Plan.

Regarding the Objective Milestones, the Participants ''confirm[ed]'' that the Objective Milestones ''effectively formalize the status updates and other informal reports that are in the Updated Master Plan'' submitted to the Commission on May 16, 2019.[27] The Participants further stated that ''basing the objective milestones on the Updated Master Plan is more appropriate than basing them on arbitrary milestones or milestones that have not been vetted by the Participants.'' [28] However, the Objective Milestones are not based on the Updated Master Plan. Rather, the Objective Milestones are set forth in the CAT NMS Plan and provide details and required completion dates for a series of objective CAT implementation milestones, including implementation milestones relating to technical specifications, testing, and production.[29]

Another commenter suggested that the Commission should require the Implementation Plan to be ''prominently publicized on the CAT NMS's website.'' [30] The Commission agrees that the CAT NMS Plan website would be a logical place to publish the Implementation Plan, and this is a permissible approach under proposed Section 6.6(c)(i).[31] However, the information contained in the Implementation Plan will be just as accessible to the public if published on each Participants' website—another approach permitted by proposed Section 6.6(c)(i) as long as the required information is published by the timeframe set forth in the rule, and one that provides each Participant with more flexibility and control over how and when it complies with the proposed amendments.

For these reasons, and the reasons set forth in the Proposing Release,[32] the Commission is adopting the provisions related to the Implementation Plan substantially as proposed. However, the Commission believes it is appropriate to make two modifications to clarify the intended operation of the amendments.

First, the Commission is modifying language in proposed Section 6.6(c)(i) to clarify the public disclosure requirements of the operational transparency amendments. In the Proposing Release, the Commission indicated that the Participants would be required to make the Implementation Plan available either individually on ''each of the Participant websites'' or collectively on the CAT NMS Plan website. To the extent that the Participants choose to publish the Implementation Plan and Quarterly Progress Reports individually, each Participant is responsible for posting these materials on its own website, and each Participant is responsible for posting the materials in a timely manner. Accordingly, the Commission is modifying the phrasing of proposed Section 6.6(c)(i) to state that the Participants shall make the Implementation Plan publicly available on ''each of their websites'' or collectively on the CAT NMS Plan website.

Second, the Commission is modifying proposed Section 6.6(c)(iii) to clarify which Participants are required to publish statements that explain why a particular member of the Operating Committee did not vote to approve the Implementation Plan or Quarterly Progress Reports. As proposed, Section 6.6(c)(iii) stated that ''each Participant whose Operating Committee member did not vote to approve the Implementation Plan or Quarterly Progress Report shall separately file with the Commission and make publicly available on each of the Participant websites, or collectively on the CAT NMS Plan website, a statement identifying itself and explaining why the member did not vote to approve the Implementation Plan or Quarterly Progress Report.'' [33] The Commission is modifying this language to clarify that each Participant who dissents is not required to make publicly available its explanatory statements on other Participants' websites. If the Participants choose to not publish such explanatory statements collectively on the CAT NMS Plan website, the Participants with dissenting members will only be required to publish such statements on their own websites. Accordingly, the Commission is modifying the amendments to specify that ''each Participant whose Operating Committee member did not vote to approve the Implementation Plan or Quarterly Progress Report shall separately file with the Commission a statement identifying itself and explaining why the member did not vote to approve the Implementation Plan or Quarterly Progress Report. These statements shall be made publicly available by each dissenting Participant on its website or collectively by all Participants on the CAT NMS Plan website.''

2. Quarterly Progress Reports

As proposed, Section 6.6(c)(ii) of the CAT NMS Plan would require the Participants to file with the Commission and make publicly available on each of the Participant websites (or collectively on the CAT NMS Plan website) complete Quarterly Progress Reports providing a detailed description of the progress made by the Participants toward achieving each of the Implementation Milestones set forth in the Implementation Plan.[34] The proposed amendments describe the information that would be required to be included in the Quarterly Progress Reports.

Specifically, for Implementation Milestones that have been completed by the end of a given calendar quarter, the proposed amendments would require the inclusion of the following information: (1) The completion date provided in the Implementation Plan, (2) the date on which the Implementation Milestone was actually completed, and (3) a description of any variance from the Implementation Plan.[35] For Implementation Milestones that are in progress at the end of a given calendar quarter, the proposed amendments would require the inclusion of the following information: (1) The completion date provided in the Implementation Plan, (2) the currently targeted completion date, and (3) a description of (a) the current status of the Implementation Milestone, (b) any difference between the Implementation Plan completion date and the currently targeted completion date, including the basis for making the adjustment and the impact of this adjustment on any other Implementation Milestone, and (c) any

[27] *See* Participant Letter, at 5.

[28] *See id.*

[29] *See* CAT NMS Plan, *supra* note 1, at Appendix C, Section C.10.

[30] *See* Better Markets Letter, at 7. This commenter also thought it ''would be beneficial if the SEC also creates a 'Spotlight' web page . . . and host this timeline along with all other CAT related filings, notices, and Commission actions,'' because a ''one-stop web page should enable investors, market participants, journalists, Members of Congress, and all other interested parties, to remain informed of the progress, or lack thereof, of the CAT's implementation.'' *See id.* The Commission notes that such a page already exists: *https://www.sec.gov/divisions/marketreg/rule613-info.htm.* As appropriate, the Commission will continue to update this page as the information required by the amendments is published by the Participants.

[31] *See* proposed Section 6.6(c)(i).

[32] *See* Proposing Release, *supra* note 2, at 48461–62, 48464.

[33] *See* proposed Section 6.6(c)(iii).

[34] *See* proposed Section 6.6(c)(ii). If, subsequent to the publication of the Implementation Plan, the Participants decide to complete any of the Implementation Milestones by releasing functionality in a phased approach, the proposed amendments would require each Quarterly Progress Report to reflect this change by describing the phases necessary to achieve the completion of the relevant milestone and providing the information specified by proposed Section 6.6(c)(ii) for each phase. *See id.*

[35] *See* proposed Section 6.6(c)(ii)(A).

other factual indicators that demonstrate the current level of completion with respect to the Implementation Milestone.[36] For Implementation Milestones that have not yet been initiated by the end of a given calendar quarter, the proposed amendments would require the inclusion of the following information: (1) The completion date provided in the Implementation Plan, (2) the currently targeted completion date, and (3) a description of (a) the current status of the Implementation Milestone, and (b) any difference between the Implementation Plan completion date and the currently targeted completion date, including the basis for making the adjustment and the impact of this adjustment on any other Implementation Milestone.[37]

Proposed Section 6.6(c)(ii) would require the initial Quarterly Progress Report to be filed and made public no later than fifteen business days following the end of the calendar quarter in which the Implementation Plan was filed and made public. Subsequent Reports would be required to be filed and made public no later than fifteen business days following the end of each calendar quarter.[38] Before any Quarterly Progress Report can be filed with the Commission or made publicly available via a website, proposed Section 6.6(c)(iii) would require that the Report be approved by at least a Supermajority Vote of the Operating Committee. However, if the Report is approved only by a Supermajority Vote of the Operating Committee, and not by a unanimous vote of the Operating Committee (including, for the avoidance of doubt, all members of the Operating Committee, whether or not present or recused), the proposed amendments would require each Participant whose Operating Committee member did not vote to approve the Report to separately file with the Commission and make publicly available on each of the Participant websites, or collectively on the CAT NMS Plan website, a statement identifying itself and explaining why the member did not vote to approve the Report.[39] In addition, the proposed amendments would require the Operating Committee to submit the Quarterly Progress Report to the CEO, President, or an equivalently situated senior officer of each Participant prior to the Operating Committee's vote.[40] The Commission anticipates that the Participants will provide the Quarterly Progress Report to the CEO, President, or an equivalently situated senior officer of each Participant sufficiently in advance of the Operating Committee vote to permit review.[41]

The Commission believes that requiring detailed and up-to-date public disclosure through the proposed Quarterly Progress Reports will furnish the Commission and market participants with a better understanding of the progress made by the Participants towards CAT implementation.[42] The Participants stated in their comment letter that the proposed Reports ''would impose requirements that are . . . unnecessary,'' because ''CAT LLC and FINRA CAT currently provide and will continue to provide Industry Members and the general public with extensive and appropriate information related to the progress of the CAT System build'' and because ''the Commission and its staff . . . have continued access to extensive information regarding the CAT.'' [43]

The Commission, however, disagrees. While the Participants have provided information regarding CAT implementation to the Commission, much of the information provided by the Participants to the Commission has not been shared widely with the public. One commenter asserted that ''not much is publicly known [about] why the CAT is still not up and running,'' due to the ''secrecy of the CAT NMS consortium'' and the current lack of transparency.[44] This commenter ''agree[d] with the Commission that quarterly detailed reporting is appropriate and would provide useful information to all interested parties,'' including ''an early-warning to the Commission and interested-parties about possible upcoming failures to meet any of the regulatory milestones . . . .'' [45] Another Industry Member commenter similarly believed that the Quarterly Progress Reports would ''provide us more information on the timing of our CAT reporting obligations, which should help us more efficiently develop and implement regulatory data collection systems, adjusting as needed, as well as monitor and better understand the progress of overall CAT implementation.'' [46] The Commission agrees with these comments, and, consistent with the Proposing Release, continues to believe that the Quarterly Progress Reports will provide useful information to market participants and other members of the public.[47]

One Industry Member commenter not only supported the disclosures required by the proposed Quarterly Progress Reports, but also recommended expanding the Reports to include ''financial information detailing the fees, costs and expenses that the Participants have incurred to build and implement the CAT,'' which should be ''clearly tied to the relevant Financial Accountability Milestone'' in the Reports.[48] The commenter believed that such information would ''help Industry Members better understand the universe of costs they might be asked to pay at

[36] *See* proposed Section 6.6(c)(ii)(B); *see also* Proposing Release, *supra* note 2, at 48463, for examples of factual indicators that would satisfy this requirement. As noted below, the Commission does not believe that the inclusion of factual indicators requires the Participants to publicly disclose any confidential or sensitive information related to the security of the CAT, the security of CAT Data, or the operation of the CAT. *See* notes 54–61 and associated text *infra,* for further discussion.

[37] *See* proposed Section 6.6(c)(ii)(C); *see also* Proposing Release, *supra* note 2, at 48462–64, for additional discussion of these requirements.

[38] *See* proposed Section 6.6(c)(ii).

[39] *See* proposed Section 6.6(c)(iii). The proposed amendments do not require this statement to include any confidential or sensitive information related to the security of the CAT, the security of CAT Data, or the operation of the CAT. Moreover, the Participants must comply with the security plan developed by the Plan Processor pursuant to Appendix D, Section 4.1 of the CAT NMS Plan and any security-related policies and procedures developed pursuant to Regulation SCI. *See* note 21 *supra.*

[40] *See id.; see also* Proposing Release, *supra* note 2, at 48464, for additional discussion of these requirements. No commenters objected to these requirements, and one commenter asserted that there was no need to ''go further to require such CEOs, Presidents and equivalent officers to certify'' the Reports, ''an issue raised for comment in the Proposing Release.'' *See* Participant Letter, at 7; *see also* Proposing Release, *supra* note 2, at 48465. The Commission is not adopting a certification requirement for the Reports.

[41] *See* Proposing Release, *supra* note 2, at 48477 n.159.

[42] As discussed above, some commenters suggested that requiring the Participants to publish the Implementation Plan would increase the Participants' accountability for meeting the deadlines specified in that document. *See* notes 24–25 and associated text *supra.* The Commission agrees and anticipates that requiring the Participants to publish Quarterly Progress Reports will have a similar effect.

[43] *See* Participant Letter, at 6–7.

[44] *See* Better Markets Letter, at 4.

[45] *See id.* at 7.

[46] *See* Fidelity Letter, at 3. *See also* FIF Letter, at 3 (stating that ''additional transparency will better inform all stakeholders of the status of CAT implementation objectives and milestones, will reduce uncertainty, and will provide industry members with further assurances that full CAT implementation will occur on specified milestones'').

[47] In addition to providing market participants with information regarding Industry Member reporting deadlines, the Quarterly Progress Reports will also include the disclosure of information regarding the implementation of Participant reporting to the CAT and the availability of functionality for regulatory users, which the Participants have not made publicly available up to this point.

[48] *See* Fidelity Letter, at 3–4. The commenter suggested that such information could be ''disclosed on a one quarter lagging basis.'' *See id.* at 3 n.4.

a future date as well as how those costs relate to each Financial Accountability Milestone,'' as well as help Industry Members to ''review and comment on individual CAT fee proposals submitted by the Plan Participants.'' [49] To the extent that the Participants seek to recover the fees, costs, and expenses incurred in connection with the development, implementation, and operation of the CAT, the Commission believes that relevant information would be included in fee filings.[50] Also, fee filings relating to fees incurred after the effective date of these amendments must clearly indicate to which Financial Accountability Milestone the fees are related.[51] All fee filings with this information would be filed with and published by the Commission to provide notice to Industry Members and to solicit comments from market participants.[52] In addition, the CAT NMS Plan requires the Participants to publish annual audited financial statements,[53] which should also provide more detailed financial information to market participants. Therefore, the Commission does not believe that expanding the Quarterly Progress Reports to require this additional information is necessary.

The Participants also objected to some of the specific disclosures required by the proposed Quarterly Progress Report, claiming that the proposed Reports would ''impose requirements that are . . . at odds with maintaining the security of the CAT.'' [54] For example, the Participants stated that ''requiring the broad publication of detailed explanations related to connectivity and acceptance testing . . . might provide information to unscrupulous persons set on finding a way to access and exploit information in the CAT.'' Similarly, they expressed concern that ''[p]ublishing pass/fail percentages of test cases and information with respect to defects remediated in connection with reporting milestones, and the reasons that certain documentation under development has not been completed,'' was inappropriate for security reasons, although they did concede that it was ''appropriate to provide such information to the Commission and the staff . . . .'' [55]

The Commission takes concerns regarding the security of the CAT very seriously and agrees that the Participants should not include details in the Quarterly Progress Reports that would reveal any sensitive security information related to the CAT.[56] However, the Commission does not believe that the proposed amendments, or the examples raised by the Participants in their comment letter, implicate any such concerns. The examples raised by the Participants as presenting security concerns are examples provided by the Commission in the Proposing Release of factual indicators that could be used to demonstrate the current status of CAT implementation.[57] These factual indicators focused on functional requirements (*e.g.,* enabling Industry Member reporting), as opposed to security requirements, that would capture the scope and quality of the Participants' progress in implementing the CAT. The Commission does not believe that the factual indicators suggested in the Proposing Release require the disclosure of information that will affect the security of the CAT.

For example, the Commission suggested in the Proposing Release that factual indicators for milestones related to connectivity and acceptance testing could include: ''the status of the publication of test plans; statistics on the amount of expected or actual activity in the test environment (*e.g.,* number of testers, number of reportable events, error rates/trends observed); the number of Plan Processor functional requirements for which defects were found categorized by criticality; [and] progress remediating defects . . . .'' [58] These factual indicators speak solely to the Participants' progress in developing a usable data reporting system. The inclusion of such factual indicators in a Quarterly Progress Report would not require the Participants to specifically identify each defect and explain what steps have been taken to remedy that particular defect; rather, the amendments permit data regarding defects to be disclosed in an aggregated form with a non-specific explanation of progress made towards remediating defects.[59] The Commission does not believe that such disclosures present a security concern, because they will only provide information regarding the progress made towards implementing required CAT functionality without revealing any security-related information.[60]

As stated in the Proposing Release, the Commission does not believe that the proposed amendments require the Participants to publicly disclose any confidential or sensitive information related to the security of the CAT, the security of CAT Data, or the operation of the CAT.[61] Rather, the proposed amendments require only the disclosure of information related to and demonstrating the progress of the Participants in developing CAT functionality (*e.g.,* pass/fail percentages of test cases relating to reporting functionality, not pass/fail rates relating to the development of security tools and security-related test cases), and the Commission does not believe that such disclosures impact the security of the CAT. The Commission is therefore adopting the disclosure requirements for the Quarterly Progress Reports as proposed.

Finally, the Participants stated that the proposed ''fifteen day-turnaround period'' was too brief and suggested ''modifying the proposal to require the filing and posting of the Quarterly Progress Report[s] no later than 30 days after the end of each quarter.'' [62] To respond to this comment, the Commission is modifying its proposed rule to require: (1) That the initial Quarterly Progress Report be filed with

[49] *See id.* at 4.

[50] *See* Proposing Release, *supra* note 2, at 48465, for a discussion of the fee filings that the Participants are required to submit in order to recover CAT-related fees, costs, and expenses from Industry Members. *See also* 15 U.S.C. 78s(b).

[51] *See* note 88 and associated text *infra,* for a discussion of the information that the Participants would be required to include in these fee filings under the amendments.

[52] *See, e.g.,* 15 U.S.C. 78s; 17 CFR 242.608.

[53] *See* CAT NMS Plan, *supra* note 1, at Section 9.2(a). *See also https://catnmsplan.com/announcements/audited-financial-statements* (noting that audited financial statements for the Company from inception through 2018 are available upon request).

[54] *See* Participant Letter, at 6.

[55] *See id.*

[56] *See* notes 21, 39 *supra.*

[57] *See* Proposing Release, *supra* note 2, at 48463.

[58] *See id.*

[59] For the same reasons, the Commission does not believe that publication of aggregated pass/fail percentages for test cases associated with reporting milestones, or disclosure of the aggregated number and percentage of functional reporting requirements that have completed internal testing with all defects remediated, presents a security risk to the CAT. These factual indicators do not require the Participants to disclose details regarding the vulnerabilities or flaws of the CAT that could be exploited by bad actors. Likewise, the Commission does not believe that the publication of the ''reasons that certain documentation under development has not been completed'' presents a security concern. This suggested factual indicator relates solely to the development of technical specifications—documentation that is already public and that does not relate to any security policies or procedures. The Commission therefore does not believe this factual indicator raises any security concerns.

[60] Moreover, the Plan Processor has already begun to release similar information to the public, which demonstrates that the factual indicators suggested by the Commission can be published without implicating security concerns. *See, e.g.,* Industry Test Release Status, *available at https://www.catnmsplan.com/wp-content/uploads/2020/01/1.21.20-Industry-Webinar-Industry-Test-Release-Checkpoint.pdf.*

[61] *See* Proposing Release, *supra* note 2, at 48461 n.42.

[62] *See* Participant Letter, at 7.

the Commission and made publicly available no later than thirty calendar days after the end of the calendar quarter in which the Implementation Plan was filed and made publicly available;[63] and (2) that each subsequent Quarterly Progress Report be filed with the Commission and made publicly available no later than thirty calendar days after the end of each calendar quarter (*e.g.,* October 30, 2020; January 30, 2021; April 30, 2021; or July 30, 2021).[64] The Commission believes this change will help to ensure that the Participants have sufficient time to prepare, file, and publish high-quality Reports, while still providing the Commission and market participants with timely and up-to-date disclosures regarding the process of CAT implementation.

For these reasons, and the reasons set forth in the Proposing Release,[65] the Commission is adopting the provisions related to the Quarterly Progress Reports substantially as proposed, except that proposed Section 6.6(c)(ii) will provide the Participants with additional time to prepare, file, and publish the Quarterly Progress Reports as described above. In addition, the Commission is adopting three modifications to proposed Section 6.6(c) to clarify the intended operation of the amendments.

First, the Commission is modifying language in proposed Section 6.6(c)(ii) to clarify the public disclosure requirements of the operational transparency amendments. In the Proposing Release, the Commission indicated that the Participants would be required to make the Quarterly Progress Reports available either individually on ''each of the Participant websites'' or collectively on the CAT NMS Plan website. To the extent that the Participants choose to publish the Quarterly Progress Reports individually, each Participant is responsible for posting these materials on its own website, and each Participant is responsible for posting the materials in a timely manner. Accordingly, the Commission is modifying the phrasing of proposed Section 6.6(c)(ii) to state that the Participants shall make the Quarterly Progress Reports publicly available on ''each of their websites'' or collectively on the CAT NMS Plan website.

Second, the Commission is modifying proposed Section 6.6(c)(iii) to specify that ''each Participant whose Operating Committee member did not vote to approve the Implementation Plan or Quarterly Progress Report shall separately file with the Commission a statement identifying itself and explaining why the member did not vote to approve the Implementation Plan or Quarterly Progress Report. These statements shall be made publicly available by each dissenting Participant on its website or collectively by all Participants on the CAT NMS Plan website.''[66]

Finally, the Commission is modifying the final sentence of proposed Section 6.6(c)(ii) to clarify which parties are obligated to file and make publicly available the Quarterly Progress Reports. The proposed amendments stated that the ''first of such reports shall be filed and made publicly available within 30 calendar days after the end of the calendar quarter in which the Implementation Plan was filed and made publicly available.''[67] The Commission is not changing this obligation, but is modifying the language to state that the ''Participants shall file and make publicly available the first of such reports within 30 calendar days after the end of the calendar quarter in which the Participants filed and made publicly available the Implementation Plan.''[68]

3. Additional Reports

The proposed amendments require that the Participants prepare, file, and publish an Implementation Plan for the completion of CAT implementation[69] and that the Quarterly Progress Reports provide up-to-date information regarding the Implementation Milestones set forth in the Implementation Plan. By these terms, the proposed amendments do not require the Participants to continue any reporting after the CAT has been implemented.

One commenter ''urge[d] the Commission to require the same timeline publication and quarterly reports on progress to apply beyond just the implementation phase.''[70] This commenter believed that ''[t]he same transparency requirements would be useful when the CAT NMS establishes upgrades schedules.''[71] The Commission believes that requiring additional reporting is unnecessary at this point. Once the CAT is fully implemented, market participants will continue to receive information regarding the operation of the CAT through audited financial statements published by the Participants[72] and CAT-related proposals filed with and published by the Commission.[73] The Commission is not requiring additional reporting, but encourages the Participants to communicate fully with affected market participants regarding any ''upgrades schedules.''

B. Amendments To Increase Financial Accountability

Currently, the CAT NMS Plan contemplates that the Operating Committee will establish, and the Participants will implement, fees for both Participants and Industry Members to recover the costs and expenses incurred by the Participants in connection with the development and implementation of the CAT.[74] The proposed amendments were designed to increase the financial accountability of the Participants by establishing target deadlines for four critical implementation milestones and reducing the amount of fee recovery that would be available to the Participants if those target deadlines are missed. Some commenters agreed that the proposed amendments would reduce the likelihood of further delays to CAT implementation, but all commenters urged the Commission to incorporate certain modifications to the proposal. After considering these comments, and as described more fully below, the Commission is adopting the financial accountability amendments with certain modifications from the amendments as proposed.

[63] For example, if the Participants filed and made public the Implementation Plan on August 15, 2020, the initial Quarterly Progress Report would have to be filed no later than October 30, 2020. *See* Proposing Release, *supra* note 2, at 48462 n.57.

[64] This change will provide the Participants with approximately eight or nine additional days, on average, to prepare, file, and publish each Report. *See id.* at 48462.

[65] *See* Proposing Release, *supra* note 2, at 48462–64.

[66] *See* Part II.A.1. *supra,* for further discussion of this modification.

[67] *See* proposed Section 6.6(c)(ii).

[68] These three modifications do not affect the cost estimates put forward by the Commission in the Proposing Release. *See, e.g.,* Proposing Release, *supra* note 2, at 48475–77.

[69] Specifically, proposed Section 6.6(c)(i) requires that the Implementation Plan include a timeline for achieving Full Implementation of CAT NMS Plan Requirements, which is a Financial Accountability Milestone that requires the Participants to ''have satisfied all of their obligations to build and implement the CAT, such that all CAT system functionality required by Rule 613 and the CAT NMS Plan has been developed, successfully tested, and fully implemented at the initial Error Rates specified by Section 6.5(d)(i) or less . . . .'' *See* proposed Section 1.1, ''Full Implementation of CAT NMS Plan Requirements.'' ''Error Rate'' is a defined term in the CAT NMS Plan and has the same definition in this release.

[70] *See* Better Markets Letter, at 7.

[71] *See id.*

[72] *See* CAT NMS Plan, *supra* note 1, at Section 9.2(a).

[73] *See* 15 U.S.C. 78s; 17 CFR 242.608.

[74] *See, e.g.,* CAT NMS Plan, *supra* note 1, at Section 11.1(c).

1. Description of the Proposed Amendments

Proposals for any fees established by the Operating Committee, and implemented by the Participants, to recover from Industry Members the costs and expenses incurred by the Participants in connection with the development and implementation of the CAT must be filed with the Commission and are subject to Commission review for consistency with the Exchange Act and Article XI of the CAT NMS Plan.[75] Specifically, each Participant must demonstrate, under Sections 6(b)(4) and 15A(b)(5) of the Exchange Act, that such fees result in an equitable allocation of reasonable dues, fees, and other charges among its members and other persons using its facilities.[76] The proposed amendments would not alter this basic structure, but add a new Section 11.6 to the CAT NMS Plan to govern the recovery of any fees, costs, and expenses (including legal and consulting fees, costs, and expenses) incurred by or for the Company in connection with the development, implementation, and operation of the CAT, from the effective date of this amendment, until such time that the Participants have completed Full Implementation of CAT NMS Plan Requirements[77] (collectively, the ''Post-Amendment Expenses'').

Proposed Section 11.6 would require the Participants to meet four Financial Accountability Milestones by certain dates in order to collect the full amount of any fees established by the Operating Committee, or implemented by the Participants, to recover Post-Amendment Expenses from Industry Members (''Post-Amendment Industry Member Fees''). Specifically, the proposed Financial Accountability Milestones and target deadlines were: (1) Initial Industry Member Core Equity Reporting, April 30, 2020[78]; (2) Full Implementation of Core Equity Reporting, December 31, 2020[79]; (3) Full Availability and Regulatory Utilization of Transactional Database Functionality[80]; and (4) Full Implementation of CAT NMS Plan Requirements.[81] Under the proposed amendments, each Financial Accountability Milestone would be considered complete as of the date identified in a published Quarterly Progress Report meeting the requirements of proposed Section 6.6(c).[82]

If the Participants meet the target deadline specified for each Financial Accountability Milestone, the terms of the proposed amendments would entitle them to collect the full amount[83] of any related Post-Amendment Industry Member Fees.[84] However, if the Participants do not meet the date specified for each Financial Accountability Milestone, the proposed amendments would reduce the amount of related Post-Amendment Industry Member Fees that the Participants may recover.[85] The proposed amendments set forth one recovery schedule for Initial Industry Member Core Equity Reporting and another recovery schedule for the remaining three Financial Accountability Milestones. Specifically, if the Participants miss the target deadline for Initial Industry Member Core Equity Reporting, the amount of related Post-Amendment Industry Member Fees that the Participants will be entitled to recover will immediately be reduced by 25 percent and then further reduced by 25 percent for every 60 days by which the Participants miss the target deadline.[86] If the Participants miss the target deadlines for the remaining three Financial Accountability Milestones, the amount of related Post-Amendment Industry Member Fees that the Participants will be entitled to recover for each Financial Accountability Milestone will immediately be reduced by 25 percent and then further reduced by 25 percent for every 90 days by which the Participants miss the target deadline.[87]

[75] 15 U.S.C. 78s(b); 17 CFR 242.608. *See also* CAT NMS Plan, *supra* note 1, at Section 11.1(b) (stating that the Participants must file proposed fees for Industry Members with the Commission); *id.* at Section 11.2(a) (stating that the Operating Committee shall seek to create transparent, predictable revenue streams for the Company that are aligned with the anticipated costs to build, operate, and administer the CAT and the other costs of the Company).

[76] *See* 15 U.S.C. 78f(b)(4) (applicable to the national securities exchanges); 15 U.S.C. 78*o*–3(b)(5) (applicable to FINRA, a national securities association).

[77] *See* note 69 *supra.*

[78] Under the proposed amendments, Initial Industry Member Core Equity Reporting was defined as ''the point at which Industry Members (excluding Small Industry Members that are not OATS reporters) have begun to report equities transaction data, excluding Customer Account Information, Customer-ID, and Customer Identifying Information, to the CAT.''

[79] Under the proposed amendments, Full Implementation of Core Equity Reporting was defined as ''the point at which: (a) Industry Member reporting (excluding reporting by Small Industry Members that are not OATS reporters) for equities transactions, excluding Customer Account Information, Customer-ID, and Customer Identifying Information, is developed, tested, and implemented at a 5 [percent] Error Rate or less and with sufficient intra-firm linkage, inter-firm linkage, national securities exchange linkage, and trade reporting facilities linkage to permit the Participants and the Commission to analyze the full lifecycle of an order across the national market system, excluding linkage of representative orders, from order origination through order execution or order cancellation; and (b) the query tool functionality required by Section 6.10(c)(i)(A) and Appendix D, Sections 8.1.1 [through] 8.1.3 and Section 8.2.1 incorporates the Industry Member equities transaction data described in condition (a) and is available to the Participants and to the Commission.''

[80] Under the proposed amendments, Full Availability and Regulatory Utilization of Transactional Database Functionality was defined as ''the point at which: (a) Reporting to the Order Audit Trail System is no longer required for new orders; (b) Industry Member reporting for equities transactions, simple electronic options transactions, manual options transactions, and complex options transactions, including Allocation Reports, but excluding Customer Account Information, Customer-ID, and Customer Identifying Information, is developed, tested, and implemented; (c) representative order linkages, as well as intra-firm linkages, inter-firm linkages, national securities exchange linkages, and trade reporting facilities linkages, are developed, tested, and implemented in a manner that permits the Participants and the Commission to analyze the full lifecycle of an order across the national market system, from order origination through order execution or order cancellation, including any related allocation information provided in an Allocation Report; (d) CAT Error Rates satisfy the threshold specified by Section 6.5(d)(i); (e) the query tool functionality required by Section 6.10(c)(i)(A) and Appendix D, Sections 8.1.1 [through] 8.1.3, Section 8.2.1, and Section 8.5 incorporates the data described in conditions (b) and (c) and is available to the Participants and to the Commission; and (f) the requirements of Section 6.10(a) are met.''

[81] Under the proposed amendments, Full Implementation of CAT NMS Plan Requirements was defined as ''the point at which the Participants have satisfied all of their obligations to build and implement the CAT, such that all CAT system functionality required by Rule 613 and the CAT NMS Plan has been developed, successfully tested, and fully implemented at the initial Error Rates specified by Section 6.5(d)(i) or less, including functionality that efficiently permits the Participants and the Commission to access all CAT Data required to be stored in the Central Repository pursuant to Section 6.5(a), including Customer Account Information, Customer-ID, Customer Identifying Information, and Allocation Reports, and to analyze the full lifecycle of an order across the national market system, from order origination through order execution or order cancellation, including any related allocation information provided in an Allocation Report.'' *See also* Proposing Release, *supra* note 2, at 48466–470, for additional discussion of the Financial Accountability Milestones and the associated target deadlines.

[82] *See* proposed Section 1.1; proposed Section 6.6(c)(ii)–(iii).

[83] ''Full amount'' in this context does not mean that the Participants may collect all of their Post-Amendment Expenses from Industry Members. Rather, to recover any Post-Amendment Expenses from Industry Members, the Participants must file with the Commission proposed rule changes. The Commission will then review the proposed rule changes for consistency with the Exchange Act and the CAT NMS Plan.

[84] *See* proposed Section 11.6(a)(i).

[85] *See* proposed Section 11.6(a)(ii) through (iii).

[86] *See* proposed Section 11.6(a)(ii).

[87] *See* proposed Section 11.6(a)(iii). *See* Proposing Release, *supra* note 2, at 48470–72, for additional discussion of these provisions. The proposed amendments also provide that the Participants will only be permitted to collect any Post-Amendment Industry Member Fees at the end of the period associated with each respective Financial Accountability Milestone. *See* proposed Section 11.6(a)(iv); *see also* Proposing Release,

Continued

Finally, the proposed amendments include a provision that would require the Participants to clearly indicate, in all proposals filed with the Commission to establish or implement Post-Amendment Industry Member Fees, whether such fees are related to Post-Amendment Expenses and how the Post-Amendment Expenses are related to a particular Financial Accountability Milestone.[88]

2. Modifications to the Proposed Amendments

The Commission believes that applying the above-described conditions, with the modifications set forth below,[89] to the Participants' collection of Post-Amendment Industry Member Fees is appropriate. As explained above, proposals for any fees established by the Operating Committee, and implemented by the Participants, to recover the fees, costs, and expenses incurred by the Participants in connection with the development, implementation, and operation of the CAT must be filed with the Commission. These fee proposals are then subject to Commission review for consistency with Article XI of the CAT NMS Plan and the Exchange Act[90]—including Sections 6(b)(4) and 15A(b)(5) of the Exchange Act, which require that each Participant make an equitable allocation of reasonable dues, fees, and other charges among its members and other persons using its facilities.[91] In light of the Participants' delays in implementation of the CAT NMS Plan, the Commission does not believe it would be reasonable for the Participants to exercise their funding authority under the CAT NMS Plan or the Exchange Act if the Participants do not meet the target deadlines specified by the amendments.[92]

The amendments, as proposed, were designed to prevent further delays to CAT implementation, but the Commission is adopting three modifications to the proposed amendments to address certain practical concerns that were identified by the Commission following the publication of the Proposing Release.

First, the Commission is modifying the first Financial Accountability Milestone, Initial Industry Member Core Equity Reporting, and the fee recovery schedule associated with that Financial Accountability Milestone. The Commission believes that this proposed Financial Accountability Milestone should be updated. The proposed target deadline for this Financial Accountability Milestone—April 30, 2020—has passed. Moreover, as noted above, the Commission granted exemptive relief allowing the Participants' Compliance Rules for Industry Member reporting to the CAT to extend the deadline for core equity reporting to June 22, 2020.[93] The targeted deadline for the proposed Initial Industry Member Core Equity Reporting milestone is therefore no longer appropriate, but the Commission still believes that it is important to include an initial Financial Accountability Milestone that requires the Participants to develop, test, and implement the essential infrastructure needed to support Industry Member reporting—one of the major goals identified by the CAT NMS Plan.[94]

Accordingly, the Commission is modifying the first Financial Accountability Milestone. Section 1.1 of the CAT NMS Plan will now define ''Initial Industry Member Core Equity and Option Reporting'' as the reporting by Industry Members (excluding Small Industry Members[95] that do not report to the Order Audit Trail System (''OATS'')) of both: (a) Equities transaction data, excluding Customer Account Information, Customer-ID, and Customer Identifying Information,[96] to the CAT;[97] and (b) options transaction data, excluding Customer Account Information, Customer-ID, and Customer Identifying Information, to the CAT.[98] This Financial Accountability Milestone shall be considered complete as of the date identified in a published Quarterly Progress Report meeting the requirements of proposed Section 6.6(c). The Commission is also modifying proposed Section 11.6(a)(i)(A) to provide that the target deadline for the Initial Industry Member Core Equity and Option Reporting milestone is July 31, 2020.[99]

The Commission believes that this Financial Accountability Milestone is appropriate because it is designed to achieve the goals of the proposed Initial Industry Member Core Equity Reporting milestone. As the Commission noted in the Proposing Release, before Industry Members may begin reporting data to the CAT, the Participants must develop, and Industry Members must thoroughly test, file submission tools, data integrity controls, and various security measures to ensure that the CAT can safely receive and process this data, as well as identify data that may not be accurate. These are core operations that are fundamental to the success of the CAT.[100] By requiring Industry Members—excluding Small Industry Members that are not OATS reporters[101]—to report the first phase of equities and simple electronic options data to the CAT, the Initial Industry Member Core Equity and Option Reporting milestone will continue to require the Participants to demonstrate that they have made significant progress towards implementing foundational CAT functionality.

Moreover, the Commission believes that this Financial Accountability Milestone, as modified, accounts for the additional amount of time that the Participants will now be given to achieve the first Financial Accountability Milestone. The Participants will now have to begin Industry Member reporting of the first phase of simple electronic options data to the CAT, in addition to satisfying the previous requirements of the proposed Initial Industry Member Core Equity

supra note 2, at 48471–72, for additional discussion of this provision.

[88] *See* proposed Section 11.6(b); *see also* Proposing Release, *supra* note 2, at 48472, for additional discussion of this provision.

[89] *See* notes 93–109 *infra,* for a discussion of the modifications to the proposed amendments.

[90] 15 U.S.C. 78s(b); 17 CFR 242.608.

[91] *See* 15 U.S.C. 78f(b)(4) (applicable to the national securities exchanges); 15 U.S.C. 78*o*–3(b)(5) (applicable to FINRA, a national securities association).

[92] *See* Proposing Release, *supra* note 2, at 48466, 48472, for additional discussion.

[93] *See* notes 8–13 and associated text *supra,* for a discussion of the Exemptive Relief Order.

[94] *See* CAT NMS Plan, *supra* note 1, at Section 6.7(a)(v).

[95] ''Small Industry Member'' is a defined term in Section 1.1 of the CAT NMS Plan and has the same definition in the context of this adopting release.

[96] Customer Account Information, Customer-ID, and Customer Identifying Information are defined terms in Section 1.1 of the CAT NMS Plan and have the same definitions in the context of this adopting release.

[97] The equities transaction data required at this stage is consistent with the functionality that the Participants describe on the CAT NMS Plan website as ''Production Go-Live for Equities 2a file submission and data integrity validations.'' *See https://catnmsplan.com/timeline/phase.*

[98] The options transaction data required at this stage is consistent with the functionality that the Participants describe on the CAT NMS Plan website as ''Production Go-Live for Options 2b file submission and data integrity validations.'' *See id.*

[99] The target deadline for this Financial Accountability Milestone falls between scheduled Quarterly Progress Reports. If the Participants wait to submit the Quarterly Progress Report to the Commission, it may delay their ability to begin recovering any Post-Amendment Industry Member Fees to which they may be entitled. In order to expedite their recovery of Post-Amendment Industry Member Fees, the Participants may file an interim Quarterly Progress Report, if they so choose, on the day they achieve this Financial Accountability Milestone (or any other Financial Accountability Milestone). *See* Proposing Release, *supra* note 2, at 48466 n.79.

[100] *See* Proposing Release, *supra* note 2, at 48466.

[101] The Commission continues to believe that it is appropriate to exclude Small Industry Members that do not report to OATS from this Financial Accountability Milestone in order to mirror the exemptive relief granted to the Participants. *See, e.g.,* Exemptive Relief Order, *supra* note 8, at 23082.

Reporting milestone. Recent timelines published by the Participants indicate that the production environment for Industry Member equities transaction reporting went live on April 13, 2020,[102] and the Participants have indicated that Industry Member reporting for the first phase of simple electronic options data will begin on July 20, 2020.[103] The Commission therefore believes that the modified target deadline of July 31, 2020, for the Initial Industry Member Core Equity and Option Reporting milestone is reasonable and feasible.

Second, the Commission is also modifying the fee recovery schedule associated with the first Financial Accountability Milestone to reflect the new target deadline.[104] Accordingly, if the Participants do not meet the specified date for the achievement of Initial Industry Member Core Equity and Option Reporting, Section 11.6(a)(ii) will provide that the Participants' recovery of Post-Amendment Industry Member Fees will be reduced according to the following schedule:

- By 25 percent if the Participants miss the deadline set forth in Section 11.6(a)(i)(A) by less than 45 days;
- By 50 percent if the Participants miss the deadline set forth in Section 11.6(a)(i)(A) by more than 45 days, but less than 90 days;
- By 75 percent if the Participants miss the deadline set forth in Section 11.6(a)(i)(A) by more than 90 days, but less than 135 days; and
- By 100 percent if the Participants miss the deadline set forth in Section 11.6(a)(i)(A) by more than 135 days.

The Commission believes this fee recovery schedule is appropriate due to the new target deadline of July 31, 2020. It is critically important that the Participants remain on schedule to achieve the first Financial Accountability Milestone, in order to minimize the possibility that the deadlines for subsequent Financial Accountability Milestones will be missed.[105] Moreover, as explained above, the Commission believes that the Participants should be able to meet the target deadline.

Third, the Commission is modifying the Full Availability and Regulatory Utilization of Transaction Database Functionality milestone to eliminate certain error rate requirements. The proposed amendments would have required the Participants to achieve the initial error rates specified by the CAT NMS Plan for Industry Member reporting of manual and complex options transactions, as well as any options allocation information, by December 31, 2021,[106] in order to satisfy the Full Availability and Regulatory Utilization of Transaction Database Functionality milestone. However, the Participants estimate that these functionalities will not be fully implemented until December 13, 2021.[107] Because these functionalities are estimated to be implemented within the same month as the targeted date for satisfying the Full Availability and Regulatory Utilization of Transaction Database Functionality milestone, upon review, the Commission believes it is not appropriate to require such error rates for purposes of financial recovery.[108] The Commission is not modifying any other aspects of this Financial Accountability Milestone; the Participants will still be required to implement the functionality as proposed—namely, reporting of manual and complex options transactions and options allocation information—but they will not be required to satisfy any error rate requirement for these functionalities. The Participants will also still be required to achieve the initial error rate specified by the CAT NMS Plan for Industry Member reporting of equities and simple electronic options transactions, excluding Customer Account Information, Customer-ID, and Customer Identifying Information, with all required linkages (including representative order linkages and equities allocation information) to permit the Participants and the Commission to analyze the full lifecycle of an order across the national market system, from order origination through order execution or order cancellation.[109]

3. Discussion of the Comments

Most commenters agreed with the Commission that increasing the financial accountability of the Participants will help to prevent further delays to CAT implementation. One commenter, for example, ''support[ed] the Commission'[s] actions to . . . have formal deadlines to assist member firms' [CAT] implementation planning . . . and set financial incentives to avoid further delays.'' [110] Another commenter ''agree[d] with the Commission that additional Participant Accountability Milestones should facilitate the completion of the implementation phase(s) of CAT in an efficient, expeditious and risk-averse manner, thereby reducing the risk of further delay.'' [111] Finally, one commenter stated that ''imposing financial accountability measures on CAT NMS should increase the likelihood of the CAT's implementation.'' [112]

However, commenters raised concerns regarding aspects of the proposed amendments. These concerns generally fell into four categories: (a) Threshold questions regarding the CAT funding model; (b) the potential negative impact of the proposed amendments; (c) the fairness of the proposed amendments; and (d) the possibility of unforeseen, but reasonable, delays. As discussed in more detail below, the Commission does not believe that it is necessary to modify the proposed amendments to address these concerns. Nevertheless, as discussed above, the Commission is adopting two modifications to the proposed amendments to account for certain practical issues that were separately identified by the Commission,[113] and it is possible that these modifications may also alleviate some of the concerns expressed by commenters.

[102] *See https://www.catnmsplan.com/announcements/cat-now-open-reporting-broker-dealers.*

[103] *See id.*

[104] In addition, the Commission is modifying the text of proposed Sections 11.6(a)(ii) and (iii) to add more granular citations and text that will further clarify which fee recovery schedule applies to which Financial Accountability Milestone. The Commission is not modifying the fee recovery schedule for the Full Implementation of Core Equity Reporting milestone, the Full Availability and Regulatory Utilization of Transactional Database Functionality milestone, or the Full Implementation of CAT NMS Plan Requirements milestone.

[105] *See also* Proposing Release, *supra* note 2, at 48470–72, for further discussion of the fee recovery schedules.

[106] *See id.; see also* Proposing Release, *supra* note 2, at 48468–69, for additional discussion of the proposed Financial Accountability Milestone.

[107] *See* note 97 *supra; see also* Securities Exchange Act Release No. 87990 (January 16, 2020), 85 FR 3963 (January 23, 2020) (pending proposed rule change that indicates, among other things, that such functionality will not be implemented until December 13, 2021). The Commission does not believe that this modification will significantly impact the Commission's goals for this Financial Accountability Milestone. When the Participants achieve this milestone, regulators will still have access to sufficiently accurate and reliable equities and simple electronic options transactional data and order linkages that will enable regulators to analyze the full lifecycle of an order and conduct new and sophisticated analyses of the markets, including options market reconstruction and cross-market analyses across full order lifecycles. *See* Proposing Release, *supra* note 2, at 48468–69.

[108] The CAT NMS Plan, however, still requires an initial error rate of 5 percent. *See* CAT NMS Plan, *supra* note 1, at Section 6.5(d)(i).

[109] *See* Section 1.1, ''Full Availability and Regulatory Utilization of Transactional Database Functionality.''

[110] *See* SIFMA Letter, at 1.

[111] *See* FIF Letter, at 2.

[112] *See* Better Markets Letter, at 3 (stating that the ''key milestones outlined in the Proposed Amendment are good measures that the Participants are making progress toward delivering a completed CAT'').

[113] *See* Part II.B.2. *supra.*

a. Comments on the CAT Funding Model

Commenters raised threshold questions regarding the Participants' ability to recover from Industry Members a portion of the fees, expenses, and costs incurred by the Participants in connection with the development, implementation, and operation of the CAT. For instance, one commenter stated that the ''Plan Participants have not provided justification for imposing fees on broker-dealers for the CAT[] that will be in addition to fees the Plan Participants already charge broker-dealers for regulatory funding.'' [114] Another commenter observed that ''broker-dealers already provide the [Participant]s a significant amount of regulatory funding'' and suggested that ''there should be no new fee for the CAT until member firms are provided with a fully-documented account of how regulatory fees are currently allocated, how the CAT fee fits into the existing regulatory framework, and why assessing broker-dealers an additive regulatory fee is necessary to fund the creation and operation of the CAT.'' [115] This commenter further asserted that ''broker-dealers should not be required to reimburse the [Participant]s for any part of the costs or expenses of the CAT other than the direct costs to build and operate the system itself,'' such as ''third-party support fees (historical legal fees, consulting fees, and audit fees), operational reserve, and insurance costs,'' or for ''any payments made to Thesys in connection with the CAT.'' [116]

These concerns were raised by commenters and addressed by the Commission when it approved the CAT NMS Plan,[117] which explicitly permits the Participants to recover from Industry Members a portion of the fees, expenses, and costs incurred to build, operate, and administer the CAT and the other costs of the Company.[118] After considering these concerns, the Commission approved the funding model set forth in the CAT NMS Plan because the Commission believed that it reflected a ''reasonable exercise of the Participants' funding authority . . .'' [119] The Commission stated that the CAT was a ''regulatory facility jointly owned by the Participants,'' that the ''Exchange Act specifically permits the Participants to charge members fees to fund their self-regulatory obligations,'' and that the funding model was ''designed to impose fees reasonably related to the Participants' self-regulatory obligations because the fees would be directly associated with the costs of establishing and maintaining the CAT, and notunrelated . . . services.'' [120]

Even though the amendments reflect the Commission's view as to how the Participants may reasonably exercise their funding authority under the Exchange Act and the CAT NMS Plan,[121] the Commission still believes that the overall structure of the CAT funding model is appropriate. The CAT continues to be a ''regulatory facility jointly owned by the Participants,'' the Exchange Act continues to ''permit[] the Participants to charge members fees to fund their self-regulatory obligations'' if those fees are reasonable, and the funding model continues to be ''designed to impose fees reasonably related to the Participants' self-regulatory obligations because the fees would be directly associated with the costs of establishing and maintaining the CAT, and not unrelated . . . services.'' [122] The Commission therefore is not modifying the proposed amendments (or the CAT NMS Plan) on these grounds. However, the Commission stresses that it is not hereby approving any specific Post-Amendment Industry Member Fees; rather, such fee proposals must be filed with the Commission by the Participants, published for public comment, and assessed by the Commission for consistency with the Exchange Act and the CAT NMS Plan.[123]

b. Comments on the Potential Negative Impact of the Proposed Amendments

A few commenters believed that ''strict adherence to the Participants' delivery of specified target milestone[s] on or before particular dates (and sanctions imposed as a result of not meeting those dates) are likely to result in lower quality deliverables and an incomplete CAT Repository.'' [124] One commenter specifically identified a ''subset'' of the number of potential negative consequences of this approach, including: ''1) Reduced dialogue between industry member CAT Reporters and the Participants; 2) lower quality CAT IM Tech Specs; 3) reduced emphasis on the development and publication of vital industry member guidance . . .; 4) a less effective issue resolution process; and 5) the implementation of Phase 2a prior to the full development of the CAT system.'' [125] In short, the commenter believed that the ''financial penalty structure outlined in the Proposed Amendments has the clear potential to limit and short circuit the required cooperative analysis, feedback, and iterative update process that would result in the reduced quality of deliverables and place at risk CAT's key regulatory goals.'' [126] Accordingly, this commenter suggested that the Commission should essentially delete the target deadlines, but retain the requirement to complete such milestones.[127] Specifically, this commenter stated that the Commission should perform a ''holistic assessment of the Participants[′] management of CAT implementation . . . based upon: 1) the successful completion of milestones; 2) detail contained in Participant Quarterly Progress Reports; . . . 3) industry member feedback [to supplement the information obtained from Quarterly Progress Reports],'' and 4) ''engagement with the Operating Committee and Plan Processor to better gauge whether the Participants are meeting the obligations delegated to them by the Commission,'' instead of ''strict adherence to enumerated milestone target dates.'' [128] In the alternative, ''[s]hould the Commission

[114] *See* Fidelity Letter, at 5.

[115] *See* SIFMA Letter, at 2.

[116] *See id.* at 3.

[117] *See, e.g.,* CAT NMS Plan Approval Order, *supra* note 1, at 84793–95.

[118] *See* CAT NMS Plan, *supra* note 1, at Article XI.

[119] *See* CAT NMS Plan Approval Order, *supra* note 1, at 84794.

[120] *See id.*

[121] *See* notes 89–92 and associated text *supra.*

[122] *See id.*

[123] *See id.*

[124] *See* FIF Letter, at 3. *See also* Participant Letter, at 10 (''Faced with financial penalties for missed deadlines, the Participants may not be able to fully address legitimate industry concerns or accommodate requests for delays with respect to future deadlines.''); Fidelity Letter, at 5 (''We also recognize that despite best efforts, unforeseen circumstances may occur where it may be in the collective best interest to extend a target deadline. In these circumstances, we believe that financial penalties will create a degree of friction in the development process that is not conducive to the overall success of the CAT and that may prioritize rushing to complete a target deadline over a long-term view of the CAT.'').

[125] *See* FIF Letter, at 3, 7. This commenter also recommended adjusting interim deadlines set by the Participants for certain phases of CAT implementation. *See id.* at 5–6 and Appendix B. The Commission does not believe such adjustments are necessary, as the Commission believes the current timeline is appropriate and feasible. However, because such changes could be made without impacting the target deadlines for the Financial Accountability Milestones, the Participants can decide to make the recommended changes.

[126] *See id.* at 7–8.

[127] *See id.* at 4. *See also* Participant Letter, at 9 (arguing that the Financial Accountability Milestones ''should be revised so that CAT LLC may collect Post-Amendment Industry Member Fees so long as CAT LLC and the Participants have completed development and testing and made available to Industry Members and the SEC the CAT functionality applicable to a particular Milestone'').

[128] *See* FIF Letter, at 6, 8.

approve and adopt the proposed Plan Amendment to incorporate Financial Accountability Milestones,'' the commenter believed that the Commission and the Participants should ''take measures to *ensure* that the high degree of collaboration between the industry, Participants, and the Plan Processor remains in place.'' [129]

The Commission does not believe that it is appropriate or necessary to eliminate the target deadlines from the proposed amendments, as suggested by some commenters. The proposed amendments were not designed only to achieve CAT implementation, but, more specifically, to achieve CAT implementation in a timely manner. It has been over three years since the Commission approved the CAT NMS Plan, and the need for a better audit trail system remains urgent. Accordingly, the Commission included target deadlines in the proposed amendments as one measure to reduce the likelihood of additional delays to CAT implementation. To remove these target deadlines from the proposed amendments, or to eliminate the financial incentives associated with the target deadlines, would fundamentally undercut the goal of the Commission in promulgating the proposed amendments—namely, the implementation of the CAT in a reasonable time frame.

Although the Commission is sensitive to commenters' concerns regarding the potential for ''lower quality deliverables'' due to any perceived possibility of reduced collaboration,[130] the proposed amendments do not alter the fundamental obligations of the Participants, Industry Members, and Plan Processor to deliver CAT functionality in a manner that complies with the CAT NMS Plan.[131] Nor do the proposed amendments alter or weaken requirements set forth in the CAT NMS Plan to facilitate collaboration and communication between the Participants and Industry Members.[132] The Commission therefore does not expect the quality of CAT implementation to be adversely affected by the proposed amendments. Accordingly, the Commission is not modifying the proposed financial accountability amendments.

c. Comments on the Fairness of the Proposed Amendments

Commenters expressed views regarding the fairness of the proposed amendments' conditions on financial recovery. ''If the Participants miss a proposed target deadline,'' one Industry Member commenter ''generally [did] not believe that it [would be] reasonable for the Plan Participants to fully recover fees, costs, and expenses from Industry Members, because further delays by Plan Participants will impose additional costs on Industry Members.'' [133]

The Participants, on the other hand, believed that the proposed amendments were ''inappropriate and unfair,'' because the ''ability of CAT LLC and the Participants to collect Post-Amendment Industry Member Fees should turn only on the timely completion of those tasks that are within their control.'' [134] For instance, the Participants objected to the fact that several of the proposed Financial Accountability Milestones require the achievement of the initial error rates specified by the CAT NMS Plan. The Participants stated that ''achieving an error rate of five percent or less involves factors that are beyond their control,'' because the ''ability and willingness of Industry Members to devote sufficient resources to accurately and timely report CAT events . . . will impact initial and subsequent error rates.'' [135] Similarly, the Participants stated that the requirements contained in several of the proposed Financial Accountability Milestones regarding intrafirm and interfirm linkages ''rel[y], in part, on the quality of the data reported to CAT by Industry Members.'' [136] The Participants expressed concern that, ''by conditioning the ability of CAT LLC and the Participants to collect Post-Amendment Industry Member Fees on factors dependent on the efforts of Industry Members, the Commission's proposals inadvertently establish a perverse incentive for Industry Members to devote less than maximum efforts to comply with their obligations related to the CAT as they will pay less fees in such instances.'' [137]

The Participants stated that the proposed Full Availability and Regulatory Utilization of Transactional Database Functionality milestone could not be met unless OATS reporting was no longer required for new orders, which was another example of how the proposed amendments were ''inappropriate and unfair.'' [138] The Participants asserted that achieving this requirement ''depends upon a variety of factors outside the control of the Participants, including accurate reporting by Industry Members and FINRA's determination to retire OATS.'' [139] According to the Participants, FINRA has indicated that ''the CAT would generally need to achieve a sustained error rate for Industry Member reporting in a number of categories for a period of at least 180 days of 5[percent] or lower, measured on a pre-correction or as-submitted basis, and 2[percent] or lower on a post-correction basis'' before OATS could be safely retired, because a minimum of 180 days was necessary ''to confirm that the Plan Processor is meeting its obligations and performing its functions adequately'' and material issues ''may manifest themselves only after surveillance patterns and other queries have been run and analyzed . . . .'' [140] Insofar as the ''premature cessation of OATS before CAT data quality levels are acceptable . . . would expose the market to unnecessary risks because market surveillance would be compromised,'' the Participants believed that no ''hard and fast

[129] *See id.* at 7.

[130] One commenter also expressed concern that the proposed amendments might result in ''the implementation of Phase 2a prior to the full development of the CAT system.'' *See id.* at 3. The Participants are already pursuing an implementation plan that implements the CAT in phases and that will result in ''Phase 2a'' being implemented ''prior to the full development of the CAT system.'' The amendments have no effect on this plan.

[131] *See* note 145 and associated text *infra,* for a discussion of the Industry Members' obligations to comply with the CAT NMS Plan.

[132] *See, e.g.,* CAT NMS Plan, *supra* note 1, at Appendix D, Section 10.1 through 10.3 (detailing the support to be provided by the Plan Processor to CAT reporters and CAT users). Many of these measures have already been implemented by the Participants. *See, e.g.,* notes 142–144 and associated text *supra.*

[133] *See* Fidelity Letter, at 5.

[134] *See* Participant Letter, at 8–9.

[135] *See id.* at 9.

[136] *See id.*

[137] *See id.* Another commenter also expressed concern that the proposed amendments ''would be subject to gaming by Industry Members who stand to benefit from delays, but [who] would not suffer the consequences of the delays they cause.'' *See* Better Markets Letter, at 8. This commenter suggested that the proposed financial accountability amendments be ''equally applied to Plan Participants as well as those Industry Members who contribute to any delay'' and specifically recommended the adoption of a reporting mechanism that would enable the Commission to determine which parties were responsible for causing or contributing to a delay. *See id.* at 3, 8–9. The Commission continues to believe that it is appropriate to impose the obligations of the financial accountability amendments solely on the Participants for the reasons discussed below. *See* the discussion at notes 142–148 and associated text *infra.* Accordingly, the Commission is not adopting the reporting mechanism proposed by this commenter.

[138] *See* Participant Letter, at 9; *see also* proposed Section 1.1, ''Full Availability and Regulatory Utilization of Transactional Database Functionality.''

[139] *See* Participant Letter, at 9.

[140] *See id.* at 10–11.

deadline'' should be set for the retirement of OATS.[141]

Despite their concerns, the Participants have the ability to shape the reporting behavior of Industry Members, including the quality of data reported by Industry Members, through various mechanisms, including through the development of CAT technical specifications with Industry Members via the Technical Specifications Working Group,[142] through the creation of a help desk for Industry Members to provide assistance with any technical issues that may arise,[143] through the production of tools that will enable Industry Members to identify and correct errors,[144] and through general industry outreach, provided in the form of FAQs, webinars, or other additional training for Industry Members. In addition, while the Commission expects Industry Members to comply with their reporting obligations under the CAT NMS Plan, the Participants have tools to require such compliance—including Compliance Rules that will set forth a phased reporting schedule according to the timeline detailed in the Exemptive Relief Order.[145] Industry Members should have a strong economic incentive to cooperate with the Participants' efforts.[146] Until the CAT is sufficiently developed so as to permit the retirement of OATS, most Industry Members will have to report both to OATS and to the CAT, and prolonging the implementation of the CAT would expand the dual reporting costs that these Industry Members will have to bear.[147] For these reasons, and for the reasons set forth in the Proposing Release,[148] the Commission continues to believe that it is appropriate to impose the conditions of the amendments solely on the Participants.

The Participants' comment letter was particularly focused on proposed conditions related to error rates, but the Commission believes that these conditions are appropriate. The proposed Financial Accountability Milestones that include error rate requirements do not impose any requirements that are more onerous than initial error rate requirements already set forth in the CAT NMS Plan.[149] The Participants have, in the past, indicated that these initial error rate requirements are appropriate, because they ''strike[] the balance of making allowances for adapting to a new reporting regime while ensuring that the data provided to regulators will be capable of being used to conduct surveillance and market reconstruction.'' [150] Furthermore, because the Participants have chosen to implement Industry Member reporting in phases,[151] the Commission generally believes it is appropriate to require the Participants to satisfy the initial error rates set by the CAT NMS Plan for each phase that has been completed. This approach, reflected in the proposed amendments, as modified, only requires the Participants to focus on data quality for functionality that has been fully implemented for some time, not on those elements of the CAT that may still be in development or that have been newly implemented.

Moreover, the Commission believes that the amendments, as modified, give the Participants ample time to achieve the required error rates. With respect to the Full Implementation of Core Equity Reporting Requirements milestone, the Participants are currently estimating, and the Commission believes, that the required Industry Member reporting and linkages will be fully implemented by October 26, 2020.[152] The Participants will therefore have more than two months to achieve the required error rate by the target deadline for this Financial Accountability Milestone, which is December 31, 2020.[153] The next Financial Accountability Milestone, the Full Availability and Regulatory Utilization of Transactional Database Functionality milestone, as modified, requires the Participants to sustain the error rates achieved for the previous milestone and to achieve the same requirements for simple electronic options transaction data, representative order linkages, and equities allocation information by December 31, 2021. The Participants are currently estimating that the required options functionality will be implemented by January 4, 2021 [154] and that the representative order linkage and allocation information functionality will be implemented by April 26, 2021.[155] Therefore, the Commission believes that the Participants should have sufficient time to satisfy those error rate requirements. Likewise, the Commission believes the target deadline for the Full Implementation of CAT NMS Plan Requirements milestone provides the Participants with sufficient time to achieve the required error rates. The Participants currently estimate that the CAT will be fully implemented by July 11, 2022.[156] The amendments, as modified, therefore give the Participants approximately five months to achieve the required error rates,[157] which the Commission believes is an appropriate amount of time to address any issues with the final phases of CAT implementation.[158]

[141] *See id.* at 11.

[142] *See* Event Materials, including recorded Q&A sessions with the Technical Specifications Working Group and market participants, *available at https://catnmsplan.com/events/materials. See also* Participant Letter, at 2 (detailing efforts made to liaise with Industry Members on ''Industry Member reporting, CAT onboarding, connectivity, security and other topics related to the CAT'').

[143] *See* Participant Letter, at 2. Contact information for the help desk can be found at *https://catnmsplan.com/contact.*

[144] *See, e.g.,* CAT NMS Plan, *supra* note 1, at Appendix D, Section 10.1 (requiring the Plan Processor to develop tools to allow each CAT reporter to identify and correct errors and to provide daily reporting statistics to each CAT reporter).

[145] *See, e.g.,* CAT NMS Plan, *supra* note 1, at Section 3.11 (requiring the Participants to enforce compliance with the CAT NMS Plan by promulgating compliance rules for Industry Members); *id.* at Section 6.4 (indicating that data reporting requirements for Industry Members will be enforced through the Participants' compliance rules); *id.* at Section 6.7 (indicating that Industry Member data reporting deadlines will be enforced through the Participants' compliance rules). With respect to these compliance tools, one commenter expressed concern that, ''if there are legitimate reasons that broker-dealers have not been able to deliver a 5[percent] error rate, and the [Participants] believe they will be financially penalized for a too-high error rate, then the [Participants] will be incentivized to bring enforcement actions against broker-dealers solely for the purpose of recouping the lost funding.'' *See* SIFMA Letter, at 2. However, any enforcement action brought by the Participants must comply with the Exchange Act, the rules promulgated thereunder, and their own rules.

[146] *See, e.g.,* SIFMA Letter, at 2 (stating that Industry Members are ''committed to a timely implementation of CAT reporting'').

[147] *See* note 286 and associated text *infra.*

[148] *See, e.g.,* Proposing Release, *supra* note 2, at 48459–460.

[149] *Cf., e.g.,* CAT NMS Plan, *supra* note 1, at Section 6.5(d)(i) (''The initial maximum Error Rate shall be set to 5[percent].''), and proposed Section 1.1, ''Full Implementation of CAT NMS Plan Requirements'' (requiring the CAT to be ''fully implemented at the initial Error Rates specified Section 6.5(d)(i) or less'').

[150] *See* CAT NMS Plan Approval Order, *supra* note 1, at 84717.

[151] *See, e.g.,* Exemptive Relief Order, *supra* note 8.

[152] *See* note 97 *supra.*

[153] *See also* Proposing Release, *supra* note 2, at 48468.

[154] *See* note 97 *supra.*

[155] *See* Exemptive Relief Order, *supra* note 8, at 23081.

[156] *See id.*

[157] The Participants should have more than a year to achieve some of the required error rates, as the modified Full Availability and Regulatory Utilization of Transactional Database Functionality milestone would require the Participants to implement Industry Member reporting of manual and complex options transaction data, with options allocation information, by December 31, 2021, consistent with the Participants' current projections. *See id.*

[158] *See* Proposing Release, *supra* note 2, at 48470. The Participants will be required to implement Industry Member reporting of Customer Account Information, Customer-ID, and Customer Identifying Information to achieve Full

The Commission also does not believe that it is necessary to modify the proposed amendments to address the Participants' concerns regarding OATS retirement. The Participants have stated that Industry Member reporting for equities data inclusive of OATS reporting will be fully implemented by October 26, 2020.[159] Consequently, the modified amendments will give the Participants approximately fourteen months to meet the required error rate for equities data and retire OATS. The Commission believes that this is a sufficient amount of time to achieve these goals, based on FINRA's representations regarding the amount of time it would take to retire OATS.[160] If the Participants complete the Full Implementation of Core Equity Reporting Requirements milestone by the target deadline for that Financial Accountability Milestone, the Participants will already have achieved the 5 percent error rates required for equities transaction data reported by Industry Members by December 31, 2020.[161] The Participants will then have far more than 180 days in which to achieve the ''5[percent] or lower, measured on a pre-correction or as-submitted basis, and 2[percent] or lower on a post-correction basis,'' error rates that may be required by FINRA to retire OATS.[162] Accordingly, the Commission does not believe any further modifications to these amendments are appropriate or necessary.

d. Comments on the Possibility of Unforeseen, But Reasonable, Delays

Several commenters recommended that the Commission adopt a more flexible approach that could account for the possibility of reasonable delays to CAT implementation. For example, one commenter stated that the ''completion of current and upcoming CAT implementation milestones are all contingent on several challenging and aggressive deliverables, many of which will impact the development, testing, and roll-out of complex technology . . . .'' [163] This commenter believed that ''factors outside of the Participants' and/or Plan Processor's control may require the regulators to revisit the reasonableness and viability of implementation milestones to preserve the ultimate delivery of a useable CAT in a reasonable timeframe.'' [164] Accordingly, this commenter recommended that the Commission ''include provisions to the Proposed Amendments that allow, after the holistic assessment of all factors impacting the Participants' ability to meet a particular milestone date, flexibility to extend milestone dates without holding Participants directly accountable (financially or otherwise).'' [165]

Another commenter requested that ''the amendments to the CAT NMS Plan include a formal mechanism to address potential delays in CAT implementation that may arise for legitimate reasons,'' ''due to a reasonable need for delay or to factors beyond anyone's control.'' [166] This commenter suggested that the ''mechanism could be a similar process to the proposed publications of the implementation plan—approval from each [Participant]'s senior officer and vote by the Operating Committee,'' as such a mechanism ''would serve the purpose of completing the CAT in a timely manner while taking into account the operational complexity of the CAT implementation process.'' [167] This commenter also ''recommended that the Commission take reasonable delays into account in imposing the proposed financial penalties,'' perhaps by ''suspending the proposed financial penalties based on the cause, foreseeability and attempts to mitigate the impact of the delay.'' [168]

Although it is sensitive to the concerns expressed by commenters, the Commission is adopting a mechanism that would not allow further delays to occur without consequence. The Participants have already missed the Commission-approved deadlines set forth in the CAT NMS Plan.[169] The Participants are responsible for timely CAT implementation, including selecting and managing the Plan Processor, and the process is fundamentally within their control.[170] Delays to CAT implementation have serious consequences; they prevent regulators and market participants from reaping the regulatory benefits of the CAT, as well as potentially increase costs for Industry Members attempting to comply with the Participants' projected timelines.[171] However, the Commission has the authority to grant exemptive relief from any requirement associated with a particular Financial Accountability Milestone.[172] The Commission believes that this ability, in particular, should alleviate the Participants' concerns regarding the potential impact of unforeseeable or reasonable delays.

Implementation of CAT NMS Plan Requirements. *See* CAT NMS Plan, *supra* note 1, at Section 1.1 for definitions of these terms. The Participants' CAT Reporting Customer and Account Technical Specifications indicates that they began implementing the customer and account information database in December 2019, *see https://www.catnmsplan.com/specifications/im,* so the Commission believes that the Participants should have ample time to achieve the required error rates for these aspects of CAT implementation.

[159] *See* note 97 *supra.*

[160] *See, e.g.,* Participant Letter, at 8–11. Although FINRA is the only Participant that may determine whether to retire OATS, the Commission continues to believe that it is appropriate to apply this condition to all Participants. All of the Participants are jointly responsible for creating a CAT that is capable of replacing OATS, and all of the Participants are regulators that will benefit from the full implementation of the CAT. *See* Proposing Release, *supra* note 2, at 48469 n.106. Moreover, FINRA has developed, and communicated to the Participants, a plan governing the retirement of OATS—*see, e.g.,* Participant Letter, at 10–11—and the Commission expects that such advance planning could make it more likely that OATS will be retired by the target deadline of December 31, 2021. Nevertheless, the Commission will continue to monitor the progress of CAT implementation closely and could consider exempting the Participants from compliance with this condition at a later date, if appropriate. *See* note 147 and associated text *infra,* noting the Commission's ability to grant exemptive relief from any requirement associated with a Financial Accountability Milestone.

[161] *See* proposed Section 1.1, ''Full Availability and Regulatory Utilization of Transactional Database Functionality.''

[162] *See* Participant Letter, at 10–11. The Commission does not believe that its involvement in approving the retirement of OATS and OATS-related rules should unduly delay the achievement of Full Availability and Regulatory Utilization of Transactional Database Functionality. FINRA and the Participants with rules relating to OATS may submit filings to the Commission at any point to identify the conditions under which OATS would be retired and OATS-related provisions removed from the Participants' rulebooks. The Commission could consider and act on these retirement filings well before the December 31, 2021 deadline and, if approved, would permit FINRA and the Participants to subsequently issue a notice indicating when the conditions identified in the filings are met, thus ensuring that this condition is fulfilled in a timely manner.

[163] *See* FIF Letter, at 4.

[164] *See id.*

[165] *See id.; see also* Fidelity Letter, at 5 (''We recommend that the SEC allow for some flexibility or reasonable delays in target deadlines, particularly in matters that may impact data quality.'').

[166] *See* SIFMA Letter, at 2. *See also* Participant Letter, at 9 (''[U]nanticipated issues invariably arise on large technology projects and CAT is no exception.'').

[167] *See* SIFMA Letter, at 2.

[168] *See id.* Similarly, the Participants stated that ''the Commission and all market participants would benefit from a more flexible approach in which the Commission would assess the appropriateness of the recovery of Post-Amendment Industry Member Fees in the context of particular facts and circumstances in the event of a delay in meeting such a Milestone.'' *See* Participant Letter, at 10.

[169] *See, e.g.,* note 6 *supra; see also* Proposing Release, *supra* note 7, at 48458–461.

[170] *See* Part II.B.2.c. *supra,* for further discussion of these arguments. *See also, e.g.,* Proposing Release, *supra* note 2, at 48460.

[171] *See, e.g.,* Fidelity Letter, at 2 (explaining how further delays by the Participants may impose additional costs on Industry Members); *see also infra* Part IV.B.

[172] *See* 15 U.S.C. 78mm; 17 CFR 242.608(e).

III. Paperwork Reduction Act

Certain provisions of the amendments adopted by the Commission contain ''collection of information requirements'' within the meaning of the Paperwork Reduction Act of 1995 (''PRA'').[173] The Commission published a notice requesting comment on the collection of information requirements in the Proposing Release[174] and submitted relevant information to the Office of Management and Budget (''OMB'') for review in accordance with 44 U.S.C. 3507(d) and 5 CFR 1320.11.[175] An agency may not conduct or sponsor, and a person is not required to respond to, a collection of information unless the agency displays a currently valid control number,[176] and the Commission has applied for an OMB control number for this collection of information. The title of the new collection of information is ''CAT NMS Plan Reports.''

The Commission requested comment on the proposed collection of information requirements, but no commenters addressed these issues. The Commission continues to believe its estimates of the burdens involved with this collection of information are reasonable, but it has adjusted some of its estimates to account for the fact that Long Term Stock Exchange, LLC has been added as a Participant.[177] Accordingly, there are now 24 Participants instead of the 23 Participants accounted for in the Proposing Release.[178]

A. Summary of Collection of Information

The modified amendments require two new categories of information collection: (1) The Implementation Plan and (2) the Quarterly Progress Reports.

1. Implementation Plan

Section 6.6(c)(i) requires the Participants, within 30 calendar days following the effective date of this amendment, to file with the Commission and make publicly available on a website a complete Implementation Plan that includes the Participants' timeline for achieving Implementation Milestones setting forth how and when the Participants will facilitate the achievement of Full Implementation of CAT NMS Plan Requirements. The Operating Committee must submit the Implementation Plan to the CEO, President, or an equivalently situated senior officer of each Participant. A Supermajority Vote of the Operating Committee will then be required to approve the Implementation Report. However, if the Implementation Plan is approved only by a Supermajority Vote of the Operating Committee, and not by a unanimous vote of the Operating Committee, each Participant whose Operating Committee member did not vote to approve the Implementation Plan shall separately file with the Commission a statement identifying itself and explaining why the member did not vote to approve the Implementation Plan. These statements shall be made publicly available by each dissenting Participant on its website or collectively by all Participants on the CAT NMS Plan website.

2. Quarterly Progress Reports

Section 6.6(c)(ii) requires the Participants, within 30 calendar days after the end of each calendar quarter, to file with the Commission and make publicly available on a website a complete Report that provides a detailed description of the progress made by the Participants towards each of the Implementation Milestones. The Participants must provide specified information regarding Implementation Milestones that have been completed, Implementation Milestones that are in progress, and Implementation Milestones that have not yet been initiated, such as updated information on currently targeted completion dates and descriptions of the current status of the Implementation Milestone, any adjustments to the targeted completion date, and supporting information demonstrating the current level of completion. The Operating Committee must submit each Quarterly Progress Report to the CEO, President, or an equivalently situated senior officer of each Participant. A Supermajority Vote of the Operating Committee shall be required to approve each Quarterly Progress Report. However, if a Quarterly Progress Report is approved only by a Supermajority Vote of the Operating Committee, and not by a unanimous vote of the Operating Committee, each Participant whose Operating Committee member did not vote to approve that Quarterly Progress Report shall separately file with the Commission a statement identifying itself and explaining why the member did not vote to approve the Report. These statements shall be made publicly available by each dissenting Participant on its website or collectively by all Participants on the CAT NMS Plan website.

B. Proposed Use of Information

1. Implementation Plan

The Commission believes that the publication of the Implementation Plan will make available critical information to the Commission, other regulators, and market participants regarding the intended goals and deadlines of the Participants. Access to this information will help the Commission and market participants to monitor the progress of CAT implementation, thereby reducing uncertainty surrounding this process. The Commission also anticipates that requiring the Participants to make public target dates submitted to senior management of each Participant and approved by a Supermajority Vote of the Operating Committee in the Implementation Plan will increase the Participants' accountability to their intended timeline. In addition, the Commission believes that requiring any Participants whose Operating Committee members do not vote to approve the Implementation Plan to disclose the basis for that decision may aid the Commission and the public to better monitor the progress of CAT implementation, because such an explanation may reveal critical information regarding whether currently targeted completion dates are realistic, whether milestones are being or have been completed in accordance with the requirements of the CAT NMS Plan, and/or whether potential risks or delays may impede the progress of CAT implementation.

2. Quarterly Progress Reports

The Commission believes that the publication of the Quarterly Progress Reports will make available critical information to the Commission, other regulators, and market participants regarding the intended goals and deadlines of the Participants. Access to this information will help the Commission and market participants to monitor the progress of CAT implementation. The Commission also anticipates that requiring the Participants to make public their accomplishments in the Quarterly Progress Reports will keep the Participants accountable to their intended timeline. Finally, the Commission expects that the provision of updated quarterly information in a Report, submitted to senior management of each Participant and approved by a Supermajority Vote of the Operating Committee, regarding the Participants' progress towards CAT implementation,

[173] 44 U.S.C. 3501 *et seq.*

[174] *See* Proposing Release, *supra* note 2, at 48474–78.

[175] 44 U.S.C. 3507; 5 CFR 1320.11.

[176] 5 CFR 1320.11(l).

[177] *See* note 1 *supra.*

[178] *See* Proposing Release, *supra* note 2, at 48474–78.

as well as any explanatory statements by Participants whose Operating Committee members do not vote to approve the Report, may reduce uncertainty regarding CAT's implementation deadlines and flag any concerns regarding the implementation process for the Commission and market participants.

C. Respondents

The respondents to all collections of information are the Participants.

D. Total Initial and Annual Reporting and Recordkeeping Burdens

The estimated burdens associated with the modified amendments are described fully below, but this table briefly summarizes the relevant burdens.

Category	Annual ongoing burden per participant (burden hours/external costs)	One-time burden per participant (burden hours/external costs)
Implementation Plan	N/A	75/$8,333.33
Quarterly Progress Reports	300/$33,333.33	N/A

1. Implementation Plan

The Commission believes that each Participant will incur, on average, a one-time burden of approximately 50 hours [179] to confer with other Participants, to draft an Implementation Plan, and to vote as to whether to approve the Implementation Plan, as required by Section 6.6(c)(iii). In the CAT NMS Plan Approval Order, the Commission stated that the Participants had estimated that approximately 20 full-time employees took approximately 30 months to develop the CAT NMS Plan, including ''staff time contributed by each Participant to, among other things, determine the technological requirements for the Central Repository, develop the RFP, evaluate Bids received, design and collect the data necessary to evaluate costs and other economic impacts, meet with Industry Members to solicit feedback, and complete the CAT NMS Plan submitted to the Commission for consideration.'' [180] The Commission then used this information to estimate that the development of the CAT NMS Plan would require, in aggregate, 14,407 burden hours for 12 months.[181]

This estimate, based on information provided by the Participants about the burdens they actually incurred in developing a related project, reflects the best data available to the Commission in estimating the number of initial burden hours required to develop the Implementation Plan. Developing the CAT NMS Plan was a far more complex project than the development of the Implementation Plan and that the burdens incurred in developing the CAT NMS Plan may be different in nature than the costs that the Participants would incur in developing the Implementation Plan. In this instance, for example, the Participants will only have 30 calendar days from the effective date of this amendment to prepare the Implementation Plan, and the Participants have already created an Updated Master Plan that contains much of the information required by Section 6.6(c)(i). In addition, the Commission believes that the Participants should already have gathered much of the information needed to create the Implementation Plan.[182] For these reasons, the Commission believes that the estimated burden for preparing the Implementation Plan should be one-twelfth the amount of the burden estimated for the development of the CAT NMS Plan,[183] or, on average, 50 initial, one-time burden hours for each Participant.[184]

In addition, the Commission estimates that it will take each Participant approximately 10 hours, on average, for its member of the Operating Committee to ensure that the Operating Committee submits the Implementation Plan to the CEO, President, or equivalently situated senior officer of each Participant, for each Participant to review the information contained in the Implementation Plan and for senior management consultations as needed, and to vote on approving the Implementation Plan.[185] The Commission expects each member of the Operating Committee to be familiar with the process of CAT implementation, which should ease the task of determining whether to vote in favor of the Implementation Plan. Accordingly, the Commission estimates that each Participant will incur, on average, a one-time burden of 60 hours to prepare the Implementation Plan and to vote as to whether to approve it,[186] for a one-time aggregate burden of approximately 1,440 hours.[187]

If the Implementation Plan is approved only by a Supermajority Vote, and not by a unanimous vote, the modified amendments require each Participant whose Operating Committee member did not vote to approve the Implementation Plan to separately file with the Commission an explanatory statement identifying itself and

[179] *See* note 184 *infra,* for an explanation of the difference in the estimated burden from the Proposing Release to this release.

[180] *See* CAT NMS Plan Approval Order, *supra* note 1, at n.3285.

[181] *See id.*

[182] *See, e.g.,* Participant Letter, at 6.

[183] Because the proposed amendment gives the Participants approximately one month to prepare and publish the Implementation Plan, the Commission has used an estimate that mirrors the one-month burden that was incurred by the Participants in developing the CAT NMS Plan.

[184] 14,407 CAT NMS Plan burden hours/12 months = 1,200.6 burden hours for all Participants. 1,200.6 aggregate burden hours/24 Participants = 50 burden hours per Participant for the Implementation Plan. Although the Commission estimated this burden as 52.2 hours per Participant in the Proposing Release, *see* note 2 *supra,* at 48475, this number was reached by dividing the aggregate burden of 1,200.6 hours by only 23 Participants; now that there are 24 Participants, the burden per Participant has been slightly reduced. For the same reason, the Commission's estimated breakdown of this burden has also been revised. The Commission now estimates that each Participant will spend, on average, 50 internal burden hours = (Attorney at 7 hours) + (Systems Analyst at 21.5 hours) + (Compliance Manager at 21.5 hours). All estimates in this section represent an average; the Commission expects that some Participants may incur greater costs and some lesser costs due to variances in economies of scale for Participants who share a common corporate parent. *See, e.g., infra* note 257.

[185] For the purposes of the Paperwork Reduction Act, the Commission is assuming that the member of the Operating Committee is a Chief Regulatory Officer or a Chief Compliance Officer and will spend 5 hours on these tasks. However, this task could be performed by any person designated by the Participant to serve as its representative on the Operating Committee. *See* Section 4.2(a) of the CAT NMS Plan. In addition, the Commission estimates that senior management who receive the Implementation Plan from the Operating Committee will spend 5 hours in consultations, including with their member of the Operating Committee regarding the Implementation Plan. Because one individual may serve as the representative for multiple affiliated Participants, the Commission expects that some Participants may incur greater costs and some lesser costs due to variances in economies of scale for Participants who share a common corporate parent.

[186] 50 burden hours + 10 burden hours = 60 burden hours.

[187] 60 burden hours × 24 Participants = 1,440 burden hours. This estimate has increased because there are now 24 Participants.

explaining why it did not vote to approve the Implementation Plan.[188] These statements shall be made publicly available by each dissenting Participant on its website or collectively by all Participants on the CAT NMS Plan website. Because there are currently 24 Participants, an Implementation Plan would need to be approved by at least 16 members of the Operating Committee to satisfy the Supermajority Vote provisions of the CAT NMS Plan.[189] At maximum, then, only eight Participants would file an explanatory statement in connection with an Implementation Plan approved only by Supermajority Vote.[190] The Commission estimates that each of the eight Participants submitting an explanatory statement will incur, on average, an initial, one-time burden of 15 hours to draft such statement.[191] When this aggregate burden is averaged across all Participants, it amounts to approximately 5 hours per Participant or 120 hours in aggregate.[192]

Finally, the Commission estimates that each Participant will incur, on average, a one-time burden of approximately 10 hours to ensure that the Implementation Plan, and any explanatory statement (if applicable), is filed with the Commission and made publicly available on a website.[193] The Commission therefore estimates an aggregate burden of approximately 240 hours for the Participants to publicly post and submit to the Commission the Implementation Plan.[194]

In total, therefore, the Commission estimates that each Participant will incur, on average, a one-time burden of approximately 75 hours [195] and approximately 1,800 hours in aggregate to comply with the provisions of the proposed amendments that relate to the Implementation Plan.[196]

The Commission further estimates that each Participant will expend approximately $8,333.33, on average, in external public relations, legal, and consulting costs related to the development of the Implementation Plan. In the CAT NMS Plan Approval Order, the Commission estimated, based on information provided by the Participants, that the Participants had collectively spent approximately $2,400,000 in preparation of the CAT NMS Plan on external public relations, legal, and consulting costs.[197] The Commission believes that the estimated burden for the Implementation Plan should be one-twelfth the amount estimated for the development of the CAT NMS Plan, because the Participants will only have 30 calendar days from the effective date of this amendment to prepare the Implementation Plan and because preparation of the Implementation Plan is a much less complex project. Accordingly, the Commission estimates that the Participants will expend approximately $200,000 in aggregate, and $8,333.33 per Participant, in external public relations, legal, and consulting costs related to the preparation of the Implementation Plan.[198]

2. Quarterly Progress Reports

The Commission believes that each Participant will incur, on average, an ongoing quarterly burden of approximately 60 hours to confer with other Participants, to draft a Quarterly Progress Report, to ensure that the Operating Committee submits each Quarterly Progress Report to the CEO, President, or equivalently situated senior officer of each Participant, and to vote as to whether to approve each Quarterly Progress Report, as required by proposed Section 6.6(c)(iii).[199] This estimate is approximately the same as the burden related to the development and approval of the Implementation Plan, because the Quarterly Progress Reports require the Participants to prepare a detailed description explaining, quantifying, and voting to approve the description of their progress towards the Implementation Milestones laid out in the Implementation Plan, including the impact that any such progress might have on the target completion dates for Implementation Milestones that have not yet been achieved. The Commission believes this estimate is appropriate because the Participants are likely already tracking some of the information required to be included in the Quarterly Progress Reports.[200] Accordingly, the Commission estimates, on average, an ongoing quarterly burden of approximately 60 hours for each Participant,[201] an ongoing annual burden of approximately 240 hours for each Participant,[202] and an aggregate annual burden of approximately 5,760 hours.[203]

If any Quarterly Progress Report is approved only by a Supermajority Vote, and not by a unanimous vote, the proposed amendments require each

[188] For the purposes of the Paperwork Reduction Act, the Commission is assuming that this task will be performed by a Chief Regulatory Officer or a Chief Compliance Officer. *See* note 185 *supra.*

[189] 24 Participants × ⅔ Participants = 16 Participants.

[190] 24 Participants − 16 Participants = 8 Participants.

[191] The Commission bases this estimate on a full-time Compliance Manager and the Chief Regulatory Officer or Chief Compliance Officer each spending 7.5 hours to prepare the explanatory statement.

[192] 8 Participants * 15 burden hours = 120 burden hours in aggregate. 120 burden hours/24 Participants = 5 burden hours. This estimate has increased because there are now 24 Participants.

[193] The Commission bases this estimate on a full-time Compliance Manager and Programmer Analyst each spending approximately 5 hours, for a combined total of approximately 10 hours, to prepare and publicly post the relevant documents.

[194] 10 burden hours per Participant × 24 Participants = 240 burden hours.

[195] 50 hours + 10 hours + 5 hours + 10 hours = 75 burden hours.

[196] 75 hours × 24 Participants = 1,800 burden hours. This estimate has increased because there are now 24 Participants. *See* Part IV.C. *infra* for a dollar cost estimate of this burden.

[197] *See* CAT NMS Plan Approval Order, *supra* note 1, at n.3287.

[198] $2,400,000 CAT NMS Plan costs/12 months = $200,000 for all Participants. $200,000/24 Participants = $8,333.33 per Participant for the Implementation Plan. Although the Commission estimated this burden as $8,695.65 per Participant in the Proposing Release, *see* note 2 *supra,* at 48476, this number was reached by dividing the aggregate burden of $200,000 by only 23 Participants; now that there are 24 Participants, the burden per Participant has been slightly reduced.

[199] All estimates in this section represent an average; the Commission expects that some exchanges may incur greater costs and some lesser costs due to variances in economies of scale for Participants who share a common corporate parent. *See infra* note 257.

[200] *See, e.g.,* Proposing Release, *supra* note 2, at 48462 n.53 and associated text.

[201] The Commission estimates that each Participant will spend, on average, 50 internal burden hours to confer with other Participants and to compile the Quarterly Progress Report = (Attorney at 7 hours) + (Systems Analyst at 21.5 hours) + (Compliance Manager at 21.5 hours). In addition the Commission estimates, for the purposes of the Paperwork Reduction Act, that the chief Compliance Officer or Chief Regulatory Officer of each Participant will spend 5 hours, on average, to submit the Quarterly Progress Report to the CEO, President, or equivalently situated senior officer of each Participant, to review the information contained in each Quarterly Progress Report and for senior management consultations as needed, and to vote on approving the Quarterly Progress Report. In addition, the Commission estimates that the CEO, President, or equivalently situated senior officer of each Participant will spend 5 hours in consultations, including with their member of the Operating Committee regarding each Quarterly Progress Report. 50 hours + 5 hours + 5 hours = 60 hours. Because one individual may serve as the representative for multiple affiliated Participants, the Commission expects that some Participants may incur greater costs and some lesser costs due to variances in economies of scale for Participants who share a common corporate parent. Although the Commission estimated this burden as 62.2 hours per Participant in the Proposing Release, *see* note 2 *supra,* at 48476–77, this estimate was partially based on the fact that there were only 23 Participants; now that there are 24 Participants, the burden per Participant has been slightly reduced.

[202] 60 burden hours per Participant per Quarterly Progress Report * 4 Quarterly Progress Reports = 240 annual burden hours per Participant for the Quarterly Progress Reports.

[203] 240 annual burden hours per Participant * 24 Participants = 5,760 aggregate annual burden hours. This estimate has increased because there are now 24 Participants.

Participant whose Operating Committee member did not vote to approve that Quarterly Progress Report to separately file with the Commission an explanatory statement identifying itself and explaining why it did not vote to approve the Report.[204] These statements shall be made publicly available by each dissenting Participant on its website or collectively by all Participants on the CAT NMS Plan website. Because there are currently 24 Participants, each Quarterly Progress Report would need to be approved by at least 16 members of the Operating Committee to satisfy the Supermajority Vote provisions of the CAT NMS Plan.[205] At maximum, then, only eight Participants would file an explanatory statement in connection with a Quarterly Progress Report approved only by Supermajority Vote.[206] The Commission estimates that each of the eight Participants submitting an explanatory statement will incur, on average, an ongoing burden of 15 hours to draft such statement.[207] When this aggregate burden is averaged across all Participants, it amounts to an ongoing quarterly burden of approximately 5 hours per Participant,[208] an ongoing annual burden of approximately 20 hours per Participant,[209] and an aggregate annual burden of approximately 420 hours.[210]

Additionally, the Commission estimates that each Participant will incur an ongoing quarterly burden, on average, of approximately 10 hours to ensure that each Quarterly Progress Report, and any explanatory statement (if applicable), is filed with the Commission and made publicly available on a website.[211] The Commission therefore estimates an annual burden, on average, of approximately 40 hours for each Participant,[212] and an aggregate annual burden of 960 hours for all Participants,[213] to publicly post and submit to the Commission the Reports.

In total, therefore, the Commission estimates that each Participant will incur, on average, an ongoing burden of approximately 75 hours per Quarterly Progress Report,[214] for an annual average estimated burden of 300 hours[215] and approximately 7,200 hours in aggregate.[216]

Similarly, the Commission estimates that each Participant will expend, on an ongoing basis, approximately the same amount of external public relations, legal, and consulting costs associated with the Implementation Plan on each Quarterly Progress Report. Accordingly, the Commission estimates, on average, an ongoing quarterly cost of approximately $8,333.33 for each Participant, an ongoing annual cost of $33,333.33 for each Participant,[217] and an aggregate annual cost of approximately $800,000.[218] A portion of these costs may be recoverable from Industry Members, if consistent with the Exchange Act and the CAT NMS Plan.[219]

E. Collection of Information Is Mandatory

Each collection of information discussed above is mandatory.

F. Confidentiality of Responses to Collection of Information

Neither the Implementation Plan nor the Quarterly Progress Reports will be confidential. Rather, each will be publicly posted by the Participants on a website.

G. Retention Period for Recordkeeping Requirements

National securities exchanges and national securities associations are required to retain records and information pursuant to Rule 17a–1 under the Exchange Act.[220]

IV. Economic Analysis

Section 3(f) of the Exchange Act requires the Commission, whenever it engages in rulemaking and is required to consider or determine whether an action is necessary or appropriate in the public interest, to consider, in addition to the protection of investors, whether the action would promote efficiency, competition, and capital formation.[221] In addition, Section 23(a)(2) of the Exchange Act requires the Commission, when making rules under the Exchange Act, to consider the impact such rules would have on competition.[222] Exchange Act Section 23(a)(2) prohibits the Commission from adopting any rule that would impose a burden on competition not necessary or appropriate in furtherance of the purposes of the Exchange Act. The discussion below addresses the likely economic effects of the rule, including the likely effect of the rule on efficiency, competition, and capital formation.

As discussed above and in the Proposing Release, since the adoption of Rule 613 in 2012, CAT implementation has experienced recurrent delays.[223] These implementation delays have postponed the benefits of the CAT NMS Plan to investors[224] and may have resulted in additional costs to Industry Members.[225] The Commission believes that modifying the CAT NMS Plan to require operational transparency and provide financial accountability for meeting implementation milestones will impose more structure on the process and is appropriate to prevent any further delays to CAT implementation.

The amendments increase operational transparency by requiring Participants to publish a complete CAT implementation plan, and to publish a progress report quarterly, both of which require approval by a Supermajority Vote of the Operating Committee.[226] The amendments also establish Financial Accountability Milestones and Reduced Fee Recovery Rates (''RFRRs'') that take effect and increase in magnitude in response to delays in meeting certain Financial

[204] For the purposes of the Paperwork Reduction Act, the Commission is assuming that this task will be performed by a Chief Regulatory Officer or a Chief Compliance Officer. *See* note 185 *supra.*

[205] *See* note 189 *supra.*

[206] *See* note 190 *supra.*

[207] *See* note 191 *supra.*

[208] 8 Participants * 15 burden hours = 120 burden hours in aggregate. 120 burden hours/24 Participants = 5 burden hours. This estimate has increased because there are now 24 Participants.

[209] 5 burden hours × 4 Quarterly Progress Reports = 20 burden hours. This estimate has increased because there are now 24 Participants.

[210] 20 annual burden hours × 24 Participants = 480 burden hours. This estimate has increased because there are now 24 Participants.

[211] The Commission bases this estimate on a full-time Compliance Manager and Programmer Analyst each spending approximately 5 hours, for a combined total of approximately 10 hours, to prepare and publicly post the relevant documents.

[212] 10 burden hours per Quarterly Progress Report × 4 quarters = 40 annual burden hours per Participant.

[213] 40 annual burden hours per Participant × 24 Participants = 960 aggregate annual burden. This estimate has increased because there are now 24 Participants.

[214] 60 hours + 5 hours + 10 hours = 75 burden hours.

[215] 75 hours × 4 Quarterly Progress Report = 300 hours.

[216] 300 hours × 24 Participants = 7,200 burden hours. *See* Part IV.C. *infra* for a dollar cost estimate of this burden. This estimate has increased because there are now 24 Participants.

[217] $8,333.33 per Participant per Quarterly Progress Report * 4 Quarterly Progress Reports = $33,333.33 per Participant per year for the Quarterly Progress Reports. Although the Commission estimated this burden as $34,782.60 per Participant in the Proposing Release, *see supra* note 2, at 48477, this estimate was partially based on the fact that there were only 23 Participants; now that there are 24 Participants, the burden per Participant has been slightly reduced.

[218] $33,333.33 per Participant * 24 Participants = $800,000 aggregate annual cost.

[219] *See, e.g.,* Article XI of the CAT NMS Plan.

[220] 17 CFR 240.17a–1.

[221] 15 U.S.C. 78c(f).

[222] 15 U.S.C. 78w(a)(2).

[223] *See supra* Part I; Proposing Release, *supra* note 2 at Part IV.A.2.

[224] *See* CAT NMS Plan Approval Order, *supra* note 1, at Section V.E.

[225] *See infra* Part IV.B.

[226] *See supra* Part II.A. and *infra* Part IV.B.

Accountability Milestones.[227] Thus, the amendments would shift some costs from Industry Members to Participants if the Participants fail to meet certain Financial Accountability Milestones.

The Commission is making minor changes to the economic analysis it made in the Proposing Release.[228] These changes address the modifications the Commission is making to the amendments, which include: providing the Participants with additional time to prepare, file, and publish the Quarterly Progress Reports; eliminating the requirement that manual and complex options transactions, as well as allocation information for options transactions reported by Industry Members, satisfy the initial error rates specified by Section 6.5(d)(i) of the CAT NMS Plan by December 31, 2021; and modifying the first Financial Accountability Milestone, Initial Industry Member Core Equity Reporting, and the fee recovery schedule associated with that Financial Accountability Milestone. These changes to the Commission's analysis also address comments related to its economic analysis in the Proposing Release.

A. Baseline

Based on comments received, the Commission is updating its Baseline analysis. The Commission's analysis of the Baseline from the Proposing Release and changes to this analysis are discussed below.

1. Transparency of CAT Implementation Status

In the Proposing Release, the Commission discussed how Industry Members obtain information about the implementation status of the CAT NMS Plan through several mechanisms.[229] A few representatives of Industry Members are privy to information through their participation on the CAT Advisory Committee, but this information is not widely available. In addition, the Commission discussed that the Operating Committee provides a website with information on the CAT NMS Plan, but that there is no requirement in the CAT NMS Plan to keep it current. Furthermore, the Operating Committee provides occasional updates to Industry Members on the state of implementation. Finally, the Commission stated that Industry Members gain information about CAT implementation through the Industry Technical Specifications Working Group.

In their letter, the Participants detailed additional sources of public information about CAT implementation. They noted that ''FINRA CAT and the Participants also hold bi-weekly Industry meetings to communicate schedule and implementation updates and answer questions. Industry Member framing calls and deep dive sessions are regularly held so that Industry Members have input into technical specifications related to the CAT. As noted above, CAT LLC also conducts regular webinars and publishes CAT alerts on issues material to the industry such as connectivity methods, onboarding, and FDID reporting among others.'' [230] The Commission is updating its analysis to acknowledge these additional sources of public information. However, as discussed above, the Commission continues to believe that additional disclosures required by the amendments will improve transparency around CAT implementation.[231]

2. Status of Implementation

As discussed above and in the Proposing Release, there have been repeated delays to implementation and it remains uncertain when CAT will be fully implemented.[232] The Commission stated in the Proposing Release and continues to believe that the multiple missed deadlines in the CAT NMS Plan have led to uncertainty for Industry Members surrounding the timeline for CAT implementation.

Although the Participants ''acknowledge[d] the concerns underlying the Proposed Amendments to the CAT NMS Plan,'' they noted recent progress with respect to the CAT and stated that ''[t]hese and other factors suggest that there will be continued progress toward the expeditious development and implementation of the CAT.'' [233] The Participants further stated that the successor Plan Processor ''has made substantial and rapid progress in building the CAT,'' and detailed this progress in their letter. The Commission acknowledges this progress,[234] but remains concerned about the possibility for additional delays to CAT implementation. The recent steps toward implementation have likely decreased industry uncertainty [235] about the timeline of CAT implementation, but the Commission believes that remaining uncertainty about the implementation timeline is likely to be reduced by adoption of the amendments.

Recently, the Commission granted the Participants exemptive relief to allow for the implementation of phased reporting to the CAT for Industry Members, in place of the reporting schedule set forth for Industry Members in the CAT NMS Plan.[236] Further, in light of COVID–19 and a subsequent no-action request submitted by the Participants, the Commission recently granted exemptive relief such that the Compliance Rules formulated by Participants may require core equity reporting for Industry Members to begin on June 22, 2020 and core options reporting for Industry Members to begin on July 20, 2020.[237]

B. Benefits

In the Proposing Release, the Commission stated its preliminarily belief that the proposed amendments offer two primary benefits.[238] First, because the amendments include financial accountability provisions that may cause the CAT to be implemented more expeditiously and efficiently,[239] investors could realize the benefits of the CAT sooner than they would otherwise be realized without the proposed amendments. Second, the Commission preliminarily believed that Industry Members would have more certainty surrounding the implementation timeline for CAT, and the timeline for retirement of OATS, reducing possible associated and unnecessary implementation and maintenance costs.[240] However, the Commission recognized that if the Participants continue to miss deadlines under the amendments, it would result in more uncertainty for Industry Members about whether and when the Participants are capable of achieving CAT implementation, particularly if the Participants are unable to make progress

[227] The Plan allows Participants to recover a percentage of certain CAT costs from Industry Members. In the event that RFRRs are triggered, the amendments would reduce the amount of fees that the Participants are allowed to recover from Industry Members according to the fee schedule described in Part II.B below.

[228] *See* Proposing Release, *supra* note 2, at Part IV.

[229] *See* Proposing Release, *supra* note 2, at Part IV.A.

[230] *See* Participant Letter, at 6.

[231] *See supra* Part II.A.

[232] *See supra* Part I.; Proposing Release, note 2 *supra,* at Part IV.A.2., for a detailed discussion of Plan implementation status.

[233] *See* Participant Letter, at 2.

[234] Another commenter acknowledged the improvement to the pace of CAT implementation. *See* Fidelity Letter, at 5.

[235] *See infra* Part IV.B., for further discussion of industry uncertainty.

[236] *See supra* Part I.

[237] *See supra* Part I.

[238] *See* Proposing Release, *supra* note 2, at Part IV.B.

[239] *See infra* Part IV.D.1., for comments on the Commission's analysis of efficiency.

[240] *See infra* Part IV.D.1., for discussion of impacts on efficiency of Industry Member CAT implementation.

notwithstanding the amendment's financial accountability measures.[241]

Finally, the Commission stated that the requirement that the Implementation Plan and Quarterly Progress Reports be submitted to the CEO, President, or an equivalently situated senior officer of each Participant prior to the Operating Committee approval vote, is intended to promote senior management attention and promote accountability with respect to CAT implementation.[242]

One comment from an Industry Member expressed support for the Commission's belief that uncertainty about the CAT implementation timeline and implementation delays are potentially costly to Industry Members.[243]

Commenters discussed the potential benefits of increased operational transparency. One commenter stated that information sharing and good communication are key to the success of CAT.[244] Another commenter stated that ''quarterly detailed reporting is appropriate and would provide useful information to all interested parties.'' [245] However, the Participants stated that ''the proposed Quarterly Progress Reports would impose requirements that are both unnecessary and, in many instances, at odds with maintaining the security of the CAT.'' [246] However, as discussed above, while the Participants have provided information regarding CAT implementation to the Commission, much of the information provided by the Participants to the Commission has not been shared widely with the public.[247] In addition, the Commission takes concerns regarding the security of the CAT very seriously, but for the reasons discussed above it does not believe that the proposed amendments, or the examples raised by the Participants in their comment letter, implicate any such concerns.[248] The Commission continues to believe that the amendments will provide the benefits identified in the Proposing Release.[249] As discussed above, the Commission is making three limited modifications to the amendments, but believes these modifications are unlikely to significantly change the benefits of the amendments.

The first modification provides the Participants with additional time to prepare, file, and publish the Quarterly Progress Reports. The Commission does not believe this additional time in releasing those reports will significantly reduce the value of the information in the reports to Industry Members, the public, or the Commission. The Commission also recognizes that providing the Participants with adequate time to prepare the Reports may allow modest improvements to the quality of information contained in the Reports; this could benefit users of the information contained in the Reports.

The second modification eliminates the proposed requirements that manual and complex options transactions, as well as allocation information for options transactions reported by Industry Members, (the ''Specified Data''), satisfy the initial error rates specified by Section 6.5(d)(i) of the CAT NMS Plan by December 31, 2021. As discussed below, the Commission believes that while this modification may diminish the benefits of the amendments to the extent that manual and complex options transaction data is not as accurate as it would have otherwise been, any diminishment will be limited to a subset of CAT transaction data and will be temporary.[250] The Commission does not expect this modification will delay the retirement of OATS because the Specified Data is not included in OATS currently. As a result, this modification is unlikely to significantly reduce the benefits of the amendments.[251]

Finally, the Commission is modifying the first Financial Accountability Milestone, Initial Industry Member Core Equity Reporting, and the fee recovery schedule associated with that Financial Accountability Milestone.[252] The amendments will now define ''Initial Industry Member Core Equity and Option Reporting'' as the point at which Industry Members (excluding Small Industry Members that do not report to the OATS) have begun to report: (a) Equities transaction data, excluding Customer Account Information, Customer-ID, and Customer Identifying Information, to the CAT; and (b) options transaction data, excluding Customer Account Information, Customer-ID, and Customer Identifying Information, to the CAT. The Commission is also modifying the amendments to provide that the target deadline for the Initial Industry Member Core Equity and Option Reporting milestone is July 31, 2020.[253] The Commission believes that this change will not significantly reduce the benefits of the amendments because, in light of the exemptive relief that the Commission has recently granted, the Commission believes these modifications to the first Financial Accountability Milestone will appropriately incentivize the Participants to meet the updated CAT implementation schedule because failing to meet those milestones will cause the Participants to incur RFRRs. The Commission recognizes that the financial incentives to meet the modified first Financial Accountability Milestone are somewhat reduced, because only expenses incurred after the Effective Date of the amendments would be subject to RFRRs and the Participants have presumably incurred most of the implementation expenses associated with this milestone already. However, the Commission is also modifying the fee recovery schedule for the first Financial Accountability Milestone such that RFRRs increase more quickly as delays to achieving the milestone extend. The Commission believes these adjustments increase the Participants' financial incentives to meet the first milestone such that it remains an effective measure to incentivize the Participants to implement CAT according to the current implementation schedule.

C. Costs

The Commission continues to believe that the proposed amendments are likely to have both direct and indirect costs that are likely to be passed on to investors, as discussed in the Proposing Release.[254] The Commission estimated that the direct costs to the Participants from the proposed amendments would include up to approximately $3.7MM in ongoing annual costs and total one-time costs of up to approximately $932,000.[255] The Commission is updating its analysis of costs in response to public comments, certain changes to the amendments, and a change in the number of Participants. The Commission now estimates that the direct costs to the Participants from the

[241] *See* Proposing Release, *supra* note 2, at Part IV.B.

[242] *Id.*

[243] Fidelity Letter, at 3. *See infra* Part IV.D.1. for further discussion.

[244] *See* Fidelity Letter, at 3.

[245] *See* Better Markets Letter, at 7.

[246] *See* Participant Letter, at 6.

[247] *See supra* Part II.A.2.

[248] *See id.*

[249] *See* Proposing Release, *supra* note 2, at Part IV.B.

[250] *See infra* Part IV.E.4., for further discussion of an alternative approach that does not provide the error rate objective exclusion for manual and complex options transactions, as well as representative order linkages and related allocation information for all equities and options transactions.

[251] *See id.*

[252] *See supra* Part II.B.2.

[253] *See supra* Part IV.A.2.

[254] *See* Proposing Release, *supra* note 2, at Part IV.C.

[255] These costs are detailed in the Proposing Release. *See id.*

proposed amendments include up to approximately $3.8MM in ongoing annual costs and total one-time costs of up to approximately $956,000.[256] The Commission continues to believe that if the RFRRs are triggered, during a one-year period during implementation, up to $120MM in costs of CAT implementation and operation could be shifted from Industry Members to Participants, but this would not change total direct costs to industry as a whole from the CAT NMS Plan.

In the next sub-section, the Commission re-estimates the direct costs of the amendments to account for a change in the number of Participants. In the sub-section following that re-estimation, the Commission summarizes its analysis of indirect costs from the Proposing Release, and updates that analysis in response to comments.

Direct Costs

The Commission estimates that the direct costs to Participants from the proposed amendments[257] include up to approximately $3.8MM[258] in annual costs and total one-time costs of up to approximately $956,000.[259] The ongoing annual costs per Participant are comprised of approximate labor costs of up to $143,000[260] and external consulting costs of $33,000[261] to prepare, approve through Supermajority Vote of the Operating Committee, publish, and when applicable, for each Participant whose Operating Committee member did not vote to approve the Implementation Plan to separately file with the Commission and make available on a public website an explanatory statement identifying itself and explaining why it did not vote to approve the Quarterly Progress Report.[262] The one-time costs per Participant include up to $36,000[263] in labor costs and $8,300[264] in external consulting costs to prepare, approve through Supermajority Vote of the Operating Committee, publish, and when applicable, for each Participant whose Operating Committee member did not vote to approve the Implementation Plan to separately file with the Commission and make available on a public website an explanatory statement identifying itself and explaining why it did not vote to approve the Implementation Plan.

[256] These maximum totals assume that upon each approval vote, eight Participants incur costs to prepare and publish statements explaining why they did not vote to approve the document in question. These revised cost estimates are discussed further below.

[257] Direct costs cited in this paragraph are quantified from estimates in the PRA. *See supra* Part III. Discussion of other direct costs follows discussion of costs from the PRA. The estimated costs represent averages; the Commission expects that some Participants will incur greater costs, some lesser. In calculating the costs to prepare, review, and vote on the Implementation Plan and Quarterly Progress Reports on a per Participant basis, the Commission recognizes that its estimates per Participant may be overstated to the extent that there are economies of scale for Participants who share a common corporate parent. Specifically, the voting representative for one Participant may serve as the voting representative on the Operating Committee for multiple affiliated Participants under Section 4.2(a) of the CAT NMS Plan. Once this representative conducts the necessary background work to vote on the Implementation Plan or a Quarterly Progress Report, and, if applicable, for the Participant to prepare an explanation of why this representative did not vote to approve the Implementation Plan or Quarterly Progress Report, the representative would not need to duplicate all of his or her efforts for another Participant. Thus, the Commission believes that its estimates may be overstated for some Participants in the sense that one representative reviewing and voting on the Implementation Plan or Quarterly Progress Reports might not require 5 hours for each exchange for which he or she is performing this task. On the other hand, the Commission believes that its estimates for Participants who are not affiliated with other Participants might be understated for some Participants because they are unable to benefit from economies of scale. Representatives for unaffiliated exchanges may require more than 5 hours to perform this same task. The Commission believes that 5 hours is a reasonable estimate of average representative time required.

[258] Assuming that each Supermajority Vote has the minimum of 16 Participants voting to approve each Quarterly Progress Report, total annual ongoing maximum cost is (24 Participants × $117,424 per Participant + 32 explanatory statements × $6,472.50 per statement = $3,025,296) in labor costs plus (24 Participants × $33,333 = $800,000) in external consulting costs = $3,825,296 in total costs. *See infra* note 265.

[259] Assuming that each Supermajority Vote has the minimum of 16 Participants voting to approve the Implementation Plan, total one-time maximum cost is (24 Participants × $31,514 per Participant = $756,324) in labor costs plus (24 Participants × $8,333 = $200,000) in external consulting costs = $956,324 in total costs. *See infra* note 263.

[260] *See supra* Part III.D. Annual labor costs per Participant assume preparation, approval through Supermajority Vote of the Operating Committee, and publication of four Quarterly Progress Reports and any accompanying statements explaining why a Participant did not vote to approve the Quarterly Progress Report. Preparation of each Quarterly Progress Report requires 7 hours of Attorney labor at $427 per hour; 21.5 hours of Systems Analyst labor at $270 per hour; 21.5 hours of Compliance Manager labor at $318 per hour. 4 × [($427 × 7) + ($270 × 21.5) + ($318 × 21.5)] = $62,524. Time for the Participant's Operating Committee Member to prepare for and vote on the Quarterly Progress Reports is assumed to be 5 hours at a rate of $545 per hour. 4 × ($545 × 5) = $10,900, using the hourly rate for a Chief Compliance Officer. Publication and filing of the Quarterly Progress Reports and any explanatory statements of the Operating Committee Member's vote is assumed to require 5 hours of Compliance Manager labor at $318 per hour and 5 hours of Programmer/Analyst labor at $247 per hour. 4 × ($318 × 5) + ($247 × 5) = $11,300. The Quarterly Progress Report shall be submitted to the President, CEO or equivalently situated senior officer of each Participant prior to the approval vote of the Operating Committee, and any subsequent consultation, including with their Operating Committee member, is assumed to require five hours of labor at $1,635 per hour. 4 × ($1,635 × 5) = $32,700. *See infra* note 265, for discussion of this hourly rate. Total annual costs for each Participant are thus $62,524 + $10,900 + $11,300 + $32,700 = $117,424. If a Participant is required to prepare a statement explaining why it did not vote to approve a Quarterly Progress Report, preparation requires 7.5 hours of Compliance Manager Labor at $318 per hour and 7.5 hours of Chief Compliance Officer labor at $545 per hour. ($318 × 7.5) + ($545 × 7.5) = $6,472.5. For each Quarterly Progress Report, 24 Participants will incur costs to prepare the report, but no more than 8 will incur costs to prepare statements explaining why they did not vote to approve the Quarterly Progress Report. *See supra* Part III.D.2. Consequently, there may be up to 32 such quarterly statements (4 × 8) required annually. Thus, Quarterly Progress Report preparation, depending on the number of explanatory statements required, would have an annual aggregate maximum labor cost of (24 × $117,424) + (32 × $6,472.5) = $3,025,296 with a per Participant average labor cost of $3,025,296 ÷ 24 = $126,054. Hourly rates are based on hourly rates for Attorneys, Systems Analysts, Compliance Managers, Chief Compliance Officers, and Programmer/Analysts from SIFMA's Management & Professional Earnings in the Securities Industry 2013, modified by Commission staff to account for an 1800-hour work-year and inflation, and multiplied by 5.35 to account for bonuses, firm size, employee benefits, and overhead. Salary information for voting representatives uses the Chief Compliance Officer rate of from SIFMA's Management & Professional Earnings in the Securities Industry 2013, modified as above to $545 per hour.

[261] *See supra* Part III.D. External consulting costs assume four Quarterly Progress Reports. 4 x $8,333 = $33,333.

[262] These annual costs would be incurred until completion of CAT implementation. *See supra* Part III.D.2.

[263] *See supra* Part III.D.2. Preparation and approval through Supermajority Vote of the Operating Committee of the Implementation Plan requires 7 hours of Attorney labor at $427 per hour; 21.5 hours of Systems Analyst labor at $270 per hour; 21.5 hours of Compliance Manager labor at $318 per hour. ($427 × 7) + ($270 × 21.5) + ($318 × 21.5) = $15,631. Time for the Participant's Operating Committee Member to prepare for and vote on the Implementation plan is assumed to be 5 hours at a rate of $545 per hour. ($545 × 5) = $2,725, using the hourly rate for a Chief Compliance Officer. Publication and filing of the Implementation Plan and any explanatory statement of the Operating Committee Member's vote is assumed to require 5 hours of Compliance Manager labor at $318 per hour and 5 hours of Programmer/Analyst labor at $247 per hour. ($318 × 5) + ($247 × 5) = $2,825. The Implementation Plan shall be submitted to the President, CEO or equivalently situated senior officer of each Participant prior to the approval vote of the Operating Committee, and any subsequent consultation, including with their Operating Committee Member, is assumed to require five hours of labor at $1,635 per hour. ($1,635 × 5) = $8,175. *See infra* note 265, for discussion of this hourly rate. Total one time labor costs are $15,631 + $2,725 + $2,825 + $8,175 = $29,356. If an explanatory statement of the Operating Committee Member's vote needs to be prepared, this would require 7.5 hours of labor by a Compliance Manager at $318 per hour and 7.5 hours of labor by the Chief Compliance Officer at $545 per hour. ($318 × 7.5) + ($545 × 7.5) = $6,472.5. Thus, Implementation Plan preparation, depending on the number of explanatory statements required, would have an annual aggregate maximum labor cost of (24 × $29,356) + (8 × $6,472.5) = $756,324 with a per Participant average labor cost of $756,324 ÷ 24 = $31,514. Aggregate totals assume 24 Participants and 8 explanatory statements.

[264] *See supra* Part III.D.2.

The amendments require that both the Implementation Plan and Quarterly Progress Reports be submitted to the President, CEO or equivalently situated senior officer of each Participant prior to the approval vote by the Operating Committee. In connection with this requirement, the Commission estimates that each Participant will incur one-time consultation costs of $8,200 for the Implementation Plan, and ongoing annual costs of $32,700 for Quarterly Progress Reports until such time as CAT is fully implemented.[265]

Indirect Costs

In the Proposing Release, the Commission stated its expectation that the proposed amendments would have additional indirect costs.[266] These indirect costs include potentially accelerated implementation costs to Participants, Industry Members, and Service Bureaus. Furthermore, there could be indirect costs related to the potential for inefficient acceleration of the implementation of the CAT. The Commission, however, continues to believe this is unlikely because the deadlines for Financial Accountability Milestones are aligned with the most recent timelines published by Participants [267] and the RFRRs increase as delays persist until the fee recovery rate would become zero. Finally, if the RFRRs are triggered, the Commission stated that it is possible there could be indirect costs related to the possible market exit of exchanges.[268]

The Commission stated that while triggering the RFRRs would cause Participants to accrue additional costs because they could not recover these costs from Industry Members, there would be a corresponding financial benefit to Industry Members because they would not have to pay those costs.[269] Consequently, the cost transfers from the RFRRs would not impose a net cost on industry as a whole.

The Commission's assessment of the likely indirect costs of the amendments as adopted is unchanged from what was discussed in the Proposing Release, except as discussed below.[270]

Commenters noted that lack of flexibility in Financial Accountability Milestones might precipitate additional indirect costs. Commenters stated that these indirect costs could include: Lower quality deliverables; an incomplete CAT Repository; reduced emphasis on the development and publication of vital industry member guidance; and the implementation of Phase 2a prior to the full development of the CAT system. In short, one commenter stated that the ''financial penalty structure outlined in the Proposed Amendments has the clear potential to limit and short circuit the required cooperative analysis, feedback, and iterative update process that would result in the reduced quality of deliverables and place at risk CAT's key regulatory goals.'' [271] The Participants further stated that some provisions of the Financial Accountability Milestones (particularly data error rates, the retirement of OATS, and sufficient inter- and intra-firm linkages within CAT data) are not entirely within their control. The Participants state, ''Faced with financial penalties for missed deadlines, the Participants may not be able to fully address legitimate industry concerns or accommodate requests for delays with respect to future deadlines.'' [272] The Commission is updating its analysis to recognize these additional potential indirect costs of the amendments. Nevertheless, as discussed above, the Commission believes that the modifications to the Financial Accountability Milestones described above should alleviate commenters' concerns regarding the potential impact of unforeseeable or reasonable delays.[273]

Two commenters stated that the proposal may create incentives for Industry Members to change their CAT reporting behavior to increase the likelihood of a delay because triggering RFRRs reduces CAT implementation costs that Participants can recover from Industry Members, reducing Industry Member costs.[274] The Commission believes this outcome is unlikely for two reasons. First, the Participants are regulators with regulatory authority over their Industry Members. Industry Members that fail to comply with CAT reporting rules would potentially face enforcement actions from any Participant with regulatory authority over them.[275] While an Industry Member's noncompliance with CAT reporting rules might contribute to triggering RFRRs which could financially benefit all Industry Members by shifting costs that may have been recoverable through CAT fees by the Participants, the costs of any enforcement action brought by Participants with regulatory authority over that Industry Member would not be shared across Industry Members and those enforcement costs could include reputational costs.[276] Second, as discussed above, the Commission believes that delays to CAT implementation are costly to Industry Members. Industry Member reporting problems could prolong the costly period of duplicative reporting that Industry Members face. Consequently, the Commission believes that Industry Members are unlikely to minimize their implementation costs by taking actions that could trigger RFRRs.

As discussed above, the Commission is making certain changes to the amendments, but believes these changes address concerns that commenters raised about the proposed amendments and are unlikely to significantly affect the costs of the amendments.[277] The

[265] The Commission estimates that the President, CEO or equivalently situated senior officer of each Participant will spend approximately five hours in consultations, including with the Participant's Operating Committee member, and estimates this will cause each Participant to incur labor costs of (5 × $1,635) = $8,175 for the Implementation Plan and (4 × $8,175) = $32,700 annually for Quarterly Progress Reports. Hourly rates are based on hourly rates for Chief Compliance Officers from SIFMA's Management & Professional Earnings in the Securities Industry 2013, modified by Commission staff to account for an 1800-hour work-year and inflation, and multiplied by 5.35 to account for bonuses, firm size, employee benefits and overhead. Salary information for CEO/presidents of exchanges are not generally publically available as they might be for CEO/presidents of exchange holding groups. The Commission estimates an hourly rate for the President, CEO or equivalently situated senior officer of an exchange by using the hourly rate for a Chief Compliance Officer of $545 and multiplying by 3 to account for the expected salary differential.

[266] *See* Proposing Release, *supra* note 2, at Part IV.C.

[267] One commenter criticized the Participants' timelines, suggesting changes to a number of interim milestones. *See supra* note 125, for a discussion of this argument.

[268] *See* Proposing Release, *supra* note 2, at Part IV.C.

[269] *Id.*

[270] *See* Proposing Release, *supra* note 2, at Part IV.C.

[271] *See* FIF Letter, at 3, 7–8. *See also supra* Part II.B.2.b.

[272] *See* Participant Letter, at 10.

[273] *See supra* Part II.B.2.

[274] *See* Better Markets Letter, at 7–8; Participant Letter, at 8–9.

[275] *See, e.g.,* NYSE Rule 6830, Consolidated Audit Trail—Industry Member Data Reporting; Nasdaq General Equities and Options Rule 7, Section 3, Consolidated Audit Trail—Industry Member Data Reporting.

[276] If Industry Members collectively believe that Participants are unlikely to take enforcement actions related to CAT reporting, then Industry Members might believe the potential benefits of triggering RFRRs outweigh the risk of potential enforcement actions related to CAT reporting. However, given that this argument hinges on Industry Members being motivated to trigger RFRRs to avoid costs, it logically follows that the Participants would also be motivated to avoid triggering RFRRs to avoid costs and would thus be likely to take those enforcement actions necessary to avoid triggering RFRRs. The Commission believes that Industry Members generally understand that the Participants will enforce their rules, because the Participants have an obligation under the Exchange Act to enforce compliance by their members with the Exchange Act, the rules and regulations thereunder, and the Participants' own rules.

[277] *See supra* Part II.B.2., for further discussion of comments on the proposed amendments and the Commission's modifications to the amendments.

first modification to the amendments provides the Participants with additional time to prepare, file, and publish the Quarterly Progress Reports. The Commission believes it is possible the additional time provided to complete and publish those Reports may provide minor reductions to the Participants' costs because the longer timeframe to prepare the Reports may allow more efficient scheduling of human resources, such as avoiding overtime.

The second modification eliminates the proposed requirement of the December 31, 2021 Financial Accountability Milestone that the Specified Data satisfy the initial error rates specified by Section 6.5(d)(i) of the CAT NMS Plan.[278] As discussed below, the Commission believes that while this modification may reduce implementation costs for both Participants and Industry Members, it does not believe any reduction will significantly impact the magnitude of implementation costs. Rather, this modification is more of an efficiency improvement than a significant cost reduction.[279]

Finally, the Commission is modifying the first Financial Accountability Milestone, Initial Industry Member Core Equity Reporting, and the fee recovery schedule associated with that milestone as discussed above.[280] The Commission believes the Participants will need to incur similar costs to achieve the objectives associated with the modified milestone in order to meet the Financial Accountability Milestone on July 31, 2020 for two reasons. First, while shifting the first milestone date from April to July 2020 may result in additional costs being potentially subjected to RFRRs from the first Financial Accountability Milestone, specifically those related to operating the Plan and the Central Repository from April 30, 2020 to July 31, 2020, these costs are no longer part of the second Financial Accountability Milestone and are no longer subject to RFRRs related to the December 31, 2020 milestone date. Second, the Commission believes that it is unlikely that the Participants will fail to meet the July 31, 2020 milestone objectives because it believes the milestone dates are reasonable and feasible deadlines.[281]

D. Impact on Efficiency, Competition, and Capital Formation

The Commission's analysis of impacts on efficiency, competition and capital formation presented in the Proposing Release are summarized below.[282] The Commission is making minor changes in its analysis to recognize minor improvements in efficiency from changes to the amendments as adopted, but its conclusions regarding effects on competition and capital formation are not materially affected by the changes to the amendments or public comments.

1. Efficiency

In the Proposing Release, the Commission stated its preliminary belief that the proposed amendments would improve the efficiency of Industry Member implementation of CAT reporting. However, the Commission preliminarily believed that the financial accountability provisions could incentivize Participants to inefficiently delay certain activities associated with later milestones if Participants believe there is a significant risk of missing an earlier Financial Accountability Milestone.

The Commission is updating its analysis to recognize a possible improvement to efficiency relative to the amendments as proposed due to the elimination of the requirement that the Specified Data satisfy the initial error rates specified by Section 6.5(d)(i) of the CAT NMS Plan by December 31, 2021. As discussed below,[283] the Commission believes that the brief time interval between the date on which Industry Members commence reporting these transactions to CAT and the December 31, 2021 Financial Accountability Milestone date may not allow Participants to efficiently address any error rate problems in this data. As a result, including this error rate target in the December 31, 2021 Financial Accountability Milestone date might have caused inefficiencies in allocation of Participant and Industry Member staff time.

Two commenters agreed with the Commission's conclusion that the amendments are likely to improve efficiency. One commenter agreed with the Commission that ''additional Participant Accountability Milestones should facilitate the completion of the implementation phase(s) of CAT in an efficient, expeditious and risk-averse manner, thereby reducing the risk of further delay.'' [284] However, this commenter characterized its agreement on efficiency improvements as ''cautious'' due to specific potential indirect costs.[285] A second commenter agreed with the Commission's assessment of efficiency improvements for Industry Member implementation efforts, stating that ''[d]elays in CAT implementation have cost Industry Members both in hard dollars and opportunity costs''; the commenter also discussed resources devoted to CAT implementation or maintaining potentially duplicative reporting systems, stating ''the sooner the CAT is fully implemented, the sooner these duplicative reporting systems can be retired, and internal resources devoted to building the CAT, reallocated to other projects and initiatives.'' [286]

2. Competition

a. Competitive Baseline

In the Proposing Release, the Commission described the structure of the market for trading in NMS securities, as of that time.[287] While the Commission's analysis of the state of competition in the Proposing Release is fundamentally unchanged, the market for trading services in options and equities currently consists of 23 national securities exchanges and FINRA, all of which are Participants, as well as off-exchange trading venues, including broker-dealer internalizers, and 33 NMS stock alternative trading systems (''ATSs''),[288] which are not Participants. The exchanges are currently controlled by 7 separate entities; three of these operate a single exchange.[289]

[278] *See infra* Part IV.E.4., for further discussion of costs and benefits of the alternative approach proposed in the Proposing Release.

[279] *See infra* Part IV.D.1.

[280] *See supra* Part IV.B.

[281] *See supra* Part I.

[282] *See* Proposing Release, *supra* note 2, at Part IV.D.

[283] *See infra* Part IV.E.4.

[284] *See* FIF Letter, at 2.

[285] *See id.,* at 7; *see also supra* Part IV.C., for further discussion of indirect costs.

[286] *See* Fidelity Letter, at 3.

[287] *See* Proposing Release, *supra* note 2, at Part IV.D.2.

[288] As of April 30, 2020, there are 33 national market system ATSs operating pursuant to an initial Form ATS–N. See 17 CFR 242.304. A list of ATSs, including access to initial Form ATS–N filings that are effective, can be found on the Commission website at *https://www.sec.gov/divisions/marketreg/form-ats-n-filings.htm.*

[289] Cboe Global Markets, Inc. controls Cboe Exchange, Inc., Cboe C2 Exchange, Inc., Cboe BZX Exchange, Inc., Cboe BYX Exchange, Inc., Cboe EDGA Exchange, Inc., and Cboe EDGA Exchange, Inc.; Miami International Holdings, Inc. controls Miami International Securities Exchange LLC, MIAX Emerald, LLC, and MIAX PEARL, LLC; Nasdaq, Inc. controls Nasdaq BX, Inc., Nasdaq GEMX, LLC, Nasdaq ISE, LLC, Nasdaq MRX, LLC, Nasdaq PHLX, LLC, and The Nasdaq Stock Market LLC; Intercontinental Exchange, Inc. controls New York Stock Exchange, LLC, NYSE Arca, Inc., NYSE American LLC, NYSE Chicago, Inc., and NYSE National, Inc. The three entities that control a single-exchange are IEX Group, Inc. which controls Investors' Exchange LLC, BOX Holdings Group LLC which controls BOX Exchange LLC, and LTSE Group, Inc. which controls Long-Term Stock Exchange, Inc.

b. Competitive Effects

In the Proposing Release, the Commission stated its preliminary belief that the proposed amendments might have competitive effects on the market for NMS security trading services and the market for equity listings.[290] In the case that RFRRs are triggered, one or more exchanges might exit these markets, although the Commission continues to believe that this is unlikely. The Commission stated its belief that triggering an RFRR could also temporarily affect competition among exchanges and ATSs and broker-dealer internalizers, but did not believe the effects would be significant.

The Commission preliminarily believed that is it unlikely that exchanges would exit the market for NMS security trading services or equity listings if the RFRRs in the proposed amendments are triggered because such exchanges would be able to secure additional capital from a larger exchange group, or directly from capital markets.[291] If an exchange were to exit, the Commission continues to believe that this would not significantly impact competition in the market for exchange trading services or the market for equity listings because these markets are served by multiple competitors that are likely to swiftly meet any unsatisfied demand caused by the exit of a competitor.[292] If the RFRRs were triggered, the Commission continues to believe that it could temporarily affect competition between exchanges and ATSs and broker-dealer internalizers because of transient changes in Participants' and Industry Members' abilities to invest in their trading platforms.[293] However, the Commission continues to believe that effects, if any, would not be significant.

3. Capital Formation

In the Proposing Release, the Commission stated its belief that the amendments would have negligible mixed effects on capital formation.[294] The Commission preliminarily believed that the amendments' improvements to investor protections might allow improvements to capital formation described in the CAT NMS Plan Approval Order to be realized sooner than they would have otherwise been in the absence of the proposed amendments. However, if RFRRs are triggered, exchanges could experience short-term, transitory negative effects on exchange capital formation because the exchanges would face additional costs and may not be able to invest in projects or return profits to shareholders that they would otherwise. The Commission continues to believe that the amendments would not permanently affect investors' assessment of expected profitability for exchanges, and thus would not reduce this capital formation long-term.

E. Alternatives

1. Fixed versus Relative Financial Accountability Milestone Dates

Under the adopted amendments, Financial Accountability Milestone dates are fixed calendar dates. In the Proposing Release, the Commission considered an alternative approach that would use relative Financial Accountability Milestone dates in a scenario when a Financial Accountability Milestone was not met on schedule.[295] Under this alternative approach, the duration of the time period between two Financial Accountability Milestone dates would be fixed but the Financial Accountability Milestone dates would be relative. Thus, if a Financial Accountability Milestone were not achieved on schedule, the next Financial Accountability Milestone date would be delayed such that the duration between Financial Accountability Milestone dates was unchanged.[296]

The primary economic impact of this approach relative to the amendments as adopted is that it avoids a risk inherent in the fixed Financial Accountability Milestone date approach of the amendments as adopted. Under the fixed Financial Accountability Milestone date approach, if the Participants encounter a delay early in the implementation process that causes them to miss a Financial Accountability Milestone date by a significant margin, it may become more difficult for them to meet future Financial Accountability Milestone dates.

This alternative approach has two significant costs relative to the amendments as adopted. First, in a case where a significant delay arises in connection with an early Financial Accountability Milestone such that financial RFRRs are triggered, the Participants may be incentivized to delay meeting the requirements of that Financial Accountability Milestone in order to give themselves more time to achieve later Financial Accountability Milestones in order to decrease their risk of triggering RFRRs for those later Financial Accountability Milestones.

The second likely additional cost relative to the amendments as adopted is that the alternative approach would make the ultimate CAT implementation timeline less certain than in the amendments as adopted, because early delays would push back implementation dates for later phases of implementation.

The Commission did not receive any comments on the alternative and, for the reasons discussed throughout the release, the Commission is adopting the amendments substantially as proposed.

2. Different Timelines for Onset of RFRRs

In the Proposing Release, the Commission discussed alternative approaches with Financial Accountability Milestone dates either earlier or later than the dates in the amendments as adopted.[297] These approaches would have certain additional benefits and costs as compared to the amendments as adopted. The Commission stated that alternative milestone dates that are not generally aligned with dates published by or discussed with the Participants are less likely to reflect realistic expectations for the Participants in implementing the CAT.[298]

The Commission did not receive any comments on the alternative and, for the reasons discussed throughout the release, the Commission is adopting the amendments substantially as proposed.

3. Alternate Magnitudes of RFRRs

In the Proposing Release, the Commission discussed alternative approaches with different levels of RFRRs.[299] Under the amendments as

[290] *See* Proposing Release, *supra* note 2, at Part IV.D.2.

[291] *See* Proposing Release, *supra* note 2, at Part IV.D.2.

[292] *See* Proposing Release, *supra* note 2, at Part IV.D.2.b.

[293] *Id.*

[294] *See* Proposing Release, *supra* note 2, at Part IV.D.3.

[295] *See* Proposing Release, *supra* note 2, at Part IV.E.1.

[296] The alternative could be structured such that upon the achievement of one Financial Accountability Milestone, the next Financial Accountability Milestone date would become the later of the Financial Accountability Milestone date specified in the amendments or the relative date from this alternative approach. This approach would prevent the subsequent relative Financial Accountability Milestone date from becoming earlier in the event that the Participants achieve a Financial Accountability Milestone ahead of schedule. This would avoid the problem of incentivizing the Participants to delay Financial Accountability Milestone achievement to avoid accelerating Financial Accountability Milestone dates, and would mitigate any risk Industry Members would have from accelerating Financial Accountability Milestone dates.

[297] *See* Proposing Release, *supra* note 2, at Part IV.E.2.

[298] *See id.*

[299] *See* Proposing Release, *supra* note 2, at Part IV.E.3.

adopted, for each period of up to 90 days, or 45 days in the case of the first Financial Accountability Milestone, by which the Participants miss Financial Accountability Milestone dates, they would trigger RFRRs such that they would be allowed to recover 25 percent less of the CAT costs they would otherwise recover from Industry Members. Alternative approaches could have higher or lower marginal RFRRs.

The Commission preliminarily believed that alternative approaches with higher marginal RFRRs (allowing the Participants to recover a lower share of CAT costs from Industry Members when RFRRs are triggered) would potentially further incentivize the Participants to meet Financial Accountability Milestone deadlines, but would also increase the risk of inefficient acceleration of CAT implementation.

The Commission stated its preliminary belief that alternative approaches with lower RFRRs (allowing the Participants to recover a higher share of CAT costs from Industry Members when RFRRs are triggered) would decrease the incentives Participants have to meet Financial Accountability Milestone deadlines, but would reduce the risk of inefficient acceleration of CAT implementation.

The Commission did not receive any comments on the alternative and, for the reasons discussed throughout the release, the Commission is adopting the amendments substantially as proposed.

4. Requiring Error Rates for Manual and Complex Options Transactions, as Well as Allocation Information for All Options Transactions To Conform to Standards Set in the CAT NMS Plan on December 31, 2021

The Commission's proposed amendments would have required the Participants to achieve initial error rate targets for the Specified Data that are described in the CAT NMS Plan, by the December 31, 2021 milestone. Under the amendments as adopted, the December 31, 2021 Financial Accountability Milestone will not include those initial error rates for the Specified Data. The requirement will remain part of the December 31, 2022 milestone.

Under the proposed approach, error rates for the Specified Data would likely be lower in the period between when Industry Members begin reporting this data and December 31, 2021 because Participants would likely have devoted more resources in that period to measuring and lowering these error rates since they were included in the December 31, 2021 milestone. However, the Commission believes that this reduction in error rates would be unlikely to be significant because the time between the initiation of reporting of the Specified Data to CAT and the milestone date of December 31, 2021 is relatively short. It is not clear to the Commission that the Participants would have sufficient time to meaningfully address error rate deficiencies for the Specified Data during that interval of time.[300] Furthermore, the Commission believes it is likely the Participants can more efficiently address error rates in their members' data over a more reasonable period of time.

Under the proposed approach with the earlier milestone date for the error rates in question, it is possible that Participants would believe that triggering RFRRs was unavoidable. There is little time between the commencement of reporting of the Specified Data and the milestone date at which the target error rate would apply. This time span might be inadequate for the Participants to take corrective measures if the error rates exceeded the target specified in the CAT NMS Plan. Consequently, Participants might be *less* incentivized to achieve error rate targets for other CAT data elements if they believed it were unlikely they could achieve the error rates for the Specified Data, leaving them disincentivized to achieve other error rate targets because they believed RFRRs were unavoidable. This could result in higher error rates in other CAT data. In contrast, under the amendments as adopted with the later Financial Accountability Milestone date for the error rates in question, Participants will not be disincentivized by a Specified Data error target that may not be reasonable so quickly after the reporting of this data commences.

It is likely that the proposed approach with the earlier milestone dates for the error rates in question would be more costly both to Participants and Industry Members than the approach as adopted. Because the second Financial Accountability Milestone date occurs so quickly after the initiation of the Specified Data reporting, Participant efforts to address deficiencies in error rates might be made through channels that are less efficient in terms of overall quality of CAT data than they would be otherwise. For example, in an effort to avoid missing the error rate targets for the Specified Data, Participants might assign fewer staff persons to work with Industry Members to correct errors in core equities and options data that is foundational for CAT data to be used by regulators.

Finally, under the approach as adopted with a later Financial Accountability Milestone date for the error rates in question, regulators should still have access to sufficiently accurate and reliable options transactional data that will enable regulators to analyze the full lifecycle of most orders and conduct new and sophisticated analyses of the markets, including options market reconstruction and cross-market analyses across the majority of full order lifecycles. The Commission believes that the approach as adopted should not delay the retirement of OATS because the Specified Data is not included in OATS currently. The Commission acknowledges that error rates for the Specified Data might be higher than for other CAT data initially under the amendments as adopted, but Participants will need to achieve the error rate targets specified by Section 6.5(d)(i) of the CAT NMS Plan to satisfy the third and final milestone under the amendments, so any diminishment of data quality is likely to be temporary.

V. Regulatory Flexibility Act Certification

The Regulatory Flexibility Act (''RFA'')[301] requires Federal agencies, in promulgating rules, to consider the impact of those rules on small entities. Section 603(a)[302] of the Administrative Procedure Act,[303] as amended by the RFA, generally requires the Commission to undertake a regulatory flexibility analysis of all proposed rules, or proposed rule amendments, to determine the impact of such rulemaking on ''small entities.''[304] Section 605(b) of the RFA states that this requirement shall not apply ''to any proposed or final rule if the head of the agency certifies that the rule will not, if promulgated, have a significant

[300] Under the amendments as adopted, the Financial Accountability Milestones will not include these error rates for an additional year for the Specified Data. The Commission believes that Participants are likely to address problems in error rates in the Specified Data during the additional year because excessive errors in this data may trigger RFRRs at the December 31, 2022 milestone. However, the Commission acknowledges it is possible that error rates for the Specified Data will be higher than they would have been under the proposed amendments during that additional year because those error rates will not cause RFRRs to be triggered during that year.

[301] 5 U.S.C. 601 *et seq.*

[302] 5 U.S.C. 603(a).

[303] 5 U.S.C. 551 *et seq.*

[304] The Commission has adopted definitions for the term ''small entity'' for purposes of Commission rulemaking in accordance with the RFA. Those definitions, as relevant to this proposed rulemaking, are set forth in 17 CFR 240.0–10. *See* Securities Exchange Act Release No. 18451 (January 28, 1982), 47 FR 5215 (February 4, 1982) (File No. AS–305).

economic impact on a substantial number of small entities.'' [305]

The Commission certified in the Proposing Release, pursuant to Section 605(b) of the RFA, that the proposed amendments to the CAT NMS Plan would not, if adopted, have a significant impact on a substantial number of small entities.[306] The Commission received no comments on the RFA certification contained in the Proposing Release.

As explained in the Proposing Release, the amendments to the CAT NMS Plan only impose requirements on national securities exchanges registered with the Commission under Section 6 of the Exchange Act and FINRA.[307] With respect to the national securities exchanges, the Commission's definition of a small entity is an exchange that has been exempt from the reporting requirements of Rule 601 of Regulation NMS, and is not affiliated with any person (other than a natural person) that is not a small business or small organization.[308] None of the national securities exchanges registered under Section 6 of the Exchange Act that would be subject to the proposed rule are ''small entities'' for the purposes of the RFA. In addition, FINRA is not a ''small entity.'' [309] For these reasons, the amendments will not apply to any ''small entities.''

For these reasons, the Commission again certifies that the amendments, as modified and adopted, will not have a significant economic impact on a substantial number of small entities for the purposes of the RFA.

VI. Other Matters

Pursuant to the Congressional Review Act,[310] the Office of Information and Regulatory Affairs has designated these rules as not a ''major rule,'' as defined by 5 U.S.C. 804(2).

If any of the provisions of these final rules, or the application thereof to any person or circumstance, is held to be invalid, such invalidity shall not affect other provisions or application of such provisions to other persons or circumstances that can be given effect without the invalid provision or application.

VII. Statutory Authority and Text of the Amendments to the CAT NMS Plan

Pursuant to the Exchange Act and, particularly, Sections 2, 3(b), 5, 6, 11A, 15, 15A, 17(a) and (b), 19, and 23(a) thereof, 15 U.S.C. 78b, 78c(b), 78e, 78f, 78k–1, 78o, 78o–3, 78q(a) and (b), 78s, and 78w(a), and pursuant to Rule 608(a)(2) and (b)(2),[311] the Commission amends the CAT NMS Plan in the manner set forth below.

Additions are *italicized;* deletions are [bracketed].

* * * * *

Section 1.1 Definitions. As used throughout this Agreement (including, for the avoidance of doubt, the Exhibits, Appendices, Attachments, Recitals and Schedules identified in this Agreement):

* * * * *

''*Financial Accountability Milestone*'' *means, as the case may be, Full Implementation of Core Equity Reporting, Full Availability and Regulatory Utilization of Transactional Database Functionality, and Full Implementation of CAT NMS Plan Requirements.*

* * * * *

''*Full Availability and Regulatory Utilization of Transactional Database Functionality*'' *means the point at which: (a) reporting to the Order Audit Trail System (''OATS'') is no longer required for new orders; (b) Industry Member reporting for equities transactions and simple electronic options transactions, excluding Customer Account Information, Customer-ID, and Customer Identifying Information, with sufficient intra-firm linkage, inter-firm linkage, national securities exchange linkage, trade reporting facilities linkage, and representative order linkages (including any equities allocation information provided in an Allocation Report) to permit the Participants and the Commission to analyze the full lifecycle of an order across the national market system, from order origination through order execution or order cancellation, is developed, tested, and implemented at a 5% Error Rate or less; (c) Industry Member reporting for manual options transactions and complex options transactions, excluding Customer Account Information, Customer-ID, and Customer Identifying Information, with all required linkages to permit the Participants and the Commission to analyze the full lifecycle of an order across the national market system, from order origination through order execution or order cancellation, including any options allocation information provided in an Allocation Report, is developed, tested, and fully implemented; (d) the query tool functionality required by Section 6.10(c)(i)(A) and Appendix D, Sections 8.1.1–8.1.3, Section 8.2.1, and Section 8.5 incorporates the data described in conditions (b)–(c) and is available to the Participants and to the Commission; and (e) the requirements of Section 6.10(a) are met. This Financial Accountability Milestone shall be considered complete as of the date identified in a Quarterly Progress Report meeting the requirements of Section 6.6(c).*

''*Full Implementation of CAT NMS Plan Requirements*'' *means the point at which the Participants have satisfied all of their obligations to build and implement the CAT, such that all CAT system functionality required by Rule 613 and the CAT NMS Plan has been developed, successfully tested, and fully implemented at the initial Error Rates specified by Section 6.5(d)(i) or less, including functionality that efficiently permits the Participants and the Commission to access all CAT Data required to be stored in the Central Repository pursuant to Section 6.5(a), including Customer Account Information, Customer-ID, Customer Identifying Information, and Allocation Reports, and to analyze the full lifecycle of an order across the national market system, from order origination through order execution or order cancellation, including any related allocation information provided in an Allocation Report. This Financial Accountability Milestone shall be considered complete as of the date identified in a Quarterly Progress Report meeting the requirements of Section 6.6(c).*

''*Full Implementation of Core Equity Reporting Requirements*'' *means the point at which: (a) Industry Member reporting (excluding reporting by Small Industry Members that are not OATS reporters) for equities transactions, excluding Customer Account Information, Customer-ID, and Customer Identifying Information, is developed, tested, and implemented at a 5% Error Rate or less and with sufficient intra-firm linkage, inter-firm linkage, national securities exchange linkage, and trade reporting facilities linkage to permit the Participants and the Commission to analyze the full lifecycle of an order across the national market system, excluding linkage of representative orders, from order origination through order execution or order cancellation; and (b) the query tool functionality required by Section 6.10(c)(i)(A) and Appendix D, Sections 8.1.1–8.1.3 and Section 8.2.1 incorporates the Industry Member equities transaction data described in condition (a) and is available to the Participants and to the Commission. This Financial Accountability Milestone shall be considered complete as of the date identified in a Quarterly Progress Report meeting the requirements of Section 6.6(c).*

* * * * *

''*Initial Industry Member Core Equity and Option Reporting*'' *means the reporting by Industry Members (excluding Small Industry Members that are not OATS reporters) of both: (a) equities transaction data, excluding Customer Account Information, Customer-ID, and Customer Identifying Information; and (b) options transaction data, excluding Customer Account Information, Customer-ID, and Customer Identifying Information.*

* * * * *

ARTICLE VI

FUNCTIONS AND ACTIVITIES OF CAT SYSTEM

Section 6.1.–Section 6.5. No change.

[305] 5 U.S.C. 605(b).

[306] *See* Proposing Release, *supra* note 2, at 48488.

[307] *See id.*

[308] *See* 17 CFR 240.0–10(e).

[309] *See* Proposing Release, *supra* note 2, at 48488.

[310] 5 U.S.C. 801 *et seq.*

[311] 17 CFR 242.608(a)(2) and (b)(2). These provisions enable the Commission to propose amendments to any effective NMS Plan by ''publishing the text thereof, together with a statement of the purpose of such amendment,'' and providing ''interested persons an opportunity to submit written comments.''

Section 6.6. Written Assessments, Audits and Reports.

* * * * *

(c) Implementation Plan and Quarterly Progress Reports.

(i) Within 30 calendar days following the effective date of this provision, the Participants shall file with the Commission and make publicly available on each of their websites, or collectively on the CAT NMS Plan website, a complete CAT implementation plan that includes the Participants' timeline for achieving the objective milestones setting forth how and when the Participants will facilitate the achievement of Full Implementation of CAT NMS Plan Requirements (the ''Implementation Plan''). The Implementation Plan shall include:

(A) For each of the objective milestones set forth in Section C.10 of Appendix C of this Agreement to assess progress toward implementation of the CAT, the completion date and a description of the status; and

(B) For each of the Financial Accountability Milestones, the completion date and a description of the status.

If the Participants decide to complete any of the milestones identified in the Implementation Plan by releasing functionality in a phased approach, the Implementation Plan shall describe each phased release necessary to achieve the completion of the relevant milestone and provide completion dates for each such release identified.

(ii) Within 30 calendar days after the end of each calendar quarter, Participants shall file with the Commission and make publicly available on each of their websites, or collectively on the CAT NMS Plan website, a complete report that provides a detailed description of the progress made by the Participants during that calendar quarter toward achieving each of the milestones set forth in the Implementation Plan (the ''Quarterly Progress Report''). If, subsequent to the publication of the Implementation Plan, the Participants decide to complete any of the milestones set forth therein by releasing functionality in a phased approach, each Quarterly Progress Report shall reflect this change by describing the phases necessary to achieve the completion of the relevant milestone and providing the information specified below for each phase. The Participants shall file and make publicly available the first of such reports within 30 calendar days after the end of the calendar quarter in which the Participants filed and made publicly available the Implementation Plan.

(A) For each milestone completed by the end of a given calendar quarter, the report shall include the following: (1) The CAT implementation plan completion date, (2) the date on which the milestone was completed, and (3) a description of any variance from the Implementation Plan.

(B) For each milestone in progress at the end of a given calendar quarter, the report shall include the following: (1) The CAT implementation plan completion date, (2) the currently targeted completion date, and (3) a description of:

(a) The current status of the milestone;

(b) any difference between the CAT implementation plan completion date and the currently targeted completion date, including the basis for making the adjustment and the impact of this adjustment on any other milestone; and

(c) any other factual indicators that demonstrate the current level of completion with respect to the milestone.

(C) For each milestone that has not yet been initiated by the end of a given calendar quarter, the report shall include the following: (1) The CAT implementation plan completion date, (2) the currently targeted completion date, and (3) a description of:

(a) The current status of the milestone; and

(b) any difference between the Implementation Plan completion date and the currently targeted completion date, including the basis for making the adjustment and the impact of this adjustment on any other milestone.

(iii) The Implementation Plan and each Quarterly Progress Report shall be approved by at least a Supermajority Vote of the Operating Committee before such documents are filed with the Commission or made publicly available on each of the Participant websites or collectively on the CAT NMS Plan website. However, if the Implementation Plan or any Quarterly Progress Report is approved only by a Supermajority Vote of the Operating Committee, and not by a unanimous vote of the Operating Committee (including, for the avoidance of doubt, all members of the Operating Committee, whether or not present and whether or not recused), each Participant whose Operating Committee member did not vote to approve the Implementation Plan or Quarterly Progress Report shall separately file with the Commission a statement identifying itself and explaining why the member did not vote to approve the Implementation Plan or Quarterly Progress Report. These statements shall be made publicly available by each dissenting Participant on its website or collectively by all Participants on the CAT NMS Plan website. The Operating Committee shall submit the Implementation Plan and Quarterly Progress Reports to the Chief Executive Officer, President, or an equivalently situated senior officer of each Participant, prior to being voted on by the Operating Committee.

* * * * *

ARTICLE XI

FUNDING OF THE COMPANY

Section 11.1.–Section 11.5. No change.

Section 11.6. Funding Incentives for Post-Amendment Expenses. Notwithstanding the foregoing provisions, this Section shall apply with respect to all fees, costs, and expenses (including legal and consulting fees, costs, and expenses) incurred by or for the Company in connection with the development, implementation, and operation of the CAT from the effective date of this Section until such time as Full Implementation of CAT NMS Plan Requirements has been achieved (''Post-Amendment Expenses'').

(a) The following conditions shall apply to the collection of any fees established by the Operating Committee or implemented by the Participants to recover a portion of Post-Amendment Expenses from Industry Members (''Post-Amendment Industry Member Fees'').

(i) The Participants will be entitled to collect the full amount of:

(A) Any Post-Amendment Industry Member Fees established or implemented to recover Post-Amendment Expenses incurred from the effective date of this Section to the date of Initial Industry Member Core Equity and Option Reporting (''Period 1''), so long as such date is no later than July 31, 2020;

(B) Any Post-Amendment Industry Member Fees established or implemented to recover the Post-Amendment Expenses incurred from the date immediately following the achievement of Initial Industry Member Core Equity and Option Reporting to the date of Full Implementation of Core Equity Reporting (''Period 2''), so long as such date is no later than December 31, 2020;

(C) Any Post-Amendment Industry Member Fees established or implemented to recover the Post-Amendment Expenses incurred from the date immediately following the achievement of Full Implementation of Core Equity Reporting to the date of Full Availability and Regulatory Utilization of Transactional Database Functionality (''Period 3''), so long as such date is no later than December 31, 2021; and

(D) Any Post-Amendment Industry Member Fees established or implemented to recover the Post-Amendment Expenses incurred from the date immediately following the achievement of Full Availability and Regulatory Utilization of Transactional Database Functionality to the date of Full Implementation of CAT NMS Plan Requirements (''Period 4''), so long as such date is no later than December 30, 2022.

(ii) The amount of Post-Amendment Industry Member Fees that the Participants are entitled to collect for Period 1 will be reduced according to the following schedule if the Participants miss the deadline set forth for that Period:

(A) By 25% if the Participants miss the deadline set forth in Section 11.6(a)(i)(A) by less than 45 days;

(B) By 50% if the Participants miss the deadline set forth in Section 11.6(a)(i)(A) by 45 days or more, but less than 90 days;

(C) By 75% if the Participants miss the deadline set forth in Section 11.6(a)(i)(A) by 90 days or more, but less than 135 days; and

(D) By 100% if the Participants miss the deadline set forth in Section 11.6(a)(i)(A) by 135 days or more.

(iii) The amount of Post-Amendment Industry Member Fees that the Participants are entitled to collect for Periods 2, 3, and 4 will be reduced according to the following schedule if the Participants miss the deadline set forth for that Period:

(A) By 25% if the Participants miss the deadline set forth in Section 11.6(a)(i)(B)–(D) by less than 90 days;

(B) By 50% if the Participants miss the deadline set forth in Section 11.6(a)(i)(B)–(D) by 90 days or more, but less than 180 days;

(C) By 75% if the Participants miss the deadline set forth in Section 11.6(a)(i)(B)–(D) by 180 days or more, but less than 270 days; and

(D) By 100% if the Participants miss the deadline set forth in Section 11.6(a)(i)(B)–(D) by 270 days or more.

(iv) The Participants will only be permitted to collect Post-Amendment Industry Member Fees for Period 1, Period 2, Period 3, or Period 4 at the end of each respective Period.

(b) In all CAT NMS Plan amendments submitted by the Operating Committee to the Commission pursuant to Rule 608(b)(3)(i), and in all filings submitted by the Participants to the Commission under Section 19(b) of the Exchange Act, to establish or implement Post-Amendment Industry Member Fees pursuant to this Article, the Operating Committee or the Participants shall clearly indicate whether such fees are related to Post-Amendment Expenses incurred during Period 1, Period 2, Period 3, or Period 4.

* * * * *

By the Commission.

Dated: May 15, 2020.

J. Matthew DeLesDernier,

Assistant Secretary.

[FR Doc. 2020–10963 Filed 5–21–20; 8:45 am]

BILLING CODE 8011–01–P

FEDERAL REGISTER

Vol. 85 Friday,

No. 100 May 22, 2020

Part IV

The President

Executive Order 13924—Regulatory Relief To Support Economic Recovery

Federal Register
Vol. 85, No. 100
Friday, May 22, 2020

Presidential Documents

Title 3—

The President

Executive Order 13924 of May 19, 2020

Regulatory Relief To Support Economic Recovery

In December 2019, a novel coronavirus known as SARS–CoV–2 (''the virus'') was first detected in Wuhan, Hubei Province, People's Republic of China, causing an outbreak of the disease COVID–19, which has now spread globally. The Secretary of Health and Human Services declared a public health emergency on January 31, 2020, under section 319 of the Public Health Service Act (42 U.S.C. 247d), in response to COVID–19. In Proclamation 9994 of March 13, 2020 (Declaring a National Emergency Concerning the Novel Coronavirus Disease (COVID–19) Outbreak), I declared that the COVID–19 outbreak in the United States constituted a national emergency, beginning March 1, 2020.

I have taken sweeping action to control the spread of the virus in the United States, including by suspending entry of certain foreign nationals who present a risk of transmitting the virus; implementing policies to accelerate acquisition of personal protective equipment and bring new diagnostic capabilities to laboratories; and pressing forward rapidly in the search for effective treatments and vaccines. Our States, tribes, territories, local communities, health authorities, hospitals, doctors and nurses, manufacturers, and critical infrastructure workers have all performed heroic service on the front lines battling COVID–19. Executive departments and agencies (agencies), under my leadership, have helped them by taking hundreds of administrative actions since March, many of which provided flexibility regarding burdensome requirements that stood in the way of implementing the most effective strategies to stop the virus's spread.

The virus has attacked our Nation's economy as well as its health. Many businesses and non-profits have been forced to close or lay off workers, and in the last 8 weeks, the Nation has seen more than 36 million new unemployment insurance claims. I have worked with the Congress to provide vital relief to small businesses to keep workers employed and to bring assistance to those who have lost their jobs. On April 16, 2020, I announced Guidelines for Opening Up America Again, a framework for safely re-opening the country and putting millions of Americans back to work.

Just as we continue to battle COVID–19 itself, so too must we now join together to overcome the effects the virus has had on our economy. Success will require the efforts not only of the Federal Government, but also of every State, tribe, territory, and locality; of businesses, non-profits, and houses of worship; and of the American people. To aid those efforts, agencies must continue to remove barriers to the greatest engine of economic prosperity the world has ever known: the innovation, initiative, and drive of the American people.

By the authority vested in me as President by the Constitution and the laws of the United States of America, it is hereby ordered as follows:

Section 1. *Policy*. It is the policy of the United States to combat the economic consequences of COVID–19 with the same vigor and resourcefulness with which the fight against COVID–19 itself has been waged. Agencies should address this economic emergency by rescinding, modifying, waiving, or providing exemptions from regulations and other requirements that may inhibit economic recovery, consistent with applicable law and with protection of the public health and safety, with national and homeland security, and with budgetary priorities and operational feasibility. They should also give

businesses, especially small businesses, the confidence they need to reopen by providing guidance on what the law requires; by recognizing the efforts of businesses to comply with often-complex regulations in complicated and swiftly changing circumstances; and by committing to fairness in administrative enforcement and adjudication.

Sec. 2. *Definitions.* (a) ''Emergency authorities'' means any statutory or regulatory authorities or exceptions that authorize action in an emergency, in exigent circumstances, for good cause, or in similar situations.

(b) ''Agency'' has the meaning given in section 3502 of title 44, United States Code.

(c) ''Administrative enforcement'' includes investigations, assertions of statutory or regulatory violations, and adjudications by adjudicators as defined herein.

(d) ''Adjudicator'' means an agency official who makes a determination that has legal consequence, as defined in section 2(d) of Executive Order 13892 of October 9, 2019 (Promoting the Rule of Law Through Transparency and Fairness in Civil Administrative Enforcement and Adjudication), for a person, except that it does not mean the head of an agency, a member of a multi-member board that heads an agency, or a Presidential appointee.

(e) ''Pre-enforcement ruling'' has the meaning given it in section 2(f) of Executive Order 13892.

(f) ''Regulatory standard'' includes any requirement imposed on the public by a Federal regulation, as defined in section 2(g) of Executive Order 13892, or any recommendation, best practice, standard, or other, similar provision of a Federal guidance document as defined in section 2(c) of Executive Order 13892.

(g) ''Unfair surprise'' has the meaning given it in section 2(e) of Executive Order 13892.

Sec. 3. *Federal Response.* The heads of all agencies are directed to use, to the fullest extent possible and consistent with applicable law, any emergency authorities that I have previously invoked in response to the COVID–19 outbreak or that are otherwise available to them to support the economic response to the COVID–19 outbreak. The heads of all agencies are also encouraged to promote economic recovery through non-regulatory actions.

Sec. 4. *Rescission and waiver of regulatory standards.* The heads of all agencies shall identify regulatory standards that may inhibit economic recovery and shall consider taking appropriate action, consistent with applicable law, including by issuing proposed rules as necessary, to temporarily or permanently rescind, modify, waive, or exempt persons or entities from those requirements, and to consider exercising appropriate temporary enforcement discretion or appropriate temporary extensions of time as provided for in enforceable agreements with respect to those requirements, for the purpose of promoting job creation and economic growth, insofar as doing so is consistent with the law and with the policy considerations identified in section 1 of this order.

Sec. 5. *Compliance assistance for regulated entities.* (a) The heads of all agencies, excluding the Department of Justice, shall accelerate procedures by which a regulated person or entity may receive a pre-enforcement ruling under Executive Order 13892 with respect to whether proposed conduct in response to the COVID–19 outbreak, including any response to legislative or executive economic stimulus actions, is consistent with statutes and regulations administered by the agency, insofar as doing so is consistent with the law and with the policy considerations identified in section 1 of this order. Pre-enforcement rulings under this subsection may be issued without regard to the requirements of section 6(a) of Executive Order 13892.

(b) The heads of all agencies shall consider whether to formulate, and make public, policies of enforcement discretion that, as permitted by law and as appropriate in the context of particular statutory and regulatory

programs and the policy considerations identified in section 1 of this order, decline enforcement against persons and entities that have attempted in reasonable good faith to comply with applicable statutory and regulatory standards, including those persons and entities acting in conformity with a pre-enforcement ruling.

(c) As a result of the ongoing COVID–19 pandemic, the Department of Health and Human Services, including through the Centers for Disease Control and Prevention, and other agencies have issued, or plan to issue in the future, guidance on action suggested to stem the transmission and spread of that disease. In formulating any policies of enforcement discretion under subsection (b) of this section, an agency head should consider a situation in which a person or entity makes a reasonable attempt to comply with such guidance, which the person or entity reasonably deems applicable to its circumstances, to be a rationale for declining enforcement under subsection (b) of this section. Non-adherence to guidance shall not by itself form the basis for an enforcement action by a Federal agency.

Sec. 6. *Fairness in Administrative Enforcement and Adjudication.* The heads of all agencies shall consider the principles of fairness in administrative enforcement and adjudication listed below, and revise their procedures and practices in light of them, consistent with applicable law and as they deem appropriate in the context of particular statutory and regulatory programs and the policy considerations identified in section 1 of this order.

(a) The Government should bear the burden of proving an alleged violation of law; the subject of enforcement should not bear the burden of proving compliance.

(b) Administrative enforcement should be prompt and fair.

(c) Administrative adjudicators should be independent of enforcement staff.

(d) Consistent with any executive branch confidentiality interests, the Government should provide favorable relevant evidence in possession of the agency to the subject of an administrative enforcement action.

(e) All rules of evidence and procedure should be public, clear, and effective.

(f) Penalties should be proportionate, transparent, and imposed in adherence to consistent standards and only as authorized by law.

(g) Administrative enforcement should be free of improper Government coercion.

(h) Liability should be imposed only for violations of statutes or duly issued regulations, after notice and an opportunity to respond.

(i) Administrative enforcement should be free of unfair surprise.

(j) Agencies must be accountable for their administrative enforcement decisions.

Sec. 7. *Review of Regulatory Response.* The heads of all agencies shall review any regulatory standards they have temporarily rescinded, suspended, modified, or waived during the public health emergency, any such actions they take pursuant to section 4 of this order, and other regulatory flexibilities they have implemented in response to COVID–19, whether before or after issuance of this order, and determine which, if any, would promote economic recovery if made permanent, insofar as doing so is consistent with the policy considerations identified in section 1 of this order, and report the results of such review to the Director of the Office of Management and Budget, the Assistant to the President for Domestic Policy, and the Assistant to the President for Economic Policy.

Sec. 8. *Implementation.* The Director of the Office of Management and Budget, in consultation with the Assistant to the President for Domestic Policy and the Assistant to the President for Economic Policy, shall monitor

compliance with this order and may also issue memoranda providing guidance for implementing this order, including by setting deadlines for the reviews and reports required under section 7 of this order.

Sec. 9. *General Provisions.* (a) Nothing in this order shall be construed to impair or otherwise affect:

(i) the authority granted by law to an executive department or agency, or the head thereof; or

(ii) the functions of the Director of the Office of Management and Budget relating to budgetary, administrative, or legislative proposals.

(b) This order shall be implemented consistent with applicable law and subject to the availability of appropriations.

(c) Notwithstanding any other provision in this order, nothing in this order shall apply to any action that pertains to foreign or military affairs, or to a national security or homeland security function of the United States (other than procurement actions and actions involving the import or export of non-defense articles and services).

(d) This order is not intended to, and does not, create any right or benefit, substantive or procedural, enforceable at law or in equity by any party against the United States, its departments, agencies, or entities, its officers, employees, or agents, or any other person.

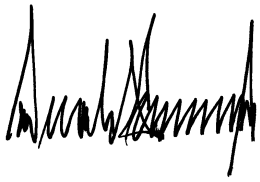

THE WHITE HOUSE,
May 19, 2020.

[FR Doc. 2020–11301
Filed 5–21–20; 11:15 am]
Billing code 3295–F0–P

Reader Aids

Federal Register

Vol. 85, No. 100

Friday, May 22, 2020

CUSTOMER SERVICE AND INFORMATION

Federal Register/Code of Federal Regulations	
General Information, indexes and other finding aids	**202–741–6000**
Laws	**741–6000**
Presidential Documents	
Executive orders and proclamations	**741–6000**
The United States Government Manual	**741–6000**
Other Services	
Electronic and on-line services (voice)	**741–6020**
Privacy Act Compilation	**741–6050**

ELECTRONIC RESEARCH

World Wide Web

Full text of the daily Federal Register, CFR and other publications is located at: **www.govinfo.gov.**

Federal Register information and research tools, including Public Inspection List and electronic text are located at: **www.federalregister.gov.**

E-mail

FEDREGTOC (Daily Federal Register Table of Contents Electronic Mailing List) is an open e-mail service that provides subscribers with a digital form of the Federal Register Table of Contents. The digital form of the Federal Register Table of Contents includes HTML and PDF links to the full text of each document.

To join or leave, go to **https://public.govdelivery.com/accounts/USGPOOFR/subscriber/new**, enter your email address, then follow the instructions to join, leave, or manage your subscription.

PENS (Public Law Electronic Notification Service) is an e-mail service that notifies subscribers of recently enacted laws.

To subscribe, go to **http://listserv.gsa.gov/archives/publaws-l.html and select** *Join or leave the list (or change settings);* then follow the instructions.

FEDREGTOC and **PENS** are mailing lists only. We cannot respond to specific inquiries.

Reference questions. Send questions and comments about the Federal Register system to: **fedreg.info@nara.gov**

The Federal Register staff cannot interpret specific documents or regulations.

FEDERAL REGISTER PAGES AND DATE, MAY

25279–26316 1
26319–26600 4
26601–26834 5
26835–27104 6
27105–27286 7
27287–27644 8
27645–27908 11
27909–28478 12
28479–28840 13
28841–29322 14
29323–29590 15
29591–29838 18
29839–30584 19
30585–30824 20
30825–31034 21
31035–31356 22

CFR PARTS AFFECTED DURING MAY

At the end of each month the Office of the Federal Register publishes separately a List of CFR Sections Affected (LSA), which lists parts and sections affected by documents published since the revision date of each title.

3 CFR

Proclamations:
9892 (superseded by 10034 30585
10016 26585
10017 26587
10018 26589
10019 26823
10020 26825
10021 26829
10022 26831
10023 26833
10024 27283
10025 27285
10026 27633
10027 27905
10028 27907
10029 28469
10030 28831
10031 28833
10032 28835
10033 28837
10034 30585
10035 30819
10036 30821
10037 30823

Executive Orders:
13917 26311
13918 26313
13919 26591
13920 26595
13921 28471
13922 30583
13923 30587
13924 31353

Administrative Orders:
Memorandums:
Memorandum of April 28, 2020 26315
Memorandum of May 8, 2020 28839
Memorandum of May 12, 2020 29591
Notices:
Notice of May 7, 2020 27639
Notice of May 7, 2020 27641
Notice of May 7, 2020 27643
Notice of May 13, 2020 29321
Notice of May 20, 2020 31033

5 CFR

Proposed Rules:
315 29348
335 29348

7 CFR

9 30825
205 27105
330 29790
340 29790
372 29790
932 28841
984 27107
1951 30835
4279 .....29593, 31035
4287 29593

Proposed Rules:
9 31062
271 29673
273 29673
905 27159
1217 27690
1250 27163

8 CFR

103 29264
208 29264
209 29264
212 29264
214 .....27645, 28843, 29264
235 29264
274a 28843, 29264

9 CFR

1 28772
2 28772
3 28772

10 CFR

50 26540
72 28479

Proposed Rules:
Ch. 1 .....27332, 29358
50 28436
52 28436
72 28521
430 .....25324, 26369, 29352, 30636, 30853, 31065
431 .....26626, 27929, 27941, 30878, 31065
1021 25338

12 CFR

3 29839
50 26835
217 29839
249 26835
324 29839
329 26835
1003 28364
1024 25279
1026 26319

Proposed Rules:
327 30649
1006 30890

13 CFR

113 27287
120 .....26321, 26324, 27287,

29842, 29845, 29847, 30835
121 ....29847, 30835
124 ....27290, 27650
125 27650
126 27650
127 27650

14 CFR

21 26326
39 ....26842, 27109, 27112, 27665, 27667, 27670, 27909, 29596, 29598, 29601, 30589, 30592, 30595, 30597, 30601, 30837, 30840, 31042, 31046
61 26326
63 26326
65 26326
71 ....25283, 26601, 26602, 26604, 26605, 26607, 26608, 26609, 26845, 26846, 27114, 27293, 27294, 27295, 27673, 27911, 27912, 27914, 27915, 27916, 28852, 30604, 31049
91 26326
95 29603
97 ....26611, 26613, 27917, 27919
107 26326
125 26326
141 26326

Proposed Rules:

39 ....25343, 25346, 25351, 25354, 26374, 26375, 26888, 26891, 26893, 26896, 27167, 27170, 28888, 28890, 28893, 28895, 29673, 29676, 30664, 30891, 31083
71 ....26898, 26901, 27172, 27174, 27176, 27178, 27180, 27181, 27183, 27184, 27186, 27188, 27189, 27333, 27334, 27337, 27339, 28523, 28897
399 26633

15 CFR

730 29849
732 29849
736 29849
744 ....29610, 29849
762 29610
801 31050
960 30790

Proposed Rules:

922 25357

16 CFR

1225 30605

Proposed Rules:

Ch. 1 ....27191, 29359
318 31085

17 CFR

23 27674
160 29611
200 ....25962, 28484, 29614
227 27116
230 ....25962, 28484, 29614
232 ....25962, 28484, 29614
239 ....25962, 27116, 28484, 29614
240 ....25962, 28484, 28853, 29614
270 ....25962, 28484, 29614
274 ....25962, 28484, 29614

Proposed Rules:

4 26378
50 27955
210 28734
270 28734

18 CFR

35 27681

19 CFR

Ch. 1 ....31057, 31059
103 31054
351 29615

20 CFR

404 30842
641 30608
655 30608
656 30608
658 30608
667 30608
683 30608
702 30608

21 CFR

888 26350

Proposed Rules:

73 27340
573 ....26902, 27692, 28898
1308 ....28899, 29359
1401 ....29366, 31087

22 CFR

120 25285
122 ....25285, 26847
123 25285
124 25285
129 25285

24 CFR

5 27133
891 27133
960 27133
962 27133

25 CFR

Proposed Rules:

82 26902

26 CFR

1 ....26848, 28867, 29323
54 26351

Proposed Rules:

1 ....25376, 27693, 28524, 28539, 29368, 31096
300 29878
301 29368

28 CFR

813 29863

29 CFR

2 30608
7 30608
8 30608
10 30608
13 30608
18 30608
24 30608
29 30608
38 30608
96 30608
471 30608
501 30608
580 30608
779 29867
1978 30608
1979 30608
1980 30608
1981 30608
1982 30608
1983 30608
1984 30608
1985 30608
1986 30608
1987 30608
1988 30608
2560 26351
2590 26351
4022 29323

Proposed Rules:

1695 30667

30 CFR

56 30627
57 30627
948 27139

Proposed Rules:

733 28904
736 28904
842 28904
935 26413

31 CFR

208 25285
541 31060

Proposed Rules:

800 30893

32 CFR

112 27157
144 27157
199 ....26355, 27921

33 CFR

100 26355
117 26358
165 ....26359, 26615, 28488, 29615

Proposed Rules:

100 ....26903, 27341, 28539, 29369, 31099, 31102
110 27343
117 ....28540, 28542, 28544, 28546
135 28802
138 28802
153 28802

34 CFR

106 30026

36 CFR

1253 26848
1290 26848
404 29621

37 CFR

202 27296

Proposed Rules:

360 26906

39 CFR

111 27299
3040 27301
3045 29324

Proposed Rules:

111 28917
501 30671

40 CFR

9 ....26617, 26617
52 ....25291, 25293, 25299, 25301, 25305, 26361, 27927, 28490, 28493, 28883, 29325, 29327, 29329, 29331, 29627, 29628, 30844
63 31286
70 29329
81 ....29331, 30844
131 28494
180 ....29338, 29340, 29630, 29633
721 26617

Proposed Rules:

2 31104
9 28140
22 29878
50 26634
52 ....25377, 25379, 26418, 26635, 26641, 26643, 26647, 26907, 27344, 27976, 28548, 28550, 28919, 29369, 29377, 29381, 29678, 29879, 29882, 29895, 31112, 31113, 31116, 31118
59 28140
60 ....28140, 31124
79 ....29034, 29906
80 ....29034, 29906
81 ....28550, 29381, 29895
85 28140
86 ....28140, 28564, 29034, 29906
88 28140
89 28140
90 28140
91 28140
92 28140
94 28140
124 29878
180 ....27346, 31130
228 31133
257 29878
258 27348
271 26911
300 27979
600 28564
721 ....26419, 29907
1027 28140
1033 28140
1036 28140
1037 ....28140, 29034, 29906
1039 28140
1042 28140
1043 28140
1045 28140
1048 28140
1051 28140
1054 28140
1060 28140
1065 28140
1066 28140
1068 28140
1090 ....29034, 29906

41 CFR

5–203 30608
60–30 30608

42 CFR

406 25508
407 25508
409 27550
410 27550
412 27550
413 27550
414 27550

415 27550
422 25508
423 25508
424 27550
425 27550
431 25508
438 25508
440 27550
457 25508
482 25508
483 27550
484 27550
485 25508
600 27550

Proposed Rules:

Ch. IV 26438

44 CFR

64 28499
333 28500

45 CFR

146 29164
149 29164
155 29164
156 ....25640, 27550, 29164
158 29164
160 29637
164 29637
170 25640
171 25640
1355 28410

46 CFR

30 27308
150 27308
153 27308
545 29638

47 CFR

11 30627
64 ....26857, 27309
76 26364
96 25309

Proposed Rules:

0 ....29914, 30672
1 ....26438, 29914
2 26438
18 26438
51 30899
54 ....25380, 26653, 30899, 31134
61 30899
63 29914
64 30672
69 30899
73 28586
79 30917

48 CFR

Ch. 1 ....27086, 27102
1 ....27087, 27088, 27098, 29666
2 27087
4 27101
5 ....27088, 29666
8 ....27088, 29666
9 ....27088, 29666
12 ....27088, 27098, 29666
13 ....27088, 29666
15 ....27088, 29666
19 ....27088, 27101, 29666
22 ....27087, 27088, 29666
25 ....27088, 27098, 27101, 29666
29 27098
30 ....27088, 29666
50 ....27088, 29666
52 ....27087, 27088, 27098, 27101, 29666

Proposed Rules:

25 28596

49 CFR

171 27810
172 27810
173 27810
174 27810
175 27810
176 27810
178 27810
180 27810
1250 30849
1333 ....26858, 26866
1570 25313

Proposed Rules:

171 30673
172 30673
173 30673
174 30673
177 30673
178 30673
179 30673
180 30673
Ch. X 26915
1201 30680

50 CFR

17 ....26786, 29532
91 27313
216 29666
219 27028
300 ....25315, 29666
635 26365
648 ....26874, 29345, 29870
660 ....27317, 27687
665 26622
679 ....27158, 29670, 30851

Proposed Rules:

92 27698
622 ....28924, 29916
648 27703

LIST OF PUBLIC LAWS

Note: No public bills which have become law were received by the Office of the Federal Register for inclusion in today's **List of Public Laws**.

Last List April 30, 2020

Public Laws Electronic Notification Service (PENS)

PENS is a free email notification service of newly enacted public laws. To subscribe, go to *https://listserv.gsa.gov/cgi-bin/wa.exe?SUBED1=PUBLAWS-L&A=1*

Note: This service is strictly for email notification of new laws. The text of laws is not available through this service. **PENS** cannot respond to specific inquiries sent to this address.