AUTHENTICATED
U.S. GOVERNMENT
INFORMATION
GPO

FEDERAL REGISTER

Vol. 85 Friday,
No. 65 April 3, 2020

Pages 18857–19076

OFFICE OF THE FEDERAL REGISTER

The **FEDERAL REGISTER** (ISSN 0097–6326) is published daily, Monday through Friday, except official holidays, by the Office of the Federal Register, National Archives and Records Administration, under the Federal Register Act (44 U.S.C. Ch. 15) and the regulations of the Administrative Committee of the Federal Register (1 CFR Ch. I). The Superintendent of Documents, U.S. Government Publishing Office, is the exclusive distributor of the official edition. Periodicals postage is paid at Washington, DC.

The **FEDERAL REGISTER** provides a uniform system for making available to the public regulations and legal notices issued by Federal agencies. These include Presidential proclamations and Executive Orders, Federal agency documents having general applicability and legal effect, documents required to be published by act of Congress, and other Federal agency documents of public interest.

Documents are on file for public inspection in the Office of the Federal Register the day before they are published, unless the issuing agency requests earlier filing. For a list of documents currently on file for public inspection, see *www.federalregister.gov.*

The seal of the National Archives and Records Administration authenticates the Federal Register as the official serial publication established under the Federal Register Act. Under 44 U.S.C. 1507, the contents of the **Federal Register** shall be judicially noticed.

The **Federal Register** is published in paper and on 24x microfiche. It is also available online at no charge at *www.govinfo.gov*, a service of the U.S. Government Publishing Office.

The online edition of the **Federal Register** is issued under the authority of the Administrative Committee of the Federal Register as the official legal equivalent of the paper and microfiche editions (44 U.S.C. 4101 and 1 CFR 5.10). It is updated by 6:00 a.m. each day the **Federal Register** is published and includes both text and graphics from Volume 1, 1 (March 14, 1936) forward. For more information, contact the GPO Customer Contact Center, U.S. Government Publishing Office. Phone 202-512-1800 or 866-512-1800 (toll free). E-mail, *gpocusthelp.com.*

The annual subscription price for the **Federal Register** paper edition is $860 plus postage, or $929, for a combined **Federal Register, Federal Register** Index and List of CFR Sections Affected (LSA) subscription; the microfiche edition of the **Federal Register** including the **Federal Register** Index and LSA is $330, plus postage. Six month subscriptions are available for one-half the annual rate. The prevailing postal rates will be applied to orders according to the delivery method requested. The price of a single copy of the daily **Federal Register,** including postage, is based on the number of pages: $11 for an issue containing less than 200 pages; $22 for an issue containing 200 to 400 pages; and $33 for an issue containing more than 400 pages. Single issues of the microfiche edition may be purchased for $3 per copy, including postage. Remit check or money order, made payable to the Superintendent of Documents, or charge to your GPO Deposit Account, VISA, MasterCard, American Express, or Discover. Mail to: U.S. Government Publishing Office—New Orders, P.O. Box 979050, St. Louis, MO 63197-9000; or call toll free 1-866-512-1800, DC area 202-512-1800; or go to the U.S. Government Online Bookstore site, see *bookstore.gpo.gov.*

There are no restrictions on the republication of material appearing in the **Federal Register.**

How To Cite This Publication: Use the volume number and the page number. Example: 85 FR 12345.

Postmaster: Send address changes to the Superintendent of Documents, Federal Register, U.S. Government Publishing Office, Washington, DC 20402, along with the entire mailing label from the last issue received.

SUBSCRIPTIONS AND COPIES

PUBLIC

Subscriptions:

Paper or fiche	**202–512–1800**
Assistance with public subscriptions	**202–512–1806**

General online information **202–512–1530; 1–888–293–6498**

Single copies/back copies:

Paper or fiche	**202–512–1800**
Assistance with public single copies	**1–866–512–1800 (Toll-Free)**

FEDERAL AGENCIES

Subscriptions:

Assistance with Federal agency subscriptions:

Email	*FRSubscriptions@nara.gov*
Phone	**202–741–6000**

The Federal Register Printing Savings Act of 2017 (Pub. L. 115-120) placed restrictions on distribution of official printed copies of the daily **Federal Register** to members of Congress and Federal offices. Under this Act, the Director of the Government Publishing Office may not provide printed copies of the daily **Federal Register** unless a Member or other Federal office requests a specific issue or a subscription to the print edition. For more information on how to subscribe use the following website link: *https://www.gpo.gov/frsubs.*

Printed on recycled paper.

Contents

Federal Register

Vol. 85, No. 65

Friday, April 3, 2020

Agency for Toxic Substances and Disease Registry
NOTICES
Agency Information Collection Activities; Proposals, Submissions, and Approvals, 18977–18978

Agriculture Department
NOTICES
Fiscal Year 2020 Tariff-Rate Quotas Increased for Raw Cane Sugar and Refined Sugar, 18913

Architectural and Transportation Barriers Compliance Board
NOTICES
Agency Information Collection Activities; Proposals, Submissions, and Approvals:
Online Architectural Barriers Act Complaint Form, 18913–18914

Centers for Disease Control and Prevention
NOTICES
Agency Information Collection Activities; Proposals, Submissions, and Approvals, 18979–18983

Civil Rights Commission
NOTICES
Meetings:
Rhode Island Advisory Committee, 18914–18915

Coast Guard
NOTICES
Meetings:
Merchant Mariner Medical Advisory Committee; April 2020 Teleconference, 19001
National Boating Safety Advisory Council; April 2020 Teleconference, 19002

Commerce Department
See International Trade Administration
See National Oceanic and Atmospheric Administration

Committee for Purchase From People Who Are Blind or Severely Disabled
NOTICES
Procurement List; Additions and Deletions, 18923–18925

Community Development Financial Institutions Fund
NOTICES
Funding Opportunity:
Applications for the Fiscal Year 2020 Funding Round of the Bank Enterprise Award Program, 19060–19073

Consumer Product Safety Commission
PROPOSED RULES
Safety Standard for Crib Bumpers/Liners, 18878–18901
NOTICES
Commission Agenda and Priorities; Extension of Time for Comments, 18925–18926

Defense Department
NOTICES
Privacy Act; Systems of Records, 18926–18928

Drug Enforcement Administration
NOTICES
Decision and Order:
Brewster Drug, Inc., 19020–19027
Gregory L. Molden, M.D., 19027–19029

Education Department
NOTICES
Agency Information Collection Activities; Proposals, Submissions, and Approvals:
Consolidation Loan Rebate Fee Report, 18944
William D. Ford Federal Direct Loan Program—150% Limitation, 18934–18935
Applications for New Awards:
Comprehensive Literacy State Development Program, 18935–18944
Teacher and School Leader Incentive Program, 18928–18934

Energy Department
See Federal Energy Regulatory Commission
See National Nuclear Security Administration
NOTICES
Application To Amend Existing Long-Term Authorizations To Export Liquefied Natural Gas to Non-Free Trade Agreement Countries:
Lake Charles Exports, LLC, 18944–18946
Lake Charles LNG Export Company, LLC, 18946–18947

Environmental Protection Agency
RULES
Air Quality State Implementation Plans; Approvals and Promulgations:
California; Northern Sierra Air Quality Management District; Reasonably Available Control Technology; Correcting Amendment, 18872–18873
NOTICES
Environmental Impact Statements; Availability, etc.:
Weekly Receipts, 18957
Meetings:
Asbestos; Draft Toxic Substances Control Act Risk Evaluation and Science Advisory Committee on Chemicals, 18954–18957
Science Advisory Board All-Ages Lead Model Review Panel, 18957–18958
Pesticide Product Registration:
Receipt of Applications for New Uses, 18952–18954
Receipt of Requests To Voluntarily Cancel Certain Pesticide Registrations, 18951–18952

Federal Aviation Administration
RULES
Airworthiness Directives:
The Boeing Company Airplanes, 18862–18868
Amendment of Class E Airspace and Establishment of Class E Airspace Extension:
Battle Mountain, NV, 18870–18872
Amendment of Jet Route J–37:
In the Vicinity of Atlanta, GA, 18869–18870

NOTICES
Environmental Assessments; Availability, etc.:
Federal Aviation Administration Finding of No Significant Impact and Record of Decision for Establishing the Playas Temporary Military Operations Area, and the Adoption of the United States Air Force, Davis-Monthan Air Force Base Personnel Recovery Training Program, 19055

Federal Communications Commission
PROPOSED RULES
Unlicensed White Space Device Operations in the Television Bands, 18901–18912
NOTICES
Agency Information Collection Activities; Proposals, Submissions, and Approvals, 18958–18962
Meetings:
Deletion of Items From March 31, 2020 Open Meeting, 18960–18961
North American Numbering Council, 18959–18960

Federal Emergency Management Agency
NOTICES
Final Flood Hazard Determinations, 19007–19009
Flood Hazard Determinations; Changes, 19004–19007, 19011–19013
Flood Hazard Determinations; Proposals, 19009–19010
Request for Applications:
Technical Mapping Advisory Council, 19010–19011

Federal Energy Regulatory Commission
NOTICES
Combined Filings, 18950–18951
Complaint:
City of Goose Creek v. South Carolina Public Service Authority, 18949
Environmental Assessments; Availability, etc.:
Douglas Leen, 18951
Filing:
Northern States Power Co., 18949
Institution of Section 206 Proceeding:
Energy Harbor LLC, 18949–18950

Federal Housing Finance Agency
NOTICES
Agency Information Collection Activities; Proposals, Submissions, and Approvals, 18962–18976

Federal Motor Carrier Safety Administration
NOTICES
Application for an Exemption from the Intermodal Association of North America:
Inspection, Repair and Maintenance; Inspector Qualifications, 19055–19056

Federal Reserve System
NOTICES
Change in Bank Control:
Acquisitions of Shares of a Bank or Bank Holding Company, 18977

Fish and Wildlife Service
NOTICES
DeChaux Habitat Conservation Plan for the Yelm Subspecies of the Mazama Pocket Gopher, Thurston County, Washington; Categorical Exclusion, 19016–19017
Environmental Assessments; Availability, etc.:
Block 12 Development Project, Kern County, CA; Draft Habitat Conservation Plan; Reopening of Public Comment Period, 19014
Environmental Impact Statements; Availability, etc.:
Skookumchuck Wind Energy Project Habitat Conservation Plan, Lewis and Thurston Counties, WA, 19014–19016

Food and Drug Administration
NOTICES
Agency Information Collection Activities; Proposals, Submissions, and Approvals:
Certification of Identity for Freedom of Information Act and Privacy Act Requests, 18984–18985
Cosmetic Labeling Regulations and Voluntary Cosmetic Registration Program, 18993–18995
Food Canning Establishment Registration, Process Filing, and Recordkeeping for Acidified Foods and Thermally Processed Low-Acid Foods in Hermetically Sealed Containers, 18995–18998
Generic Clearance for the Collection of Qualitative Feedback on Agency Service Delivery, 18989–18991
Good Manufacturing Practice in Manufacturing, Packaging, Labeling, or Holding Operations for Dietary Supplements, 18998–19000
Human Cells, Tissues, and Cellular and Tissue-Based Products: Establishment Registration and Listing; Eligibility Determination for Donors; and Current Good Tissue Practice, 18985–18989
Recommendations To Reduce the Risk of Transfusion–Transmitted of Infection in Whole Blood and Blood Components; Agency Guidance, 18983–18984
Special Protocol Assessment; Guidance for Industry, 18991–18992
Meetings:
Medical Device User Fee Amendments for Fiscal Years 2023 through 2027, 18992

Foreign Claims Settlement Commission
NOTICES
Completion of Claims Adjudication Program, 19029–19030

Health and Human Services Department
See Agency for Toxic Substances and Disease Registry
See Centers for Disease Control and Prevention
See Food and Drug Administration
See National Institutes of Health

Homeland Security Department
See Coast Guard
See Federal Emergency Management Agency
See U.S. Customs and Border Protection
NOTICES
Meetings:
President's National Infrastructure Advisory Council Meeting, 19013–19014

Indian Affairs Bureau
NOTICES
Meetings:
Tribal Consultation Regarding the Indian Employment, Training, and Related Services Demonstration Act, 19017–19018

Interior Department
See Fish and Wildlife Service
See Indian Affairs Bureau

See Land Management Bureau

International Trade Administration
NOTICES
Antidumping or Countervailing Duty Investigations, Orders, or Reviews:
Certain Carbon and Alloy Steel Cut-to-Length Plate From the People's Republic of China, 18915–18916
Circular Welded Carbon Steel Pipes and Tubes From the Republic of Turkey, 18917–18920
Fine Denier Polyester Staple Fiber From the Republic of India, 18916–18917

Justice Department
See Drug Enforcement Administration
See Foreign Claims Settlement Commission

Land Management Bureau
NOTICES
Environmental Impact Statements; Availability, etc.:
Fuels Reduction and Rangeland Restoration in the Great Basin; California, Idaho, Nevada, Oregon, Utah, and Washington, 19018
Tri-State Fuel Breaks Project, Idaho and Oregon, 19019–19020

Maritime Administration
NOTICES
Requested Administrative Waiver of the Coastwise Trade Laws:
Vessel CREOLA (Motor Vessel), 19059–19060
Vessel MASTIVIA (Motor Vessel), 19057–19058
Vessel MOBY (Sailboat), 19058–19059
Vessel WIDGEON (Motor Vessel), 19056–19057

National Credit Union Administration
NOTICES
Agency Information Collection Activities; Proposals, Submissions, and Approvals, 19030–19031

National Institutes of Health
NOTICES
Meetings:
National Institute of Allergy and Infectious Diseases, 19000
National Institute on Aging, 19000–19001
National Institute on Deafness and Other Communication Disorders, 19000

National Nuclear Security Administration
NOTICES
Environmental Impact Statements; Availability, etc.:
Plutonium Pit Production at the Savannah River Site in South Carolina and Announcement of Public Hearing, 18947–18948

National Oceanic and Atmospheric Administration
RULES
Fisheries of the Northeastern United States:
Northeast Multispecies Fishery; Adjustment of Georges Bank and Southern New England/Mid-Atlantic Yellowtail Flounder Annual Catch Limits, 18873–18875
NOTICES
Meetings:
Fisheries of the South Atlantic; South Atlantic Fishery Management Council, 18922–18923
Fisheries of the South Atlantic; Southeast Data, Assessment, and Review, 18921–18922
Mid-Atlantic Fishery Management Council, 18920
Pacific Fishery Management Council, 18920–18921
Takes of Marine Mammals Incidental to Specified Activities:
Hampton Roads Bridge-Tunnel Expansion Project, Hampton-Norfolk, VA, 18921

National Science Foundation
NOTICES
Request for Information:
Interagency Arctic Research Policy Committee, Chaired by the National Science Foundation, 19031–19032

Nuclear Regulatory Commission
RULES
List of Approved Spent Fuel Storage Casks:
TN Americas LLC NUHOMS EOS Dry Spent Fuel Storage System, Certificate of Compliance No. 1042, Amendment No. 1, 18857–18861
PROPOSED RULES
List of Approved Spent Fuel Storage Casks:
TN Americas LLC NUHOMS EOS Dry Spent Fuel Storage System, Certificate of Compliance No. 1042, Amendment No. 1, 18876–18878
NOTICES
Combined License Application:
Oklo, Inc.; Oklo Power, 19032

Postal Regulatory Commission
NOTICES
New Postal Products, 19032–19033

Securities and Exchange Commission
NOTICES
Agency Information Collection Activities; Proposals, Submissions, and Approvals, 19050–19052
Self-Regulatory Organizations; Proposed Rule Changes:
Fixed Income Clearing Corp., 19044–19047
Long-Term Stock Exchange, Inc., 19033–19037
National Securities Clearing Corp., 19037–19040
The Depository Trust Co., 19047–19050
The Nasdaq Stock Market LLC, 19042–19044
The Options Clearing Corp., 19040–19042

Small Business Administration
NOTICES
Disaster Declaration:
Disaster Declarations of Economic Injury for the Coronavirus (COVID–19), 19052–19053

Surface Transportation Board
NOTICES
Lease and Operation Exemption:
Belpre Industrial Parkersburg Railroad, LLC; CSX Transportation, Inc., 19053–19054
Raritan Central Railway, LLC; Consolidated Rail Corp., 19054

Transportation Department
See Federal Aviation Administration
See Federal Motor Carrier Safety Administration
See Maritime Administration

Treasury Department
See Community Development Financial Institutions Fund
See United States Mint

U.S. Customs and Border Protection
NOTICES
Quarterly IRS Interest Rates Used in Calculating Interest on Overdue Accounts and Refunds on Customs Duties, 19002–19004

United States Mint
NOTICES
Meetings:
Citizens Coinage Advisory Committee, 19073–19074

Veterans Affairs Department
NOTICES
Agency Information Collection Activities; Proposals, Submissions, and Approvals:
Principles of Excellence Complaint System Intake, 19075–19076
Report and Certification of Loan Disbursement, Request for Verification of Employment and Request for Verification of Deposit, 19074–19075
Request for Disinterment, 19074
Meetings:
National Academic Affiliations Council, 19074

Reader Aids

Consult the Reader Aids section at the end of this issue for phone numbers, online resources, finding aids, and notice of recently enacted public laws.

To subscribe to the Federal Register Table of Contents electronic mailing list, go to https://public.govdelivery.com/accounts/USGPOOFR/subscriber/new, enter your e-mail address, then follow the instructions to join, leave, or manage your subscription.

CFR PARTS AFFECTED IN THIS ISSUE

A cumulative list of the parts affected this month can be found in the Reader Aids section at the end of this issue.

10 CFR
72 18857
Proposed Rules:
72 18876

14 CFR
39 18862
71 (2 documents) 18869, 18870

16 CFR
Proposed Rules:
1112 18878
1130 18878
1240 18878

40 CFR
52 18872

47 CFR
Proposed Rules:
15 18901

50 CFR
648 18873

Rules and Regulations

Federal Register

Vol. 85, No. 65

Friday, April 3, 2020

This section of the FEDERAL REGISTER contains regulatory documents having general applicability and legal effect, most of which are keyed to and codified in the Code of Federal Regulations, which is published under 50 titles pursuant to 44 U.S.C. 1510.

The Code of Federal Regulations is sold by the Superintendent of Documents.

NUCLEAR REGULATORY COMMISSION

10 CFR Part 72

[NRC–2019–0224]

RIN 3150–AK40

List of Approved Spent Fuel Storage Casks: TN Americas LLC NUHOMS® EOS Dry Spent Fuel Storage System, Certificate of Compliance No. 1042, Amendment No. 1

AGENCY: Nuclear Regulatory Commission.

ACTION: Direct final rule.

SUMMARY: The U.S. Nuclear Regulatory Commission (NRC) is amending its spent fuel storage regulations by revising the TN Americas LLC NUHOMS® EOS Dry Spent Fuel Storage System listing within the ''List of approved spent fuel storage casks'' to include Amendment No. 1 to Certificate of Compliance No. 1042. Amendment No. 1 makes the following changes: Adds a new basket type (Type 4) to allow for the loading of intact, damaged, or failed fuel; adds another new basket type (Type 5) with low conductivity poison basket plates and low emissivity coated steel basket plates; accepts fuel assemblies with a minimum two-year cooling time, in selected locations within the basket; adds the NUHOMS® MATRIX design as an alternative to the EOS horizontal storage module design for the storage of spent fuel; and makes additional revisions to the certificate of compliance and the technical specifications for consistency and clarity. These changes are discussed in more detail in the ''Discussion of Changes'' section of this rule.

DATES: This direct final rule is effective June 17, 2020, unless any significant adverse comment is received by May 4, 2020. If this direct final rule is withdrawn as a result of such a comment, timely notice of the withdrawal will be published in the **Federal Register**. Comments received after this date will be considered if it is practical to do so, but the NRC is able to ensure consideration only for comments received on or before this date. Comments received on this direct final rule will also be considered to be comments on a companion proposed rule published in the Proposed Rules section of this issue of the **Federal Register**.

ADDRESSES: You may submit comments by any of the following methods:

- *Federal Rulemaking website:* Go to *https://www.regulations.gov* and search for Docket ID NRC–2019–0224. When preparing and submitting your comments, see ''Tips for Submitting Effective Comments'' at *https://www.regulations.gov/docs/Tips_For_Submitting_Effective_Comments.pdf.* Address questions about NRC dockets to Carol Gallagher; telephone: 301–415–3463; email: *Carol.Gallagher@nrc.gov.* For technical questions contact the individuals listed in the **FOR FURTHER INFORMATION CONTACT** section of this document.
- *Email comments to: Rulemaking.Comments@nrc.gov.* If you do not receive an automatic email reply confirming receipt, then contact us at 301–415–1677.
- *Fax comments to:* Secretary, U.S. Nuclear Regulatory Commission at 301–415–1101.
- *Mail comments to:* Secretary, U.S. Nuclear Regulatory Commission, Washington, DC 20555–0001, ATTN: Rulemakings and Adjudications Staff.
- *Hand deliver comments to:* 11555 Rockville Pike, Rockville, Maryland 20852, between 7:30 a.m. and 4:15 p.m. (Eastern Time) Federal workdays; telephone: 301–415–1677.

For additional direction on obtaining information and submitting comments, see Section I, ''Obtaining Information and Submitting Comments,'' in the **SUPPLEMENTARY INFORMATION** section of this document.

FOR FURTHER INFORMATION CONTACT: Christian Jacobs, Office of Nuclear Material Safety and Safeguards; telephone: 301–415–6825; email: *Christian.Jacobs@nrc.gov* or Nicole Fields, Office of Nuclear Material Safety and Safeguards; telephone: 630–829–9570; email: *Nicole.Fields@nrc.gov.* Both are staff of the U.S. Nuclear Regulatory Commission, Washington, DC 20555–0001.

SUPPLEMENTARY INFORMATION:

Table of Contents

I. Obtaining Information and Submitting Comments
II. Rulemaking Procedure
III. Background
IV. Discussion of Changes
V. Voluntary Consensus Standards
VI. Agreement State Compatibility
VII. Plain Writing
VIII. Environmental Assessment and Finding of No Significant Impact
IX. Paperwork Reduction Act Statement
X. Regulatory Flexibility Certification
XI. Regulatory Analysis
XII. Backfitting and Issue Finality
XIII. Congressional Review Act
XIV. Availability of Documents

I. Obtaining Information and Submitting Comments

A. Obtaining Information

Please refer to Docket ID NRC–2019–0224 when contacting the NRC about the availability of information for this action. You may obtain publicly-available information related to this action by any of the following methods:

- *Federal Rulemaking website:* Go to *https://www.regulations.gov* and search for Docket ID NRC–2019–0224.
- *NRC's Agencywide Documents Access and Management System (ADAMS):* You may obtain publicly-available documents online in the ADAMS Public Documents collection at *https://www.nrc.gov/reading-rm/adams.html.* To begin the search, select ''Begin Web-based ADAMS Search.'' For problems with ADAMS, please contact the NRC's Public Document Room (PDR) reference staff at 1–800–397–4209, 301–415–4737, or by email to *pdr.resource@nrc.gov.* For the convenience of the reader, instructions about obtaining materials referenced in this document are provided in Section XIV, ''Availability of Documents,'' in this document.
- *NRC's PDR:* You may examine and purchase copies of public documents at the NRC's PDR, Room O1–F21, One White Flint North, 11555 Rockville Pike, Rockville, Maryland 20852.

B. Submitting Comments

Please include Docket ID NRC–2019–0224 in your comment submission.

The NRC cautions you not to include identifying or contact information that you do not want to be publicly disclosed in your comment submission. The NRC will post all comment

submissions at *https://www.regulations.gov* as well as enter the comment submissions into ADAMS. The NRC does not routinely edit comment submissions to remove identifying or contact information.

If you are requesting or aggregating comments from other persons for submission to the NRC, then you should inform those persons not to include identifying or contact information that they do not want to be publicly disclosed in their comment submission. Your request should state that the NRC does not routinely edit comment submissions to remove such information before making the comment submissions available to the public or entering the comment into ADAMS.

II. Rulemaking Procedure

This rule is limited to the changes contained in Amendment No. 1 to Certificate of Compliance No. 1042 and does not include other aspects of the TN Americas LLC NUHOMS® EOS Dry Spent Fuel Storage System design. The NRC is using the ''direct final rule procedure'' to issue this amendment because it represents a limited and routine change to an existing certificate of compliance that is expected to be non-controversial. Adequate protection of public health and safety continues to be ensured. The amendment to the rule will become effective on June 17, 2020. However, if the NRC receives any significant adverse comment on this direct final rule by May 4, 2020, then the NRC will publish a document that withdraws this action and will subsequently address the comments received in a final rule as a response to the companion proposed rule published in the Proposed Rules section of this issue of the **Federal Register**. Absent significant modifications to the proposed revisions requiring republication, the NRC will not initiate a second comment period on this action.

A significant adverse comment is a comment where the commenter explains why the rule would be inappropriate, including challenges to the rule's underlying premise or approach, or would be ineffective or unacceptable without a change. A comment is adverse and significant if:

(1) The comment opposes the rule and provides a reason sufficient to require a substantive response in a notice-and-comment process. For example, a substantive response is required when:

(a) The comment causes the NRC to reevaluate (or reconsider) its position or conduct additional analysis;

(b) The comment raises an issue serious enough to warrant a substantive response to clarify or complete the record; or

(c) The comment raises a relevant issue that was not previously addressed or considered by the NRC.

(2) The comment proposes a change or an addition to the rule, and it is apparent that the rule would be ineffective or unacceptable without incorporation of the change or addition.

(3) The comment causes the NRC to make a change (other than editorial) to the rule, certificate of compliance, or technical specifications.

III. Background

Section 218(a) of the Nuclear Waste Policy Act of 1982, as amended, requires that ''[t]he Secretary [of the Department of Energy] shall establish a demonstration program, in cooperation with the private sector, for the dry storage of spent nuclear fuel at civilian nuclear power reactor sites, with the objective of establishing one or more technologies that the [Nuclear Regulatory] Commission may, by rule, approve for use at the sites of civilian nuclear power reactors without, to the maximum extent practicable, the need for additional site-specific approvals by the Commission.'' Section 133 of the Nuclear Waste Policy Act states, in part, that ''[the Commission] shall, by rule, establish procedures for the licensing of any technology approved by the Commission under Section 219(a) [sic: 218(a)] for use at the site of any civilian nuclear power reactor.''

To implement this mandate, the Commission approved dry storage of spent nuclear fuel in NRC-approved casks under a general license by publishing a final rule that added a new subpart K in part 72 of title 10 of the *Code of Federal Regulations* (10 CFR) entitled, ''General License for Storage of Spent Fuel at Power Reactor Sites.'' This rule also established a new subpart L in 10 CFR part 72 entitled, ''Approval of Spent Fuel Storage Casks,'' which contains procedures and criteria for obtaining NRC approval of spent fuel storage cask designs. The NRC subsequently issued a direct final rule on March 24, 2017, that approved the TN Americas LLC NUHOMS® EOS Dry Spent Fuel Storage System design and added it to the list of NRC-approved cask designs in § 72.214 as Certificate of Compliance No. 1042.

IV. Discussion of Changes

On February 15, 2018, as supplemented on June 14, 2018, August 30, 2018, February 19, 2019, March 21, 2019, June 19, 2019, July 16, 2019, July 17, 2019, August 29, 2019, and October 1, 2019, TN Americas LLC submitted a request to amend Certificate of Compliance No. 1042 for the NUHOMS® EOS Dry Spent Fuel Storage System. Amendment No. 1 makes the following five changes:

(1) Adds a new basket type (Type 4) to allow for the loading of intact, damaged, or failed fuel. The new Type 4 basket with staggered alignment of the steel, aluminum, and poison basket plates is for the EOS–37PTH dry shielded canister. An option (Type 4L) is also added for the Type 4 basket, which has steel basket plates with a low emissivity coating and poison basket plates with low conductivity. The Type 4 basket has the ability to be stored in either the EOS horizontal storage module (EOS–HSM) or the new NUHOMS® MATRIX (HSM–MX) design. This change allows for the loading of damaged or failed fuel. The initial Certificate of Compliance No. 1042 does not allow for the loading of damaged or failed fuel. Six new heat load zone configurations for the EOS–37PTH dry shielded canister are added for the new Type 4 basket.

(2) Adds another new basket type (Type 5) with low conductivity poison basket plates and low emissivity coated steel basket plates. The new Type 5 basket for the EOS–37PTH dry shielded canister is comparable in geometry to existing Types 1, 2 and 3 baskets. The Type 5 basket has the ability to be stored in either the EOS–HSM or the new HSM–MX design. Four of the six new heat load zone configurations added for the Type 4 basket are also added for the Type 5 basket.

(3) Accepts fuel assemblies with a minimum two-year cooling time, in selected locations within the basket. This change is applicable to the EOS–37PTH dry shielded canister.

(4) Adds the HSM–MX design as an alternative to the EOS–HSM design for the storage of spent fuel. The new HSM–MX design is an alternative for either an EOS–37PTH dry shielded canister or an EOS–89BTH dry shielded canister. The HSM–MX is a reinforced concrete monolithic modular structure, which is similar to the EOS–HSM reinforced concrete modular structure except that the HSM–MX is a staggered, two-tiered modular structure.

(5) Makes additional revisions to the certificate of compliance and the technical specifications for consistency and clarity. These revisions are described in the application package.

As documented in the preliminary safety evaluation report, the NRC performed a safety evaluation of the proposed certificate of compliance amendment request. There are no significant changes to cask design

requirements in the proposed amendment. The design of the cask would prevent loss of containment, shielding, and criticality control in the event of each evaluated accident condition. This amendment does not reflect a significant change in design or fabrication of the cask. In addition, any resulting occupational exposure or offsite dose rates from the implementation of Amendment No. 1 would remain well within the limits specified by 10 CFR part 20, ''Standards for Protection Against Radiation.'' There will be no significant change in the types or amounts of any effluent released, no significant increase in the individual or cumulative radiation exposure, and no significant increase in the potential for, or consequences from, radiological accidents.

The amended TN Americas LLC NUHOMS® EOS Dry Spent Fuel Storage System design, when used under the conditions specified in the certificate of compliance, the technical specifications, and the NRC's regulations, will meet the requirements of 10 CFR part 72; therefore, adequate protection of public health and safety will continue to be reasonably assured. When this direct final rule becomes effective, persons who hold a general license under § 72.210 may, consistent with the license conditions under § 72.212, load spent nuclear fuel into TN Americas LLC NUHOMS® EOS Dry Spent Fuel Storage System casks that meet the criteria of Amendment No. 1 to Certificate of Compliance No. 1042.

V. Voluntary Consensus Standards

The National Technology Transfer and Advancement Act of 1995 (Pub. L. 104–113) requires that Federal agencies use technical standards that are developed or adopted by voluntary consensus standards bodies unless the use of such a standard is inconsistent with applicable law or otherwise impractical. In this direct final rule, the NRC adds an amendment to the TN Americas LLC NUHOMS® EOS Dry Spent Fuel Storage System design listed in 10 CFR 72.214, ''List of approved spent fuel storage casks.'' This action does not constitute the establishment of a standard that contains generally applicable requirements.

VI. Agreement State Compatibility

Under the ''Agreement State Program Policy Statement'' approved by the Commission on October 2, 2017, and published in the **Federal Register** on October 18, 2017, this rule is classified as Compatibility Category ''NRC.'' Compatibility is not required for Category ''NRC'' regulations. The NRC program elements in this category are those that relate directly to areas of regulation reserved to the NRC by the Atomic Energy Act of 1954, as amended, or the provisions of 10 CFR chapter I. Although an Agreement State may not adopt program elements reserved to the NRC, and the Category ''NRC'' does not confer regulatory authority on the State, the State may wish to inform its licensees of certain requirements by means consistent with the particular Agreement State's administrative procedure laws.

VII. Plain Writing

The Plain Writing Act of 2010 (Pub. L. 111–274) requires Federal agencies to write documents in a clear, concise, and well-organized manner. The NRC has written this document to be consistent with the Plain Writing Act as well as the Presidential Memorandum, ''Plain Language in Government Writing,'' published June 10, 1998.

VIII. Environmental Assessment and Finding of no Significant Impact

Under the National Environmental Policy Act of 1969, as amended, and the NRC's regulations in 10 CFR part 51, ''Environmental Protection Regulations for Domestic Licensing and Related Regulatory Functions,'' the NRC has determined that this direct final rule, if adopted, would not be a major Federal action significantly affecting the quality of the human environment and, therefore, an environmental impact statement is not required. The NRC has made a finding of no significant impact on the basis of this environmental assessment.

A. The Action

The action is to amend § 72.214 to revise the TN Americas LLC NUHOMS® EOS Dry Spent Fuel Storage System listing within the ''List of approved spent fuel storage casks'' to include Amendment No. 1 to Certificate of Compliance No. 1042.

B. The Need for the Action

This direct final rule amends the certificate of compliance for the TN Americas LLC NUHOMS® EOS Dry Spent Fuel Storage System design within the list of approved spent fuel storage casks that power reactor licensees can use to store spent fuel at reactor sites under a general license. Specifically, Amendment No. 1 makes the following changes: (1) adds a new basket type (Type 4) to allow for the loading of intact, damaged, or failed fuel; (2) adds another new basket type (Type 5) with low conductivity poison basket plates and low emissivity coated steel basket plates; (3) accepts fuel assemblies with a minimum two-year cooling time, in selected locations within the basket; (4) adds the HSM–MX design as an alternative to the EOS–HSM design for the storage of spent fuel; and (5) makes additional revisions to the certificate of compliance and the technical specifications for consistency and clarity.

C. Environmental Impacts of the Action

On July 18, 1990, the NRC issued an amendment to 10 CFR part 72 to provide for the storage of spent fuel under a general license in cask designs approved by the NRC. The potential environmental impact of using NRC-approved storage casks was analyzed in an environmental assessment for the 1990 final rule. The environmental assessment for Amendment No. 1 tiers off of the environmental assessment for the July 18, 1990, final rule. Tiering on past environmental assessments is a standard process under the National Environmental Policy Act of 1969, as amended.

The TN Americas LLC NUHOMS® EOS Dry Spent Fuel Storage System is designed to mitigate the effects of design basis accidents that could occur during storage. Design basis accidents account for human-induced events and the most severe natural phenomena reported for the site and surrounding area. Postulated accidents analyzed for an independent spent fuel storage installation, the type of facility at which a holder of a power reactor operating license would store spent fuel in casks in accordance with 10 CFR part 72, can include tornado winds and tornado-generated missiles, a design basis earthquake, a design basis flood, an accidental cask drop, lightning effects, fires, explosions, and other incidents.

The design of the cask would still prevent loss of confinement, shielding, and criticality control in the event of an accident. If there is no loss of confinement, shielding, or criticality control, the environmental impacts resulting from an accident would be insignificant. This amendment does not reflect a significant change in design or fabrication of the cask.

Because there are no significant design or process changes, any resulting occupational exposure or offsite dose rates from the implementation of Amendment No. 1 would remain well within the 10 CFR part 20 limits. Therefore, the proposed changes will not result in any radiological or non-radiological environmental impacts that significantly differ from the environmental impacts evaluated in environmental assessment supporting

the July 18, 1990, final rule. There will be no significant change in the types or significant revisions in the amounts of any effluent released, no significant increase in the individual or cumulative radiation exposures, and no significant increase in the potential for, or consequences from, radiological accidents. The NRC documented its safety findings in the preliminary safety evaluation report.

D. Alternative to the Action

The alternative to this action is to deny approval of Amendment No. 1 and not issue the direct final rule. Consequently, any 10 CFR part 72 general licensee that seeks to load spent nuclear fuel into the TN Americas LLC NUHOMS® EOS Dry Spent Fuel Storage System in accordance with the changes described in proposed Amendment No. 1 would have to request an exemption from the requirements of §§ 72.212 and 72.214. Under this alternative, interested licensees would have to prepare, and the NRC would have to review, a separate exemption request, thereby increasing the administrative burden upon the NRC and the costs to each licensee. The environmental impacts would be the same as the proposed action.

E. Alternative Use of Resources

Approval of Amendment No. 1 to Certificate of Compliance No. 1042 would result in no irreversible commitment of resources.

F. Agencies and Persons Contacted

No agencies or persons outside the NRC were contacted in connection with the preparation of this environmental assessment.

G. Finding of No Significant Impact

The environmental impacts of the action have been reviewed under the requirements in the National Environmental Policy Act of 1969, as amended, and the NRC's regulations in subpart A of 10 CFR part 51. Based on the foregoing environmental assessment, the NRC concludes that this direct final rule entitled, ''List of Approved Spent Fuel Storage Casks: TN Americas LLC NUHOMS® EOS Dry Spent Fuel Storage System, Certificate of Compliance No. 1042, Amendment No. 1,'' will not have a significant effect on the human environment. Therefore, the NRC has determined that an environmental impact statement is not necessary for this direct final rule.

IX. Paperwork Reduction Act Statement

This direct final rule does not contain any new or amended collections of information subject to the Paperwork Reduction Act of 1995 (44 U.S.C. 3501 *et seq.*). Existing collections of information were approved by the Office of Management and Budget, approval number 3150–0132.

Public Protection Notification

The NRC may not conduct or sponsor, and a person is not required to respond to, a request for information or an information collection requirement unless the requesting document displays a currently valid Office of Management and Budget control number.

X. Regulatory Flexibility Certification

Under the Regulatory Flexibility Act of 1980 (5 U.S.C. 605(b)), the NRC certifies that this direct final rule will not, if issued, have a significant economic impact on a substantial number of small entities. This direct final rule affects only nuclear power plant licensees and TN Americas LLC. These entities do not fall within the scope of the definition of small entities set forth in the Regulatory Flexibility Act or the size standards established by the NRC (10 CFR 2.810).

XI. Regulatory Analysis

On July 18, 1990, the NRC issued an amendment to 10 CFR part 72 to provide for the storage of spent nuclear fuel under a general license in cask designs approved by the NRC. Any nuclear power reactor licensee can use NRC-approved cask designs to store spent nuclear fuel if it: (1) Notifies the NRC in advance; (2) the spent fuel is stored under the conditions specified in the cask's certificate of compliance; and (3) the conditions of the general license are met. A list of NRC-approved cask designs is contained in § 72.214. On March 24, 2017, the NRC issued an amendment to 10 CFR part 72 that approved the NUHOMS® EOS Dry Spent Fuel Storage System design by adding it to the list of NRC-approved cask designs in § 72.214.

On February 15, 2018, as supplemented on June 14, 2018, August 30, 2018, February 19, 2019, March 21, 2019, June 19, 2019, July 16, 2019, July 17, 2019, August 29, 2019, and October 1, 2019, TN Americas LLC submitted a request to amend the NUHOMS® EOS Dry Spent Fuel Storage System as described in Section IV, ''Discussion of Changes,'' of this document.

The alternative to this action is to withhold approval of Amendment No. 1 and to require any 10 CFR part 72 general licensee seeking to load spent nuclear fuel into TN Americas LLC NUHOMS® EOS Dry Spent Fuel Storage System under the changes described in Amendment No. 1 to request an exemption from the requirements of §§ 72.212 and 72.214. Under this alternative, each interested 10 CFR part 72 licensee would have to prepare, and the NRC would have to review, a separate exemption request, thereby increasing the administrative burden on the NRC and the costs to each licensee.

Approval of this direct final rule is consistent with previous NRC actions. Further, as documented in the preliminary safety evaluation report and environmental assessment, this direct final rule will have no adverse effect on public health and safety or the environment. This direct final rule has no significant identifiable impact or benefit on other government agencies. Based on this regulatory analysis, the NRC concludes that the requirements of this direct final rule are commensurate with the NRC's responsibilities for public health and safety and the common defense and security. No other available alternative is believed to be as satisfactory; therefore, this action is recommended.

XII. Backfitting and Issue Finality

The NRC has determined that the backfit rule (§ 72.62) does not apply to this direct final rule. Therefore, a backfit analysis is not required. This direct final rule revises Certificate of Compliance No. 1042 for the TN Americas LLC NUHOMS® EOS Dry Spent Fuel Storage System, as currently listed in § 72.214. The revision consists of the changes in Amendment No. 1 previously described, as set forth in the revised certificate of compliance and technical specifications.

Amendment No. 1 to Certificate of Compliance No. 1042 for the TN Americas LLC NUHOMS® EOS Dry Spent Fuel Storage System was initiated by TN Americas LLC and was not submitted in response to new NRC requirements, or an NRC request for amendment. Amendment No. 1 applies only to new casks fabricated and used under Amendment No. 1. These changes do not affect existing users of the TN Americas LLC NUHOMS® EOS Dry Spent Fuel Storage System, and the initial Certificate of Compliance No. 1042 continues to be effective for existing users. While current users of this storage system may comply with the new requirements in Amendment No. 1, this would be a voluntary decision on the part of current users.

For these reasons, Amendment No. 1 to Certificate of Compliance No. 1042

does not constitute backfitting under § 72.62 or § 50.109(a)(1), or otherwise represent an inconsistency with the issue finality provisions applicable to combined licenses in 10 CFR part 52. Accordingly, the NRC has not prepared a backfit analysis for this rulemaking.

XIII. Congressional Review Act

This direct final rule is not a rule as defined in the Congressional Review Act (5 U.S.C. 801 *et seq.*).

XIV. Availability of Documents

The documents identified in the following table are available to interested persons through one or more of the following methods, as indicated.

Document	ADAMS accession No./ **Federal Register** citation
Proposed Certificate of Compliance No. 1042, Amendment No. 1	ML19290H608.
Proposed Technical Specifications, Certificate of Compliance No. 1042, Amendment No. 1, Appendix A	ML19290H605.
Preliminary Safety Evaluation Report, Certificate of Compliance No. 1042, Amendment No. 1	ML19290H606.
Application for Amendment 1 to the NUHOMS EOS System, Revision 0, dated February 15, 2018	ML18053A220 (package).
Acceptance Review of TN Americas, LLC Application for Certificate of Compliance No. 1042, Amendment 1 to NUHOMS EOS System, Rev. 1—Response to Request for Supplemental Information, dated June 14, 2018.	ML18178A029 (package).
Acceptance Review (Continued) of TN Americas LLC Application for Certificate of Compliance No. 1042, Amendment No. 1, to the NUHOMS EOS System, Revision 2—Response to Second Request for Supplemental Information, dated August 30, 2018.	ML18255A124 (package).
Application for Amendment 1 to NUHOMS EOS Certificate of Compliance No. 1042, Rev. 3—Response to Request for Additional Information, dated February 19, 2019.	ML19058A410 (package).
Application for Amendment 1 to NUHOMS EOS Certificate of Compliance No. 1042, Revision 4—Computer Files Associated with Certain CoC 1042 Amendment 1 Request for Additional Information Items (Docket No. 72–1042, CAC No. 001028, EPID: L–2018–LLA–0043), dated March 21, 2019.	ML19084A054.
Submittal of Amendment 1 to NUHOMS EOS Certificate of Compliance No. 1042, Revision 5—Revised Responses to Request for Additional Information, dated June 19, 2019.	ML19176A315 (package).
Application for Amendment 1 to NUHOMS EOS Certificate of Compliance No. 1042, Revision 6—Revised Responses to Request for Additional Information, dated July 16, 2019.	ML19204A228 (package).
E-Mail from G. Mathues/Orano TN to C. Jacobs/NRC re: EOS Amendment 1 CoC Clarifications, dated July 17, 2019.	ML19220A177 (package).
Transmittal Letter Regarding Application for Amendment 1 to NUHOMS EOS Certificate of Compliance No. 1042, Revision 7—Technical Specifications Table 3 Editorial Correction, dated August 29, 2019.	ML19248C254 (package).
Orano USA—Application for Amendment 1 to NUHOMS EOS Certificate of Compliance No. 1042, Revision 8—Appendix 3.9.7 Editorial Correction, dated October 1, 2019.	ML19274B914.
Agreement State Program Policy Statement, dated October 18, 2017	82 FR 48535.
Plain Language in Government Writing, dated June 10, 1998	63 FR 31885.
Storage of Spent Fuel In NRC-Approved Storage Casks at Power Reactor Sites: Final Rule, dated July 18, 1990	55 FR 29181.
List of Approved Spent Fuel Storage Casks: TN Americas LLC, NUHOMS® EOS Dry Spent Fuel Storage System, Certificate of Compliance No. 1042: Direct Final Rule, dated March 24, 2017.	82 FR 14987.
Certificate of Compliance No. 1042, Initial Certificate, Corrected	ML17215A161.

The NRC may post materials related to this document, including public comments, on the Federal Rulemaking website at *https://www.regulations.gov* under Docket ID NRC–2019–0224. The Federal Rulemaking website allows you to receive alerts when changes or additions occur in a docket folder. To subscribe: (1) Navigate to the docket folder (NRC–2019–0224); (2) click the ''Sign up for Email Alerts'' link; and 3) enter your email address and select how frequently you would like to receive emails (daily, weekly, or monthly).

List of Subjects in 10 CFR Part 72

Administrative practice and procedure, Hazardous waste, Indians, Intergovernmental relations, Nuclear energy, Penalties, Radiation protection, Reporting and recordkeeping requirements, Security measures, Spent fuel, Whistleblowing.

For the reasons set out in the preamble and under the authority of the Atomic Energy Act of 1954, as amended; the Energy Reorganization Act of 1974, as amended; the Nuclear Waste Policy Act of 1982, as amended; and 5 U.S.C. 552 and 553; the NRC is adopting the following amendments to 10 CFR part 72:

PART 72—LICENSING REQUIREMENTS FOR THE INDEPENDENT STORAGE OF SPENT NUCLEAR FUEL, HIGH-LEVEL RADIOACTIVE WASTE, AND REACTOR-RELATED GREATER THAN CLASS C WASTE

■ 1. The authority citation for part 72 continues to read as follows:

Authority: Atomic Energy Act of 1954, secs. 51, 53, 57, 62, 63, 65, 69, 81, 161, 182, 183, 184, 186, 187, 189, 223, 234, 274 (42 U.S.C. 2071, 2073, 2077, 2092, 2093, 2095, 2099, 2111, 2201, 2210e, 2232, 2233, 2234, 2236, 2237, 2238, 2273, 2282, 2021); Energy Reorganization Act of 1974, secs. 201, 202, 206, 211 (42 U.S.C. 5841, 5842, 5846, 5851); National Environmental Policy Act of 1969 (42 U.S.C. 4332); Nuclear Waste Policy Act of 1982, secs. 117(a), 132, 133, 134, 135, 137, 141, 145(g), 148, 218(a) (42 U.S.C. 10137(a), 10152, 10153, 10154, 10155, 10157, 10161, 10165(g), 10168, 10198(a)); 44 U.S.C. 3504 note.

■ 2. In § 72.214, revise Certificate of Compliance No. 1042 to read as follows:

§ 72.214 List of approved spent fuel storage casks.

* * * * *

Certificate Number: 1042.

Initial Certificate Effective Date: June 7, 2017.

Amendment Number 1 Effective Date: June 17, 2020.

SAR Submitted by: TN Americas LLC.

SAR Title: Final Safety Analysis Report for the NUHOMS® EOS Dry Spent Fuel Storage System.

Docket Number: 72–1042.

Certificate Expiration Date: June 7, 2037.

Model Number: EOS–37PTH, EOS–89BTH.

Dated at Rockville, Maryland, this 18th day of March, 2020.

For the Nuclear Regulatory Commission.

Margaret M. Doane,

Executive Director for Operations.

[FR Doc. 2020–06662 Filed 4–2–20; 8:45 am]

BILLING CODE 7590–01–P

DEPARTMENT OF TRANSPORTATION

Federal Aviation Administration

14 CFR Part 39

[Docket No. FAA–2019–0605; Product Identifier 2019–NM–093–AD; Amendment 39–19852; AD 2020–04–15]

RIN 2120–AA64

Airworthiness Directives; The Boeing Company Airplanes

AGENCY: Federal Aviation Administration (FAA), DOT.

ACTION: Final rule.

SUMMARY: The FAA is adopting a new airworthiness directive (AD) for all The Boeing Company Model 757 airplanes and Model 767–200, –300, and –300F series airplanes. This AD was prompted by reports of excessively high flight deck or cabin temperatures. This AD requires revising certificate limitations and operating procedures of the existing airplane flight manual (AFM), to provide the flightcrew with procedures for hot flight deck or cabin temperatures to follow under certain conditions. The FAA is issuing this AD to address the unsafe condition on these products.

DATES: This AD is effective May 8, 2020.

ADDRESSES:

Examining the AD Docket

You may examine the AD docket on the internet at *https://www.regulations.gov* by searching for and locating Docket No. FAA–2019–0605; or in person at Docket Operations between 9 a.m. and 5 p.m., Monday through Friday, except Federal holidays. The AD docket contains this final rule, the regulatory evaluation, any comments received, and other information. The address for Docket Operations (phone: 800–647–5527) is U.S. Department of Transportation, Docket Operations, M–30, West Building Ground Floor, Room W12–140, 1200 New Jersey Avenue SE, Washington, DC 20590.

FOR FURTHER INFORMATION CONTACT: Susan L. Monroe, Aerospace Engineer, Cabin Safety and Environmental Systems Section, FAA, Seattle ACO Branch, 2200 South 216th St., Des Moines, WA 98198; phone and fax: 206–231–3570; email: *susan.l.monroe@faa.gov.*

SUPPLEMENTARY INFORMATION:

Discussion

The FAA issued a notice of proposed rulemaking (NPRM) to amend 14 CFR part 39 by adding an AD that would apply to all The Boeing Company Model 757 airplanes and Model 767–200, –300, and –300F series airplanes. The NPRM published in the **Federal Register** on August 20, 2019 (84 FR 43080). The NPRM was prompted by reports of excessively high flight deck or cabin temperatures. The NPRM proposed to require revising certificate limitations and operating procedures of the existing AFM to provide the flightcrew with procedures for hot flight deck or cabin temperatures to follow under certain conditions.

The FAA is issuing this AD to address excessively high flight deck or cabin temperatures, which may inhibit safe operation of the airplane by the flightcrew and contribute to loss of continued safe flight and landing, or may cause physiological distress to passengers and cabin crew.

Comments

The FAA gave the public the opportunity to participate in developing this final rule. The following presents the comments received on the NPRM and the FAA's response to each comment.

Support for the NPRM

The Air Line Pilots Association, International (ALPA), expressed support for the NPRM.

Effect of Winglets on Accomplishment of the Proposed Actions

Aviation Partners Boeing stated that the installation of winglets per Supplemental Type Certificate (STC) ST01518SE or STC ST01920SE does not affect the accomplishment of the manufacturer's service instructions.

The FAA agrees with the commenter that neither STC ST01518SE nor STC ST01920SE affect the accomplishment of the manufacturer's service instructions. Therefore, the installation of STC ST01518SE or STC ST01920SE does not affect the ability to accomplish the actions required by this AD. The AD has not been changed in this regard.

Request To Correct a Checklist Step

Boeing requested to remove ''100%'' from the non-normal checklist step for Oxygen Masks and Regulators. The commenter noted that the 100% oxygen specified in the operating procedures is not correct for this particular situation on the airplane. According to Boeing, the flightcrew should be using the normal diluter demand mask regulator position, which is described in the non-normal checklist introduction in the Quick Reference Handbook part of the Flight Crew Operations Manual.

The FAA agrees with Boeing's assessment and request. The ''100%'' indication has been removed from the non-normal checklist step for Oxygen Masks and Regulators in figures 4, 5, 6, and 7 to paragraph (g)(2) of this AD.

Request To Not Require New Certificate Limitation

American Airlines and United Airlines requested to remove the proposed requirement to revise the existing AFM certificate limitation chapter with a new certificate limitation. American Airlines also requested that if the requirement is not removed, figure 3 to paragraph (g)(1) of this AD be revised to specify the ''Quick Reference Handbook,'' rather than the ''Operating Procedures chapter of this manual.'' The commenters asserted that the Cabin Temperature Hot procedures currently exist in other reference material, and that operators will continue to follow those procedures. United Airlines further asserted that no precedent exists for adding a certificate limitation directing the accomplishment of an emergency or non-normal checklist.

The FAA does not agree to this request because the revision of the certificate limitation chapter makes the Cabin Temperature Hot procedures mandatory. The revised certificate limitation chapter also provides awareness to operators and flight standards that the actions are related to an unsafe condition and cannot be modified. As to the additional request to specify the ''Quick Reference Handbook,'' that publication cannot be specified because it is not controlled nor approved by the FAA. This requirement has not been changed in this AD.

Request Concerning a Planned Technical Solution

Lufthansa Technik (Lufthansa) asked whether a preventive technical solution, rather than the proposed reactive one, would be provided and mandated for the unsafe condition. The commenter said a technical solution such as a modification would prevent operators from getting into the situation that creates the unsafe condition.

The FAA agrees that a preventive technical solution to the unsafe condition would be a better option. Although no technical solution has yet been provided or proposed by Boeing, the corrective action required by this AD provides an adequate level of safety. Should we receive a technical solution from Boeing, the FAA may consider further rulemaking. The AD has not been changed with regard to this request.

Conclusion

The FAA reviewed the relevant data, considered the comments received, and determined that air safety and the public interest require adopting this final rule with the changes described previously and minor editorial changes. The FAA has determined that these minor changes:

- Are consistent with the intent that was proposed in the NPRM for addressing the unsafe condition; and
- Do not add any additional burden upon the public than was already proposed in the NPRM.

The FAA also determined that these changes will not increase the economic burden on any operator or increase the scope of this final rule.

Costs of Compliance

The FAA estimates that this AD affects 866 airplanes of U.S. registry. The FAA estimates the following costs to comply with this AD:

ESTIMATED COSTS

Action	Labor cost	Parts cost	Cost per product	Cost on U.S. operators
AFM Revision	1 work-hour × $85 per hour = $85	$0	$85	$73,610

Authority for This Rulemaking

Title 49 of the United States Code specifies the FAA's authority to issue rules on aviation safety. Subtitle I, section 106, describes the authority of the FAA Administrator. Subtitle VII: Aviation Programs, describes in more detail the scope of the Agency's authority.

The FAA is issuing this rulemaking under the authority described in Subtitle VII, Part A, Subpart III, Section 44701: ''General requirements.'' Under that section, Congress charges the FAA with promoting safe flight of civil aircraft in air commerce by prescribing regulations for practices, methods, and procedures the Administrator finds necessary for safety in air commerce. This regulation is within the scope of that authority because it addresses an unsafe condition that is likely to exist or develop on products identified in this rulemaking action.

Regulatory Findings

This AD will not have federalism implications under Executive Order 13132. This AD will not have a substantial direct effect on the States, on the relationship between the national government and the States, or on the distribution of power and responsibilities among the various levels of government.

For the reasons discussed above, I certify that this AD:

(1) Is not a ''significant regulatory action'' under Executive Order 12866,

(2) Will not affect intrastate aviation in Alaska, and

(3) Will not have a significant economic impact, positive or negative, on a substantial number of small entities under the criteria of the Regulatory Flexibility Act.

List of Subjects in 14 CFR Part 39

Air transportation, Aircraft, Aviation safety, Incorporation by reference, Safety.

Adoption of the Amendment

Accordingly, under the authority delegated to me by the Administrator, the FAA amends 14 CFR part 39 as follows:

PART 39—AIRWORTHINESS DIRECTIVES

■ 1. The authority citation for part 39 continues to read as follows:

Authority: 49 U.S.C. 106(g), 40113, 44701.

§ 39.13 [Amended]

■ 2. The FAA amends § 39.13 by adding the following new airworthiness directive (AD):

2020–04–15 The Boeing Company: Amendment 39–19852 ; Docket No. FAA–2019–0605; Product Identifier 2019–NM–093–AD.

(a) Effective Date

This AD is effective May 8, 2020.

(b) Affected ADs

None.

(c) Applicability

This AD applies to all The Boeing Company airplanes specified in paragraphs (c)(1) and (2) of this AD, certificated in any category.

(1) Model 757–200, –200PF, –200CB, and –300 series airplanes.

(2) Model 767–200, –300, and –300F series airplanes.

(d) Subject

Air Transport Association (ATA) of America Code 21, Air conditioning.

(e) Unsafe Condition

This AD was prompted by reports of excessively high flight deck or cabin temperatures. The FAA is issuing this AD to address this condition, which may inhibit safe operation of the airplane by the flightcrew and contribute to loss of continued safe flight and landing, or may cause physiological distress to passengers and cabin crew.

(f) Compliance

Comply with this AD within the compliance times specified, unless already done.

(g) Airplane Flight Manual (AFM) Revisions

Within 60 days after the effective date of this AD, do the actions specified in paragraphs (g)(1) and (2) of this AD.

(1) Revise the ''Certificate Limitations'' chapter of the existing AFM to include the information specified in figure 1 to paragraph (g)(1), figure 2 to paragraph (g)(1), or figure 3 to paragraph (g)(1) of this AD, as applicable. This may be accomplished by inserting a copy of this AD into the existing AFM. When information identical to that in figure 1 to paragraph (g)(1), figure 2 to paragraph (g)(1), or figure 3 to paragraph (g)(1) of this AD has been included in the ''Certificate Limitations'' chapter of the general revisions of the existing AFM, the general revisions may be inserted into the existing AFM, and the copy of this AD may be removed from the existing AFM.

Figure 1 to paragraph (g)(1) – *Model 757 Freighter Airplanes Certificate Limitation*

Required by AD 2020-04-15
In the event of excessively hot flight deck temperature, the flight crew must comply with the Cabin Temperature Hot Procedures in the Operating Procedures chapter of this manual.

Figure 2 to paragraph (g)(1) – *Model 767 Freighter Airplanes Certificate Limitation*

Required by AD 2020-04-15
In the event of excessively hot flight deck or main deck cargo compartment temperature, the flight crew must comply with the Cabin Temperature Hot Procedures in the Operating Procedures chapter of this manual.

Figure 3 to paragraph (g)(1) – *Model 757 and 767 Passenger Airplanes Certificate Limitation*

Required by AD 2020-04-15
In the event of excessively hot flight deck or passenger cabin temperature, the flight crew must comply with the Cabin Temperature Hot Procedures in the Operating Procedures chapter of this manual.

(2) Revise the ''Operating Procedures'' chapter of the existing AFM to include the information specified in figure 4 to paragraph (g)(2), figure 5 to paragraph (g)(2), figure 6 to paragraph (g)(2), or figure 7 to paragraph (g)(2) of this AD, as applicable. This may be accomplished by inserting a copy of this AD into the existing AFM. When information identical to that in figure 4 to paragraph (g)(2), figure 5 to paragraph (g)(2), figure 6 to paragraph (g)(2), or figure 7 to paragraph (g)(2) of this AD has been included in the ''Operating Procedures'' chapter of the general revisions of the existing AFM, the general revisions may be inserted into the existing AFM, and the copy of this AD may be removed from the existing AFM.

Figure 4 to paragraph (g)(2) – *Model 757 Freighter Operating Procedures*

Required by AD 2020-04-15

AFM Cabin Temperature Hot Procedures

757 Freighter

```
If flight deck temperature is excessively hot and could cause
incapacitation:

     Trim Air Switch ..............................................OFF

     If outlet air stays excessively hot after one minute:
          Trim Air Switch .........................................ON
          Pack Control Selectors (Both) .......................STBY-N

     If outlet air stays excessively hot after one minute:
          Left Pack Control Selector ..............................OFF

     If outlet air stays excessively hot after one minute:
          Left Pack Control Selector ............................AUTO
          Right Pack Control Selector .............................OFF

     If outlet air stays excessively hot after one minute, descend to
     10,000 ft. or minimum safe altitude, whichever is higher.
          Reduce heat sources:
               Utility Bus Switches (Both) .......................OFF
               Shoulder Heaters and Foot Heaters (All) ...........OFF

     When at level off, maintain 290 knots or greater.
          If level off above 10,000 ft.:
               Oxygen Masks and Regulators .......................ON
               Crew Communications ......................ESTABLISH

     Left Pack Control Selector ...................................OFF

     Manually depressurize and open outflow valve.
```

Figure 5 to paragraph (g)(2) – *Model 757 Passenger Operating Procedures*

Required by AD 2020-04-15

AFM Cabin Temperature Hot Procedures

757 Passenger

```
If flight deck or passenger cabin temperature is excessively hot and could
cause incapacitation:

     Trim Air Switch ..............................................OFF

     If outlet air stays excessively hot after one minute:
          Trim Air Switch .........................................ON
          Pack Control Selectors (Both) ........................STBY-N

     If outlet air stays excessively hot after one minute:
          Left Pack Control Selector ..............................OFF

     If outlet air stays excessively hot after one minute:
          Left Pack Control Selector ............................AUTO
          Right Pack Control Selector .............................OFF
     If outlet air stays excessively hot after one minute, descend to
     10,000 ft. or minimum safe altitude, whichever is higher.
          Reduce heat sources:
               Utility Bus Switches (Both) ......................OFF
               Shoulder Heaters and Foot Heaters (All) ...........OFF

     When at level off, maintain 290 knots or greater.
          If level off above 10,000 ft.:
               Oxygen Masks and Regulators ......................ON
               Crew Communications ........................ESTABLISH

     Left Pack Control Selector ...................................OFF

     Manually depressurize and open outflow valve.
```

Figure 6 to paragraph (g)(2) – *Model 767 Freighter Operating Procedures*

Required by AD 2020-04-15

AFM Cabin Temperature Hot Procedures

767 Freighter

```
If flight deck or main deck cargo compartment temperature is excessively
hot and could cause incapacitation:

     Trim Air Switch ..............................................OFF

     If outlet air stays excessively hot after one minute:
          Trim Air Switch .........................................ON
          Pack Control Selectors (Both) ......................... STBY-N

     If outlet air stays excessively hot after one minute:
          Left Pack Control Selector ............................OFF

     If outlet air stays excessively hot after one minute:
          Left Pack Control Selector ........................... AUTO
          Right Pack Control Selector ...........................OFF
     If outlet air stays excessively hot after one minute, descend to
     10,000 ft. or minimum safe altitude, whichever is higher.
          Reduce heat sources:
               Utility Bus Switches (Both) ......................OFF
               Shoulder Heaters and Foot Heaters (All) ..........OFF

     When at level off, maintain 290 knots or less.
          If level off above 10,000 ft.:
               Oxygen Masks and Regulators ......................ON
               Crew Communications ........................ ESTABLISH

     Left Pack Control Selector ...................................OFF

     Manually depressurize and open outflow valve.
```

Figure 7 to paragraph (g)(2) – *Model 767 Passenger Operating Procedures*

Required by AD 2020-04-15

AFM Cabin Temperature Hot Procedures

767 Passenger

```
If flight deck or passenger cabin temperature is excessively hot and could
cause incapacitation:

     Trim Air Switch ..............................................OFF

     If outlet air stays excessively hot after one minute:
          Trim Air Switch .........................................ON
          Pack Control Selectors (Both) .......................STBY-N

     If outlet air stays excessively hot after one minute:
          Left Pack Control Selector ..............................OFF

     If outlet air stays excessively hot after one minute:
          Left Pack Control Selector ............................AUTO
          Right Pack Control Selector .............................OFF

     If outlet air stays excessively hot after one minute, descend to
     10,000 ft. or minimum safe altitude, whichever is higher.
          Reduce heat sources:
               Shoulder Heaters and Foot Heaters (All) ...........OFF
               Select galley equipment, IFE and main cabin door heaters
               off.

     When at level off, maintain 290 knots or less.
          If level off above 10,000 ft.:
               Oxygen Masks and Regulators .......................ON
               Crew Communications ........................ESTABLISH

     Left Pack Control Selector ..................................OFF

     Manually depressurize and open outflow valve.
```

(h) Alternative Methods of Compliance (AMOCs)

(1) The Manager, Seattle ACO Branch, FAA, has the authority to approve AMOCs for this AD, if requested using the procedures found in 14 CFR 39.19. In accordance with 14 CFR 39.19, send your request to your principal inspector or local Flight Standards District Office, as appropriate. If sending information directly to the manager of the certification office, send it to the attention of the person identified in paragraph (i) of this AD. Information may be emailed to: *9-ANM-Seattle-ACO-AMOC-Requests@faa.gov*.

(2) Before using any approved AMOC, notify your appropriate principal inspector, or lacking a principal inspector, the manager of the local flight standards district office/certificate holding district office.

(3) An AMOC that provides an acceptable level of safety may be used for any repair, modification, or alteration required by this AD if it is approved by The Boeing Company Organization Designation Authorization (ODA) that has been authorized by the Manager, Seattle ACO Branch, FAA, to make those findings. To be approved, the repair method, modification deviation, or alteration deviation must meet the certification basis of the airplane, and the approval must specifically refer to this AD.

(i) Related Information

For more information about this AD, contact Susan L. Monroe, Aerospace Engineer, Cabin Safety and Environmental Systems Section, FAA, Seattle ACO Branch, 2200 South 216th St., Des Moines, WA 98198; phone and fax: 206–231–3570; email: *susan.l.monroe@faa.gov*.

(j) Material Incorporated by Reference

None.

Issued on March 24, 2020.

Gaetano A. Sciortino,

Deputy Director for Strategic Initiatives, Compliance & Airworthiness Division, Aircraft Certification Service.

[FR Doc. 2020–06923 Filed 4–2–20; 8:45 am]

BILLING CODE 4910–13–P

DEPARTMENT OF TRANSPORTATION

Federal Aviation Administration

14 CFR Part 71

[Docket No. FAA–2020–0305; Airspace Docket No. 20–ASO–12]

RIN 2120–AA66

Amendment of Jet Route J–37 in the Vicinity of Atlanta, GA

AGENCY: Federal Aviation Administration (FAA), DOT.

ACTION: Final rule.

SUMMARY: This action amends Jet Route J–37 in the vicinity of Atlanta, GA, by removing the route segment between the Montgomery, AL, VHF Omnidirectional Range (VOR)/Tactical Air Navigation (VORTAC) and the Lynchburg, VA, VOR/Distance Measuring Equipment (VOR/DME) navigation aids. The route segment was recently removed from the jet route effective January 30, 2020, and then inadvertently added back to the jet route the following chart cycle, effective March 26, 2020. Subsequent to the publication of the rule that added the route segment back to J–37, the FAA identified the error and is taking this action to correct it by removing the route segment as it was in January 2020 in support of the Northeast Corridor Atlantic Coast Route Project.

DATES: Effective date 0901 UTC, May 21, 2020. The Director of the Federal Register approves this incorporation by reference action under Title 1 Code of Federal Regulations part 51, subject to the annual revision of FAA Order 7400.11 and publication of conforming amendments.

ADDRESSES: FAA Order 7400.11D, Airspace Designations and Reporting Points, and subsequent amendments can be viewed online at *https://www.faa.gov/air_traffic/publications/.* For further information, you can contact the Rules and Regulations Group, Federal Aviation Administration, 800 Independence Avenue SW, Washington, DC 20591; telephone: (202) 267–8783. The Order is also available for inspection at the National Archives and Records Administration (NARA). For information on the availability of FAA Order 7400.11D at NARA, email *fedreg.legal@nara.gov* or go to *https://www.archives.gov/federal-register/cfr/ibr-locations.html.*

FOR FURTHER INFORMATION CONTACT: Colby Abbott, Rules and Regulations Group, Office of Policy, Federal Aviation Administration, 800 Independence Avenue SW, Washington, DC 20591; telephone: (202) 267–8783.

SUPPLEMENTARY INFORMATION:

Authority for This Rulemaking

The FAA's authority to issue rules regarding aviation safety is found in Title 49 of the United States Code. Subtitle I, Section 106 describes the authority of the FAA Administrator. Subtitle VII, Aviation Programs, describes in more detail the scope of the agency's authority. This rulemaking is promulgated under the authority described in Subtitle VII, Part A, Subpart I, Section 40103. Under that section, the FAA is charged with prescribing regulations to assign the use of the airspace necessary to ensure the safety of aircraft and the efficient use of airspace. This regulation is within the scope of that authority as it modifies the route structure in the National Airspace System as necessary to preserve the safe and efficient flow of air traffic.

History

In 2018, the FAA published a notice of proposed rulemaking (NPRM) in the **Federal Register** for Docket No. FAA–2018–0817 (83 FR 48730; September 27, 2018) to amend 3 jet routes, 2 RNAV Q-routes, and 8 VOR Federal airways, and establish 4 RNAV T-routes due to the planned decommissioning of the Hobby, TX, VOR/DME. That action supported the FAA's VOR Minimum Operational Network (VOR MON) Program as published in the final policy statement notice, ''Provision of Navigation Services for the Next Generation Air Transportation System (NextGen) Transition to Performance-Based Navigation (PBN) (Plan for Establishing a VOR Minimum Operational Network),'' published in the **Federal Register** of July 26, 2016 (81 FR 48694), Docket No. FAA–2011–1082. One of the three jet routes proposed for amendment in that docket action was J–37, which included retaining the route segment between the Montgomery, AL, VORTAC and the Lynchburg, VA, VOR/DME as it was charted at that time.

Subsequent to the Docket No. FAA–2018–0817 NPRM publishing in the **Federal Register**, the FAA published a separate NPRM in the **Federal Register** for Docket No. FAA–2019–0638 (84 FR 48086; September 12, 2019) and a final rule in the **Federal Register** for Docket No. FAA–2019–0638 (84 FR 66066, December 3, 2019) to amend or remove certain air traffic service (ATS) routes in the southeastern United States. That action supported the FAA's Northeast Corridor Atlantic Coast Route Project to improve the efficiency of the National Airspace System (NAS) and reduce dependency on ground-based navigational systems. One of the ATS routes amended by that docket action was also J–37, which removed the route segment between the Montgomery, AL, VORTAC and Lynchburg, VA, VOR/DME. The effective date of the final rule for that docket action was January 30, 2020.

Then, subsequent to the Docket No. FAA–2019–0638 final rule publishing in the **Federal Register**, the FAA published a final rule in the **Federal Register** for Docket No. FAA–2018–0817 (85 FR 3814; January 23, 2020). That rule amended and established multiple ATS routes, including J–37, affected by the planned decommissioning of the Hobby, TX, VOR/DME as the docket action had proposed in 2018. The effective date of the final rule for that docket action was March 26, 2020.

As a result, J–37 was amended by a rule (Docket No. FAA–2019–0638) published in the **Federal Register** in December 2019 and effective January 30, 2020, removing the route segment between the Montgomery, AL, VORTAC and Lynchburg, VA, VOR/DME. Then, J–37 was amended again by a rule (Docket No. FAA–2018–0817) published in the **Federal Register** in January 2020 and effective March 26, 2020, inadvertently adding the same route segment back into the jet route the following chart cycle.

The FAA is taking this action now to amend the Part 71 description of J–37 by removing the route segment between the Montgomery, AL, VORTAC and Lynchburg, VA, VOR/DME as it was in January 2020 in support of the Northeast Corridor Atlantic Coast Route Project.

Jet Routes are published in paragraph 2004 of FAA Order 7400.11D, dated August 8, 2019, and effective September 15, 2019, which is incorporated by reference in 14 CFR 71.1. The Jet Route listed in this rule will be subsequently published in the Order.

FAA Order 7400.11, Airspace Designations and Reporting Points, is published yearly and effective on September 15.

Availability and Summary of Documents for Incorporation by Reference

This document amends FAA Order 7400.11D, Airspace Designations and Reporting Points, dated August 8, 2019, and effective September 15, 2019. FAA Order 7400.11D is publicly available as listed in the **ADDRESSES** section of this document. FAA Order 7400.11D lists Class A, B, C, D, and E airspace areas, air traffic service routes, and reporting points.

The Rule

This action amends Title 14 Code of Federal Regulations (14 CFR) part 71 by modifying Jet Route J–37 to remove the route segment between the Montgomery, AL, VORTAC and the Lynchburg, VA, VOR/DME. This action corrects the inadvertent inclusion of the route segment published in the Docket No. FAA–2018–0817 final rule, after the route segment was removed in the Docket No. FAA–2019–0638 final rule. Because the error described above requires prompt resolution, notice and public procedures under 5 U.S.C. 553(b) are unnecessary.

The Jet Route modification accomplished by this action is outlined below.

J–37: J–37 extends between the Harvey, LA, VORTAC and the Coyle, NJ, VORTAC; and between the Kennedy, NY, VOR/DME, and the Massena, NY, VORTAC. The route segment between the Montgomery, AL, VORTAC and the Lynchburg, VA, VOR/DME is removed. The unaffected portions of the existing route remain as charted.

The radials listed in the route description below are stated in True degrees.

Regulatory Notices and Analyses

The FAA has determined that this regulation only involves an established body of technical regulations for which frequent and routine amendments are necessary to keep them operationally current. It, therefore: (1) Is not a ''significant regulatory action'' under Executive Order 12866; (2) is not a ''significant rule'' under Department of Transportation (DOT) Regulatory Policies and Procedures (44 FR 11034; February 26, 1979); and (3) does not warrant preparation of a regulatory evaluation as the anticipated impact is so minimal. Since this is a routine matter that only affects air traffic procedures and air navigation, it is certified that this rule, when promulgated, does not have a significant economic impact on a substantial number of small entities under the criteria of the Regulatory Flexibility Act.

Environmental Review

The FAA has determined that this action of modifying Jet Route J–37 near Atlanta, GA, qualifies for categorical exclusion under the National Environmental Policy Act and its implementing regulations at 40 CFR part 1500, and in accordance with FAA Order 1050.1F, Environmental Impacts: Policies and Procedures, Paragraph 5–6.5a, which categorically excludes from further environmental impact review rulemaking actions that designate or modify classes of airspace areas, airways, routes, and reporting points (see 14 CFR part 71, Designation of Class A, B, C, D, and E Airspace Areas; Air Traffic Service Routes; and Reporting Points). As such, this action is not expected to result in any potentially significant environmental impacts. In accordance with FAA Order 1050.1F, paragraph 5–2 regarding Extraordinary Circumstances, the FAA has reviewed this action for factors and circumstances in which a normally categorically excluded action may have a significant environmental impact requiring further analysis. The FAA has determined no extraordinary circumstances exist that warrant preparation of an environmental assessment or environmental impact study.

List of Subjects in 14 CFR Part 71

Airspace, Incorporation by reference, Navigation (air).

The Amendment

In consideration of the foregoing, the Federal Aviation Administration amends 14 CFR part 71 as follows:

PART 71—DESIGNATION OF CLASS A, B, C, D, AND E AIRSPACE AREAS; AIR TRAFFIC SERVICE ROUTES; AND REPORTING POINTS

■ 1. The authority citation for part 71 continues to read as follows:

Authority: 49 U.S.C. 106(g), 40103, 40113, 40120; E.O. 10854, 24 FR 9565, 3 CFR, 1959–1963 Comp., p. 389.

§ 71.1 [Amended]

■ 2. The incorporation by reference in 14 CFR 71.1 of FAA Order 7400.11D, Airspace Designations and Reporting Points, dated August 8, 2019, and effective September 15, 2019, is amended as follows:

Paragraph 2004 Jet Routes.

* * * * *

J–37 [Amended]

From Harvey, LA; Semmes, AL; to Montgomery, AL. From Lynchburg, VA; Gordonsville, VA; Brooke, VA; INT Brooke 067° and Coyle, NJ, 226° radials; to Coyle. From Kennedy, NY; Kingston, NY; Albany, NY; to Massena, NY.

* * * * *

Issued in Washington, DC, on March 30, 2020.

Scott M. Rosenbloom,

Acting Manager, Rules and Regulations Group.

[FR Doc. 2020–06909 Filed 4–2–20; 8:45 am]

BILLING CODE 4910–13–P

DEPARTMENT OF TRANSPORTATION

Federal Aviation Administration

14 CFR Part 71

[Docket No. FAA–2019–0786; Airspace Docket No. 18–AWP–1]

RIN 2120–AA66

Amendment of Class E Airspace and Establishment of Class E Airspace Extension; Battle Mountain, NV

AGENCY: Federal Aviation Administration (FAA), DOT.

ACTION: Final rule.

SUMMARY: This action amends the Class E surface area, Class E airspace extending upward from 700 feet above the surface and creates Class E airspace as an extension to the Class E surface area at Battle Mountain Airport, Battle Mountain, NV. After establishment of a new area navigation (RNAV) procedure and review of the airspace, the FAA found it necessary to amend the existing airspace and establish new controlled airspace for the safety and management of Instrument Flight Rules (IFR) operations at this airport. This action also removes a reference to the Battle Mountain VORTAC from the legal description for the Class E airspace extending upward from 700 feet.

DATES: Effective 0901 UTC, July 16, 2020. The Director of the Federal Register approves this incorporation by reference action under Title 1 Code of Federal Regulations part 51, subject to the annual revision of FAA Order 7400.11 and publication of conforming amendments.

ADDRESSES: FAA Order 7400.11D, Airspace Designations and Reporting Points, and subsequent amendments can be viewed online at *https://www.faa.gov//air_traffic/publications/.* For further information, you can contact the Airspace Policy Group, Federal Aviation Administration, 800 Independence Avenue SW, Washington, DC 20591; telephone: (202) 267–8783. The Order is also available for inspection at the National Archives and Records Administration (NARA). For information on the availability of FAA Order 7400.11D at NARA, email *fedreg.legal@nara.gov* or go to *https://www.archives.gov/federal-register/cfr/ibr-locations.html.*

FOR FURTHER INFORMATION CONTACT: Richard Roberts, Federal Aviation Administration, Western Service Center, Operations Support Group, 2200 S. 216th Street, Des Moines, WA 98198; telephone (206) 231–2245.

SUPPLEMENTARY INFORMATION:

Authority for This Rulemaking

The FAA's authority to issue rules regarding aviation safety is found in Title 49 of the United States Code. Subtitle I, Section 106 describes the authority of the FAA Administrator. Subtitle VII, Aviation Programs, describes in more detail the scope of the agency's authority. This rulemaking is promulgated under the authority described in Subtitle VII, Part A, Subpart I, Section 40103. Under that section, the FAA is charged with prescribing regulations to assign the use of airspace necessary to ensure the safety of aircraft and the efficient use of airspace. This regulation is within the scope of that authority as it will amend the existing Class E airspace and establish new Class E airspace as an extension to the Class E surface area at Battle Mountain Airport, Battle Mountain, NV, in support of IFR operations at the airport.

History

The FAA published a notice of proposed rulemaking in the **Federal Register** (84 FR 65714; November 29, 2019) for Docket No. FAA–2019–0786 to amend and establish Class E airspace at Battle Mountain Airport, Battle Mountain, NV. Interested parties were invited to participate in this rulemaking effort by submitting written comments on the proposal to the FAA. No comments were received.

Class E airspace designations are published in paragraph 6002, 6004 and 6005 of FAA Order 7400.11D, dated August 8, 2019 and effective September 15, 2019, which is incorporated by reference in 14 CFR 71.1. The Class E airspace designation listed in this document will be published subsequently in the Order.

Availability and Summary of Documents for Incorporation by Reference

This document amends FAA Order 7400.11D, Airspace Designations and Reporting Points, dated August 8, 2019, and effective September 15, 2019. FAA Order 7400.11D is publicly available as listed in the **ADDRESSES** section of this document. FAA Order 7400.11D lists Class A, B, C, D, and E airspace areas, air traffic service routes, and reporting points.

The Rule

This amendment to Title 14 Code of Federal Regulations (14 CFR) part 71 modifies Class E airspace at Battle Mountain Airport, Battle Mountain, NV. The Class E surface area will be adjusted to that area within 4.2 miles of the airport. The surface area that extends 1 mile both sides of the 218° bearing from the 4.2 mile radius to 7.4 miles southwest of the airport will be eliminated.

A Class E extension to the surface area will be established within 1.3 miles each side of the 228° bearing, which will provide the required airspace to protect aircraft descending through 1000 feet AGL, while using the VOR approach to runway 4.

The Class E airspace extending upward from 700 feet AGL will be modified by establishing airspace 2 miles on each side of the 48° bearing from the airport to 11 miles northeast, to contain a new RNAV approach to runway 22. To the west, the airspace extending upward from 700 feet AGL is expanded from the current 4.2 mile radius to 7 miles from the airport, between the 265° bearing clockwise to the 32° bearing, to protect departures until they reach 1200 feet AGL. This action also modifies the lateral boundaries of the Class E airspace extending upward from 700 feet AGL to the southwest from 25 miles of the Battle Mountain VORTAC to within a 16.5 mile radius of the airport from the 204° bearing clockwise to the 266° bearing. This will protect the VOR Approach to runway 4, as aircraft descend through 1500 feet.

This action eliminates the Battle Mountain VORTAC as a reference point in the legal description, as it is no longer required.

This airspace supports IFR operations at Battle Mountain Airport, Battle Mountain, NV.

Class E airspace designations are published in paragraph 6002, 6004 and 6005 of FAA Order 7400.11D, dated August 8, 2019 and effective September 15, 2019, which is incorporated by reference in 14 CFR 71.1. The Class E airspace designation listed in this document will be published subsequently in the Order. FAA Order 7400.11, Airspace Designations and Reporting Points, is published yearly and effective on September 15.

Regulatory Notices and Analyses

The FAA has determined that this regulation only involves an established body of technical regulations for which frequent and routine amendments are necessary to keep them operationally current, is non-controversial and unlikely to result in adverse or negative comments. It, therefore: (1) Is not a ''significant regulatory action'' under Executive Order 12866; (2) is not a ''significant rule'' under DOT Regulatory Policies and Procedures (44 FR 11034; February 26, 1979); and (3) does not warrant preparation of a regulatory evaluation as the anticipated impact is so minimal. Since this is a routine matter that will only affect air traffic procedures and air navigation, it is certified that this rule, when promulgated, would not have a significant economic impact on a substantial number of small entities under the criteria of the Regulatory Flexibility Act.

Environmental Review

The FAA has determined that this action qualifies for categorical exclusion under the National Environmental Policy Act in accordance with FAA Order 1050.1F, ''Environmental Impacts: Policies and Procedures,'' paragraph 5–6.5a. This airspace action is not expected to cause any potentially significant environmental impacts, and no extraordinary circumstances exist that warrant preparation of an environmental assessment.

List of Subjects in 14 CFR Part 71

Airspace, Incorporation by reference, Navigation (air).

Adoption of the Amendment

In consideration of the foregoing, the Federal Aviation Administration amends 14 CFR part 71 as follows:

PART 71—DESIGNATION OF CLASS A, B, C, D, AND E AIRSPACE AREAS; AIR TRAFFIC SERVICE ROUTES; AND REPORTING POINTS

■ 1. The authority citation for 14 CFR part 71 continues to read as follows:

Authority: 49 U.S.C. 106(f), 106(g), 40103, 40113, 40120; E.O. 10854, 24 FR 9565, 3 CFR, 1959–1963 Comp., p. 389.

§ 71.1 [Amended]

■ 2. The incorporation by reference in 14 CFR 71.1 of FAA Order 7400.11D, Airspace Designations and Reporting Points, dated August 8, 2019, and effective September 15, 2019, is amended as follows:

Paragraph 6002 Class E Airspace Designated as Surface Areas.

* * * * *

AWP NV E2 Battle Mountain, NV [Amended]

Battle Mountain Airport, NV
(Lat. 40°35′57″ N, long. 116°52′28″ W)

That airspace extending upward from the surface to and including 2500 feet MSL within a 4.2-mile radius of Battle Mountain Airport, Battle Mountain, NV. This Class E airspace area is effective during the specific dates and times established in advance by a Notice to Airmen. The effective date and times will thereafter be continuously published in the Chart Supplement.

Paragraph 6004 Class E Airspace Areas Designated as an Extension to a Class D or Class E Surface Area.

* * * * *

AWP NV E4 Battle Mountain, NV [NEW]

Battle Mountain Airport, NV
(Lat. 40°35′57″ N, long. 116°52′28″ W)

That airspace extending upward from the surface within 1.3 miles each side of the 228° bearing from the Battle Mountain Airport extending from the 4.2 mile radius to 7 miles southwest of Battle Mountain Airport, Battle Mountain NV.

Paragraph 6005 Class E Airspace Areas Extending Upward From 700 Feet or More Above the Surface of the Earth.

* * * * *

AWP NV E5 Battle Mountain, NV [Amended]

Battle Mountain Airport, NV
(Lat. 40°35′57″ N, long. 116°52′28″ W)

That airspace extending upward from 700 feet above the surface within 16.5-mile radius of the Battle Mountain Airport beginning at the point where the 205° bearing intersects the 16.5-mile radius thence clockwise to the point where the 266° bearing intersects the 16.5-mile radius thence northeast along the 266° bearing to within 7 miles of the airport, thence clockwise along the 7-mile radius to the point where the 65° bearing intersects the 7-mile radius thence to the point where the 77° bearing intersects the 4.2-mile radius thence clockwise to the point where the 158° bearing intersects the 4.2 mile radius, thence to the point of beginning; and that airspace within 2 miles each side of the 49° bearing extending from the 4.2 mile radius to 10.5 miles from the airport.

Issued in Seattle, Washington, on March 26, 2020.

Shawn M. Kozica,

Group Manager, Western Service Center, Operations Support Group.

[FR Doc. 2020–07031 Filed 4–2–20; 8:45 am]

BILLING CODE 4910–13–P

ENVIRONMENTAL PROTECTION AGENCY

40 CFR Part 52

[EPA–R09–OAR–2019–0528; FRL–10007–00–Region 9]

Air Plan Approval; California; Northern Sierra Air Quality Management District; Reasonably Available Control Technology; Correcting Amendment

AGENCY: Environmental Protection Agency (EPA).

ACTION: Correcting amendment.

SUMMARY: On January 15, 2020, the Environmental Protection Agency (EPA) published in the **Federal Register** a final rule entitled ''Air Plan Approval; California; Northern Sierra Air Quality Management District; Reasonably Available Control Technology.'' That publication inadvertently listed in the regulatory text the wrong document number for a document entitled ''Control Techniques Guidelines for the Oil and Natural Gas Industry.'' This document corrects this error in the regulatory text.

DATES: This document is effective on April 3, 2020.

FOR FURTHER INFORMATION CONTACT: Stanley Tong, Rules Office (Air 3–2), EPA Region IX, 75 Hawthorne St., San Francisco, CA 94105. By phone: (415) 947–4122 or by email at *tong.stanley@epa.gov.*

SUPPLEMENTARY INFORMATION: On January 15, 2020 (85 FR 2313), the EPA published a final rule entitled ''Air Plan Approval; California; Northern Sierra Air Quality Management District; Reasonably Available Control Technology''. This rule approved a revision to the California State Implementation Plan under the Clean Air Act consisting of the Northern Sierra Air Quality Management District's demonstration that its rules satisfied applicable requirements regarding reasonably available control technology. Due to a typographical error, the EPA's final rule published on January 15, 2020, inadvertently listed the wrong document number for a document entitled ''Control Techniques Guidelines for the Oil and Natural Gas Industry,'' which could make it difficult for members of the public to locate the document. The correct document number and title are: EPA–453/B–16–001 Oil and Natural Gas Industry. This action corrects the erroneous document number in Table 1 of 40 CFR 52.222(a)(9)(iv).

The EPA has determined that this action falls under the ''good cause'' exemption in section 553(b)(3)(B) of the Administrative Procedure Act (APA) which, upon finding ''good cause,'' authorizes agencies to dispense with public participation where public notice and comment procedures are impracticable, unnecessary, or contrary to the public interest. Public notice and comment for this action is unnecessary because the underlying rule for which this correcting amendment has been prepared was already subject to a 30-day comment period, and this action is merely correcting a minor typographical error in the rule text. Further, this action is consistent with the purpose and rationale of the final rule, which is corrected herein. Because this action does not change the EPA's analyses or overall actions, no purpose would be served by additional public notice and comment. Consequently, additional public notice and comment are unnecessary.

The EPA also finds that there is good cause under APA section 553(d)(3) for this correction to become effective on the date of publication of this action. Section 553(d)(3) of the APA allows an effective date of less than 30 days after publication ''as otherwise provided by the agency for good cause found and published with the rule.'' 5 U.S.C. 553(d)(3). The purpose of the 30-day waiting period prescribed in APA section 553(d)(3) is to give affected parties a reasonable time to adjust their behavior and prepare before the final rule takes effect. This rule does not create any new regulatory requirements such that affected parties would need time to prepare before the rule takes effect. This action merely corrects a typographical error in a previous rulemaking. For these reasons, the EPA finds good cause under APA section 553(d)(3) for this correction to become effective on the date of publication of this action.

Statutory and Executive Order Reviews

Under Executive Order (E.O.) 12866 (58 FR 51735, October 4, 1993), this action is not a ''significant regulatory action'' and is therefore not subject to review by the Office of Management and Budget. For this reason, this action is also not subject to E.O. 13211, ''Actions Concerning Regulations That Significantly Affect Energy Supply, Distribution, or Use'' (66 FR 28355, May 22, 2001). This action is not an E.O. 13771 (82 FR 9339, February 2, 2017) regulatory action because this action is not significant under E.O. 12866. Because the agency has made a ''good cause'' finding that this action is not subject to notice-and-comment requirements under the Administrative Procedures Act or any other statute as indicated in the **SUPPLEMENTARY INFORMATION** section above, it is not subject to the regulatory flexibility provisions of the Regulatory Flexibility Act (5 U.S.C. 601 *et seq.*), or to sections 202 and 205 of the Unfunded Mandates Reform Act of 1995 (UMRA) (Pub. L. 104–4). In addition, this action does not significantly or uniquely affect small governments or impose a significant intergovernmental mandate, as described in sections 203 and 204 of UMRA. In addition, the SIP is not approved to apply on any Indian reservation land or in any other area where the EPA or an Indian tribe has demonstrated that a tribe has jurisdiction. In those areas of Indian country, the rule does not have tribal implications and will not impose

substantial direct costs on tribal governments or preempt tribal law as specified by E.O. 13175 (65 FR 67249, November 9, 2000). This rule will not have substantial direct effects on the States, on the relationship between the National Government and the States, or on the distribution of power and responsibilities among the various levels of governments, as specified by E.O. 13132 (64 FR 43255, August 10, 1999). This rule also is not subject to E.O. 13045 (62 FR 19885, April 23, 1997), because it is not economically significant. This typographical correction action does not involve technical standards; thus the requirements of section 12(d) of the National Technology Transfer and Advancement Act of 1995 (15 U.S.C. 272 note) do not apply. The rule also does not involve special consideration of environmental justice related issues as required by E.O. 12898 (59 FR 7629, February 16, 1994). In issuing this rule, the EPA has taken the necessary steps to eliminate drafting errors and ambiguity, minimize potential litigation, and provide a clear legal standard for affected conduct, as required by section 3 of E.O. 12988 (61 FR 4729, February 7, 1996). The EPA has complied with E.O. 12630 (53 FR 8859, March 15, 1998) by examining the takings implications of the rule in accordance with the ''Attorney General's Supplemental Guidelines for the Evaluation of Risk and Avoidance of Unanticipated Takings'' issued under the executive order. This rule does not impose an information collection burden under the Paperwork Reduction Act of 1995 (44 U.S.C. 3501 *et seq.*).

The Congressional Review Act (5 U.S.C. 801 *et seq.*), as added by the Small Business Regulatory Enforcement Fairness Act of 1996, generally provides that before a rule may take effect, the agency promulgating the rule must submit a rule report, which includes a copy of the rule, to each House of the Congress and to the Comptroller General of the United States. Section 808 allows the issuing agency to make a rule effective sooner than otherwise provided by the CRA if the agency makes a good cause finding that notice and public procedure is impracticable, unnecessary or contrary to the public interest. This determination must be supported by a brief statement. 5 U.S.C. 808(2). As stated previously, the EPA had made such a good cause finding, including the reasons therefore, and established an effective date April 3, 2020. The EPA will submit a report containing this rule and other required information to the U.S. Senate, the U.S. House of Representatives, and the Comptroller General of the United States prior to publication of the rule in the **Federal Register**. This correction to 40 CFR part 52 for California is not a ''major rule'' as defined by 5 U.S.C. 804(2).

List of Subjects in 40 CFR Part 52

Environmental protection, Air pollution control, Incorporation by reference, Intergovernmental relations, Nitrogen oxides, Ozone, Reporting and recordkeeping requirements, Volatile organic compounds.

Dated: March 21, 2020.

John Busterud,

Regional Administrator, Region IX.

Chapter I, title 40 of the Code of Federal Regulations is amended as follows:

PART 52—APPROVAL AND PROMULGATION OF IMPLEMENTATION PLANS

■ 1. The authority citation for part 52 continues to read as follows:

Authority: 42 U.S.C. 7401 *et seq.*

Subpart F—California

■ 2. In section 52.222(a)(9)(iv), amend the Table titled ''Table-1 To paragraph (a)(9)(iv)—Negative Declarations for the 2008 Ozone NAAQS'' by removing the entry for ''EPA 452/B16–001 Oil and Natural Gas Industry.'' and adding in its place ''EPA–453/B–16–001 Oil and Natural Gas Industry.'', to read as follows:

§ 52.222 Negative declarations.

(a) * * *

(9) * * *

(iv) * * *

TABLE 1 TO PARAGRAPH (a)(9)(iv)—NEGATIVE DECLARATIONS FOR THE 2008 OZONE NAAQS

CTG document No.	Title
* *	* * *
EPA–453/B–16–001.	Oil and Natural Gas Industry.
* *	* * *

* * * * *

[FR Doc. 2020–06353 Filed 4–2–20; 8:45 am]

BILLING CODE 6560–50–P

DEPARTMENT OF COMMERCE

National Oceanic and Atmospheric Administration

50 CFR Part 648

[Docket No.: 200324–0086; RTID 0648–XX040]

Fisheries of the Northeastern United States; Northeast Multispecies Fishery; Adjustment of Georges Bank and Southern New England/Mid-Atlantic Yellowtail Flounder Annual Catch Limits

AGENCY: National Marine Fisheries Service (NMFS), National Oceanic and Atmospheric Administration (NOAA), Commerce.

ACTION: Temporary final rule; adjustment of annual catch limits.

SUMMARY: This action transfers unused quota of Georges Bank and Southern New England/Mid-Atlantic yellowtail flounder from the Atlantic scallop fishery to the Northeast multispecies fishery for the remainder of the 2019 fishing year. This quota transfer is authorized when the scallop fishery is not expected to catch its entire allocations of yellowtail flounder. The quota transfer is intended to provide additional fishing opportunities for groundfish vessels to help achieve the optimum yield for these stocks while ensuring sufficient amounts of yellowtail flounder remain available for the scallop fishery.

DATES: Effective April 2, 2020, through April 30, 2020.

FOR FURTHER INFORMATION CONTACT: Maria Fenton, Fishery Management Specialist, (978) 281–9196.

SUPPLEMENTARY INFORMATION: NMFS is required to estimate the total amount of yellowtail flounder catch from the scallop fishery by January 15 each year. If the scallop fishery is expected to catch less than 90 percent of its Georges Bank (GB) or Southern New England/Mid-Atlantic (SNE/MA) yellowtail flounder sub-annual catch limit (ACL), the Regional Administrator has the authority to reduce the scallop fishery sub-ACL for these stocks to the amount projected to be caught, and increase the groundfish fishery sub-ACL by the same amount. This adjustment is intended to help achieve optimum yield for these stocks, while not threatening an overage of the ACLs for the stocks by the groundfish and scallop fisheries.

Based on the most current available catch data, we project that the scallop fishery will have unused quota in the 2019 fishing year. Using the highest

expected catch, the scallop fishery is projected to catch approximately 1.8 mt of GB yellowtail flounder, or 11 percent of its 2019 fishing year sub-ACL, and approximately 1.9 mt of SNE/MA yellowtail flounder, or 13 percent of its 2019 fishing year sub-ACL. The analysis of the highest expected catch is based on the proportion of estimated yellowtail flounder catch occurring in February and March compared to catch in the remainder of the scallop fishing year. The highest proportion observed (in this case fishing year 2016) over the past 6 years is used to estimate the highest expected catch in fishing year 2019.

Because the scallop fishery is expected to catch less than 90 percent of its allocation of GB and SNE/MA yellowtail flounder, this rule reduces the scallop sub-ACL for both stocks to the upper limit projected to be caught, and increases the groundfish sub-ACLs for these stocks by the same amount, effective April 2, 2020, through April 30, 2020. Using the upper limit of expected yellowtail flounder catch by the scallop fishery minimizes the risk of constraining scallop fishing or an ACL overage by the scallop fishery while still providing additional fishing opportunities for groundfish vessels. To date, the groundfish fishery's utilization of both yellowtail flounder stocks is very low, so the risk of the fishing year 2019 ACL for either stock being exceeded is minimal.

Table 1 summarizes the revisions to the 2019 fishing year sub-ACLs (84 FR 34799; July 19, 2019), and Table 2 shows the revised allocations for the groundfish fishery as allocated between the sectors and common pool based on final sector membership for fishing year 2019.

TABLE 1—GEORGES BANK AND SOUTHERN NEW ENGLAND/MID-ATLANTIC YELLOWTAIL FLOUNDER SUB-ACLS

Stock	Fishery	Initial sub-ACL (mt)	Change (mt)	Revised sub-ACL (mt)	Percent change
GB Yellowtail Flounder	Groundfish	84.6	+15.2	99.8	+18
	Scallop	17.0	−15.2	1.8	−89
SNE/MA Yellowtail Flounder	Groundfish	32.1	+13.1	45.2	+41
	Scallop	15.0	−13.1	1.9	−87

TABLE 2—ALLOCATIONS FOR SECTORS AND THE COMMON POOL

(In pounds)

Sector Name	GB yellowtail flounder		SNE/MA yellowtail flounder	
	Initial	Revised	Initial	Revised
Fixed Gear Sector	1,580	1,864	511	720
Maine Coast Community Sector	3,319	3,915	1,060	1,493
Maine Permit Bank	26	30	23	32
Mooncusser Sector	12	15	125	176
Northeast Fishery Sector (NEFS) 2	3,560	4,199	1,334	1,879
NEFS 4	4,033	4,757	1,600	2,253
NEFS 5	2,381	2,809	14,184	19,973
NEFS 6	5,065	5,975	3,270	4,604
NEFS 7	44,932	53,001	5,591	7,873
NEFS 8	26,671	31,461	6,247	8,797
NEFS 10	2	3	388	546
NEFS 11	3	3	14	19
NEFS 12	1	1	7	10
NEFS 13	64,857	76,506	16,289	22,937
New Hampshire Permit Bank	0	0	0	0
Sustainable Harvest Sector (SHS) 1	1,507	1,777	90	127
SHS 2	4,928	5,813	2,204	3,103
SHS 3	18,372	21,672	3,722	5,241
Common Pool	5,330	6,287	14,093	19,845
Sector Total	181,248	213,800	56,658	79,782
Groundfish Total	186,578	220,087	70,751	99,627

TABLE 3—ALLOCATIONS FOR SECTORS AND THE COMMON POOL

(In metric tons) #

Sector name	GB yellowtail flounder		SNE/MA yellowtail flounder	
	Initial	Revised	Initial	Revised
Fixed Gear Sector	1	1	0	0
Maine Coast Community Sector	2	2	0	1
Maine Permit Bank	0	0	0	0
Mooncusser Sector	0	0	0	0
NEFS 2	2	2	1	1
NEFS 4	2	2	1	1
NEFS 5	1	1	6	9
NEFS 6	2	3	1	2
NEFS 7	20	24	3	4

TABLE 3—ALLOCATIONS FOR SECTORS AND THE COMMON POOL—Continued

(In metric tons) #

Sector name	GB yellowtail flounder		SNE/MA yellowtail flounder	
	Initial	Revised	Initial	Revised
NEFS 8	12	14	3	4
NEFS 10	0	0	0	0
NEFS 11	0	0	0	0
NEFS 12	0	0	0	0
NEFS 13	29	35	7	10
New Hampshire Permit Bank	0	0	0	0
Sustainable Harvest Sector 1	1	1	0	0
Sustainable Harvest Sector 2	2	3	1	1
Sustainable Harvest Sector 3	8	10	2	2
Common Pool	2	3	6	9
Sector Total	82	97	26	36
Groundfish Total	85	100	32	45

Numbers are rounded to the nearest metric ton, but allocations are made in pounds. In some cases, this table shows an allocation of 0 metric tons, but that sector may be allocated a small amount of that stock in pounds.

Classification

The NMFS Assistant Administrator has determined that the management measures implemented in this final rule are necessary for the conservation and management of the Northeast multispecies fishery and consistent with the Magnuson-Stevens Act, and other applicable law.

This action is authorized by 50 CFR part 648 and is exempt from review under Executive Order 12866.

The Assistant Administrator for Fisheries finds good cause pursuant to 5 U.S.C. 553(b)(3)(B) and 553(d)(3) to waive prior notice and opportunity for public comment and the 30-day delay in effectiveness period, respectively. This rule relieves groundfish fishermen from more restrictive ACLs for yellowtail stocks and is intended to help the fishery achieve optimum yield. The earlier this rule is in place, the more time the groundfish fishermen will benefit from the increased fishing opportunities this rule provides. Delaying the effective date would reduce or eliminate the expected benefit to the groundfish fishery and undermines the purpose of the rule to help the fishery achieve optimum yield.

The authority to transfer available yellowtail catch from the scallop fishery to the groundfish fishery was designed to allow timely implementation before the end of the Northeast multispecies fishing year on April 30. Given that scallop fishery bycatch data only recently became available, providing additional time for prior public notice and comment or a 30-day cooling off period before transferring quota for these yellowtail flounder would likely prevent this rule from being in place before the end of the fishing year. Such a delay would eliminate any potential benefit to the groundfish fishermen from receiving the additional allocation that is intended to offset the current negative economic effects of severe decreases in ACLs of several important groundfish stocks.

Authority: 16 U.S.C. 1801 *et seq.*

Dated: March 24, 2020.

Samuel D. Rauch III,

Deputy Assistant Administrator for Regulatory Programs, National Marine Fisheries Service.

[FR Doc. 2020–06460 Filed 4–2–20; 8:45 am]

BILLING CODE 3510–22–P

Proposed Rules

Federal Register
Vol. 85, No. 65
Friday, April 3, 2020

This section of the FEDERAL REGISTER contains notices to the public of the proposed issuance of rules and regulations. The purpose of these notices is to give interested persons an opportunity to participate in the rule making prior to the adoption of the final rules.

NUCLEAR REGULATORY COMMISSION

10 CFR Part 72

[NRC–2019–0224]

RIN 3150–AK40

List of Approved Spent Fuel Storage Casks: TN Americas LLC NUHOMS® EOS Dry Spent Fuel Storage System, Certificate of Compliance No. 1042, Amendment No. 1

AGENCY: Nuclear Regulatory Commission.

ACTION: Proposed rule.

SUMMARY: The U.S. Nuclear Regulatory Commission (NRC) is proposing to amend its spent fuel storage regulations by revising the TN Americas LLC NUHOMS® EOS Dry Spent Fuel Storage System listing within the ''List of approved spent fuel storage casks'' to include Amendment No. 1 to Certificate of Compliance No. 1042. Amendment No. 1 makes the following changes: Adds a new basket type (Type 4) to allow for the loading of intact, damaged, or failed fuel; adds another new basket type (Type 5) with low conductivity poison basket plates and low emissivity coated steel basket plates; accepts fuel assemblies with a minimum two-year cooling time, in selected locations within the basket; adds the NUHOMS® MATRIX design as an alternative to the EOS horizontal storage module design for the storage of spent fuel; and makes additional revisions to the certificate of compliance and the technical specifications for consistency and clarity.

DATES: Submit comments by May 4, 2020. Comments received after this date will be considered if it is practical to do so, but the NRC is able to ensure consideration only for comments received on or before this date.

ADDRESSES: You may submit comments by any of the following methods:

- *Federal Rulemaking website:* Go to *https://www.regulations.gov* and search for Docket ID NRC–2019–0224. When preparing and submitting your comments, see ''Tips for Submitting Effective Comments'' at *https://www.regulations.gov/docs/Tips_For_Submitting_Effective_Comments.pdf.* Address questions about NRC dockets to Carol Gallagher; telephone: 301–415–3463; email: *Carol.Gallagher@nrc.gov.* For technical questions, contact the individuals listed in the **FOR FURTHER INFORMATION CONTACT** section of this document.
- *Email comments to: Rulemaking.Comments@nrc.gov.* If you do not receive an automatic email reply confirming receipt, then contact us at 301–415–1677.
- *Fax comments to:* Secretary, U.S. Nuclear Regulatory Commission at 301–415–1101.
- *Mail comments to:* Secretary, U.S. Nuclear Regulatory Commission, Washington, DC 20555–0001, ATTN: Rulemakings and Adjudications Staff.
- *Hand deliver comments to:* 11555 Rockville Pike, Rockville, Maryland 20852, between 7:30 a.m. and 4:15 p.m. (Eastern Time) Federal workdays; telephone: 301–415–1677.

For additional direction on obtaining information and submitting comments, see Section I, ''Obtaining Information and Submitting Comments'' in the **SUPPLEMENTARY INFORMATION** section of this document.

FOR FURTHER INFORMATION CONTACT: Christian Jacobs, Office of Nuclear Material Safety and Safeguards; telephone: 301–415–6825; email: *Christian.Jacobs@nrc.gov* or Nicole Fields, Office of Nuclear Material Safety and Safeguards; telephone: 630–829–9570; email: *Nicole.Fields@nrc.gov.* Both are staff of the U.S. Nuclear Regulatory Commission, Washington, DC 20555–0001.

SUPPLEMENTARY INFORMATION:

Table of Contents

I. Obtaining Information and Submitting Comments
II. Rulemaking Procedure
III. Background
IV. Plain Writing
V. Availability of Documents

I. Obtaining Information and Submitting Comments

A. Obtaining Information

Please refer to Docket ID NRC–2019–0224 when contacting the NRC about the availability of information for this action. You may obtain publicly-available information related to this action by any of the following methods:

- *Federal Rulemaking website:* Go to *https://www.regulations.gov* and search for Docket ID NRC–2019–0224.
- *NRC's Agencywide Documents Access and Management System (ADAMS):* You may obtain publicly-available documents online in the ADAMS Public Documents collection at *https://www.nrc.gov/reading-rm/adams.html.* To begin the search, select ''Begin Web-based ADAMS Search.'' For problems with ADAMS, please contact the NRC's Public Document Room (PDR) reference staff at 1–800–397–4209, 301–415–4737, or by email to *pdr.resource@nrc.gov.* For the convenience of the reader, instructions about obtaining materials referenced in this document are provided in Section V, ''Availability of Documents,'' of this document.
- *NRC's PDR:* You may examine and purchase copies of public documents at the NRC's PDR, Room O1–F21, One White Flint North, 11555 Rockville Pike, Rockville, Maryland 20852.

B. Submitting Comments

Please include Docket ID NRC–2019–0224 in your comment submission.

The NRC cautions you not to include identifying or contact information that you do not want to be publicly disclosed in your comment submission. The NRC will post all comment submissions at *https://www.regulations.gov* as well as enter the comment submissions into ADAMS. The NRC does not routinely edit comment submissions to remove identifying or contact information.

If you are requesting or aggregating comments from other persons for submission to the NRC, then you should inform those persons not to include identifying or contact information that they do not want to be publicly disclosed in their comment submission. Your request should state that the NRC does not routinely edit comment submissions to remove such information before making the comment submissions available to the public or entering the comment into ADAMS.

II. Rulemaking Procedure

Because the NRC considers this action to be non-controversial, the NRC is publishing this proposed rule concurrently with a direct final rule in

the Rules and Regulations section of this issue of the **Federal Register**. The direct final rule will become effective on June 17, 2020. However, if the NRC receives any significant adverse comment by May 4, 2020, then the NRC will publish a document that withdraws the direct final rule. If the direct final rule is withdrawn, the NRC will address the comments in a subsequent final rule. Absent significant modifications to the proposed revisions requiring republication, the NRC will not initiate a second comment period on this action in the event the direct final rule is withdrawn.

A significant adverse comment is a comment where the commenter explains why the rule would be inappropriate, including challenges to the rule's underlying premise or approach, or would be ineffective or unacceptable without a change. A comment is adverse and significant if:

(1) The comment opposes the rule and provides a reason sufficient to require a substantive response in a notice-and-comment process. For example, a substantive response is required when:

(a) The comment causes the NRC to reevaluate (or reconsider) its position or conduct additional analysis;

(b) The comment raises an issue serious enough to warrant a substantive response to clarify or complete the record; or

(c) The comment raises a relevant issue that was not previously addressed or considered by the NRC.

(2) The comment proposes a change or an addition to the rule, and it is apparent that the rule would be ineffective or unacceptable without incorporation of the change or addition.

(3) The comment causes the NRC to make a change (other than editorial) to the rule.

For a detailed discussion of the proposed rule changes and associated analyses, see the direct final rule published in the Rules and Regulations section of this issue of the **Federal Register**.

III. Background

Section 218(a) of the Nuclear Waste Policy Act of 1982, as amended, requires that ''[t]he Secretary [of the Department of Energy] shall establish a demonstration program, in cooperation with the private sector, for the dry storage of spent nuclear fuel at civilian nuclear power reactor sites, with the objective of establishing one or more technologies that the [Nuclear Regulatory] Commission may, by rule, approve for use at the sites of civilian nuclear power reactors without, to the maximum extent practicable, the need for additional site-specific approvals by the Commission.'' Section 133 of the Nuclear Waste Policy Act states, in part, that ''[the Commission] shall, by rule, establish procedures for the licensing of any technology approved by the Commission under Section 219(a) [sic: 218(a)] for use at the site of any civilian nuclear power reactor.''

To implement this mandate, the Commission approved dry storage of spent nuclear fuel in NRC-approved casks under a general license by publishing a final rule that added a new subpart K in part 72 of title 10 of the Code of Federal Regulations (10 CFR) entitled, ''General License for Storage of Spent Fuel at Power Reactor Sites.'' This rule also established a new subpart L in 10 CFR part 72 entitled, ''Approval of Spent Fuel Storage Casks,'' which contains procedures and criteria for obtaining NRC approval of spent fuel storage cask designs. The NRC subsequently issued a direct final rule on March 24, 2017, that approved the TN Americas LLC NUHOMS® EOS Dry Spent Fuel Storage System design and added it to the list of NRC-approved cask designs in § 72.214 as Certificate of Compliance No. 1042.

IV. Plain Writing

The Plain Writing Act of 2010 (Pub. L. 111–274) requires Federal agencies to write documents in a clear, concise, and well-organized manner. The NRC has written this document to be consistent with the Plain Writing Act as well as the Presidential Memorandum, ''Plain Language in Government Writing,'' published June 10, 1998. The NRC requests comment on the proposed rule with respect to clarity and effectiveness of the language used.

V. Availability of Documents

The documents identified in the following table are available to interested persons through one or more of the following methods, as indicated.

Document	ADAMS accession No./ **Federal Register** citation
Proposed Certificate of Compliance No. 1042, Amendment No. 1	ML19290H608.
Proposed Technical Specifications, Certificate of Compliance No. 1042, Amendment No. 1, Appendix A	ML19290H605.
Preliminary Safety Evaluation Report, Certificate of Compliance No. 1042, Amendment No. 1	ML19290H606.
Application for Amendment 1 to the NUHOMS EOS System, Revision 0, dated February 15, 2018	ML18053A220 (package).
Acceptance Review of TN Americas, LLC Application for Certificate of Compliance No. 1042, Amendment 1 to NUHOMS EOS System, Rev. 1—Response to Request for Supplemental Information, dated June 14, 2018.	ML18178A029 (package).
Acceptance Review (Continued) of TN Americas LLC Application for Certificate of Compliance No. 1042, Amendment No. 1, to the NUHOMS EOS System, Revision 2—Response to Second Request for Supplemental Information, dated August 30, 2018.	ML18255A124 (package).
Application for Amendment 1 to NUHOMS EOS Certificate of Compliance No. 1042, Rev. 3—Response to Request for Additional Information, dated February 19, 2019.	ML19058A410 (package).
Application for Amendment 1 to NUHOMS EOS Certificate of Compliance No. 1042, Revision 4—Computer Files Associated with Certain CoC 1042 Amendment 1 Request for Additional Information Items (Docket No. 72–1042, CAC No. 001028, EPID: L–2018–LLA–0043), dated March 21, 2019.	ML19084A054.
Submittal of Amendment 1 to NUHOMS EOS Certificate of Compliance No. 1042, Revision 5—Revised Responses to Request for Additional Information, dated June 19, 2019.	ML19176A315 (package).
Application for Amendment 1 to NUHOMS EOS Certificate of Compliance No. 1042, Revision 6—Revised Responses to Request for Additional Information, dated July 16, 2019.	ML19204A228 (package).
E-Mail from G. Mathues/Orano TN to C. Jacobs/NRC re: EOS Amendment 1 CoC Clarifications, dated July 17, 2019.	ML19220A177 (package).
Transmittal Letter Regarding Application for Amendment 1 to NUHOMS EOS Certificate of Compliance No. 1042, Revision 7—Technical Specifications Table 3 Editorial Correction, dated August 29, 2019.	ML19248C254 (package).
Orano USA—Application for Amendment 1 to NUHOMS EOS Certificate of Compliance No. 1042, Revision 8—Appendix 3.9.7 Editorial Correction, dated October 1, 2019.	ML19274B914.
Agreement State Program Policy Statement, dated October 18, 2017	82 FR 48535.
Plain Language in Government Writing, dated June 10, 1998	63 FR 31885.
Storage of Spent Fuel In NRC-Approved Storage Casks at Power Reactor Sites: Final Rule, dated July 18, 1990	55 FR 29181.

Document	ADAMS accession No./ **Federal Register** citation
List of Approved Spent Fuel Storage Casks: TN Americas LLC, NUHOMS® EOS Dry Spent Fuel Storage System, Certificate of Compliance No. 1042: Direct Final Rule, dated March 24, 2017.	82 FR 14987.
Certificate of Compliance No. 1042, Initial Certificate, Corrected	ML17215A161.

The NRC may post materials related to this document, including public comments, on the Federal Rulemaking website at *https://www.regulations.gov* under Docket ID NRC–2019–0224. The Federal Rulemaking website allows you to receive alerts when changes or additions occur in a docket folder. To subscribe: (1) Navigate to the docket folder (NRC–2019–0224); (2) click the ''Sign up for Email Alerts'' link; and (3) enter your email address and select how frequently you would like to receive emails (daily, weekly, or monthly).

List of Subjects in 10 CFR Part 72

Administrative practice and procedure, Hazardous waste, Indians, Intergovernmental relations, Nuclear energy, Penalties, Radiation protection, Reporting and recordkeeping requirements, Security measures, Spent fuel, Whistleblowing.

Dated at Rockville, Maryland, this 18th day of March, 2020.

For the Nuclear Regulatory Commission.

Margaret M. Doane,

Executive Director for Operations.

[FR Doc. 2020–06663 Filed 4–2–20; 8:45 am]

BILLING CODE 7590–01–P

CONSUMER PRODUCT SAFETY COMMISSION

16 CFR Parts 1112, 1130, and 1240

[CPSC Docket No. 2020–0010]

Safety Standard for Crib Bumpers/Liners

AGENCY: Consumer Product Safety Commission.

ACTION: Notice of proposed rulemaking.

SUMMARY: The Danny Keysar Child Product Safety Notification Act, *i.e.,* section 104 of the Consumer Product Safety Improvement Act of 2008 (CPSIA), requires the United States Consumer Product Safety Commission (CPSC) to promulgate consumer product safety standards for durable infant or toddler products. These standards are to be ''substantially the same as'' applicable voluntary standards, or more stringent than the voluntary standard if the Commission concludes that more stringent requirements would further reduce the risk of injury associated with the product. The Commission is proposing a safety standard for crib bumpers/liners, and it is also proposing to identify crib bumpers/liners as durable infant or toddler products subject to CPSC's consumer registration requirements. In addition, the Commission is proposing an amendment to include crib bumpers in the list of notice of requirements (NORs) issued by the Commission.

DATES: Submit comments by June 17, 2020.

ADDRESSES: Comments related to the Paperwork Reduction Act aspects of the marking, labeling, and instructional literature requirements of the proposed mandatory standard for crib bumpers/liners should be directed to the Office of Information and Regulatory Affairs, the Office of Management and Budget, Attn: CPSC Desk Officer, FAX: 202–395–6974, or emailed to *oira_submission@omb.eop.gov*.

Other comments, identified by Docket No. CPSC–2020–0010, may be submitted electronically or in writing:

Electronic Submissions: Submit electronic comments to the Federal eRulemaking Portal at: *http://www.regulations.gov*. Follow the instructions for submitting comments. The Commission does not accept comments submitted by electronic mail (email), except through *www.regulations.gov*. The Commission encourages you to submit electronic comments by using the Federal eRulemaking Portal, as described above.

Written Submissions: Submit written submissions by mail/hand delivery/courier to: Office of the Secretary, Consumer Product Safety Commission, Room 820, 4330 East West Highway, Bethesda, MD 20814; telephone (301) 504–7923.

Instructions: All submissions received must include the agency name and docket number for this proposed rulemaking. All comments received may be posted without change, including any personal identifiers, contact information, or other personal information provided, to: *http://www.regulations.gov*. Do not submit confidential business information, trade secret information, or other sensitive or protected information that you do not want to be available to the public. If furnished at all, such information should be submitted in writing.

Docket: For access to the docket to read background documents or comments received, go to: *http://www.regulations.gov,* and insert the docket number, CPSC–2020–0010, into the ''Search'' box, and follow the prompts.

FOR FURTHER INFORMATION CONTACT: Timothy P. Smith, Project Manager, Directorate for Engineering Sciences, U.S. Consumer Product Safety Commission, 5 Research Place, Rockville, MD 20850; telephone: (301) 987–2557; email: *tsmith@cpsc.gov*.

SUPPLEMENTARY INFORMATION: The CPSC proposes to issue a standard for crib bumpers/liners under section 104 of the CPSIA, amend the consumer registration rule to include crib bumpers/liners, and add crib bumpers/liners to the NOR list in 16 CFR part 1112.

I. Background and Statutory Authority

Section 104(b) of the CPSIA, part of the Danny Keysar Child Product Safety Notification Act, requires the Commission to: (1) Examine and assess the effectiveness of voluntary consumer product safety standards for durable infant or toddler products, in consultation with representatives of consumer groups, juvenile product manufacturers, and independent child product engineers and experts; and (2) promulgate consumer product safety standards for durable infant or toddler products. Standards issued under section 104 are to be ''substantially the same as'' the applicable voluntary standards, or more stringent than the voluntary standard if the Commission concludes that more stringent requirements would further reduce the risk of injury associated with the product.

Section 104(f)(1) of the CPSIA defines the term ''durable infant or toddler product'' as ''a durable product intended for use, or that may be reasonably expected to be used, by children under the age of 5 years.'' The statute also specifies 12 categories of products that fall within the definition. Crib bumpers are not listed among the products in section 104(f); however, on October 19, 2016, the Commission voted to amend the agency's fiscal year 2017 (FY 2017) Operating Plan, directing staff

to initiate rulemaking under section 104 of the CPSIA to promulgate a mandatory consumer product safety standard to address the risk of injury associated with the use of padded crib bumpers.[1] The FY 2017 Operating Plan also directed staff to propose to amend the definition of ''durable infant or toddler product'' in the consumer registration rule to include ''crib bumpers.''

Pursuant to section 104(b)(1)(A) of the CPSIA, CPSC staff consulted with manufacturers, retailers, trade organizations, laboratories, consumer advocacy groups, consultants, and members of the public in the development of this notice of proposed rulemaking (NPR), largely through the ASTM process. ASTM subcommittee members represent producers, users, consumers, government, and academia.[2] Staff began the consultation process for this rulemaking in December 2016 in a letter to ASTM requesting that the ASTM F15.19 Subcommittee on Infant Bedding form task groups related to (1) firmness requirements, (2) airflow requirements, and (3) warning and instructional requirements, to initiate activities to update ASTM F1917, *Standard Consumer Safety Performance Specification for Infant Bedding and Related Accessories,* with more stringent requirements that will further reduce the risk of injury associated with crib bumpers. Since then, CPSC staff has been actively participating in the ASTM subcommittee activities to address these issues.

This NPR incorporates by reference the most recent voluntary standard developed by ASTM International, ASTM F1917–12, *Standard Consumer Safety Performance Specification for Infant Bedding and Related Accessories,* with substantial modifications that the Commission concludes would further reduce the risk of injury or death from crib bumpers/liners. If finalized, the ASTM standard incorporated by reference, as modified, would be a mandatory safety rule under the Consumer Product Safety Act (CPSA).

The testing and certification requirements of section 14(a) of the CPSA apply to the standards promulgated under section 104 of the CPSIA. Section 14(a)(3) of the CPSA requires the Commission to publish an NOR for the accreditation of third party conformity assessment bodies (test laboratories) to assess conformity with a children's product safety rule to which a children's product is subject. The proposed rule for crib bumpers/liners, if issued as a final rule, would be a children's product safety rule that requires the issuance of an NOR. To meet the requirement that the Commission issue an NOR for the crib bumpers/liners standard, this NPR also proposes to amend 16 CFR part 1112 to include 16 CFR part 1240, the CFR section where the crib bumpers standard will be codified, if the standard becomes final.

II. Product Description

Traditionally, crib bumpers are infant bedding accessories that attach to the interior perimeter of a crib and function as a barrier between the infant and the sides of the crib. However, the design of these products can vary. The most common type of crib bumper consists of one or more rectangular fabric panels, constructed of cotton or polyester, with filling material for padding and with fasteners to attach to a crib. The fasteners are often ties that are secured to the crib corner posts, crib slats or spindles, or both. However, other fastening methods exist. These products commonly are marketed as preventing injury to infants from impacts against the sides of a crib and preventing limb entrapments between crib slats. Bumpers also are used to decorate the infant's sleep environment and might be promoted as making a crib more comfortable.

Less common designs of crib bumpers include ''vertical'' bumpers or liners, which essentially are a series of small bumpers that individually enshroud each vertical crib slat or spindle. These products generally claim to offer benefits that are comparable to traditional bumpers while allowing airflow through the sides of a crib. Vertical bumpers may also be marketed with a longer recommended useful life span than traditional bumpers for children with special needs. More recent crib bumper variants are braided bumpers, which consist of two or more fabric sleeves, containing filling material, and that are braided together. Other bumper variants exist that look similar to traditional bumpers but are marketed with claims of being ''breathable.'' Mesh crib liners are similar in their marketing claims that the products are breathable, but these products tend to be thinner than traditional bumpers, with minimal padding, if any, because they are not intended to prevent impact injuries.

All of these products, like traditional crib bumpers, line the interior sides of a crib and functionally limit or prevent access to the crib sides, so, in principle, all of these products might present similar hazards and benefits to infants. Thus, this proposed rule includes all of these products within its scope. Throughout this **Federal Register** document, the term ''crib bumpers'' or ''bumpers'' includes these other products, unless specifically excluded.[3]

III. Incident Data

CPSC has identified 113 fatal incidents associated with crib bumpers (*i.e.,* cases in which a crib bumper was present in the sleep environment) reported to have occurred from January 1, 1990 through March 31, 2019.[4] CPSC has identified 113 nonfatal incidents and concerns that involved crib bumpers and were reported to CPSC from January 1, 2008, through March 31, 2019. Because reporting is ongoing, the number of reported fatalities and nonfatal incidents and concerns may change in the future. Specifically, data for years 2017 through 2019 are not complete.

A. Fatalities

CPSC has reports of 113 fatalities associated with bumpers, which were reported to have occurred between January 1, 1990 and March 31, 2019. To CPSC's knowledge, all bumpers involved in these incidents were traditional bumpers, and all but eight involved the bumper inside a crib.[5]

CPSC staff classified 30 of the 113 crib bumper-related fatalities as ''incidental.'' In three of these cases, the cause of death was known to have been exclusively medical in nature, and therefore unrelated to the bumper. In 27 of these 30 cases, although a bumper was present, there was no evidence of bumper contact with the infant.

Of the remaining 83 reported fatalities, 75 (90 percent) involved infants younger than 12 months and 51 (61 percent) involved infants 4 months old or younger. Only three of the 83

[1] The final, approved FY 2017 Operating Plan can be found here: *https://www.cpsc.gov/s3fs-public/CPSCFY2017OpPlan.pdf.* The Commission reaffirmed this decision in the FY18 Operating Plan, which can be found here: *https://www.cpsc.gov/s3fs-public/FY_2018_Operating_Plan_August302017.pdf.*

[2] ASTM International website: *www.astm.org,* About ASTM International.

[3] As discussed herein, ASTM F1917–12 does not contain a definition of ''crib bumpers.''

[4] Although this nearly 30-year timeframe is considerably longer than the 10-year timeframe that CPSC commonly employs in other section 104 rulemaking activities, CPSC staff's 2016 briefing package concluded that all the reported fatalities that staff examined and considered most likely to be addressable occurred before 2008. (*https://www.cpsc.gov/s3fs-public/StaffResponsetothe RecordofCommissionActiononCribBumper.pdf.*) Thus, to be as inclusive as possible, CPSC has chosen to retain reported fatalities as far back as 1990.

[5] Three incidents occurred in a toddler bed, three in a bassinet, one in a playpen, and one on a mattress on the floor.

reported fatalities involved children 2 years old or older; one of these children had health issues, one was developmentally delayed, and the third went into cardiac arrest about a year after the bumper-related incident, when the child was likely an infant.

B. Nonfatal Incidents and Concerns

CPSC has reports of 113 bumper-related nonfatal incidents and concerns that were related to crib bumpers and were reported to CPSC from January 1, 2008, through March 31, 2019. Of these 113 nonfatal reports, 60 resulted in injury, 50 did not result in injury, and the disposition of 3 is unknown. Fifteen (13 percent) of the 113 nonfatal incidents and concerns reportedly involved a breathable bumper or mesh liner. Thirty-five cases did not report the child's age. Of the remaining 78 nonfatal incidents and concerns, 47 (60 percent) involved infants younger than 12 months.

C. Product Recalls

CPSC staff reviewed recalls involving crib bumpers that occurred from July 9, 1990 through April 17, 2019. Staff identified five consumer-level recalls during that period to mitigate against risks of entanglement, entrapment, suffocation, and choking from loose threads (*e.g.,* unraveling ties, breaking threads and seams) and from bumper ties that either detached from the product or were too long.

IV. Hazard Pattern Identification

A. Fatal Incidents

Generally, the cause of death in the fatal incidents was reported as asphyxia, suffocation, or Sudden Infant Death Syndrome (SIDS). A number of reports indicated that in addition to a crib bumper being present, the sleeping environment contained multiple additional items, such as pillows, blankets, and stuffed dolls. In many of these incidents, it is unclear what role, if any, the crib bumper played in the death of the child. CPSC staff, through group consensus, categorized the fatalities into hazard scenarios based on the best available account information about the position of the child when found and the cause of death ruled by the medical examiner.

As mentioned previously, 30 of the 113 reported fatalities were incidental. Table 1 shows the distribution of the remaining 83 non-incidental reported fatalities by hazard scenarios.

TABLE 1—REPORTED FATALITIES BY HAZARD SCENARIO

[January 1, 1990–March 31, 2019]

Hazard	Reported fatalities	Percent [6]
Entrapment/Wedging	44	53
Against Object in Crib	*25*	*30*
In Perimeter of Crib	*13*	*16*
Other	*6*	*7*
Contact Without Entrapment/Wedging	27	33
Contact With Possible Entrapment/Wedging	7	8
Contact Outside Crib	5	6
Total	83	100

Source: CPSRMS and NEISS databases.
Reporting is ongoing for these databases, especially for 2017–2019.

1. *Entrapment/Wedging:* In 53 percent (44 out of 83 fatalities) of the reported fatalities, the child was found wedged or entrapped against the bumper. This category was divided into three scenarios in which the child was found wedged or entrapped.

a. Against Object in Crib: In 30 percent (25 out of 83 fatalities) of the reported fatalities, the child was entrapped or wedged between a crib bumper and another object in the crib, such as a bed pillow, an infant recliner, or a cushion.

b. In Perimeter of Crib: In 16 percent (13 out of 83 fatalities) of the reported fatalities the child was found entrapped between the mattress and the side of the crib, on which a crib bumper was installed. Nine of these cases involved a crib that was structurally compromised, with features such as detached crib side rails, or missing or detached crib slats.

c. Other: Seven percent (6 out of 83 fatalities) of the reported fatalities involved entrapment against a crib bumper in some scenario not covered by the two prior Entrapment/Wedging hazard patterns, such as a child being found wedged under the crib bumper.

2. *Contact Without Entrapment/Wedging:* In 33 percent (27 out of 83 fatalities) of the reported fatalities, the child was reportedly in contact with, but not entrapped or wedged against, the crib bumper.

3. *Contact With Possible Entrapment/Wedging:* In eight percent (7 out of 83 fatalities) of the reported fatalities, the child was found to be in contact with the crib bumper, but the incident scenario lacked sufficient details for the staff to determine whether the child was entrapped or wedged against the bumper. These fatalities typically described the child as being found with his or her face between the mattress and the crib bumper. The incident descriptions often used the phrase ''wedged between'' to describe the position of the child's face when found. However, staff discovered that some incidents without entrapment or wedging used similar language to describe the orientation of the child's face relative to the two surfaces. Thus, incidents in this category did not include sufficient details to enable CPSC staff to conclude whether the child was truly entrapped or wedged against the bumper.

4. *Contact Outside Crib:* Six percent (5 out of 83 fatalities) of the reported fatalities were cases in which the child was in contact with a crib bumper that was outside a crib. Staff is aware of three other incidents involving a bumper outside a crib, but in those incidents there was no evidence of contact with the crib bumper, and thus, these three fatalities were ruled incidental and not included.

B. Nonfatal Incidents

Table 2 summarizes the hazard patterns for the bumper-related nonfatal incidents. In cases where multiple hazards were mentioned, the hazard

[6] Percentages may not sum to 100 due to rounding.

that could have caused the most severe injury was used.

TABLE 2—REPORTED NONFATAL INCIDENTS OR CONCERNS BY HAZARD PATTERN

[January 1, 2008–March 31, 2019]

Hazard	Incidents/ complaints	Percent [7]
Slat Entrapments	38	34
Climbing or Climb-Outs	12	11
Under or Behind Bumper	10	9
Near-Strangulation or Entanglements	8	7
Entrapped Against Object in Crib	7	6
Choking or Ingestion of Small Parts	7	6
Other	14	12
Concerns	17	15
Total	113	100

Source: CPSRMS and NEISS databases.
Reporting is ongoing for these databases, especially for 2017–2019.

1. *Slat Entrapments:* Thirty-four percent (38 out of 113 non-fatalities) of reported nonfatal incidents involved arm or leg entrapments between the slats of the crib, even though a crib bumper was present. Seven of the 38 slat entrapments reportedly involved a breathable bumper or mesh liner. Of the 38 slat entrapments, 27 incurred injuries.

2. *Climbing or Climb-Outs:* Eleven percent (12 out of 113 non-fatalities) of reported nonfatal incidents occurred when a child, old enough to stand up, reportedly used the bumper as a step to climb. The child often fell back into the crib or fell out of the crib. The youngest children in these incidents were two 7-month-old children.

3. *Under or Behind Bumper:* In nine percent (10 out of 113 non-fatalities) of reported nonfatal incidents, the child or some part of the child was found under or behind (*i.e.,* against the crib side) the crib bumper. In seven cases, the child reportedly was trapped under or behind the bumper. In two cases, the bumper covered the child's face, but the child was not entrapped. In one case, the face was under the bumper while the legs were trapped in the slats. Some of these cases reported that the bumper was missing bottom ties.

4. *Near-Strangulation or Entanglements:* Seven percent (8 out of 113 non-fatalities) of reported nonfatal incidents involved the tie, threading, or stitched-on components of a crib bumper becoming loose and wrapping around body parts of the child. Half of these incidents specifically mention the head, mouth, or neck being wrapped up by a piece of a crib bumper. However, none of these incidents involved a bumper tie wrapping around a child's neck.

5. *Entrapped Against Object in Crib:* In six percent (7 out of 113 non-fatalities) of reported nonfatal incidents, the child was entrapped between a crib bumper and another object in the crib, such as a sleep positioner or an infant recliner.

6. *Choking or Ingestion of Small Parts:* Six percent (7 out of 113 non-fatalities) of reported nonfatal incidents involved choking or ingestions. These incidents generally involved the child putting a piece of the crib bumper, such as decorative stitched-on patterns, the ties, or the stuffing from inside the bumper, into their mouth.

7. *Other:* Twelve percent (14 out of 113 non-fatalities) of reported nonfatal incidents were other issues involving a child, including: Bumper integrity issues such as ties detaching or being pulled off, stitching being pulled out, and paint rubbing off; injuries caused by contact with crib bumpers; needles found in the padding of the bumper; injuries, such as cuts and bruises on the crib rail, that occurred despite the presence of the bumper; portions of the crib (*e.g.,* crib rails or slats, crib side) breaking or separating while bumpers were in use; and an entrapment between a crib toy and the crib mattress while in contact with the bumpers.

8. *Concerns:* Fifteen percent (17 out of 113 non-fatalities) of reported nonfatal incidents and concerns did not involve an actual incident with a child, but instead, were general crib bumper-related problems observed by the parent or complainant. Common examples of concerns with crib bumpers were: Bumper integrity issues such as ties detaching or the bumper coming apart; concerns about poor bumper fit or bumpers missing the lower ties; and general concerns about bumpers posing a safety hazard.

V. Standards for Crib Bumpers

A. International Standard

CPSC is aware of one international standard that contains performance requirements for crib bumpers/liners: BS EN 16780:2018, *Textile child care articles—Safety requirements and test methods for children's cot bumpers.* (BS EN 16780:2018).[8] BS EN 16780:2018 has requirements to address falls from the crib, suffocation on materials, strangulation on cords, entrapment of fingers/toes, sharp or abrasive edges, choking, internal injuries from magnets, entrapment, strangulation, choking, cuts and abrasions. EN 16780:2018 also includes requirements pertaining to chemical hazards, fire hazards, and hygiene hazards.

EN 16780:2018 requires that the design of the product prevent the crib bumper/liner from falling into the crib, but the design requirement does not have a test method. The standard does not have a requirement for the firmness of crib bumpers/liners. Additionally, although there are specific requirements (prohibitions) for plastic surfaces that could affect breathability, the rationale for that requirement assumes the air flow characteristics of the underlying woven fabric and filling materials are

[7] Percentages may not sum to 100 due to rounding.

[8] The foreword to BS EN 16780:2018 states that the British Standard is the UK implementation of EN 16780:2018, and it partially supersedes BS 1877–10:2011+A1:2012. The foreword also states that ''BSI, as a member of CEN, is obliged to publish EN 16780:2018 as a British Standard. However, attention is drawn to the fact that during the development of this European Standard, the UK committee voted against its approval.'' BS 1877–10:2011+A1:2012 has length and strength requirements for crib bumper ties similar to those in EN 16780:2018, but does not have any thickness or firmness requirements for crib bumpers.

adequate. The standard provides no basis for its rationale and lacks a test method. The contact of an infant's face into a soft crib bumper/liner is not addressed.

B. State and Local Standards

Some state and local jurisdictions have banned the sale of crib bumpers.

• *Chicago, IL:* The sale or lease of any ''crib bumper pad'' is illegal in Chicago, IL, effective April 5, 2012.[9] The Chicago code defines a ''crib bumper pad'' as: ''any padding material, including but not limited to a roll of stuffed fabric, which is designed for placement within a crib to cushion one or more of the crib's inner sides adjacent to the crib mattress.''

• *Maryland:* Effective June 21, 2013, Maryland's Department of Health and Mental Hygiene (DHMH) published final regulations that declare ''baby bumper pads'' to be a hazardous material that may not be shipped or sold to a purchaser in Maryland. The Maryland regulation defines ''baby bumper pad'' as: ''a pad or pads of non-mesh material resting directly above the mattress in a crib, running the circumference of the crib or along the length of any of the interior sides of the crib, and intended to be used until the age that an infant pulls to a stand.'' The regulation also states that a ''new'' ASTM voluntary standard for these products might replace the ban if the DHMH Secretary determines that products complying with the ASTM standard are not a danger to public health and safety, and that the Secretary may suspend the regulation if the CPSC affirmatively finds that the benefits of certain bumpers exceed the risks. The ban does not apply to mesh crib liners or to vertical bumpers that wrap tightly around each individual crib rail.[10]

• *Watchung, NJ:* On December 15, 2016, the borough of Watchung, NJ, amended its police regulations to prohibit the sale or lease of ''crib bumper pads,''[11] which are defined as: ''any padding material, including but not limited to a roll of stuffed fabric or breathable liner, which is designed for placement within a crib to cushion one or more of the crib's inner sides adjacent to the crib mattress.'' The ordinance explicitly states that mesh liners are not included in the definition of ''crib bumper pad.''

• *Ohio:* On April 6, 2017, Ohio banned the manufacture, sale, or delivery of ''crib bumper pads,''[12] defined as: ''any padding material, including a roll of stuffed fabric, that is designed for placement within a crib to cushion one or more of the crib's inner sides adjacent to the crib mattress.'' The definition also states that ''crib bumper pad'' excludes mesh crib liners, regardless of whether CPSC includes mesh liners in its definition of ''crib bumper pad.'' The ban excludes mesh crib liners for no more than 3 years after the effective date, unless such liners comply with consumer product safety standards promulgated by CPSC to ensure sufficient permeability and breathability to prevent infant suffocation.

The states of Missouri, New York, and Vermont are considering similar bans. In addition, in June 2019, a bill to ban the manufacture, importation, and sale of crib bumpers in the United States, the ''Safe Cribs Act of 2019'' (H.R. 3170 and S. 1816), was introduced in Congress. The bill, as introduced, defined the term ''crib bumper'' broadly to include not only traditional padded crib bumpers, but also mesh crib liners and vertical bumpers, or crib slat covers. However, on July 10, 2019, the House Committee on Energy and Commerce, Subcommittee on Consumer Protection and Commerce, amended the definition of ''crib bumper'' in H.R. 3170 to exclude mesh liners.

VI. Voluntary Standard—ASTM F1917

A. Background

ASTM F1917, *Standard Consumer Safety Performance Specification for Infant Bedding and Related Accessories,* contains requirements for infant bedding and related accessories, including crib bumpers, in the United States. The current version of the voluntary standard was published in 2012 (ASTM F1917–12). This is the third revision since the standard was first published in 1999.

B. Description of the Current Voluntary Standard—ASTM F1917–12

ASTM F1917–12 includes the following key provisions: Scope, terminology, general requirements, performance requirements, test methods, and labeling requirements. Tab C of the staff's briefing package provides details about the standard. We summarize key provisions below.

The scope section of ASTM F1917–12 provides that the standard applies to ''infant bedding and related accessories.'' Section 3.1.4 of ASTM F1917–12 defines the term ''infant bedding and related accessories'' to include the following items intended for use in a nursery: Fitted sheets, blankets, dust ruffles, covers and drapes for canopies, pillows, mattress covers, diaper stackers, fabric wall, bumper guards, headboard bumper guards, and comforters. This proposed rule would apply only to crib bumpers. ASTM F1917–12 does not define ''crib bumper.''

ASTM F1917–12 contains general requirements for the bumper's attachment means (*e.g.,* ties), decorative components, and threads. Section 5 of ASTM F1917–12 requires crib bumpers to be ''capable of being secured at or near all corners and at the midpoints of the long sides of the crib,'' and specifies that bumpers intended for circular cribs must be capable of being secured at intervals not exceeding 26 inches.

Section 6 of ASTM F1917–12 includes performance requirements and test methods for unsupported vinyls, maximum bumper thickness, and bumper pad tie strength. ASTM F1917–12 defines unsupported vinyl as vinyl that is not integrated to a backing material. The standard requires that unsupported vinyl that is accessible to an infant be 0.012-in (0.3mm) thickness or greater. The maximum bumper thickness requirement in ASTM F1917–12 uses a bumper thickness test fixture to limit the maximum thickness of crib bumpers to about 2 inches. The bumper thickness test applies only to crib bumpers manufactured of fabric and filled with a fibrous material. The bumper pad tie strength requirement in AST MF1917–12 only applies to ties, and no other means of attachment.

Section 8 of ASTM F1917–12 contains warning and instructional requirements for infant bedding and related accessories, and includes warnings that must appear on certain products covered by the standard.

VII. Assessment of the Voluntary Standard ASTM F1917–12

CPSC assessed the adequacy of ASTM F1917–12 on the basis of the incident data and hazard patterns, and on CPSC's review of the current voluntary standard for issues requiring clarification. A more stringent standard than the current ASTM standard is necessary to further reduce the risk of injury associated with crib bumpers. Accordingly, the proposed rule includes substantial changes and additions to the existing voluntary standard requirements.

A. Addition of Crib Bumper Definition

ASTM F1917–12 includes several performance and labeling requirements for crib bumpers. However, the

[9] Chicago, IL., Mun. Code section 7–36–112.

[10] See *https://phpa.health.maryland.gov/mch/Pages/crib-bumpers.aspx.*

[11] Revised General Ordinances of the Borough of Watchung, Chapter VI section 6–13, Ord. No. 2016–15.

[12] 37 Ohio Rev. Code section 3713.

voluntary standard identifies these products inconsistently as: ''bumper pad'' (section 6.3, 7.4, 7.4.1, Note 2), ''bumper guards'' (3.1.4, 5.1, 5.4), ''headboard bumper guards'' (3.1.4, 5.1), ''headboard/bumper set'' (8.2.1), ''bumper'' (3.1.1, 6.2, Figure 1 caption, 7.3, 8.2.1), and ''crib bumper'' (6.2). The voluntary standard does not define any of these terms. The Commission is proposing a broad definition that encompasses traditional crib bumpers as well as mesh crib liners. Products that cover only the top rail of a crib would not be considered crib bumpers. Such top rail covers do not serve the same function as a crib bumper or mesh liner. Taking these factors into account, the Commission proposes to define products that are subject to the rule in the following way:

crib bumper/liner, n—any product intended to be placed against any portion of the interior perimeter of a crib, and that reduces or eliminates an infant's access to the crib sides, slats, spindles, or the spaces between these components.

Discussion—Such products are commonly referred to as crib bumpers, crib liners, mesh liners, bumper pads, bumper guards, and headboard panels, but do not include products intended to cover only the top horizontal rail of a crib.

Defining the products that are subject to the rule using consistent terms will further reduce the risk of injury associated with crib bumpers by providing clarity to manufacturers and testing laboratories about which products are subject to the requirements of the proposed rule. The ASTM Infant Bedding subcommittee intends to ballot this definition as part of its revisions to the F1917 standard.

B. Suffocation Hazard

1. Crib Bumper Thickness

Pillows, and other soft, pillow-like objects can pose a suffocation hazard to infants by conforming to the face and blocking the nose and mouth. ASTM F1917–12 addresses the potential suffocation hazard posed by crib bumpers by limiting the maximum thickness of crib bumpers to about 2 inches, thereby eliminating soft, pillow-like crib bumpers from the marketplace. The ASTM standard specifies a bumper thickness test fixture to assess the bumper's thickness, by limiting the maximum thickness of crib bumpers to about 2 inches, thereby eliminating soft, pillow-like crib bumpers from the marketplace.[13] [14] However, ASTM F1917–12 only applies this test to bumpers manufactured of fabric and filled with a fibrous material. The Commission proposes to apply this thickness requirement to all crib bumpers/liners, regardless of their construction, because bumpers made from other materials (*e.g.,* filled with foam) still could be soft and pillow-like, and pose the same hazard. Broadening the existing requirement to apply to all crib bumpers/liners would further reduce the risk of suffocation. The ASTM Infant Bedding subcommittee intends to ballot a similar change to the F1917 standard.

CPSC staff's testing of crib bumper samples also identified some bumpers that passed through the bumper test fixture, but at such an extremely slow rate that staff found it difficult to determine whether the bumper passed or failed the test. Thus, the Commission is proposing to include a minimum rate at which the bumper must pass through the fixture to more clearly delineate a pass from a fail. Specifically, the Commission proposes a rate of no less than 0.5 inches per second. Because the surface finish of the slot in the bumper thickness test fixture can affect how quickly a bumper can slide through it and can introduce variation among test laboratories and fixtures, the Commission is also proposing a minimum finish requirement for the test fixture. Specifically, the Commission proposes a surface finish of 1.6 Ra (roughness average), which is a common ''smooth'' specification and is practical to achieve. Both of these additional requirements—the recommended rate and the recommended surface finish—should further reduce the risk of suffocation by improving a test laboratory's ability to identify crib bumpers that would fail the thickness test.

2. *Crib Bumper Firmness.* The F1917–12 maximum thickness requirement for crib bumpers is intended to address the suffocation hazard by eliminating ''soft'' pillow-like crib bumpers. However, thickness is not the same as softness, and the ability of a surface to conform around a child's face is an important indicator of suffocation hazards. Currently, one could make a crib bumper that would pass the maximum thickness requirement in ASTM F1917–12, but still would be soft enough to readily conform to an infant's face. In fact, a crib bumper that is especially soft could be thicker than the bumper thickness test fixture and still pass the maximum thickness test because of its very pliable, pillow-like quality. Thus, to further reduce the risk of injury associated with crib bumpers, the Commission proposes to include an additional firmness requirement.

The Commission is proposing a firmness requirement and test method that is based on an Australian/New Zealand standard, AS/NZS 8811.1:2013, *Methods of Testing Infant Products: Part 1: Sleep Surfaces—Test for Firmness,* which is intended to assess the firmness of infant mattresses and other horizontal sleep surfaces for ''excessive compression.'' The test uses a device that consists of a circular disk of a certain size and weight, with an attached ''feeler arm'' that extends over the edge of the disk. The device is placed on the product, which compresses under the device's weight. If the compression is enough to cause the feeler arm to touch the surface of the product, the product fails. The test device was developed based on a device that was used in a German study to objectively measure the softness of mattresses and underlay surfaces as part of a case-control study of SIDS.

The test's failure criteria are intended to identify soft surfaces that pose a three-fold increase in the risk of SIDS. CPSC staff tested crib bumper samples to the ASTM F1917–12 thickness requirement and to the proposed firmness requirement. Staff found that many bumpers that passed the thickness requirement would fail the firmness requirement. Although staff tested a limited number of samples, all bumper samples up to 0.8 inches thickness passed the firmness test, while all bumper samples 1.2 inches or greater failed the test; bumpers 1 inch thick had mixed results. Nevertheless, it is possible that some bumpers greater than 1 inch thick could be firm enough to pass the test, and some bumpers less than 1 inch could be soft enough to fail. One of the samples that failed the firmness test yet passed the F1917 maximum thickness test measured 2.5 inches thick, which is a half-inch thicker than the 2-inch slot that is used to test thickness. Its very pliability, or softness, allowed it to pass the thickness test.

CPSC staff has been working with the ASTM Infant Bedding Subcommittee task group on crib bumper firmness. CPSC staff and members of the task group agree that the proposed firmness requirement and test method would address a worst-case scenario in which the crib bumper separates from the crib

[13] ASTM F1917–12, Section X1.1.

[14] Petition CP 12–2, ''Petition Requesting a Performance Standard to Distinguish and Regulate Hazardous Pillow-Like Crib Bumpers from Non Hazardous Traditional Crib Bumpers Under Sections 7 and 9 of the Consumer Product Safety Act,'' from the Juvenile Products Manufacturers Association (JPMA).

side or otherwise protrudes into the sleep area and gets underneath an infant. In this scenario, the bumper would present a smothering-type suffocation hazard similar to a quilt or other piece of soft bedding that is able to conform to, and occlude, airway openings. CPSC is aware of nonfatal incidents involving bumpers without lower ties or with ties detaching from the bumper, either of which would allow for this scenario. Some reported fatalities have limited or conflicting details about the infant's face relative to the crib bumper, and these incidents might have involved this scenario. In addition, CPSC examination of crib bumper samples found that long continuous bumpers could be mistakenly installed on a crib in ways that would result in a loose fit and possible sagging. The proposed firmness requirement would reduce the risk of injury of bumpers in the event that consumers incorrectly install these products and the product enters the sleep area.

The Commission also concludes that its proposed firmness requirement could improve the safety of crib bumpers by offering some protection against other smothering-type suffocation deaths where the victim's face is forcefully pressed against a bumper to fully or partially occlude external airway openings. Scenarios involving infant wedging or entrapment against a bumper, in general, and infant entrapment between the bumper and another object in the crib in particular, are especially common in the reported fatalities. Some of these incidents involve the face being pressed against the bumper, and a firmness requirement would reduce the risk of injury associated with this scenario, provided the applied pressure was not sufficient to compress and close nostril openings.

The ASTM Infant Bedding subcommittee is preparing a ballot that includes the proposed firmness requirement.

C. Suffocation Hazard and Entrapment Hazard—Crib Bumper Attachment

ASTM F1917–12 requires crib bumpers to be ''capable of being secured at or near all corners and at the midpoints of the long sides of the crib,'' and specifies that bumpers intended for circular cribs must be capable of being secured at intervals not exceeding 26 inches (section 5.4). CPSC has the following concerns with this provision:

- How ''near'' the corners a bumper would need to be to pass the requirement is not clear.
- The intervals specified—from 26 inches for a circular crib to 28 inches corner to corner for the short end of a crib—are large enough to easily allow a bumper to sag or to pull away from the crib side. CPSC is aware of reported fatalities involving bumpers that were sagging, and consumers have reported concerns about poor fit between bumpers and the crib in which they were installed.
- Crib bumpers can meet the requirement when they are not secured or flush at both the top and bottom edges of the bumper. CPSC is aware of reported fatalities and nonfatal incidents in which the victim was entrapped or able to slip beneath the bottom edge of the bumper, and there have been nonfatal incidents involving entrapment behind the bumper (*i.e.,* between the bumper and the crib side). In addition, some consumers have reported concerns about bumpers that did not include ties along the bottom of the bumper.

The Commission is proposing a new performance requirement that would replace the existing F1917 attachment requirements. The proposed requirement would not allow a small head probe to pass between an installed crib bumper and the interior crib side, at any location around the perimeter of the bumper most likely to fail. The small head probe is the same one used in ASTM F963, *Standard Consumer Safety Specification for Toy Safety,* and approximates the 5th percentile head size of an infant 0 to 3 months old.[15] The Commission believes that this alternative attachment requirement and test method will further reduce the risk of injury associated with crib bumpers. Specifically, the proposed requirement could reduce the risks of suffocation and entrapment associated with infants accessing the spaces under and behind installed crib bumpers. The ASTM Infant Bedding subcommittee has formed a Bumper/Liner Attachment task group, which is developing a similar requirement for the F1917 voluntary standard.

D. Entanglement, Choking, and Suffocation Hazards—Crib Bumper Tie/Attachment Means Strength Requirement

Some nonfatal incidents and reported consumer concerns involved parts of the crib bumper (such as the ties, threads, or stitched-on decorative patterns) wrapped around the neck, limb or digit of the child. In addition to entanglement concerns, some incidents involved a child's ingestion of, or choking on, part of the crib bumper, such as a decorative stitched-on pattern or the bumper's filling material. The attachments means separating from the bumper could also pose a suffocation hazard, because this could allow the bumper to fall or sag into the crib.

1. Attachment Means, Decorative Components, and Seams

ASTM F1917–12 includes a strength requirement for crib bumper ties. The ties must withstand a certain amount of force without detaching from the bumper. This requirement addresses the nonfatal incidents and reported consumer concerns involving crib bumper ties separating from bumpers. However, the standard does not define ''ties,'' but rather, ''attachment means.'' Ties are merely one form of attachment means. Thus, the Commission is proposing to revise the strength requirement for bumper ties to apply to all attachment means, rather than just to ties. The ASTM Infant Bedding subcommittee currently is considering an identical change to the F1917 standard.

2. Decorative Components and Seams Strength Requirements

In addition, the Commission is proposing to include strength requirements for decorative components and bumper seams so that they too must withstand a certain amount of force without detaching from the bumper. Because decorative components may be subjected to similar stressors as attachment means, the Commission proposes similar strength requirements for both. The proposed seam strength requirement includes a criterion that, after testing, there shall not be an opening that permits insertion of a 0.22-inch diameter rod. This diameter is based on the finger entrapment probe that is employed in many children's product tests.

ASTM F1917–12 specifies certain dimensional limits (*e.g.,* measured lengths or perimeters) for attachment means (section 5.1) and decorative components (5.2). However, the current language would pass crib bumpers that include components that exceed these limits after having been subjected to the strength testing, which could present entanglement and choking hazards. The Commission proposes to require crib bumpers to meet these dimensional limits both before and after strength testing.

[15] This probe, which is used to test for hazardous loops and cords, is based on the 5th percentile head length and breadth dimensions of an infant 0 to 3 months old (ASTM F963–03, Section A5.7.13).

E. Suffocation, Entanglement and Fall Hazards—Crib Bumper Warnings and Instructions

ASTM F1917–12 includes marking and labeling requirements—primarily warning requirements—for crib bumpers. However, the Commission concludes that these requirements do not adequately address the risk of injury and death associated with crib bumpers. The current warning content, format, and placement requirements are deficient. Additional requirements, including requirements for warning permanence and instructional literature, would further reduce the risk of injury associated with crib bumpers.

1. Warning Content and Format

The current F1917 warning provides incomplete and insufficient information about steps that consumers can take to reduce the risk of suffocation, and lacks key details about when and why crib bumpers should be removed from the crib. For example, CPSC is aware of reported fatalities involving entrapments between the bumper and another object in the crib, use of the bumper outside a crib (*e.g.,* in a toddler bed or bassinet), and use of the bumper in a broken crib. The current warning requirement does not address these use patterns. CPSC also is aware of nonfatal incidents involving climbing or climb-outs, which the current warning requirement does not address explicitly. The Commission seeks comment on whether incidents of climbing or climb-out have resulted from a crib bumper or liner installed in a crib.

In addition, the specified labeling and warning-format requirements are not consistent with the recommendations of the ASTM Ad Hoc Language task group. ASTM juvenile products standards have begun adopting these ''Ad Hoc'' recommendations since 2016 to increase the consistency of on-product warning design among juvenile products, and to address numerous warning format issues related to capturing consumer attention, improving readability, and increasing hazard perception and avoidance behavior.

On the basis of the issues identified above, the Commission proposes to replace the ASTM F1917–12 warning requirements to produce the following warning, in terms of content and general format:

⚠WARNING

To reduce the risk of **SUFFOCATION**:

- **Keep tight against side of crib.** Do not use if product is loose or sags down toward sleeping surface.
- **Never put pillows or anything else in crib** that could trap baby against this product.
- **Only use in a crib without broken parts or missing slats.** This product will not fix a broken crib or prevent baby from falling out. **Never use in a toddler bed or bassinet.**

To help prevent **ENTANGLEMENT** or **STRANGULATION**, position ties to outside of crib and secure tightly.

Remove this product when baby can pull to a stand using crib side (starting about 6 months). Older babies can use product to climb out of crib.

Because crib bumper ties or other attachment means up to 7 inches long do not pose a strangulation hazard, the Commission proposes requiring the warning statement about entanglement and strangulation only for those bumpers with attachment means exceeding 7 inches in length.[16] The Commission seeks comment on whether to require the last two sentences about removal of the product and climbing out.

a. Warning Placement

ASTM F1917–12 requires the warnings for crib bumpers to be ''conspicuous,'' but does not define this term. Numerous ASTM juvenile product standards require warnings to be ''conspicuous,'' and they define this term in a way that enables one to assess conformance, typically by stating when the warning must be visible. Thus, to clarify the required placement of the warning on the product, the proposed rule includes a definition of ''conspicuous'' that is consistent with the definition used in many other ASTM juvenile product standards.

b. Warning Permanence

ASTM F1917–12 requires the warnings for crib bumpers to be ''permanent''; however, the standard neither defines ''permanent'' nor specifies how one would assess conformance to this requirement. Thus, the proposed rule includes requirements for warning permanence that are consistent with similar requirements in other ASTM juvenile products standards. The Commission proposes to require that warnings that are attached to the fabric with seams must remain in contact around the entire perimeter of the warning. This requirement is intended to avoid so called ''free-hanging'' labels, which can be removed easily.

c. Additional Crib Bumper Markings

The proposed rule would require permanent markings on the crib bumper that indicate which portions of the bumper are intended for the long and short sides of the crib, except for those crib bumpers intended for circular cribs. This proposed requirement would reduce the likelihood of consumers

[16] ASTM F1917–12 specifies that bumper ties cannot be longer than 9 inches, and staff recommends that the proposed rule apply this limit to all attachment means.

installing the bumper incorrectly, and thus will reduce the potential for loose or sagging bumpers. CPSC is aware of fatal incidents involving sagging bumpers, and consumers have reported concerns about installation difficulties and poor bumper fit.

d. Instructional Literature

ASTM F1917–12 does not include requirements for instructional literature to accompany crib bumpers. Numerous ASTM juvenile product standards require manufacturers to provide instructions with the product. Given the importance of proper bumper installation, the Commission concludes that instructional literature regarding installation is essential to adequately address the risk of injury and death associated with bumpers. In addition, the ASTM Ad Hoc Language task group has published recommended requirements for instructional literature and for the formatting of warnings in instructional literature. Thus, the proposed rule includes requirements for instructional literature, largely based on the Ad Hoc Language recommended requirements.

F. Commission Direction Pertaining to Crib Bumpers

In the FY 2017 Operating Plan, the Commission stated that in developing a proposed standard, CPSC staff shall, at a minimum:

- ''Develop a performance requirement and test method to show that a crib bumper is firm enough not to conform to the face of an infant, based on known anthropometric parameters;''
- ''develop a performance requirement and test method based on known infant inhalation and exhalation requirements and anthropometric parameters to demonstrate that a crib bumper matches or exceeds the airflow characteristics of mesh or mesh-like materials, taking into account the safety of infants with compromised breathing;'' and
- ''compose warnings and instructions on the product that explain all of the types of cribs on which the product can and cannot be installed, clear advice about how to install the product and at what age of the child to stop using the product.''

1. Firmness

CPSC staff performed work to develop an anthropometry-based probe. However, the rigidity of the probe's cone-shaped protrusion does not necessarily represent the highly flexible cartilage in young infants' noses, and therefore, might not account for the potential of the nose to compress and close the nostrils when pressure is applied. In addition, in performing preliminary testing of crib bumper samples using the anthropometry-based probe, staff was unable to establish a clear pass-fall criterion. As a result, staff is uncertain whether the probe would accurately measure or relate to the risk of suffocation. Consequently, staff's recommended firmness is not based on anthropometric parameters. Thus, the Commission is proposing adding a firmness requirement to ASTM's requirements, but the proposed requirement is not based on anthropometric parameters.

2. Airflow

The current ASTM voluntary standard for crib bumpers does not include an airflow-related performance requirement. CPSC staff developed a test method for assessing the airflow of crib bumpers that is based on British standard BS 4578:1970, *Specification for Methods of Test for Hardness of, and for Air Flow Through, Infants' Pillows,* and British standard BS 1877–8:1974, *Specification for Domestic bedding—Part 8: Pillows and bolsters for domestic use (excluding cellular rubber pillows and bolsters*). Staff modified the test method to use a ''breathing'' rate that is physiologically representative of a sleeping 3-month old infant by using a 2 L/min airflow. Although staff's test could be used to distinguish mesh liners from most padded crib bumpers, as discussed more fully in the briefing package, CPSC staff was unable to conclude that the requirement would reduce the risk of injury associated with crib bumpers. Thus, CPSC staff did not recommend an airflow requirement for crib bumpers.

However, on January 22, 2020, the Commission held an all-day public hearing regarding the draft NPR and the risks associated with crib bumpers. At the hearing, the Commission heard testimony that millions of mesh crib liners have been sold over almost two decades without known associated fatalities. Moreover, CPSC staff has identified at least four infant deaths where the victim's face was reported to be in contact with a bumper, and determined that the death likely could have been prevented had the bumper been replaced with a mesh liner or vertical bumper. Given the testimony submitted at the January 2020 hearing about the lack of fatalities associated with mesh crib liners and the fact that airflow tests can differentiate mesh from traditional padded bumpers, the Commission is proposing an airflow performance requirement and test method based on *British Standard BS 4578:1970, Specification for Methods of Test for Hardness of, and for Air Flow Through, Infants' Pillows,* with modifications. The Commission believes this additional requirement will further reduce the risk of injury associated with crib bumpers. The Commission seeks comment on whether alternative test methods, such as *ASTM D737–18, Standard Test Method for Air Permeability of Textile Fabrics,* can be correlated with results from the British Standard, as modified, and whether adopting an alternative test method offers benefits.

3. Warnings and Instructions

CPSC staff addressed the Commission's request related to warnings and instructions by recommending the following revisions to ASTM F1917–12 for the proposed rule in the staff briefing package:

- New warning statements about only using crib bumpers in unbroken, full-size cribs, and not using bumpers in toddler beds or bassinets;
- More explicit descriptions of how the bumper should fit when properly installed; and
- More details about when and why consumers should remove crib bumpers from a crib.

As discussed in Section VII.E of this preamble, the proposed rule includes these modifications to ASTM F1917–12.

VIII. Proposed Standard for Crib Bumpers

The Commission proposes to incorporate by reference ASTM F1917–12, *Standard Consumer Safety Performance Specification for Infant Bedding and Related Accessories,* with modifications that would further reduce the risk of injury or death associated with crib bumpers. The proposed modifications are discussed in detail in the Section VII of this preamble and are summarized below:

- Add a ''crib bumper/liner'' definition.
- Revise the crib bumper thickness requirement to apply to all crib bumpers and liners, and revise the test method by adding a minimum rate at which the bumper must pass through the test fixture and a surface finish requirement of 1.6 Ra for the text fixture.
- Add a crib bumper firmness requirement and test method.
- Add a crib bumper airflow requirement and test method.
- Replace the existing requirement for crib bumpers to be capable of being secured at certain locations with a new crib bumper attachment requirement and test method.

• Revise the strength requirement for crib bumper ties to apply to all attachment means, and add new strength requirements and test methods for decorative components and seams.

• Revise the crib bumper warning content, format, and placement requirements; add warning permanence requirements and test methods; and add a requirement for additional crib bumper markings.

• Add crib bumper instructional literature requirements.

Vertical Bumpers

At the hearing in January 2020, the Commission heard testimony that vertical bumpers, or slat covers, have been sold since 2008 without fatalities and have been used by consumers caring for children with special needs. Furthermore, vertical bumpers have been exempted from some state regulations addressing crib bumpers. Consequently, the Commission also seeks comment on reports of any incidents or injuries associated with vertical bumpers; the recommended user population, market size and expected, useful lifespan of vertical bumpers; what design characteristics of vertical bumpers are critical for safety, such as shape, thickness, fill materials, and attachment means; whether there are any requirements in this proposal from which vertical bumpers should be exempt and why; and whether any test methods need to be modified for testing vertical bumpers.

IX. Proposed Amendment to 16 CFR Part 1112 To Include NOR for Bumpers

The CPSA establishes certain requirements for product certification and testing. Products subject to a consumer product safety rule under the CPSA, or to a similar rule, ban, standard or regulation under any other act enforced by the Commission, must be certified as complying with all applicable CPSC-enforced requirements. 15 U.S.C. 2063(a). Certification of children's products subject to a children's product safety rule must be based on testing conducted by a CPSC-accepted third party conformity assessment body. *Id.* 2063(a)(2). The Commission must publish an NOR for the accreditation of third party conformity assessment bodies to assess conformity with a children's product safety rule to which a children's product is subject. *Id.* 2063(a)(3). Thus, the proposed rule for 16 CFR part 1240, *Safety Standard for Crib Bumpers/Liners,* if issued as a final rule, would be a children's product safety rule that requires the issuance of an NOR.

The Commission published a final rule, *Requirements Pertaining to Third Party Conformity Assessment Bodies,* 78 FR 15836 (March 12, 2013), codified at 16 CFR part 1112 (''part 1112'') and effective on June 10, 2013, which establishes requirements for accreditation of third party conformity assessment bodies to test for conformity with a children's product safety rule in accordance with section 14(a)(2) of the CPSA. Part 1112 also codifies all of the NORs the Commission issued previously.

All new NORs for new children's product safety rules, such as the crib bumper/liner standard, require an amendment to part 1112. To meet the requirement that the Commission issue an NOR for the crib bumper/liner standard, as part of this NPR, the Commission proposes to amend the existing rule that codifies the list of all NORs issued by the Commission to add crib bumpers/liners to the list of children's product safety rules for which the CPSC has issued an NOR.

Test laboratories applying for acceptance as a CPSC-accepted third party conformity assessment body to test to the new standard for crib bumpers/liners would be required to meet the third party conformity assessment body accreditation requirements in part 1112. When a laboratory meets the requirements as a CPSC-accepted third party conformity assessment body, the laboratory can apply to the CPSC to have 16 CFR part 1240, *Safety Standard for Crib Bumpers/Liners,* included in the laboratory's scope of accreditation of CPSC safety rules listed for the laboratory on the CPSC website at: *www.cpsc.gov/labsearch*.

X. Proposed Amendment to Definitions in Consumer Registration Rule

The statutory definition of ''durable infant or toddler product'' in section 104(f) applies to all of section 104 of the CPSIA. In addition to requiring the Commission to issue safety standards for durable infant or toddler products, section 104 of the CPSIA also directs the Commission to issue a rule requiring that manufacturers of durable infant or toddler products establish a program for consumer registration of those products. 15 U.S.C. 2056a(d).

Section 104(f) of the CPSIA defines the term ''durable infant or toddler product'' as ''a durable product intended for use, or that may be reasonably expected to be used, by children under the age of 5 years''; and lists examples of 12 such product categories. The examples do not include crib bumpers.

(f) DEFINITION OF DURABLE INFANT OR TODDLER PRODUCT. As used in this section, the term ''durable infant or toddler product''—

(1) means a durable product intended for use, or that may be reasonably expected to be used, by children under the age of 5 years; and

(2) includes—

(A) full-size cribs and non-full-size cribs;

(B) toddler beds;

(C) high chairs, booster chairs, and hook-on-chairs;

(D) bath seats;

(E) gates and other enclosures for confining a child;

(F) play yards;

(G) stationary activity centers;

(H) infant carriers;

(I) strollers;

(J) walkers;

(K) swings; and

(L) bassinets and cradles.

Id. 2056a(f).

In 2009, the Commission issued a rule implementing the consumer registration requirement. 16 CFR part 1130. As the CPSIA directs, the consumer registration rule requires each manufacturer of a durable infant or toddler product to: Provide a postage-paid consumer registration form with each product; keep records of consumers who register their products with the manufacturer; and permanently place the manufacturer's name and certain other identifying information on the product. When the Commission issued the consumer registration rule, the Commission identified six additional products as ''durable infant or toddler products'':

• Children's folding chairs;
• changing tables;
• infant bouncers;
• infant bathtubs;
• bed rails; and
• infant slings.

16 CFR 1130.2. The Commission stated that the specified statutory categories were not exclusive, but that the Commission should explicitly identify the product categories that are covered. The preamble to the 2009 final consumer registration rule states: ''Because the statute has a broad definition of a durable infant or toddler product but also includes 12 specific product categories, additional items can and should be included in the definition, but should also be specifically listed in the rule.'' 74 FR 68668, 68669 (Dec. 29, 2009).

On October 19, 2016, the Commission voted to consider crib bumpers to be durable infant or toddler products and directed staff to develop a notice of proposed regulation for crib bumpers

under section 104 of the Consumer Product Safety Improvement Act. In this document, the Commission proposes to amend the definition of ''durable infant or toddler product'' in the consumer registration rule to clarify that crib bumpers fall within the term ''durable infant or toddler product'' as used in the product registration card rule and section 104 of the CPSIA. Crib bumpers are intended for, and reasonably expected to be used by, children under age 5. They are used with cribs, a product the CPSIA identifies as an example of a durable infant or toddler product. Like the other product categories, crib bumpers are covered by voluntary standard.

XI. Incorporation by Reference

The Commission proposes to incorporate by reference ASTM F1917–12, with modifications to the standard, discussed above. The Office of the Federal Register (OFR) has regulations concerning incorporation by reference. 1 CFR part 51. For a proposed rule, agencies must discuss in the preamble of the NPR ways that the materials the agency proposes to incorporate by reference are reasonably available to interested persons or how the agency worked to make the materials reasonably available. In addition, the preamble of the proposed rule must summarize the material. 1 CFR 51.5(a).

In accordance with the OFR's requirements, section VI of this preamble summarizes the provisions of ASTM F1917–12 that the Commission proposes to incorporate by reference. ASTM F1917–12 is copyrighted. By permission of ASTM, the standard can be viewed as a read-only document during the comment period on this NPR, at: *http://www.astm.org/cpsc.htm.* Interested persons may also purchase a copy of ASTM F1917–12 from ASTM International, 100 Bar Harbor Drive, P.O. Box 0700, West Conshohocken, PA 19428; *http://www.astm.org/cpsc.htm.* One may also inspect a copy at CPSC's Division of the Secretariat, U.S. Consumer Product Safety Commission, Room 820, 4330 East West Highway, Bethesda, MD 20814, telephone 301–504–7923.

XII. Effective Date

The Administrative Procedure Act (APA) generally requires that the effective date of a rule be at least 30 days after publication of the final rule. 5 U.S.C. 553(d). The Commission proposes to incorporate by reference ASTM F1917–12, with modifications. To allow time for bumper manufacturers to bring their products into compliance after a final rule is issued, the Commission proposes that the rule would take effect 6 months after publication of the final rule in the **Federal Register**. The rule would apply to products manufactured or imported on or after that date. Barring evidence to the contrary, the Commission generally considers 6 months to be sufficient time for suppliers to come into compliance with a new standard. Six months is also the period that JPMA typically allows for products in its certification program to shift to a new standard once that new standard is published. CPSC invites comments, particularly from small businesses, regarding the amount of time they will need to come into compliance. We also propose a 6-month effective date for the amendments to parts 1112 and 1130.

XIII. Regulatory Flexibility Act

A. Introduction

Under Section 603 of the RFA, if a notice of proposed rulemaking is required, agencies must prepare an initial regulatory flexibility analysis (IRFA) and make it available to the public for comment when the general notice of proposed rulemaking is published, unless the head of the agency certifies that the rule will not have a significant economic impact on a substantial number of small entities. The IRFA must describe the impact of the proposed rule on small entities and identify significant alternatives that could accomplish the statutory objective while minimizing any significant economic impact. Specifically, the IRFA must contain:

- A description of the reasons why action by the agency is being considered;
- a succinct statement of the objectives of, and legal basis for, the proposed rule;
- a description of and, where feasible, an estimate of the number of small entities to which the proposed rule will apply;
- a description of the projected reporting, recordkeeping, and other compliance requirements of the proposed rule, including an estimate of the classes of small entities subject to the requirements and the type of professional skills necessary for the preparation of reports or records; and
- an identification, to the extent possible, of all relevant federal rules which may duplicate, overlap, or conflict with the proposed rule.

B. Market Description

Crib bumpers range in price from $12 to $500, and also are sold in bedding sets, which can range in price from $80 to $1,200. Manufacturers typically produce only a few models with differences in color, art design, cover material, and filling material being the primary identifying factors. Those products at the higher end of the price range typically are decorated with detailed paint or woven art.

C. Objectives and Legal Basis for Proposed Rule

The objective of this proposed rule is to reduce the risk of injury and death associated with crib bumpers. CPSC staff identified 113 fatalities from 1990 to March 2019 and 113 nonfatal incidents from 2008 to 2019 associated with crib bumpers.

The legal basis of the proposed rule is Section 104 of the CPSIA, which requires the CPSC to examine and assess the effectiveness of any voluntary consumer product safety standards for durable infant or toddler products, and promulgate consumer product safety standards that are substantially the same as the voluntary standards or more stringent than the voluntary standards, if the Commission determines that more stringent requirements would further reduce the risk of injury associated with the products.

D. Crib Bumpers in Use

Based on information from the 2013 CPSC Durable Nursery Products Exposure Survey of U.S. households with children under 6 years old:

- An estimated 9.2 million cribs were in use in households with young children in 2013. This represented about 73 percent of the estimated 12.6 million total cribs owned by households (*i.e.,* about 3.4 million cribs were owned, but not in use).
- Among the 9.2 million cribs in use, an estimated 5.3 million were equipped with bumpers. This represents about 55 percent of the 9.9 million total bumpers owned by households (*i.e.,* about 4.5 million bumpers were owned, but not in use).

In addition to the products in use in households with young children, as estimated from the survey, cribs and bumpers are probably in use in some households without young children (*e.g.,* unsurveyed homes of older adults providing care for grandchildren). Additionally, the survey did not cover child care facilities. One childcare industry group's 2018 directory lists more than 115,000 licensed childcare centers and more than 137,000 home daycare providers, some of which may use cribs and bumpers. Furthermore, the survey did not cover hotels or other commercial lodging establishments. The U.S. Bureau of Labor Statistics (BLS)

reports that there are about 70,000 lodging establishments in the accommodation industry sector, North American Industry Classification System (NAICS) code 721. Based on the Commission's contacts with childcare and lodging facilities, bumper usage in such establishments is probably low.

E. Small Entities to Which the Proposed Rule Would Apply

Manufacturers of crib bumpers are typically categorized under the NAICS category 314120 (Curtain and Linen Mills) but may also fall under code 314999 (All Other Miscellaneous Textile Product Mills). Curtain and linen mills are considered small if they have fewer than 750 employees; miscellaneous textile product mills are considered small if they have fewer than 500 employees.[17] Importers of crib bumpers are typically categorized under NAICS code 423220 (Home Furnishing Merchant Wholesalers) and would be considered small if they have fewer than 100 employees.

Aside from small handcrafters selling products on electronic commerce websites, staff identified 46 manufacturers, distributors and importers. A total of 33 of these 46 firms meet the SBA criteria for small businesses.[18] [19] [20] A majority of the 46 firms have under 25 employees with 8 firms meeting the criteria of a large firm. Most of the firms are domestic manufacturers (28), with domestic importers (7) and domestic distributors (6) accounting for a small minority. The lowest annual revenue among the 46 manufacturers, distributors, and importers was $135,000.

A large number of producers supply crib bumpers to the U.S. market via electronic commerce websites such as Etsy. CPSC staff has identified 174 of these firms of which 86 are importers.[21] [22] CPSC staff considered these firms as small manufacturers/importers because many are one-person firms providing handcrafted nursery products with large varieties in materials and designs. These firms would be considered small by SBA size standards. The revenues for 81 of the small importers is most likely below $25,000 based estimates from the Nonemployer Statistics from the U.S. Bureau of the Census. Of the five remaining small importers, one has annual revenue between $25,000 and $250,000 and the revenue of the other four is between $250,000 and $500,000.

F. Requirements of the Proposed Rule

The proposed rule would incorporate by reference ASTM F1917–12 with modifications that CPSC believes may further reduce the risk of injury. The proposed rule would also make some changes to the definitions and terminology used in the standard to better clarify the requirements. If promulgated by the Commission, the proposed rule would, among other things:

- Establish a crib bumper firmness test that is partly adopted from the Australian/New Zealand Standard (AS/NZS 8811.1) for testing infant products. The test involves using a test fixture to measure firmness of the crib bumper at multiple points along its length.
- Establish maximum lengths for the attachments means and decorative components on bumper pads;
- Establish that the requirements for the length of attachment means and decorative components shall apply both before and after testing;
- Prohibit the use of monofilament thread;
- Establish a minimum thickness for accessible, unsupported vinyl material;
- Establish a test for limiting the maximum thickness of all crib bumpers;
- Establish a crib bumper airflow requirement and test method;
- Establish minimum strength requirements for attachment means and decorative components;
- Establish a strength requirement for bumper seams;
- Require crib bumpers to have labels identifying the manufacturer, distributor, or seller;
- Establish requirements for appropriate warning labels on crib bumpers;
- Establish requirements for the permanence of the warning labels;
- Require instructional literature to be provided with crib bumpers detailing the proper installation methods and the hazards associated with the crib bumpers;
- Establish a test to ensure the bumper remains securely attached to the crib side. The test involves inserting a probe between the crib bumper and the crib slat.

In addition to the requirements outlined above, the proposed rule would modify or clarify some of the terms and definitions used in ASTM F1917–12. For example, the proposed rule would consistently refer to ''crib bumpers/liners'' and not ''bumper pads,'' ''bumper guards,'' and similar terms that are sometimes used in ASTM F1917– 2. The proposed rule would also clarify the definitions of terms such as ''crib bumper/liner,'' and ''conspicuous.''

G. Impact of Proposed Rule on Small Manufacturers

If the proposal is finalized, manufacturers and importers of crib bumpers would be responsible for ensuring that their products comply with the rule. If their crib bumpers do not comply with the requirements, the manufacturers or importers will need to either modify the products or cease their manufacture or importation. Additionally, as required by section 14 of the CPSIA and its implementing regulations, manufacturers and importers of crib bumpers would be required to certify that their crib bumpers comply with the requirements of the proposed rule based on the results of third party testing by an accredited conformity assessment body.

In 2018, CPSC collected a sample of crib bumpers to test them for compliance with the proposed rule. Although not a probability sample, CPSC tried to collect a wide variety of crib bumpers that included most types of crib bumpers that are available in the market place, including crib bumpers from the very small manufacturers or hand crafters. Although most of these crib bumpers would comply with many of the provisions of the proposed rule, the testing found that most models (7 out of 11 models tested) would not pass the proposed firmness test. Additionally, many models would need to modify their warning labels' content, placement, and formatting to comply with the proposed rule. An air flow requirement that differentiates mesh liners from padded crib bumpers could effectively result in removing most padded crib bumpers from the market. The total size of the impact is dependent on the padded crib bumper product(s) share of revenue or consumer preferences. Staff identified one firm whose sole product is a crib bumper but it is unclear if this product would meet an air flow requirement due to its design. Some manufacturers of padded crib bumpers may be able to remove the padding or change the design of their products to meet the requirement.

[17] The size guidelines are established by the U.S. Small Business Administration (SBA).

[18] Based on size and revenue data from Reference USA and firm financial reports, websites, and press releases.

[19] The Commission could not determine the status of five firms, but they are most likely small.

[20] Eleven of the forty-six firms identified supply mesh liner or similar mesh type products.

[21] Based on a review of electronic commerce websites that specialize in handmade products.

[22] Approximately 90 percent of these small handcrafters provide traditional crib bumpers with mesh liner handcrafters accounting for only 4.6 percent.

H. Costs Associated With Modifying Products To Comply With the Proposed Rule

Modifying most types of crib bumper designs to conform to the firmness requirement could be as simple as removing some of the filling material used in the bumper pad or using additional stitching to compact the loose fill material. The cost of making such modifications should not be significant. However, the braided type of crib bumper would likely fail the firmness requirement because the results depended upon where on the product it was tested. It is unclear if braided bumpers could be modified to meet this requirement. Moreover, the braided crib bumpers CPSC examined did not have any means by which they could be attached to the crib, which is also a requirement of the proposed rule.[23] This implies that the proposed rule may result in the removal of braided crib bumpers from commerce. All firms identified as supplying braided bumpers are importers and not domestic manufacturers and represent approximately 6 percent of the identified importers.[24] An airflow requirement that differentiates mesh liners from padded crib bumpers could effectively result in removing most padded crib bumpers from the market. Some manufacturers of padded crib bumpers may be able to remove the padding or change the design of their products to meet the requirement.

Generally, the costs associated with providing instructional materials are low on a per unit basis. Many firms already provide instructions with their products, but they may have to change the content or formatting of the instructions to comply. Likewise, the cost of warning labels are generally low, especially if some warning labels are already present and the product itself does not have to be modified to accommodate new labels.

I. Third Party Testing Costs

The proposed rule would require all manufacturers and importers of crib bumpers to meet third party testing requirements under section 14 of the CPSA and 16 CFR part 1107.[25] The Commission estimates that testing costs associated with testing to ASTM F1917–12 would be between $750 and $1,250 per sample tested.[26] As the average number of crib bumper models per firm is two, this equates to a cost of at least $1,500 to $2,500 per firm, if no more than one sample per model to provide the required ''high degree of assurance'' that the model complies with the requirements. Under 16 CFR part 1107, manufacturers and importers will need to recertify their crib bumpers at least annually, unless the firm has also established a formal reasonable testing program, in which case they will have to recertify their crib bumpers at least every two years. Currently 21 of 207 small crib bumper manufacturers and importers are members of the JPMA, but it is unclear if any crib bumpers are certified to ASTM F1917–12. However, some of these firms produce other products that are already subject to other children's product safety rules and, therefore, familiar with these requirements. Many of the small firms that are not members of JPMA or that do not produce other products subject to children's product safety rules may be unfamiliar with the third party testing requirements.

As noted, for a typical manufacturer or importer with two crib bumper models, the cost of third party testing will be at least $1,500 to $2,500 to test and certify both models and this cost will be incurred at least once every other year. Generally, we consider impacts that exceed one percent of revenue to be potentially significant. As discussed above there are a substantial number of very small firms that either hand craft or import crib bumpers that are often sold through websites, such as Etsy.com, and more than three quarters of these very small firms are estimated to have annual revenues of less than $25,000. Even if these firms needed to test only one sample of each crib bumper to obtain the ''high degree assurance'' that the product would meet all the requirements of the rule, the cost of the third party testing would be at least 5 percent of one year's revenue and possibly more if their revenue was much less than $25,000. This impact would be significant. Many of these firms could be expected to stop supplying crib bumpers to the U.S. market because they are not able to increase their prices to cover the testing costs.

The cost of the third party testing associated with the proposed rule could also be significant for small firms that are not among the very small firms discussed above. CPSC identified 13 small manufacturers and one importer of crib bumpers that have annual revenues between $25,000 and $250,000. If the third party testing costs are between $1,500 and 2,500, the cost could exceed one percent of the annual revenue of several of these firms as well and could be considered significant.

J. Summary of Impact on Small Manufacturers and Importers

Because a majority of crib bumper firms supply padded crib bumpers, the air flow requirement could have an impact on a substantial number of small firms if they are unable to modify their products.[27] Staff identified a total of 207 small manufacturers and importers that an air flow requirement could impact. The size of the impact would depend upon factors such as the cost to modify the products, the importance of padded crib bumpers to the firm in terms of revenue, or consumer preference for a padded crib bumper over a thin mesh liner. Nearly all firms supplying the U.S. market with crib bumpers also supply other infant products including, but not limited to crib mattresses, crib sheets, and blankets.[28] CPSC expects that most crib bumpers currently on the market would comply with the other requirements of the proposed rule or could comply with minimal cost and effort by making modifications, such as modifying the language in the instructional material that already comes with the products, removing loose fill material and or using additional stitching. However, braided bumpers would likely fail the test requirements in the proposed rule and would be removed from the market. This could significantly impact the firms that supply braided crib bumpers. As noted above, the cost of the third party testing that manufacturers and importers would require in order to certify compliance with the rule could be significant for a substantial number of small firms as the third party testing costs could easily exceed one percent of annual revenues for many of the small suppliers. For small handcrafter firms that offer crib bumpers through channels such as Etsy.com the third party testing costs will likely exceed 5 percent of their total annual revenue.

[23] Some braided crib bumper manufacturers have begun modifying their product to include a means to attach the product to the side of a crib as of May 2019.

[24] Currently total annual revenue and unit sales of braided bumpers is unknown but total annual revenue is expected to be under $150,000 as braided bumper importers appear to be firms with 1 to 2 employees.

[25] Third party testing will include any physical and mechanical test requirements specified in the final crib bumper rule.

[26] Based on quotes from testing laboratories that currently test children's products to ASTM standards.

[27] Approximately 90 percent of small handcrafter firms provide traditional padded bumpers.

[28] Staff identified one firm that only produces crib bumper products.

K. Other Federal Rules Which May Duplicate, Overlap, or Conflict With the Proposed Rule

CPSC has not identified any other federal rules that duplicate, overlap, or conflict with the proposed rule.

L. Alternatives Considered To Reduce the Impact on Small Entities

1. *Adopt ASTM F1917–12 Without Modification.* The Commission could propose to incorporate by reference ASTM F1917–12 without any modifications and direct staff to work with ASTM to improve warning labels, test methods, and the firmness of crib bumpers in a future revision of the voluntary standard. This alternative could reduce the impact of the rule on small businesses, but the reduction would not be expected to be very significant. As discussed in the analysis above, modifying crib bumpers to comply with the firmness requirement could be accomplished by reducing the amount of filler material or by incorporating additional stitching to compress the material. These modifications are not expected to be costly. Likewise the costs to modify or add warning labels or instructional material are expected to be low. The most significant impacts of the proposed rule would be associated with the third party testing requirements under section 14 of the CPSA and 16 CFR part 1107, which would be required once the proposed rule became a mandatory children's product safety rule. These costs, however, would be largely unaffected by this alternative.

2. *Small Batch Exemption.* Given the number of small crib bumper manufacturers using websites like Etsy, exempting small batch manufacturers from the testing requirements proposed under the rule might seem to be an alternative. However, under Section 14(d)(4)(C)(ii) of the CPSA, the Commission cannot ''provide any alternative requirements or exemption'' from third party testing for ''durable infant or toddler products,'' as defined in section 104(f) of the CPSIA. Consequently, the Commission is not proposing a small batch exemption.

3. *Reduce the Frequency of Periodic Testing for Very Small Crib Bumper Manufacturers.* The Commission could amend 16 CFR part 1107 to reduce the frequency of periodic testing for small home-based businesses that produce crib bumpers. Currently, under the requirements of 16 CFR 1107.21, these firms need to conduct periodic third party tests every year, or, if they have a formal production testing plan, every 2 years. The testing costs associated with third party periodic testing could be substantially reduced if the Commission amended existing regulations to allow small home-based producers of crib bumpers to conduct periodic testing less frequently. One alternative for manufacturers with established production testing plans, would be to require third party periodic testing only after a certain number of units of a product (to be determined at a later time) had been produced, even if it meant that periodic third party tests would be conducted less frequently than every 2 years. The details of this alternative would be determined by the Commission; it might apply to all nursery products, or it might be limited to crib bumpers. However, all home-based firms would still be required to: (1) Produce conforming products; (2) conduct the initial certification tests (16 CFR 1107.20); (3) re-certify whenever there is a material change to the product (16 CFR 1107.23); and (4) implement a production testing plan and conduct on going production tests (16 CFR 1107.21(c)).

4. *Delay the Effective Date of the Requirements.* Typically, the Commission recommends an effective date of 6 months for durable nursery product rules. Six months is generally considered sufficient time for suppliers to come into compliance with a proposed durable infant and toddler product rule, unless there are specific reasons for a longer effective date. One alternative that could reduce the impact on small firms would be to set an effective date of 12 months. A later effective date could mitigate the effects of the rule on small businesses by delaying the need to conduct third party certification tests and allowing the businesses to spread the costs of bringing their crib bumpers into conformance over a longer period of time. For businesses that would choose to exit the crib bumper market (rather than produce conforming products), such a delay might also provide them with more time to adjust marketing towards other product offerings, sell inventory or consider alternative business opportunities.

5. *Not Issue a Mandatory Standard.* Another option available to the Commission that would reduce the burden on small firms is to not adopt a mandatory standard for crib bumpers. This would eliminate the cost impacts described in the previous sections, including those associated with third party testing, and allow the small handcrafter firms to continue operations.

M. Impacts of Test Laboratory Accreditation Requirements on Small Laboratories

In accordance with section 14 of the CPSA, all children's products that are subject to a children's product safety rule must be tested by a third party conformity assessment body that has been accredited by CPSC. These third party conformity assessment bodies test products for compliance with applicable children's product safety rules. Testing laboratories that want to conduct this testing must meet the NOR for third party conformity testing. CPSC has codified NORs in 16 CFR part 1112. The Commission proposes to amend 16 CFR part 1112 to establish an NOR for testing laboratories to test for compliance with the proposed crib bumper standard. This section assesses the impact a proposed amendment would have on small laboratories.

CPSC conducted a final regulatory flexibility analysis (FRFA) when it adopted part 1112. 78 FR 15836 (Mar. 12, 2013). The FRFA concluded that the accreditation requirements would not have a significant adverse impact on a substantial number of small laboratories because no requirements were imposed on laboratories that did not intend to provide third party testing services. The only laboratories CPSC expects to provide such services are laboratories that anticipated receiving sufficient revenue from the mandated testing to justify accepting the requirements as a business decision.

For the same reasons, including the NOR for crib bumpers in part 1112 would not have a significant impact on small laboratories. Moreover, CPSC expects that only a small number of laboratories would request accreditation to test crib bumpers, based on the number of laboratories that have applied for CPSC accreditation to test other juvenile products. Most laboratories would already have accreditation to test for conformance to other juvenile product standards; accordingly, the only cost would be to add the crib bumper standard to their accreditation. Test laboratories have indicated that this cost is extremely low when they are already accredited for other CPSIA section 104 rules. Therefore, the Commission certifies that the NOR for the crib bumper standard will not have a significant impact on a substantial number of small entities.

XIV. Environmental Considerations

The Commission's regulations address whether the agency must prepare an environmental assessment or an environmental impact statement. Under

these regulations, certain categories of CPSC actions normally have ''little or no potential for affecting the human environment,'' and therefore, do not require an environmental assessment or an environmental impact statement. Safety standards providing requirements for products come under this categorical exclusion. 16 CFR 1021.5(c)(1). The proposed rule falls within the categorical exclusion.

XV. Paperwork Reduction Act

This proposed rule contains information collection requirements that are subject to public comment and review by the Office of Management and Budget (OMB) under the Paperwork Reduction Act of 1995 (44 U.S.C. 3501–3521). In this document, pursuant to 44 U.S.C. 3507(a)(1)(D), we set forth:

- A title for the collection of information;
- a summary of the collection of information;
- a brief description of the need for the information and the proposed use of the information;
- a description of the likely respondents and proposed frequency of response to the collection of information;
- an estimate of the burden that shall result from the collection of information; and
- notice that comments may be submitted to the OMB.

Title: Safety Standard for Crib Bumpers/Liners.

Description: The proposed rule would require crib bumpers/liners to comply with ASTM F1917–12, *Standard Consumer Safety Performance Specification for Infant Bedding and Related Accessories,* with several modifications, including modifications to their existing labels and new requirements for the provision of instructional literature. Section 8 of ASTM F1917–12 contains requirements for marking and labeling. Proposed section 9 contains requirements for instructional literature. These requirements fall within the definition of ''collection of information,'' as defined in 44 U.S.C. 3502(3).

Description of Respondents: Persons who manufacture or import crib bumpers/liners.

Estimated Burden: We estimate the burden of this collection of information as follows:

TABLE 1—ESTIMATED ANNUAL REPORTING BURDEN

Burden type	Number of respondents	Frequency of responses	Total annual responses	Hours per response	Total burden hours
Labeling	220	2	440	1	440
Instructional literature	220	2	8,800	20	8,800
Total Burden					9,240

Our estimate is based on the following:

There are 220 known entities supplying crib bumpers/liners to the U.S. market. All 220 firms are assumed to use labels already on both their products and their packaging, but the firms might need to make some modifications to their existing labels. The estimated time required to make these modifications is about 1 hour per model. Each entity supplies an average of two different models of crib bumper/liner; therefore, the estimated burden associated with labels is 1 hour per model × 220 entities × 2 models per entity = 440 hours. We estimate the hourly compensation for the time required to create and update labels is $34.61 (U.S. Bureau of Labor Statistics, ''Employer Costs for Employee Compensation,'' March 2019, total compensation for all sales and office workers in goods-producing private industries, series id CMU201G000200000D: *http://www.bls.gov/ncs/*). Therefore, the estimated annual cost to industry associated with the labeling requirements is $15,228.20 ($34.61 per hour × 440 hours = $15,228.20). There are no operating, maintenance, or capital costs associated with the collection. The proposed rule would require instructions to be supplied with the product. Under the OMB's regulations (5 CFR 1320.3(b)(2)), the time, effort, and financial resources necessary to comply with a collection of information that would be incurred by persons in the ''normal course of their activities'' are excluded from a burden estimate, where an agency demonstrates that the disclosure activities required to comply are ''usual and customary.'' Crib bumpers/liners require installation on an existing crib, which implies instructions for proper use, fit, position on a crib, and cleaning are necessary. Many of the firms already provide some instructional material, but some modifications to existing material may be necessary, and other firms supply little to no instructional information. Therefore, we have assumed that there will be a burden to all firms of modifying/creating instructional literature in this case. Each entity supplies an average of two different models of crib bumper/liner; therefore, the estimated burden associated with instructional literature is 20 hour per model × 220 entities × 2 models per entity = 8,800 hours. We estimate the hourly compensation for the time required to create and update instructional material is $34.61 (U.S. Bureau of Labor Statistics, ''Employer Costs for Employee Compensation,'' March 2019, total compensation for all sales and office workers in goods-producing private industries, series id CMU201G000200000D: *http://www.bls.gov/ncs/*). Therefore, the estimated annual cost to industry associated with the instructional material requirements is $304,568 ($34.61 per hour × 8,800 hours = $304,568). There are no operating, maintenance, or capital costs associated with the collection. Not all firms would incur these costs every year, but new firms that enter the market would and the market may be highly fluctuating, particularly for small handcrafters.

Based on this analysis, the proposed standard for crib bumpers/liners would impose a burden to industry of 9,240 hours, at an estimated cost of $319,796.40 annually.

In compliance with the Paperwork Reduction Act of 1995 (44 U.S.C. 3507(d)), we have submitted the information collection requirements of this rule to the OMB for review. Interested persons are requested to submit comments regarding information collection by May 4, 2020, to the Office of Information and Regulatory Affairs, OMB (see the **ADDRESSES** section at the beginning of this document).

Pursuant to 44 U.S.C. 3506(c)(2)(A), we invite comments on:

- The estimated burden hours required to modify warning labels;
- the estimated burden hours required to modify instruction manuals;

- whether the collection of information is necessary for the proper performance of the CPSC's functions, including whether the information will have practical utility;
- the accuracy of the CPSC's estimate of the burden of the proposed collection of information, including the validity of the methodology and assumptions used;
- ways to enhance the quality, utility, and clarity of the information to be collected;
- ways to reduce the burden of the collection of information on respondents, including the use of automated collection techniques, when appropriate, and other forms of information technology.

XVI. Preemption

Section 26(a) of the CPSA, 15 U.S.C. 2075(a), provides that when a consumer product safety standard is in effect and applies to a product, no state or political subdivision of a state may either establish or continue in effect a standard or regulation that prescribes requirements for the performance, composition, contents, design, finish, construction, packaging, or labeling of such product dealing with the same risk of injury unless the state requirement is identical to the federal standard. Regulations or laws lacking performance or design requirements enacted by a state or a political subdivision of a state are not subject to this section. Section 26(c) of the CPSA also provides that states or political subdivisions of states may apply to the Commission for an exemption from this preemption under certain circumstances. Section 104(b) of the CPSIA refers to the rules to be issued under that section as ''consumer product safety rules.'' Therefore, the preemption provision of section 26(a) of the CPSA would apply to a rule issued under section 104.

XVII. Request for Comments

This NPR begins a rulemaking proceeding under section 104(b) of the CPSIA to issue a consumer product safety standard for crib bumpers, to amend part 1112 to add crib bumpers to the list of children's product safety rules for which the CPSC has issued an NOR, and to amend part 1130 to identify crib bumpers as a durable infant or toddler product subject to CPSC consumer registration requirements. We invite all interested persons to submit comments on any aspect of this proposal. In addition to requests for specific comments elsewhere in this NPR, the Commission requests comments on the proposed effective date, and the costs of compliance with, and testing to, the proposed crib bumper safety standard. Furthermore, the Commission invites comments on the following:

1. Is the 2 inch maximum thickness requirement and the related test method sufficient?

2. With regard to the firmness requirements and related test methods: Potential facial conformity test devices and methods, such as mechanical test surrogates; recommendations for a more anthropomorphic test method; the repeatability of the proposed firmness test; the validity of the proposed firmness requirements and related test methods.

3. Is an airflow performance requirement based on the airflow characteristics of typical mesh bumpers protective enough to eliminate the risks of suffocation against a crib bumper?

4. What further modifications to the British air flow test method (BS 4568:1970) would enhance the repeatability and validity of the airflow test requirement for crib bumpers?

5. Is there an alternative test method, such as *ASTM D737–18, Standard Test Method for Air Permeability of Textile Fabrics,* that can be correlated with results from the British Standard, as modified, and would adoption of this alternative test method offer benefits?

6. If the Commission adopts an airflow performance requirement, what effect will this have on the need for the proposed thickness and firmness tests and will the proposed warnings and instructions need to be modified?

7. Is there evidence that demonstrates that climb-out rates are higher when crib bumpers or mesh liners are installed in a crib, and should the Commission require the new warnings about removal of the product and climbing out?

8. Does having an airflow performance requirement for crib bumpers adversely affect public education about safe sleep best practices?

9. Is there any research into air permeability, breathability, infants' oxygen and carbon dioxide levels, rebreathing, anatomical features, airway openings, respiratory rates and volumes, anthropometry of facial features such as nasal deformation against crib bumpers, effects of exhaled moisture and saliva on the air permeability of fabric and mesh bumpers, patterns of gas dispersal within a crib, or other related topics that the Commission should consider?

10. Are there reports of incidents or injuries associated with vertical bumpers? What is the recommended user population, market size and expected, useful lifespan of vertical bumpers? What design characteristics of vertical bumpers are critical for safety, such as shape, thickness, fill materials, and attachment means? Are there any requirements in this proposal from which vertical bumpers should be exempt and why? Are there any test methods that need to be modified for testing vertical bumpers?

11. A central purpose of the Consumer Product Safety Act is ''to develop uniform safety standards for consumer products and to minimize conflicting State and local regulations.'' *See* 15 U.S.C. 2051(b)(3). Given this mandate, what should the preemptive effect of any regulation promulgated under this rulemaking be?

12. Should the Commission consider an effective date of 12 months for any regulation promulgated under this rulemaking?

13. Should CPSC consider any other alternatives to reduce the impact on small entities?

14. On October 19, 2016, the Commission voted to initiate rulemaking under section 104 of the Consumer Product Safety Improvement Act (CPSIA) to address the risk of injury or death associated with the use of crib bumpers. Do crib bumpers and liners meet the definition of ''durable product''? What are the anticipated legal challenges to pursuing rulemaking under this authority?

15. Many outside groups have advocated for an outright ban of crib bumpers and liners. Does CPSC have jurisdiction under Section 104 to ban this product category? If not, may CPSC promulgate a rule declaring such products a banned hazardous product under Section 8 of the CPSIA, 15 U.S.C. 2057?

During the comment period, the ASTM F1917–12 *Standard Consumer Safety Performance Specification for Infant Bedding and Related Accessories,* is available as a read-only document at: *http://www.astm.org/cpsc.htm.*

Comments should be submitted in accordance with the instructions in the **ADDRESSES** section at the beginning of this document.

List of Subjects

16 CFR Part 1112

Administrative practice and procedure, Audit, Consumer protection, Reporting and recordkeeping requirements, Third party conformity assessment body.

16 CFR Part 1130

Administrative practice and procedure, Business and industry, Consumer protection, Reporting and recordkeeping requirements.

16 CFR Part 1240

Consumer protection, Imports, Incorporation by reference, Infants and children, Labeling, Law enforcement, and Toys.

For the reasons discussed in the preamble, the Commission proposes to amend 16 CFR Chapter II as follows:

PART 1112—REQUIREMENTS PERTAINING TO THIRD PARTY CONFORMITY ASSESSMENT BODIES

■ 1. The authority citation for part 1112 continues to read as follows:

Authority: 15 U.S.C. 2063; Pub. L. 110–314, section 3, 122 Stat. 3016, 3017 (2008).

■ 2. Amend § 1112.15 by adding paragraph (b)(50) to read as follows:

§ 1112.15 When can a third party conformity assessment body apply for CPSC acceptance for a particular CPSC rule or test method?

* * * * *

(b) * * *

(50) 16 CFR part 1240, Safety Standard for Crib Bumpers/Liners.

* * * * *

PART 1130—REQUIREMENTS FOR CONSUMER REGISTRATION OF DURABLE INFANT OR TODDLER PRODUCTS

■ 3. The authority citation for part 1130 continues to read as follows:

Authority: 15 U.S.C. 2056a, 2065(b).

■ 4. Amend § 1130.2 by adding paragraph (a)(18) to read as follows:

§ 1130.2 Definitions.

* * * * *

(a) * * *

(18) Crib bumpers/liners.

* * * * *

■ 5. Add part 1240 to read as follows:

PART 1240—SAFETY STANDARD FOR CRIB BUMPERS/LINERS

Sec.
1240.1 Scope.
1240.2 Requirements for crib bumpers/liners.

Authority: Sec. 104, Pub. L. 110–314, 122 Stat. 3016 (August 14, 2008); Sec. 3, Pub. L. 112–28, 125 Stat. 273 (August 12, 2011).

§ 1240.1 Scope.

This part establishes a consumer product safety standard for crib bumpers/liners.

§ 1240.2 Requirements for crib bumpers/liners.

(a) Except as provided in paragraph (b) of this section, each crib bumper/liner must comply with all applicable provisions of ASTM F1917–12, *Standard Consumer Safety Performance Specification for Infant Bedding and Related Accessories,* approved on July 1, 2012. The Director of the Federal Register approves this incorporation by reference in accordance with 5 U.S.C. 552(a) and 1 CFR part 51. You may obtain a copy from ASTM International, 100 Bar Harbor Drive, P.O. Box 0700, West Conshohocken, PA 19428; *http://www.astm.org/cpsc.htm.* You may inspect a copy at the Division of the Secretariat, U.S. Consumer Product Safety Commission, Room 820, 4330 East West Highway, Bethesda, MD 20814, telephone 301–504–7923, or at the National Archives and Records Administration (NARA). For information on the availability of this material at NARA, email, *fedreg.legal@nara.gov,* or go to: *https://www.archives.gov/federal-register/cfr/ibr-locations.html.*

(b) Comply with ASTM F1917–12 with the following additions or exclusions:

(1) Instead of complying with section 3.1.1 of ASTM F1917–12, comply with the following:

(i) 3.1.1 *attachment means. n*—flexible ribbons, strings, hook and loop straps, ties, and similar devices attached to a crib bumper/liner for the purpose of attaching to a crib.

(ii) [Reserved]

(2) Instead of complying with section 3.1.4 of ASTM F1917–12, comply with the following:

(i) 3.1.4 *infant bedding and related accessories, n*—includes the following items intended for use in a nursery: Fitted sheets, blankets, dust ruffles, covers and drapes for canopies, pillows, mattress covers, diaper stackers, fabric wall hangings, crib bumpers/liners, and comforters.

(ii) Reserved

(3) In addition to complying with section 3.1.6 of ASTM F1917–12, comply with the following:

(i) 3.1.7 *conspicuous, adj*—visible, when the product is in all manufacturer's recommended use positions, to a person standing near the product at any one position around the product, but not necessarily visible from all positions.

(ii) 3.1.8 *crib bumper/liner, n*—any product intended to be placed against any portion of the interior perimeter of a crib, and that reduces or eliminates an infant's access to the crib sides, slats, spindles, or the spaces between these components.

(iii) 3.1.8.1 *Discussion*—Such products are commonly referred to as crib bumpers, crib liners, mesh liners, bumper pads, bumper guards, and headboard panels, but do not include products intended to cover only the top horizontal rail of a crib.

(4) Instead of complying with section 5.1 of ASTM F1917–12, comply with the following:

(i) 5.1 Attachment means on crib bumpers/liners shall not exceed 9.0 in. (230 mm) both before and after 7.4.1 testing when measured in accordance with 7.1.

(ii) [Reserved]

(5) Instead of complying with section 5.2 of ASTM F1917–12, comply with the following:

(i) 5.2 Decorative components as defined in 3.1.2 shall not exceed 7 in. (180 mm) when measured in accordance with 7.1. If any decorative components can tangle to form a loop, then the perimeter of the loop shall not exceed 14 in. (360 mm) when tested in accordance with 7.1. These requirements shall apply both before and after 7.4.3 testing.

(ii) [Reserved]

(6) Instead of complying with section 5.4 of ASTM F1917–12, comply with the following:

(i) 5.4 *Labeling*—Warning labels (whether paper or non-paper) shall be permanent when tested in accordance with 7.5.

(ii) 5.4.1 Warning statements applied directly onto the surface of the product by hot stamping, heat transfer, printing, wood burning, and so forth shall be permanent when tested in accordance with 7.6.

(iii) 5.4.2 Non-paper labels shall not liberate small parts when tested in accordance with 7.6.

(iv) 5.4.3 Crib bumper/liner warning labels that are attached to the fabric with seams shall remain in contact with the fabric around the entire perimeter of the label, when the product is in all manufacturer-recommended use positions, when tested in accordance with 7.5.3.

(7) Instead of complying with section 6.2 of ASTM F1917–12, comply with the following:

(i) 6.2 *Maximum Crib Bumper/Liner Thickness*—For all crib bumpers/liners, each bumper/liner section shall slide through the crib bumper/liner thickness test fixture (see Fig. 1) over its entire length at a rate no less than 0.5 inch per second when tested in accordance with 7.3. The bumper shall be tested in its pre-washed state and also after three wash/dry cycles performed according to the manufacturer's care instructions.

(ii) Note: Test fixture shall be fabricated from aluminum and have a smooth finish. The test fixture slot and fillet finish shall be 1.6 Ra.

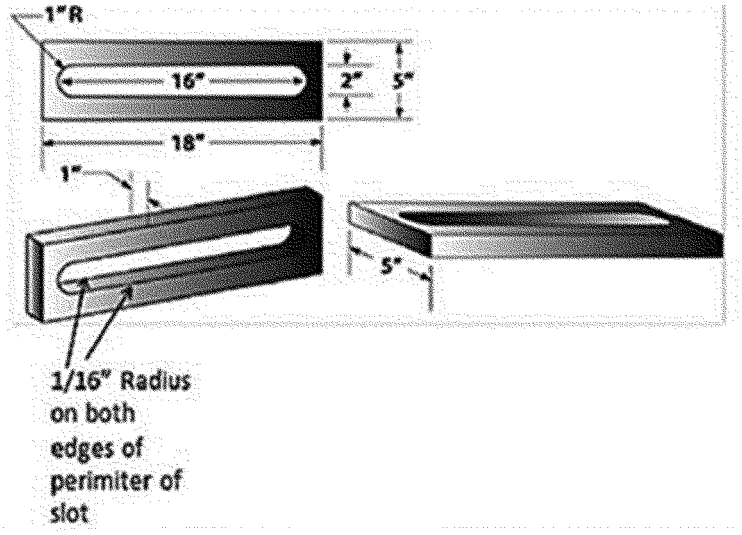

FIG. 1 Crib Bumper/Liner Thickness Test Fixture

(8) Instead of complying with section 6.3 of ASTM F1917–12, comply with the following:

(i) 6.3 *Strength of Crib Bumper/Liner Attachments and Seams*

(ii) 6.3.1 *Attachment Means*—Following the testing specified in 7.4.1, the attachment means for a crib bumper/liner shall not fully detach from the crib bumper/liner. Partial detachment or tearing is allowed.

(iii) 6.3.2 *Seams*—Following the testing specified in 7.4.2, no seam shall have an opening that allows a 0.22-inch diameter steel rod to enter.

(iv) 6.3.3 *Decorative Components*—Following the testing specified in 7.4.3 the decorative component shall not fully detach from the crib bumper/liner. Partial detachment or tearing is allowed.

(v) 6.4 *Crib Bumper/Liner Firmness*—For crib bumpers/liners with an installed thickness of 0.59 in. (15 mm) or greater, no part of the bumper shall contact the feeler arm of the firmness test fixture (see Fig. 2), when tested in accordance with 7.7.

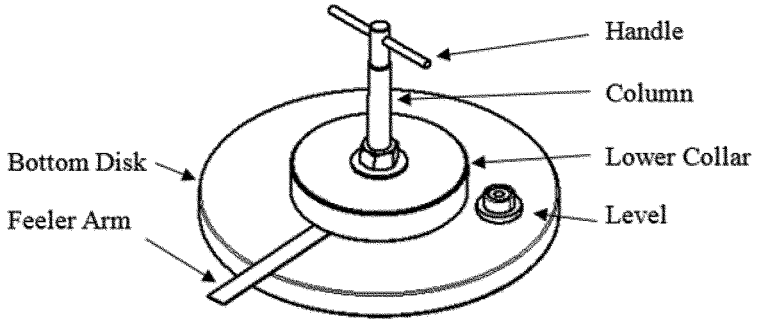

FIG. 2 Firmness Test Fixture

(vi) 6.5 *Crib Bumper/Liner Entrapment in Openings*—When tested in accordance with the head probe test specified in 7.8, no opening shall allow passage of the small head test probe (Fig. 3). Passage is defined as admitting the base of the probe.

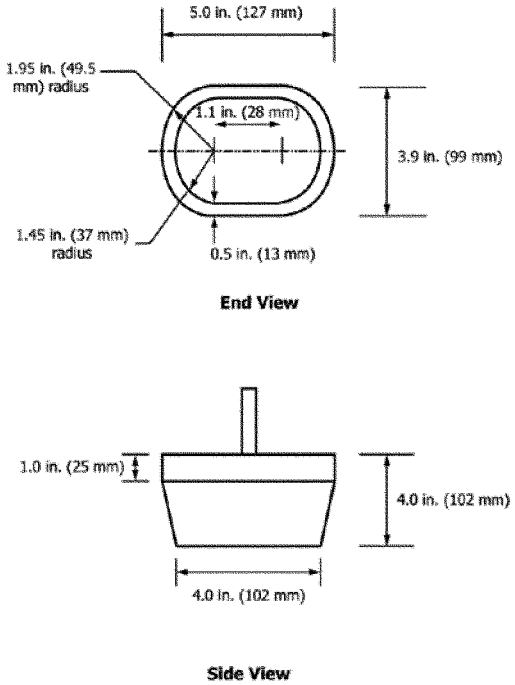

FIG. 3 Head Probe for Entrapment in Openings Testing

(vii) 6.6 *Crib Bumper/Liner Airflow*—When tested in accordance with the airflow test specified in 7.9, no crib bumper/liner shall measure a pressure differential of greater than 0.003 inches (0.076 mm) H_2O.

(9) Instead of complying with section 7.3 of ASTM F1917–12, including Note 1, comply with the following:

(i) 7.3 *Crib Bumper/Liner Thickness Test*—Align the crib bumper/liner thickness test fixture so that the surface of the fixture with the opening is horizontal. Insert a bumper end into the opening so that the bumper end protrudes just beyond the lower surface of the test fixture and attach a 5-lb static weight to the midpoint of the protruding bumper end. Keeping the bumper positioned vertically, allow the weight to slowly draw the bumper through the opening.

Note 1 to paragraph (b)(9)(i). If the attachment means or other localized means provided to secure the bumper to the crib interfere with the bumper sliding through the bumper thickness test fixture, ease the ties or other attachment means through the fixture and then continue the test.

(10) Instead of complying with section 7.4 of ASTM F1917–12, including Note 2, comply with the following:

(i) 7.4 *Crib Bumper/Liner Strength Tests*—Tensile tests of attachment means, decorative components, and seams shall be conducted using clamps as described in 7.4.1, 7.4.2, 7.4.3. The force in each test shall be applied evenly within a period of 5 s, and maintained for additional 10 s. The loading device shall be a self-indicating gauge or other appropriate means having an accuracy of +/−0.5 lb (+/−2 N).

(ii) 7.4.1 *Attachment Means Strength*—Apply a tensile force of 20 lb on the bumper attachment means by clamping the free end in a perpendicular direction away from the attachment point to the bumper.

(iii) 7.4.1.1 Attachment means that share a common attachment point shall be tested together, as if one attachment means.

Note 2 to paragraph (b)(10)(iii). There is no single clamp or method of attachment specified for the crib bumper/liner attachment means strength test. Any suitable means may be used to apply the force specified in 7.4.1.

(iv) 7.4.2 *Seams Strength*—Apply a tensile force of 20 lb in a direction most likely to pull the seam apart. The clamps used to grip the material on either side of the seam to be tested shall have jaws to which are attached ¾-in. (19-mm) diameter washers (see Fig. 4). The clamps shall be attached to the cover material of a completely assembled crib liner in a manner such that the outside diameter of the ¾-in. (19-mm) washers at a point nearest the seam shall be close to, but no closer than ½ in. (13 mm) from the edge of the seam stitching thread.

(v) 7.4.3 *Decorative Components, Attachment Strength*—Apply a tensile force of 20 lb on the decorative component in a perpendicular direction away from the attachment point of the decorative component to the crib liner. With the crib liner held in a convenient position, an appropriate clamp shall be attached to the decorative component. The clamp shall be applied in a manner that will not affect the structural integrity of the attachment between the decorative component and the crib bumper/liner.

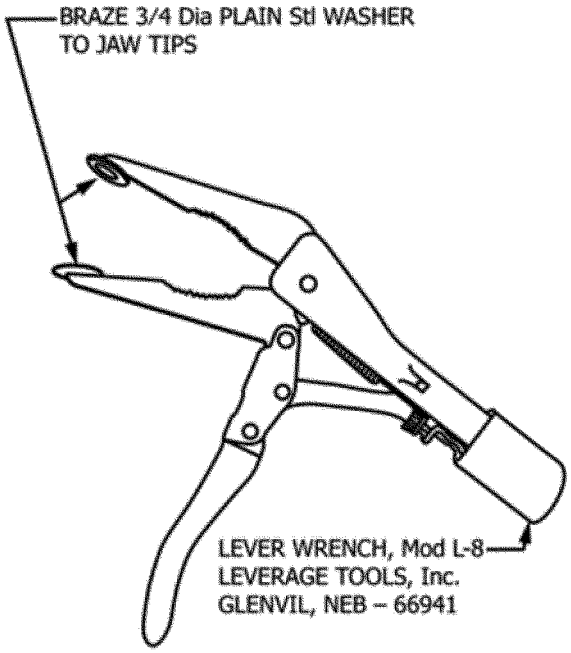

FIG. 4 Seam Clamp

(vi) 7.5 *Permanency of Labels and Warnings:*

(vii) 7.5.1. A paper label (excluding labels attached by a seam) shall be considered permanent if, during an attempt to remove it without the aid of tools or solvents, it cannot be removed, it tears into pieces upon removal, or such action damages the surface to which it is attached.

(viii) 7.5.2. A non-paper label (excluding labels attached by a seam) shall be considered permanent if, during an attempt to remove it without the aid of tools or solvents, it cannot be removed or such action damages the surface to which it is attached.

(ix) 7.5.3. A warning label attached by a seam shall be considered permanent if it does not detach when subjected to a 15 lbf (67 N) pull force applied in any direction most likely to cause failure using a 0.75 in. (19 mm) diameter clamp surface. Gradually apply the force over 5 s and maintain for an additional 10 s.

(xi) 7.6. *Adhesion Test for Warnings Applied Directly onto the Surface of the Product.*

(xii) 7.6.1. Apply the tape test defined in Test Methods D3359, Test Method B—Cross-Cut Tape Test of Test Methods, eliminating parallel cuts.

(xiii) 7.6.2. Perform this test once in each different location where warnings are applied.

(xiv) 7.6.3. The warning statements will be considered permanent if the printing in the area tested is still legible and attached after being subjected to this test.

(xv) 7.6.4. A non-paper label, during an attempt to remove it without the aid of tools or solvents, shall not fit entirely within the small parts cylinder defined in 16 CFR part 1501 if it can be removed.

(xvi) 7.7. *Crib Bumper/Liner Firmness Test*—Select one side of the crib bumper/liner. All marks described in this section shall be made at mid-bumper/liner height. For each crib bumper/liner intended for a short side of a crib, or segments of a crib bumper/liner intended for a short side of a crib, mark two points along the bumper/liner length: One at ⅓ of the total length, and one at ⅔ of the total length (see Figure 5). For each crib bumper/liner intended for a long side of a crib, or segments of a crib bumper/liner intended for a long side of a crib, mark three points along the bumper/liner length: ¼, ½, and ¾ of the total length (see Figure 5). There will be 10 marks in total for a single continuous bumper/liner intended to cover all four sides of a standard full-size rectangular crib. For each crib bumper/liner intended for a circular crib, divide the total bumper/liner length into 10 equal segments and mark the centroid of each segment. For crib bumpers/liners no wider than 8 inches (203 mm), with the long axis intended to be installed vertically on the crib side, mark the centroid of the bumper/liner (see Figure 5). Place the center of the firmness test fixture (Figure 2) on each mark with the feeler arm oriented in a way that is most likely to contact the bumper/liner surface when the fixture is set down, such as over a plush construction. The firmness test fixture may be rotated such that the feeler arm is in any orientation that is completely over the crib bumper/liner.

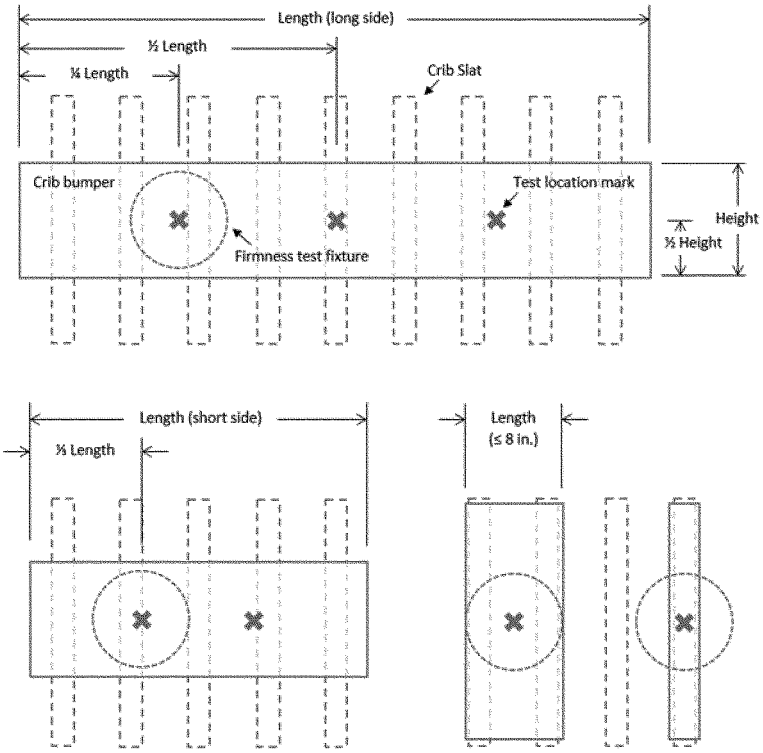

FIG. 5 Firmness Test Locations

(xvii) 7.7.1. Test Equipment—The Firmness Test Fixture of Figure 2 shall be constructed with the following components:

(xviii) 7.7.1.1. A Bottom Disk with a diameter of 203 mm (7.99 in.), thickness of 15 mm (0.59 in.) with a bottom radius of 1 mm (0.039 in.).

(xix) 7.7.1.2. A Feeler Arm of high speed steel comprising a flat bar, 12 mm (0.47 in.) wide, 0.51 mm to 0.76 mm (0.02 to 0.03 in.) thick, with square-cut ends that is positioned over a radial axis of the Bottom Disk and attached to the Bottom Disk such that the Feeler Arm overhangs the edge of the Bottom Disk by 40 mm (1.57 in.).

(xx) 7.7.1.3. A Level Indicator attached to the Bottom Disk near the Feeler Arm, without touching, and such that it indicates level with minimum accuracy of.11.7 mm/m (0.14 in./ft) parallel to the feeler arm and does not overhang the edge of the Bottom Disk in a way that interferes with testing.

(xxi) 7.7.1.4. A Vertical Column with Handle and Collar attached to the center of the Bottom Disk.

(xxii) 7.7.1.5. Total mass of the Apparatus shall be 5.2 kg (11.5 lb) including all components and fasteners.

(xxiii) 7.7.1.6. Mass of the Bottom Disk shall be not less than 70% of the total mass.

(xxiv) 7.7.1.7. Vertical height of assembled apparatus shall not exceed 203.2 mm (8 in.) and the height of the collar shall not exceed 50.8 mm (2 in.) to minimize the bias to the Bottom Disk.

(xxv) 7.7.2. Test Procedure

(xxvi) 7.7.2.1. Preconditioning of Sample—The crib bumper/liner shall be tested in its pre-washed state and also after three wash/dry cycles performed according to the manufacturer's care instructions. The crib bumper/liner shall be conditioned for 48 hours prior to testing in an environment of 23 +/−2 Celsius (73.4 +/−3.6 Fahrenheit) and a relative humidity of 50 +/−5%. The crib bumper/liner shall be fully assembled and dry prior to testing.

(xxvii) 7.7.2.2. Shake the crib bumper/liner to aerate and distribute any filling materials evenly. Allow the crib bumper/liner to settle for 5 minutes.

(xxviii) 7.7.2.3. Place the side to test face up on a horizontal, flat, rigid surface for testing. The crib bumper/liner may be secured to the horizontal surface using the attachment means in a manner that approximates securing the crib bumper/liner to crib rails.

(xxix) 7.7.2.4. Test each placement marked in 7.7 by lowering the firmness test fixture with the bottom disk horizontal until the fixture is supported by the crib bumper/liner. Gently adjust the orientation of the base manually if needed until it is horizontal while resting. Record any contact with the feeler gauge at each placement as a failure of the firmness requirement. Repeat steps 7.7.2.2 and 7.7.2.3 if any placement is within 457 mm (18 in.) of a prior placement, or if 5 minutes have elapsed since completing 7.7.2.2.

(xxx) 7.7.2.5. Repeat firmness testing 7.7.2.1 to 7.7.2.4 until all remaining located placements have been tested or a failure has been recorded.

(xxxi) 7.7.2.6. Repeat firmness testing on the other side of the bumper/liner. Testing the other side is not required for crib bumpers/liners that cannot be reasonably installed on the other side.

(xxxii) 7.8 *Crib Bumper/Liner Entrapment in Openings Test*—Choose a location most likely to admit the head probe, including between the top and bottom edges of the crib bumper/liner and the test platforms or mattress. Create an accessible opening by exerting a force on the bumper/liner using an appropriate clamping device, equal to 3-lbf (13 N) and directed horizontally away from, and perpendicular to, the test platform. The force is be applied gradually over a 5 s period and maintained throughout the head probe test. Insert the head test probe, tapered end first, into any opening created between the crib bumper/liner and the test platform or mattress, and rotate the small head test probe to the orientation most likely to fail. Apply a force of 10 lbf (45 N) at the base of the small head test probe in a direction that is

perpendicular to the plane of the opening. The force is be applied gradually over a 5 s period and maintained throughout the head probe test. Repeat this test at any other locations on the crib bumper/liner most likely to fail.

(xxxiii) 7.8.1. *Test Equipment*

(xxxiv) 7.8.1.1. Head Probe—The head probe specified in ASTM F963 (see Fig. 3) shall be used for entrapment tests.

(xxxv) 7.8.1.2. Test Platforms—Testing shall be conducted on all test platforms in this section. All test platforms shall have four vertical sides, be rectangular in plan, and have an internal length of 52-3/8 +/− 5/8 in and internal width of 28 +/− 5/8 in. Test platforms shall have a rectangular mattress support that supports a standard 5-in full-size crib mattress. Spacing between components, including between slats, shall be 2-3/8 +0/− 1/32 in. Each of the long and short panels shall be rectangular in form with a top, bottom, left, and right side rails. Top rail shall be 26 in above a horizontal mattress support. All spindles shall have ends secured into top and bottom rails. Left and right side rails shall end into top and bottom rails. All rails shall be 1.0 in thick. The top and bottom rail shall have 1.5 in depth. Each long and short panel shall form a vertical corner between the left or right sides when assembled. Round spindles shall be 5/8 in diameter. Flat spindles shall be 1-1/8 in wide by 3/8 in thick with 1/16 in radius edges. Crib bumpers/liners intended for circular cribs shall be tested on a commercially available circular crib.

(xxxvi) 7.8.1.2.1. Test Platform A—This test platform is composed of two long panels with 16 round spindles each and two short panels with eight round spindles each.

(xxxvii) 7.8.1.2.2. Test Platform B—This test platform is composed of one long panel with 16 round spindles, one solid long panel, and two short panels with eight round spindles each.

(xxxviii) 7.8.1.2.3. Test Platform C—This test platform is composed of two long panels with 16 round spindles each and two solid short panels.

(xxxix) 7.8.1.2.4. Test Platform D—This test platform is composed of two long panels with 14 rectangular spindles each and two short panels with seven rectangular spindles each.

(xl) 7.8.1.2.5. Test Platform E—This test platform is composed of one long panel with 14 rectangular spindles, one solid long panel, and two short panels with seven rectangular spindles each.

(xli) 7.8.1.2.6. Test Platform F—This test platform is composed of two long panels with 14 rectangular spindles each and two solid short panels.

(xlii) 7.9 Crib Bumper/Liner Airflow Test—Airflow testing of each crib bumper/liner shall be performed in accordance with the air permeability test method specified in the British Standard BS 4578:1970, *Specification for Methods of test for hardness of, and for air flow through, infants' pillows,* with the following modifications:

(xliii) 7.9.1 The test shall be performed on a plane rigid perforated support that will minimally interfere with air flow.

(xliv) 7.9.2 The flow rate shall be adjusted to 2 L/min.

(11) Instead of complying with section 8 of ASTM F1917–12, comply with the following:

(i) 8. Marking and Labeling

(ii) 8.1. Each product and its retail package shall be marked or labeled clearly and legibly to indicate the following:

(iii) 8.1.1. The name, place of business (city, state, and mailing address, including zip code), and telephone number of the manufacturer, distributor, or seller.

(iv) 8.1.2. A code mark or other means that identifies the date (month and year as a minimum) of manufacture.

(v) 8.2. The marking and labeling on the product shall be permanent.

(vi) 8.3. Any upholstery labeling required by law shall not be used to meet the requirements of this section.

(vii) 8.4. Crib bumpers/liners shall be marked or labeled clearly and legibly, in the English language at a minimum, to identify which segments of the bumper/liner are intended for the short and long sides of the crib, unless the bumper/liner is intended for a circular crib or is less than 28 inches in length, not including attachment means.

(viii) 8.5. *Warning Design for Product:*

(ix) 8.5.1. The warnings shall be easy to read and understand and be in the English language at a minimum.

(x) 8.5.2. Any marking or labeling provided in addition to those required by this section shall not contradict or confuse the meaning of the required information, or be otherwise misleading to the consumer.

(xi) 8.5.3. The warning statements shall be conspicuous and permanent.

(xii) 8.5.4. The warnings shall conform to ANSI Z535.4–2011, American National Standard for Product Safety Signs and Labels, sections 6.1–6.4, 7.2–7.6.3, and 8.1, with the following changes.

(xiii) 8.5.4.1. In sections 6.2.2, 7.3, 7.5, and 8.1.2 of ANSI Z535.4–2011, replace ''should'' with ''shall.''

(xiv) 8.5.4.2. In section 7.6.3 of ANSI Z535.4–2011, replace ''should (when feasible)'' with ''shall.''

(xv) 8.5.4.3. Strike the word ''safety'' in ANSI Z535.4–2011 when used immediately before a color (for example, replace ''safety white'' with ''white'').

Note 3 to paragraph (b)(11)(xv). For reference, ANSI Z535.1 provides a system for specifying safety colors.

(xvi) 8.5.5. The Safety Alert Symbol and the signal word ''WARNING'' shall be at least 0.2 in. (5 mm) high. The remainder of the text shall be in characters whose uppercase shall be at least 0.1 in. (2.5 mm) high.

Note 4 to paragraph (b)(11)(xvi). For improved warning readability, typefaces with large height-to-width ratios, which are commonly identified as ''condensed,'' ''compressed,'' ''narrow,'' or similar should be avoided.

(xvii) 8.5.6. *Message Panel Text Layout:*

(xviii) 8.5.6.1. The text shall be left aligned, ragged right for all but one-line text messages, which can be left aligned or centered.

Note 5 to paragraph (b)(11)(xviii). Left aligned means that the text is aligned along the left margin, and, in the case of multiple columns of text, along the left side of each individual column. Please see Fig. 6 for examples of left aligned text.

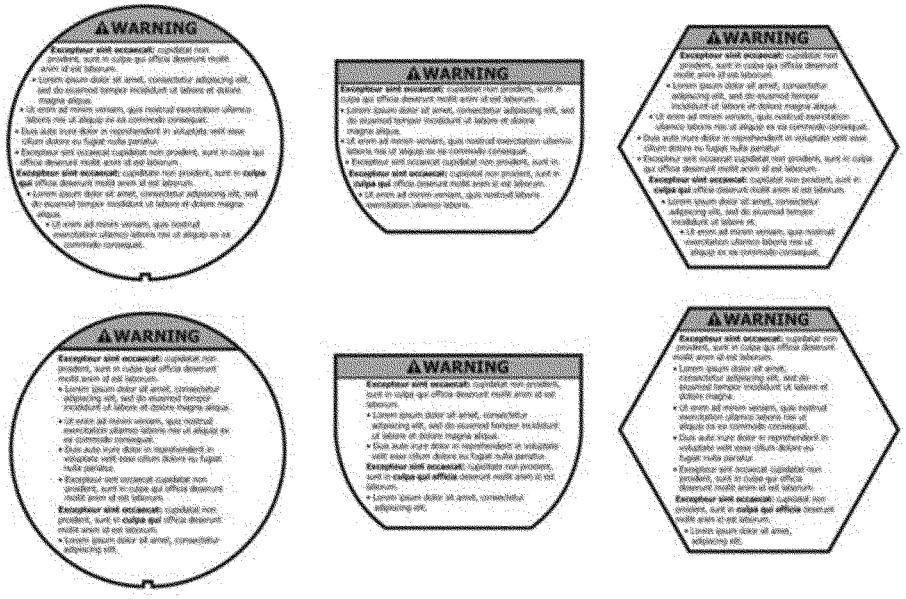

FIG. 6 Examples of Left Aligned Text

(xix) 8.5.6.2. The text in each column should be arranged in list or outline format, with precautionary (hazard avoidance) statements preceded by bullet points. Multiple precautionary statements shall be separated by bullet points if paragraph formatting is used.

(xx) 8.5.7. An example in the format described in this section is shown in Fig. 7.

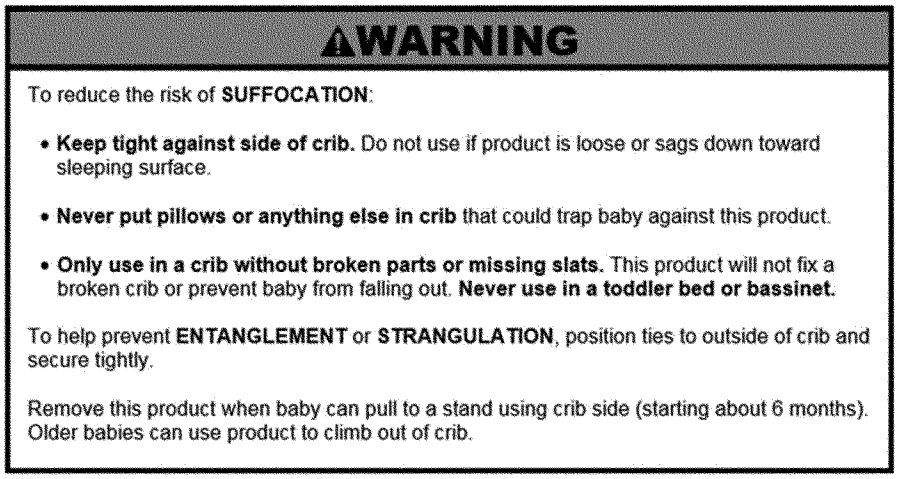

FIG. 7 Example—Warning Statement Text Layout

(xxi) 8.6. *Warning Statements for Crib Bumpers/Liners*—Each crib bumper/liner, or each crib bumper/liner panel if the bumper/liner is sold as multiple panels that can be used separately, shall have warning statements to address the following, at a minimum:

''To reduce the risk of SUFFOCATION:

• Keep tight against side of crib. Do not use if product is loose or sags down toward sleeping surface.

• Never put pillows or anything else in crib that could trap baby against this product.

• Only use in a crib without broken parts or missing slats. This product will not fix a broken crib or prevent baby from falling out. Never use in a toddler bed or bassinet.

To help prevent ENTANGLEMENT or STRANGULATION, position ties to outside of crib and secure tightly. [Exception: If product does not include an attachment means greater than 7 inches in length, this statement may be omitted.]

Remove this product when baby can pull to a stand using crib side (starting about 6 months). Older babies can use product to climb out of crib.''

Note 6 to paragraph (b)(11)(xxi). Address means that verbiage other than what is shown can be used as long as the meaning is the same or information that is product-specific is presented.

(12) Instead of complying with section 9 of ASTM F1917–12, comply with the following:

(i) 9. Instructional Literature

(ii) 9.1. Instructions shall be provided with the product and shall be easy to read and understand, and shall be in the English language at a minimum. These instructions shall include information on assembly, installation, maintenance, cleaning, and use, where applicable.

(iii) 9.2. The instructions shall include all warnings specified in 8.6, where applicable.

(iv) 9.3. The warnings in the instructions shall meet the requirements specified in 8.5.4, 8.5.5 and 8.5.6, except that sections 6.4 and 7.2–7.6.3 of ANSI Z535.4 need not be applied. However, the signal word and safety alert symbol shall contrast with the background of the signal word panel, and the warnings shall contrast with the background of the instructional literature.

Note 7 to paragraph (b)(12)(iv). For example, the signal word, safety alert symbol, and the warnings may be black letters on a white background, white letters on a black background, navy blue letters on an off-white background, or some other high-contrast combination.

Note 8 to paragraph (b)(12)(iv). For additional guidance on the design of warnings for instructional literature, please refer to ANSI Z535.6, American National Standard: Product Safety Information in Product Manuals, Instructions, and Other Collateral Materials.

(v) 9.4. Any instructions provided in addition to those required by this section shall not contradict or confuse the meaning of the required information, or be otherwise misleading to the consumer.

Alberta E. Mills,

Secretary, Consumer Product Safety Commission.

[FR Doc. 2020–06142 Filed 4–2–20; 8:45 am]

BILLING CODE 6355–01–P

FEDERAL COMMUNICATIONS COMMISSION

47 CFR Part 15

[ET Docket No. 20–36; FCC 20–17; FRS 16585]

Unlicensed White Space Device Operations in the Television Bands

AGENCY: Federal Communications Commission.

ACTION: Proposed rule.

SUMMARY: In this document, the Commission proposes to revise our rules to provide additional opportunities for unlicensed white space devices operating in the broadcast television bands (TV Bands) to deliver wireless broadband services in rural areas and applications associated with the Internet of Things (IOT). Therefore, the Commission offers several proposals to spur continued growth of the white space device ecosystem, especially for providing affordable broadband service to rural and underserved communities that can help close the digital divide.

DATES: Comments are due on or before May 4, 2020; reply comments are due on or before June 2, 2020.

ADDRESSES: You may submit comments, identified by ET Docket No. 20–36, by any of the following methods:

- *Federal Communications Commission's Website: http://apps.fcc.gov/ecfs/.* Follow the instructions for submitting comments.
- *People with Disabilities:* Contact the FCC to request reasonable accommodations (accessible format documents, sign language interpreters, CART, etc.) by email: *FCC504@fcc.gov* or phone: 202–418–0530 or TTY: 202–418–0432.

For detailed instructions for submitting comments and additional information on the rulemaking process, see the **SUPPLEMENTARY INFORMATION** section of this document.

FOR FURTHER INFORMATION CONTACT: Hugh Van Tuyl, Office of Engineering and Technology, 202–418–7506, *Hugh.VanTuyl@fcc.gov.*

SUPPLEMENTARY INFORMATION: This is a summary of the Commission's Notice of Proposed Rulemaking, ET Docket No. 20–36, FCC 20–17, adopted on February 28, 2020, and released on March 2, 2020. The full text of this document is available for inspection and copying during normal business hours in the FCC Reference Center (Room CY–A257), 445 12th Street SW, Washington, DC 20554. The full text may also be downloaded at: *https://transition.fcc.gov/Daily_Releases/Daily_Business/2018/db0223/FCC-18-18A1.pdf.*

People with Disabilities: To request materials in accessible formats for people with disabilities (braille, large print, electronic files, audio format), send an email to *fcc504@fcc.gov* or call the Consumer & Governmental Affairs Bureau at 202–418–0530 (voice), 202–418–0432 (tty).

Synopsis

1. *Background.* Unlicensed white space devices can be used to provide a variety of wireless services, including broadband data. Fixed white space devices are being deployed today by Wireless Internet Service Providers (WISPs) to provide internet connectivity in rural and underserved areas, including for schools and libraries. The Commission's Part 15 rules allow unlicensed white space devices to operate at locations where frequencies are not in use by licensed services.

2. In 2008, the Commission first authorized unlicensed white space device operations, both fixed and personal/portable, in portions of the VHF and UHF broadcast television bands (TV bands) that were not being used by TV broadcasters and associated services. In 2010, 2012, and 2015, the Commission took steps to promote additional opportunities for unlicensed white space devices to use spectrum in the TV bands. To prevent harmful interference to broadcast television reception and other protected users, white space devices obtain a list of available channels and operating power levels that may be used at their particular location from databases administered by private entities approved by the Commission. Fixed white space devices must incorporate a geo-location capability and a means to access a database. Portable white space devices can either acquire a list of available channels via another device (Mode I), or themselves include geo-location and database access capabilities (Mode II).

3. In the 2015 *White Spaces Order,* the Commission took additional action to promote white space device usage in the repacked TV bands following the broadcast TV spectrum incentive auction, and it also authorized white space device operations in the 600 MHz duplex gap, in unused spectrum in the 600 MHz service band (at locations where 600 MHz service licensees had not commenced operations), and unused portions of television channel 37 (in areas that would not interfere with Radio Astronomy Service and Wireless Medical Telemetry Service incumbents).

4. In an effort to promote more flexibility for white space device operators in rural areas, the Commission permitted fixed white space devices, which under then-existing rules were limited to no more than 4 watts EIRP, to operate at higher power levels of up to 10 watts EIRP in ''less congested'' areas, which are defined as those areas where at least half the television channels are unused for broadcast services and available for white space use. In that order, the Commission retained the existing requirement that fixed devices operate on antennas that are no more than 30 meters above

ground and no more than 250 meters height above average terrain (HAAT). Most recently, in March 2019, the Commission adopted the *White Spaces Report and Order and Order on Reconsideration,* in which it provided additional flexibility for fixed white space devices to operate at up to 100 meters above ground in ''less congested'' areas, but retained the 250 meter HAAT limitation based on the record before it.

5. On May 3, 2019, Microsoft Corporation filed a petition for rulemaking requesting that the Commission provide additional flexibility for white space device operations in the TV bands. Specifically, Microsoft requests that the Commission: (1) Permit fixed devices in ''less congested'' areas to operate at higher radiated power, up to 16 watts EIRP, to support expansion of broadband in rural America, (2) permit fixed devices to operate with higher HAAT, up to 500 meters, to improve rural coverage, (3) examine the possibility of authorizing higher-power operations on first-adjacent channels to TV operations, with appropriate safeguards to prevent harmful interference, (4) permit higher power mobile operations within geo-fenced areas, and (5) adjust the rules to support narrowband IoT white space devices.

6. The Commission sought comment on the petition, and 21 parties filed comments and 16 parties filed reply comments. These commenters include several proponents of white space device operations generally supporting Microsoft's proposals, the National Association of Broadcasters (NAB), commenters concerned about protecting Wireless Medical Telemetry Service operations on Channel 37, and commenters concerned about the potential effect of Microsoft's proposals on wireless microphone users that also operate on TV broadcast spectrum not being used by other authorized services.

7. *Discussion.* The Commission proposes targeted changes to the white space device rules in the TV bands to provide improved broadband coverage that will benefit American consumers in rural and underserved areas. Specifically, the Commission proposes to permit higher transmit power and higher antenna HAAT for fixed white space devices in ''less congested'' geographic areas. In addition, the Commission proposes to permit higher power mobile operation within ''geo-fenced'' areas. The Commission also proposes rule revisions designed to facilitate the development of new and innovative narrowband IoT services. The Commission also seeks comment on methods that could be used to allow higher power operation by white space devices when operating within the service contour of an adjacent channel TV station. The Commission do not propose any rule revisions for white space device operations above TV channel 35, including in the 600 MHz duplex gap or 600 MHz service band.

8. *Fixed white space devices in rural areas in the TV Bands.* The Commission proposes rule changes for fixed white space devices that operate in the TV bands in order to enable improved broadband service in rural areas and underserved areas, defined as ''less congested'' areas in our rules. Specifically, the Commission proposes to increase the maximum permissible radiated power from 10 to 16 watts EIRP in these areas, and to increase the maximum permissible antenna HAAT from 250 meters to 500 meters. Because the maximum transmission range of a white space device is a function of both the power and antenna HAAT, these changes will enable white space devices to provide broadband service over larger areas. Given these proposed revisions, the Commission also proposes to protect other users of the TV bands by increasing the minimum required separation distances from protected TV service contours and other protected services for white space devices operating at the proposed higher power and antenna height limits, and continue to protect Wireless Medical Telemetry Service and Radio Astronomy Service operations by maintaining the current power and HAAT limits on Channel 36. The Commission seeks comment on the benefits or costs of these proposed changes with respect to white space device users and to authorized users.

9. *High power limits.* The rules currently permit fixed white space devices in the TV bands to operate with a maximum of four watts EIRP in any area, provided the device meets minimum separation distances from co-channel and adjacent channel users in the band. In addition, a fixed white space device may operate with a higher power of up to 10 watts EIRP in the TV bands (except Channel 36) in ''less congested'' areas, defined as those areas where at least half the television channels in the band of operation (*i.e.,* low VHF, high VHF or UHF) are not in use, and the fixed device complies with increased separation distances from other users in the band. Fixed white space devices are limited to one-watt maximum conducted transmitter power requiring radiated power levels above one-watt EIRP to use an antenna with directional gain, *e.g.,* 6 dBi to produce four watts EIRP, and 10 dBi to produce 10 watts EIRP.

10. In its petition, Microsoft requests that the Commission increase the radiated limit to permit fixed device operation with a maximum of 16 watts EIRP in ''less congested'' areas. Advocates of white space device operations support this request. NAB, commenting on behalf of potentially affected broadcasters, indicates that it does not oppose this proposal provided appropriate separation distances are established to protect broadcasters. Similarly, Sennheiser does not oppose revision provided the separation distances are revised to protect microphone operations. Commenters supporting Wireless Medical Telemetry Service (WMTS) operations on Channel 37 oppose any revision that would change the existing power limits for white space device operations either on Channel 37 or on adjacent Channels 36 and 38.

11. The Commission proposes to permit fixed devices to operate in the TV bands, up to Channel 35, with a maximum 16 watts EIRP (12 dBW) in ''less congested'' areas. This change will permit fixed devices used in less congested, including rural, areas to reach users at greater distances, thus enabling improved broadband coverage at less cost in these hard-to-reach areas. Higher power will also enable signals to better penetrate foliage, buildings, and other obstacles, thus providing improved coverage at locations where there is not a direct line-of-sight to the transmitter.

12. Specifically, the Commission proposes to maintain the one-watt transmitter conducted power limit for fixed devices and require that the higher power be achieved by using higher gain antennas, *i.e.,* 12 dBi to produce 16 watts EIRP with one-watt transmitter power. Because higher gain antennas are more highly directional, this proposed requirement will improve spectrum efficiency by ensuring that less white space device energy is directed outside the main antenna beam than would be the case if the Commission permitted higher transmitter power using lower gain, less directional antennas. The Commission also proposes that in cases where an antenna with a gain higher than 12 dB is used, the transmitter power must be reduced below one-watt by the amount in dB that the antenna gain exceeds 12 dBi. This requirement will ensure that the EIRP from a fixed device does not exceed the proposed 16-watt limit if a very high gain antenna is used. To maintain protection for Wireless Medical Telemetry Service and radio astronomy operations on Channel

37, the Commission do not propose to revise our current rules to permit higher power operations in Channel 36 or higher at this time.

13. The Commission seeks comment on our proposal for permitting higher power operations in the TV bands (Channels 2–35). Should we allow the maximum radiated power level to increase from 10 watts EIRP to 16 watts EIRP in less congested areas? Would a different maximum from that proposed be more appropriate to enable service to rural areas? Should we allow even higher power levels under certain circumstances, and if so, what power levels and under what circumstances? How does the proposed antenna gain requirement affect the ability to serve rural areas? Should that requirement be relaxed or tightened? What are the trade-offs, both technically and economically, regarding the potential for causing interference versus the ability to serve more areas?

14. *Higher antenna height above average terrain limits.* The rules currently permit fixed white space devices to operate with a maximum 250-meter antenna HAAT. If a fixed white space device antenna HAAT exceeds 250 meters, the white space database will not provide a list of available channels to the device and the device is not permitted to operate. This requirement was adopted to limit the distance at which interference to other users of the TV bands could occur. However, an antenna HAAT limit also precludes white space devices from operating at certain locations, *e.g.,* those where the ground HAAT already exceeds 250 meters. In the *White Spaces Order on Reconsideration,* the Commission upheld its previous decision to maintain a 250-meter antenna HAAT limit but stated that it might consider increasing the limit in the future if there were a more complete record addressing this issue.

15. The Commission now revisits the issue based on a more complete record. Microsoft argues that a higher HAAT limit subject to certain coordination conditions would reduce the likelihood of harmful interference. NAB expresses support for such a change provided that the Commission adopts a special coordination requirement for all fixed white space device operations above 250 meters HAAT and also adjusts the separation distances to protect broadcasters. Sennheiser does not oppose this revision provided the separation distances are revised to protect microphone operations. WMTS interests do not oppose an HAAT limit provided it does not apply on Channel 37 or adjacent Channels 36 and 38.

16. The Commission proposes to increase the maximum permissible antenna HAAT for fixed white space devices operating on channels 2–35 from 250 meters to 500 meters and seek comment on appropriate procedures that may be necessary to ensure that broadcaster operations and other entities in the TV bands are protected. As commenters note, increasing permissible antenna HAAT will improve broadband coverage in rural areas by enabling signals to reach greater distances and will enable fixed white space devices to operate at locations where they are not currently permitted due to the 250-meter HAAT limit, such as existing towers located at higher elevations. We also note that Microsoft, NAB and wireless interests agree that 500 meters is an appropriate maximum HAAT for fixed white space devices. In addition, operation from a higher antenna site can help increase coverage by permitting devices to operate above the tree line to avoid signal losses through leaves and to avoid clutter such as buildings. To protect Wireless Medical Telemetry Service and radio astronomy operations on Channel 37, the Commission do not propose to revise our rules to permit operation with a higher HAAT in Channel 36 or higher.

17. The Commission seeks comment on this proposal. What are the benefits of a higher HAAT limit in terms of improved rural coverage and increased transmitter site availability in high elevation areas? Will the increased fixed white space device transmission range associated with higher HAATs limit opportunities for spectrum sharing with other white space devices? Would an upper HAAT limit other than 500 meters be more appropriate? Should white space device operations at HAATs greater than 250 meters be limited to less congested areas?

18. The Commission also seeks comment on whether, as suggested by Microsoft, it should require a coordination procedure between white space devices and broadcast licensees when white space devices operate with HAATs exceeding 250 meters. Microsoft's proposed coordination procedures comprise several steps including notifying a white space administrators, notifying broadcast licensees, operating on a test basis on a 30 days trial authorization, as well as a process to submit claims of harmful interference, investigate such claims, and upon satisfactorily addressing any such claims, permit authorization on a permanent basis. While the Commission recognizes that this proposed procedure is designed to address NAB's concerns that white space devices operating at higher power and antenna heights could cause harmful interference to TV service, the Commission are concerned about the procedure's complexity and whether such procedures are even warranted given the existing obligations of unlicensed devices to protect authorized radio services.

19. The Commission believes that a simpler alternative to Microsoft's suggested coordination procedure could be used to achieve the same results. Specifically, an alternative procedure could require a party wishing to operate a fixed white space device at HAATs greater than 250 meters to notify potentially affected protected entities of their intended operation at least 48 hours in advance. The notification would include the prospective white space device operator's contact information, geographic coordinates of the antenna, antenna height above ground and average terrain, EIRP and channel(s) of operation. While entities would be expected to acknowledge receipt of the notification, if a response is not received within 48 hours, the party installing the fixed white space device would be permitted to commence operation. Operators of fixed white space devices with HAATs greater than 250 meters would be required to provide information upon request to a potentially affected protected entity on the white space devices' operational hours to help licensees determine whether a white space device was causing harmful interference. For notification purposes, the Commission would define a potentially affected station consistent with Microsoft's proposal—*i.e.,* a station would receive notification that its broadcast contour was within the separation distance corresponding to an assumed HAAT 50 meters higher than the actual deployment. To accommodate actual deployments exceeding 450 meters where Microsoft did not provide a separation distance, the Commission would add an additional row to the table of separation distances with relevant values.

20. The Commission seeks comment on this procedure. As a threshold, is such a procedure even necessary? If so, would the proposed procedure strike the proper balance between ensuring interference protection for protected entities and providing white space device operators with the ability to deploy devices with high HAATs in a timely manner? Are there other alternatives that would satisfy the same requirements? Should protected entities be defined as described above or is there a better definition? What method of

communication should a white space device operator use to contact licensees, *e.g.,* email or other electronic messaging, written mail, fax, telephone, etc.? How would any of these coordination/notification procedures affect the white space database operation? Could they be implemented quickly? What costs would be involved?

21. Under any coordination and/or notification procedure, previously coordinated devices would require new coordination/notification if a fixed white space device is moved more than 100 meters, or when an increase is made to the EIRP or HAAT that increases the minimum required separation distance from the contours of co-channel or adjacent channel TV stations. These proposed requirements are for the purpose of determining when a white space device operator must notify potentially affected stations of changes in the operating parameters of a device with an HAAT above 250 meters; the Commission are not proposing to alter the current requirement that a fixed white space device must notify the database of changes in location of greater than 50 meters or in the antenna height above ground. The fixed white space device would need to obtain a new list of available channels when moved more than 100 meters. The Commission recognizes that Microsoft proposed to base new coordination requirements on a 50 meter distance (consistent with existing rules), but because Microsoft's proposed distances in the tables of required separations from TV station contours are rounded to the nearest 0.1 kilometer (100 meters), the Commissions see no reason to require a new coordination for changes less than this amount. The Commission also notes that the HAAT levels in the proposed table of separation distances is defined in 50-meter steps for HAAT's above 250 meters. Thus, there would be no need to require new coordination/notification for small HAAT increases within a 50-meter step. The Commission seeks comment on this proposal.

22. The Commission is not proposing that white space devices operate during a specific test or trial period as suggested by Microsoft. White space devices, like all other unlicensed devices, must not cause harmful interference to authorized services and must cease interference if harmful interference occurs. Additionally, licensees can bring claims of harmful interference to the Commission or the party operating unlicensed devices at any time, so the Commission do not believe that a 30-day trial period is necessary. The Commission seeks comment on this view.

23. *Antenna height above ground.* In a related matter, the Commission seeks comment on whether the Commission should increase or remove the limit on antenna height above ground level. The Commission previously increased the maximum permissible antenna height above ground from 30 meters to 100 meters in ''less congested'' areas in the *White Spaces Order on Reconsideration.* The Commission took this action to improve wireless broadband service to persons in rural and other underserved areas, noting that a 100-meter antenna height above ground limit will benefit wireless broadband providers and users by permitting antennas to be mounted on towers or other structures at heights sufficient to clear intervening obstacles such as trees and hills that would attenuate the transmitted signal, thereby increasing the range at which the signal can be received. The Commission made no changes to the rule limiting maximum antenna HAAT to 250 meters at that time.

24. In light of our proposal to increase the maximum antenna HAAT to 500 meters in this *NPRM,* the Commission believes it is appropriate to re-examine the antenna height above ground limit. Antenna heights above ground and average terrain are directly related, in that any change to a station's antenna height above ground changes its HAAT by the same amount, *e.g.,* a 30-meter increase in height above ground increases the HAAT by 30 meters. However, the Commission notes that limiting the antenna height above ground may also limit the maximum achievable HAAT in areas where the terrain is flat since in those areas the HAAT will be approximately the same as, or not significantly higher than, the antenna height above ground. Therefore, the antenna height above ground limit (30 or 100 meters) may preclude white space device operators from taking advantage of the higher HAAT limit we are proposing, or even the current 250-meter limit. Moreover, the Commission notes that the distance separation rules to protect TV reception are based on HAAT, not antenna height above ground level.

25. Accordingly, the Commission seeks comment on whether they should make any changes to the antenna height above ground limit. Does the current antenna above ground limit restrict flexibility to design and deploy white space networks? Should the Commission increase the antenna height above ground limit, and if so, by how much? Should the Commission remove the height above ground level limit completely and rely only on HAAT? Given that the separation distances are based only on HAAT and not the antenna height above ground, what effect, if any, would such a change have on the potential of causing harmful interference to a protected service? If the Commission modifies or remove the antenna height above ground limit, should the modified rules apply across the entire U.S. or only in certain areas (*e.g.,* ''less congested areas'')

26. *Separation distance.* Because white space device operations must protect other authorized services from harmful interference, with our proposed increases in fixed white space device maximum permissible radiated power and antenna HAAT in the TV bands, we also propose increases in the minimum required separation distances between white space devices operating at higher power/HAAT in order to protect these other authorized services from harmful interference.

27. The Commission seeks comment on these proposals. Do the proposed separation distances for the higher power and antenna HAAT levels provide adequate protection to co-channel and adjacent channel TV service? Are any other changes necessary to protect TV service in light of the proposed power and HAAT levels?

28. *Protection of other operations in the TV bands.* In addition to the broadcast television service, white space devices must protect certain other operations in the TV bands. These include TV translator receive sites, Low Power TV (including Class A) receive sites, Multi-channel Video Programming Distributor (MVPD) receive sites, fixed Broadcast Auxiliary Service (BAS) links, the private land mobile radio and commercial mobile radio services (PLMRS/CMRS), and Low Power Auxiliary Station services (referenced herein as licensed wireless microphones). When the Commission increased the maximum power for fixed white space devices operating in less congested areas from 4 watts EIRP to 10 watts EIRP in the *White Spaces Order* in 2015, it also slightly increased the minimum required separation distances from TV translator receive sites, PLMRS/CMRS, and temporary BAS links. Because we are now proposing to increase the maximum fixed white space device EIRP from 10 watts to 16 watts, and the maximum HAAT from 250 meters to 500 meters, we are proposing to make additional changes to the protection criteria for operations in the TV bands other than broadcasting.

29. The Commission proposes changes to the keyhole shaped exclusion zone that is specified to protect the receive sites of TV

translators, low power TV stations, Class A TV stations, MVPDs, and BAS facilities from white space devices. Under the current rules, white space devices are prohibited from operating co-channel and adjacent channel to the TV channel(s) being received by these facilities over an arc of ±30 degrees from a line between the receive site and each associated transmitter. The protection zone extends to a maximum distance of 80 kilometers from the protected receiver toward its associated transmitter for co-channel operations and to 20 kilometers for adjacent channel operation. In addition, to prevent interference from white space device signals outside the main beam of the protected receive antenna, white space devices are prohibited from operating within a circular area of 10.2 kilometers co-channel and 2.5 kilometers adjacent channel from the receive sites in all directions off the ±30 degree arc when a white space device operates at an EIRP between four and ten watts. The Commission believes the 80-kilometer co-channel and 20-kilometer adjacent channel protection distances are large enough to sufficiently protect these protected receive sites from interference from fixed devices operating at 16 watts EIRP. However, to protect these sites from white space devices that are located outside the main beam, the Commission believes a modest increase in distance is necessary. The Commission are therefore proposing to adjust those distances to prohibit fixed devices operating with EIRPs greater than 10 watts from operating within 16.6 kilometers co-channel and 3.5 kilometers adjacent channel outside the ±30 degree arc of the protected received site. The Commission seeks comment on this proposal. Is an increase in separation distances necessary within the main beam of the antenna, and if so, what are the appropriate distances and how should they be calculated? Are increased separation distances necessary to protect receive sites outside the main beam of the receive antenna, and are the proposed separation distances appropriate?

30. The Commission also proposes changes to the protection criteria for the private land mobile radio services and commercial mobile radio services (PLMRS/CMRS). These services operate on TV channels 14–20 in 11 major markets and in some additional areas under rule waivers. PLMRS/CMRS operations are protected from interference from white space devices through a circular exclusion zone extending from the center of each market, or from specific geographic coordinates for operations under a waiver. These exclusion zones are based on the Commission's methodology described in the *White Spaces Second Report and Order.* Using the same methodology the Commission previously used to determine the protection zones, the Commission proposes that fixed white space devices operating at more than 10 watts EIRP in less congested areas may not operate within a circular exclusion zone of 139.2 kilometers co-channel and 132.2 kilometers adjacent channel of the 11 major markets where PLMRS/CMRS stations are permitted to operate and within 59.2 kilometers co-channel and 52.2 kilometers adjacent channel of PLMRS/CMRS base stations operating outside the 11 major markets under a waiver. The Commission seeks comment on these proposals. Are the proposed separation distances appropriate to protect PLMRS/CMRS operations? Should we define three sets of exclusion zones based on power levels, *e.g.,* up to four watts, between four and ten watts, and greater than ten watts, or should we combine two or more tiers for simplicity as there is not a large difference between them? What effect might these proposals have on implementing the statutory directive for the Commission to transition public safety operations out of T-Band and auction the spectrum for use by other services?

31. With regard to licensed wireless microphones, the Commission proposes to increase the minimum required separation distance from fixed white space devices operating at power levels greater than 10 watts from one kilometer to 1.3 kilometers. This proposed change is intended to provide the same protection level to licensed wireless microphones as the current rules. The Commission calculated this increased distance using the conservative assumption of free space propagation. The Commission seeks comment on this proposal. Is it necessary to increase the minimum required separation distance from licensed wireless microphones, and is our proposed distance appropriate?

32. The Commission seeks comment on whether any changes are necessary to the definition of ''less congested'' area given the revised rules that the Commission are proposing in this NPRM. Is the current definition appropriate, *i.e.,* that half the channels in the band of operation be vacant? If not, what is an appropriate metric for defining ''less congested'' area? Because the number of vacant channels at a location can vary based on the EIRP and HAAT of a white space device, should we define vacant channels at a particular antenna height and power level? Nominet expressed concern that because the required separation distances from TV station contours vary according to white space device HAAT, it can be difficult to determine the precise number of channels that may be vacant in any given area. Nominet proposes that the Commission revise the definition to one based on population density, which would make it easier to determine where devices that operate with higher power or antenna height can be deployed to serve more rural areas. Should the Commission instead base the definition of ''less congested'' on the population density of an area where the white space device is located as suggested by Nominet? If the Commission were to adopt a definition of ''less congested'' based on population density, what is the appropriate population density and how would the white space database determine whether a location meets the definition? How would such changes affect the availability of ''less congested'' areas compared to those available today? Would such areas be more pervasive? Or less? Are there other technical requirements the Commission could adopt in conjunction with a change to the definition of ''less congested'' areas to reduce the potential of causing harmful interference when higher EIRP and HAATs are used? Finally, the Commission requests comment on the benefits or costs of any changes to the Commission's current definition.

33. *Higher power mobile operation within ''geo-fenced'' areas.* The white space rules permit two general classes of devices, fixed devices and personal/portable devices. As noted above, under the current rules fixed white space devices may operate with up to four watts EIRP generally, and up to 10 watts in ''less congested'' areas. Personal/portable devices may operate with a maximum EIRP of 100 milliwatts, may load channel availability information for multiple locations from the white space database and use that information to define a geographic area within which it can operate on a mobile basis on the same available channels at all locations, and they must contact the database again if they move beyond the boundary of the area where the channel availability data is valid.

34. In its petition, Microsoft requests that the Commission permit the use of fixed devices on mobile platforms, such as school buses or agricultural equipment, within ''geo-fenced'' areas, *i.e.,* defined geographic areas over which a mobile device is permitted to

operate. This proposal is analogous in many respects to the rules for personal/portable devices that are permitted to operate within a defined geographic area. Microsoft, however, proposes to permit mobile white space devices to operate at higher power levels than the rules currently permit for personal/portable devices (*i.e.,* at the same power level as is permitted for fixed white space devices), and proposes specific additional restrictions to prevent harmful interference to users of the TV bands. Advocates of white space device operations generally support Microsoft's proposal.

35. The Commission proposes to allow white space devices to operate on TV Channels 2–35 on mobile platforms within geo-fenced areas at higher power levels than the rules currently permit for portable devices, and proposes to limit such operations to ''less congested'' areas to limit their potential for causing harmful interference. Microsoft suggests that the Commission permits fixed devices to operate on mobile platforms. However, because fixed stations, by definition, are stations that communicate between fixed points (*i.e.,* stations that do not move), the Commission are instead proposing to allow mobile Mode II personal/portable white space devices to operate at higher power levels commensurate with that allowed for fixed devices within ''less congested'' areas and limited to pre-cleared geo-fenced areas. These types of geo-fenced operations could benefit persons in rural areas by enabling improved communications on moving vehicles such as school buses and agricultural equipment, and for applications such as monitoring roaming livestock. The Commission seeks comment on the benefits or costs of this proposal with respect to white space device users or other authorized users of the TV band spectrum.

36. The Commission proposes to permit a higher power Mode II white space device installed on a movable platform to load channel availability information for multiple locations in the vicinity of its current location and to use that information to define a geo-fenced area within which it can operate on the same available channels at all locations. Consistent with the requirements for Mode II personal/portable devices, The Commission proposes to require that the white space device's location be checked at least once every 60 seconds while in operation, except while in sleep mode, *i.e.,* in a mode in which the device is inactive but is not powered-down. The Commission recognizes, however, that checks every 60 seconds may be insufficient to protect services in locations where coverage contours and usage of wireless microphones varies rapidly from one location to the next. To limit the potential of movable devices to cause harmful interference, we propose that a device may not use channel availability information for multiple locations if/when it moves closer than 1.6 kilometers to the boundary of the geo-fenced area in which the device operates, or at any point outside that boundary. This proposed limitation is designed to ensure that a device moving at 60 miles per hour (1.6 kilometers per minute) does not cross outside the boundary between device re-checks of its location. We further propose, as recommended by NAB, to prohibit operation on board aircraft or satellites to limit the range at which interference could occur.

37. The Commission seeks comment on these proposals. Should the Commission allow Mode II portable devices to operate at higher power in ''less congested'' areas, and how would such operations benefit persons in those areas? Should the Commission instead permit devices operating under the fixed device rules to operate on mobile platforms as suggested by Microsoft and others? What effect would either approach have on the equipment approval process for white space devices? For example, could portable Mode II devices be approved at the higher power level for general usage because the database would limit the amount of power that they could use for operations in any specific area? What antenna requirements should apply to higher power mobile devices? The Commission notes that under the current rules, fixed devices may use detachable antennas with high gain, whereas portable devices must use permanently attached antennas, which can have the effect of limiting antenna size and gain. Should the Commission allow higher power mobile devices to use detachable, higher gain antennas as we permit for fixed devices? Can technologies such as electronically steerable beams allow mobile devices to operate with higher gain, and therefore more highly directional, antennas? If the Commission permits use of detachable antennas for higher power mobile white space devices, should the Commission create a new class of white space devices, such as mobile white space devices, to distinguish such devices from personal/portable white space devices? Are there other rules that need to be modified or limitations that should be imposed for such use?

38. The Commission also seeks comment on other requirements for higher power mobile white space devices. Are the proposed operational limitations sufficient to protect other users of the TV bands, including television, cable headends, translator receive sites and wireless microphone users? Do the Commission need to place limitations on the size of the area over which a higher power mobile device could operate? Is four watts an appropriate maximum power to permit for such operations or should a different maximum power level be permitted (*e.g.,* 10 watts or 16 watts EIRP)? Would mobile devices operating at higher power levels be able to comply with the Commission's RF safety requirements? Do the Commission need to specify how information on an area will be provided to the white space database? Are any other safeguards needed to ensure that higher power mobile devices do not cause harmful interference to protected operations, especially operations that are close to, but outside, the edge of a pre-cleared geo-fenced area? Are there concerns about coexistence between higher power mobile white space devices and other mobile or fixed white space devices? Is there a need to prohibit operation on board aircraft and satellites or any other mobile platforms such as trains and boats? Should the Commission limit operation of higher power mobile devices to less congested areas as we propose and as suggested by some commenters? Are any changes to the white space databases needed to permit the proposed operation?

39. *Narrowband IoT operations.* Fixed white space devices operating with four watts or greater EIRP must comply with a power spectral density (PSD) limit of 12.6 dBm per 100 kilohertz, which limits total conducted power within any 6-megahertz television channel to 30 dBm. The PSD limit is proportionally lower for devices operating at lower EIRP levels. The Commission established PSD limits to prevent multiple white space devices from operating at the maximum allowable power with transmit bandwidths less than six megahertz within a single television channel, which would result in a total transmitted power within that channel significantly greater than the limit. These PSD limits were calculated based upon a single white space device spreading its energy uniformly across a 6-megahertz television channel bandwidth. The limits serve to limit the maximum power of white space devices with bandwidths of less than 6-megahertz, *e.g.,* a white space device that operates with a bandwidth of half a television channel would be limited to

half the power of a device that operates across a full channel.

40. The Commission proposes to modify the white space rules to facilitate the deployment of narrowband IoT devices. TV band frequencies are better able to penetrate foliage and other obstacles than higher frequencies, thus providing improved transmission range for IoT devices. Specifically, we propose to define a ''narrowband white space device'' as a type of fixed or personal/portable white space device operating in a bandwidth of no greater than 100 kHz. We also propose that narrowband white space devices be client devices that communicate with a fixed or Mode II master device that contacts the white space database to obtain a list of available channels and operating powers at its location.

41. The Commission proposes to permit narrowband white space devices to operate with a conducted PSD of up to 12.6 dBm/100 kHz, which is the same level permitted for fixed devices that operate with the maximum permissible one-watt conducted power in a six megahertz channel, and to require narrowband devices to comply with the same maximum antenna gain requirements as fixed devices. The Commission further proposes to require narrowband white space devices to comply with an emission limit of −42.8 dBm into adjacent channels, *i.e.,* outside of the six-megahertz channel in which they operate. These proposed requirements will clarify that a white space device can operate with a single or several narrowband carriers rather than having to spread all of its energy across a six megahertz channel and will ensure that narrowband white space devices have no greater interference potential than wider bandwidth devices operating under the current rules. To ensure that the total energy in a single TV channels does not cause harmful interference, the Commission proposes to limit each transmitter to a total operation of ten seconds per hour. The Commission believes that this proposal will prevent narrowband IoT devices from being used for data intensive applications, including continuous transmissions, transmissions of audio and video or remote control of toys.

42. The Commission proposes to require narrowband devices to use a channel plan that limits total transmitted power in a six-megahertz channel to no higher than the existing limits for a four-watt EIRP broadband white space device. Specifically, we propose to require narrowband white space devices to operate at least 250 kilohertz from the edge of a six-megahertz TV channel, unless the adjacent channel is also vacant, and to permit narrowband white space devices to operate only on channels centered at integral multiples of 100 kHz between the 250 kHz guard bands. The net effect of these proposed requirements is that narrowband devices could operate within 55 possible 100-kilohertz channels in the center 5.5 megahertz of each six-megahertz channel. Even in the event that all 55 narrowband channels within a six-megahertz channel were occupied simultaneously by devices operating at maximum power, the maximum conducted and radiated power within that six-megahertz channel would be no greater than for a fixed device operating with one-watt conducted power and four watts EIRP.

43. The Commission seeks comment on these proposals. Is the proposed definition of narrowband white space device appropriate for the intended IoT applications? Should narrowband personal/portable devices be subject to lower emission limits than those proposed since the proposed limits are based on four-watt EIRP fixed devices? Is it necessary for the Commission to require a listen-before-talk spectrum access mechanism to prevent harmful interference to protected services in the TV bands? If the Commission were to require such a mechanism, what parameters would it need to specify, *e.g.,* monitoring threshold, monitoring time, receiver bandwidth, receive antenna specifications? If we require narrowband devices to operate as clients to a fixed device that contacts the white space database, is there a need to increase the minimum separation distances from co-channel and adjacent channel TV station contours as we require for personal/portable devices operating as clients? Are the proposed maximum PSD, out-of-band emission and antenna gain limits appropriate for narrowband devices? Is the proposed data transmission limit of ten seconds per hour necessary to prevent data intensive operations? Is a channelization plan necessary, and if so, is the proposed plan appropriate? Are any other revisions to the proposed rules appropriate to protect licensed wireless microphone operations given that such operations would be protected when registered in the white spaces database? Finally, are there any other revisions to the rules for narrowband operations that should be adopted to protect any other authorized service that operate in the TV bands from harmful interference by narrowband white space devices?

44. *Higher power on adjacent channels.* Among the requirements for white space device operations are that operations above 40 milliwatts EIRP must generally operate outside the protected contours of adjacent channel TV stations. That's because a strong signal on an adjacent channel can cause interference to the reception of a channel being viewed. The general requirement that all fixed white space devices avoid operation within adjacent channel protected contours means that, as a practical matter, a white space device may operate only at locations where there are three contiguous vacant channels, *i.e.,* the channel used by the white space device plus both adjacent channels. The Commission's rules do, however, provide an exception for operation of low power white space devices on adjacent channels because of the shorter distances at which interference to the adjacent channel TV station could occur. Specifically, fixed white space devices may operate within the protected contour of adjacent channel TV stations with a power level of 100 milliwatts EIRP when the white space device operates in a six-megahertz band centered on the boundary of two contiguous vacant channels, *i.e.,* 50 milliwatts within a three-megahertz band in each channel.

45. The Commission seeks comment on the ideas suggested by Microsoft and others to develop a record on this issue. Could more sophisticated computer models, such as Longley-Rice, be used to permit higher power unlicensed operations on adjacent channels? If so, how? Are they sufficiently precise to identify areas where the desired TV signal strength is sufficiently high that interference from adjacent channel white space devices is unlikely? What specific technical parameters would need to be considered or specified in such calculations, *e.g.,* desired TV signal strength, appropriate grid size for determining where interference could occur, desired-to-undesired signal ratios, white space device power and antenna height? Is there any information available on adjacent channel selectivity and interference rejection capabilities of next generation TV receivers, such as manufacturers' specifications or actual measurement results? Is there any indication that next generation TV receivers will in fact have better adjacent channel interference rejection than current receivers? The Commission notes that while some parties advocated for tighter out-of-band emission limits for white space devices, others believe that the current limits are already too stringent. Would tighter out-of-band emission limits for white space devices result in any reduction in the potential for interference to adjacent channel TV

reception? Are there other factors we can consider or steps that users or white space databases can take to provide for more widespread use of white space devices near or within the contour of first adjacent television channels? Commenters should provide technical detail and analysis supporting their position on this issue.

Procedural Matters

46. *Paperwork Reduction Act Analysis.* This document contains proposed new or modified information collection requirements. The Commission, as part of its continuing effort to reduce paperwork burdens, invites the general public and the Office of Management and Budget (OMB) to comment on the information collection requirements contained in this document, as required by the Paperwork Reduction Act of 1995, Public Law 104–13. In addition, pursuant to the Small Business Paperwork Relief Act of 2002, Public Law 107–198, *see* 44 U.S.C. 3506(c)(4), we seek specific comment on how we might further reduce the information collection burden for small business concerns with fewer than 25 employees.

47. *Initial Regulatory Flexibility Analysis.* As required by the Regulatory Flexibility Act, the Commission has prepared an Initial Regulatory Flexibility Analysis (IRFA) of the possible significant economic impact on a substantial number of small entities of the proposals addressed in this Notice. The Full IRFA is found in Appendix C at *https://docs.fcc.gov/public/attachments/FCC-20-17A1.pdf.* The Commission requests written public comment on the IRFA. Comments must be filed in accordance with the same filing deadlines as comments filed in response to the NPRM and must have a separate and distinct heading designating them as responses to the IRFA. The Commission's Consumer and Governmental Affairs Bureau, Reference Information Center, will send a copy of this Notice, including the IRFA, to the Chief Counsel for Advocacy of the Small Business Administration, in accordance with the Regulatory Flexibility Act.

48. *Filing Requirements.* Pursuant to §§ 1.415 and 1.419 of the Commission's rules, 47 CFR 1.415, 1.419, interested parties may file comments and reply comments on or before the dates indicated on the first page of this document. Comments may be filed using the Commission's Electronic Comment Filing System (ECFS). *See Electronic Filing of Documents in Rulemaking Proceedings,* 63 FR 24121 (1998).

- Electronic Filers: Comments may be filed electronically using the internet by accessing the ECFS: *http://www.fcc.gov/ecfs/.*
- Paper Filers: Parties who choose to file by paper must file an original and one copy of each filing. If more than one docket or rulemaking number appears in the caption of this proceeding, filers must submit two additional copies for each additional docket or rulemaking number.

Filings can be sent by hand or messenger delivery, by commercial overnight courier, or by first-class or overnight U.S. Postal Service mail. All filings must be addressed to the Commission's Secretary, Office of the Secretary, Federal Communications Commission.

- All hand-delivered or messenger-delivered paper filings for the Commission's Secretary must be delivered to FCC Headquarters at 445 12th St. SW, Room TW–A325, Washington, DC 20554. The filing hours are 8:00 a.m. to 7:00 p.m. All hand deliveries must be held together with rubber bands or fasteners. Any envelopes and boxes must be disposed of *before* entering the building.
- Commercial overnight mail (other than U.S. Postal Service Express Mail and Priority Mail) must be sent to 9050 Junction Drive, Annapolis Junction, MD 20701.
- U.S. Postal Service first-class, Express, and Priority mail must be addressed to 445 12th Street SW, Washington, DC 20554.

49. *People with Disabilities.* To request materials in accessible formats for people with disabilities (braille, large print, electronic files, audio format), send an email to *fcc504@fcc.gov* or call the Consumer & Governmental Affairs Bureau at 202–418–0530 (voice), 202–418–0432 (tty).

50. *Additional Information.* For additional information on this proceeding, contact Hugh L. Van Tuyl, *Hugh.VanTuyl@fcc.gov,* (202) 418–7506.

Ordering Clauses

51. *It is ordered,* pursuant to the authority found in sections 4(i), 201, 302, and 303 of the Communications Act of 1934, as amended, 47 U.S.C. 154(i), 201, 302a, 303, and §§ 1.407 and 1.411 of the Commission's Rules, 47 CFR 1.407 and 1.411, that this *Notice of Proposed Rulemaking is hereby adopted.* The petition for rulemaking of Microsoft Corporation, ET Docket No. 14–165 and RM–11840, is hereby *granted* to the extent discussed herein, and shall be consolidated into ET Docket No. 20–36.

52. *It is further ordered* that *notice is hereby given* of the proposed regulatory changes described in this *Notice of Proposed Rulemaking,* and that comment is sought on these proposals.

53. *It is further ordered* that the Commission's Consumer and Governmental Affairs Bureau, Reference Information Center, *shall send* a copy of this *Notice of Proposed Rulemaking,* including the Initial Regulatory Flexibility Analysis, to the Chief Counsel for Advocacy of the Small Business Administration.

List of Subjects in 47 CFR Part 15

Communications equipment and Reporting recordkeeping requirements.

Federal Communications Commission.

Cecilia Sigmund,

Federal Register Liaison Officer, Office of the Secretary.

Proposed Rules

For the reasons discussed in the preamble, the Federal Communications Commission proposes to amend 47 CFR part 15 as follows:

Part 15 of Title 47 of the Code of Federal Regulations is proposed to be amended as follows:

PART 15—RADIO FREQUENCY DEVICES

The authority citation for part 15 continues to read as follows:

Authority: 47 U.S.C. 154, 302a, 303, 304, 307, 336, 544a, and 549.

■ 1. Amend § 15.703 by removing the paragraph designations and adding a new definition in alphabetical order to read as follows:

§ 15.703 Definitions.

* * * * *

Narrowband white space device. A fixed or personal/portable white space device operating in a bandwidth of no greater than 100 kHz.

* * * * *

■ 2. Amend § 15.707 by adding paragraph (c) to read as follows:

§ 15.707 Permissible channels of operation.

* * * * *

(c) Narrowband white space devices may only operate on frequencies below 608 MHz.

■ 3. Amend § 15.709 by:

■ a. Revising paragraphs (a)(2), (b)(1)(ii) and (iii),

■ b. Adding paragraph (b)(4) and

■ c. Revising paragraphs (c)(2) and (g)(1)(ii).

The additions and revisions read as follows:

§ 15.709 General technical requirements.

(a) * * *

(2) *TV bands and 600 MHz service band.* (i) (A) Fixed devices in the TV bands below 602 MHz: Up to 4 W (36 dBm) EIRP, and up to 16 W (42 dBm) EIRP in less congested areas. Fixed devices in the 602–608 MHz band may operate with up to 4 W (36 dBm) EIRP.

(B) Fixed devices in the 600 MHz service bands above 620 MHz: Up to 4 W (36 dBm) EIRP, and up to 10 W (40 dBm) EIRP in less congested areas. Fixed devices that operate in any portion of the 614–620 MHz band may operate with up to 4 W (36 dBm) EIRP.

* * * * *

(b) * * *

(1) * * *

(ii) For operation at EIRP levels of 36 dBm (4,000 mW) or less, fixed white space devices may operate at EIRP levels between the values shown in the table in paragraph (b)(1)(iii) of this section provided that the conducted power and the conducted power spectral density (PSD) limits are linearly interpolated between the values shown and the adjacent channel emission limit of the higher value shown in the table is met. Operation at EIRP levels above 36 dBm (4000 mW) but not greater than 40 dBm (10,000 mW) shall follow the requirements for 40 dBm (10,000 mW). Operation at EIRP levels above 40 dBm (10,000 mW) shall follow the requirements for 42 dBm (16,000 mW).

(iii) The conducted power spectral density from a fixed white space device shall not be greater than the values shown in the table in this paragraph (b)(1)(iii) when measured in any 100 kHz band during any time interval of continuous transmission.

TABLE 1 TO PARAGRAPH (b)(1)(iii)

EIRP (6 MHz)	Conducted power limit (6 MHz)	Conducted PSD limit [1] (100 kHz)	Conducted adjacent channel emission limit (100 kHz)
16 dBm (40 mW)	10 dBm (10 mW)	−7.4 dBm	−62.8 dBm.
20 dBm (100 mW)	14 dBm (25 mW)	−3.4 dBm	−58.8 dBm.
24 dBm (250 mW)	18 dBm (63 mW)	0.6 dBm	−54.8 dBm.
28 dBm (625 mW)	22 dBm (158 mW)	4.6 dBm	−50.8 dBm.
32 dBm (1600 mW)	26 dBm (400 mW)	8.6 dBm	−46.8 dBm.
36 dBm (4000 mW)	30 dBm (1000 mW)	12.6 dBm	−42.8 dBm.
40 dBm (10000 mW)	30 dBm (1000 mW)	12.6 dBm	−42.8 dBm.
42 dBm (16000 mW)	30 dBm (1000 mW)	12.6 dBm	−42.8 dBm.

* * * * *

(4) *Narrowband white space devices.*

(i) Narrowband white space devices shall operate on channel sizes that are no more than 100 kHz. The edge of a narrowband channel shall be offset from the upper and lower edge of the 6 MHz channel in which it operates by at least 250 kHz, except in the case where bonded 6 MHz channels share a common band edge. Narrowband channels of operation shall be at integral multiples of 100 kHz beginning at a 250 kHz offset from a 6 MHz channel's edge, or with no offset at the common band edge of two bonded 6 MHz channels.

(ii) The conducted power limit is 12.6 dBm in a 100 kHz segment. The EIRP limit is 18.6 dBm in a 100 kHz segment. The conducted power spectral density limit is 12.6 dBm in any 100 kHz band during any time interval of continuous transmission.

(iii) Conducted adjacent channel emissions shall be limited to −42.8 dBm in 100 kHz in a first adjacent 6 MHz channel, starting at the edge of the 6 MHz channel within which the narrowband device is operating. This limit shall not apply between the edge of the narrowband channel and the edge of the 6 MHz channel that contains it.

(iv) If transmitting antennas of directional gain greater than 6 dBi are used, the maximum conducted power output shall be reduced by the amount in dB that the directional gain of the antenna exceeds 6 dBi.

(v) Total channel occupancy shall be limited to 10 seconds per hour.

(c) * * *

(2) The conducted power, PSD and adjacent channel limits for fixed white space devices operating at greater than 36 dBm (4000 milliwatts) EIRP shown in the table in paragraph (b)(1) of this section are based on a maximum transmitting antenna gain of 12 dBi. If transmitting antennas of directional gain greater than 12 dBi are used, the maximum conducted output power shall be reduced by the amount in dB that the directional gain of the antenna exceeds 12 dBi.

* * * * *

(g) * * *

(1) * * *

(ii) *Height above average terrain (HAAT).* For operation in the 602–608 MHz band and the 600 MHz service bands, the transmit antenna shall not be located where its height above average terrain exceeds 250 meters. For operation in the TV bands below 602 MHz, the transmit antenna shall not be located where its height above average terrain exceeds 250 meters generally, or 500 meters in less congested areas. The HAAT is to be calculated by the white space database using the methodology in § 73.684(d) of this chapter. For HAAT greater than 250 meters the following coordination procedures are required:

(A) The installing party must contact a white space database and identify all TV broadcast station contours that would be potentially affected by operation at the planned HAAT and EIRP. A potentially affected TV station is one where the protected service contour would be within the applicable separation distance if the white space device was operating at a HAAT of 50 meters above the planned height at the proposed power level.

(B) The installing party must notify each of these licensees and provide the geographic coordinates of the white space device, relevant technical parameters of the proposed deployment, and contact information.

(C) No earlier than 48 hours after this notification, the installing party may commence operations.

(D) Upon request, the installing party must provide each potentially affected licensee with information on the time periods of operations.

(E) If the installing party seeks to modify its operations by increasing its power level, by moving more than 100 meters horizontally from its location, or by making an increase in the HAAT or EIRP of the white space device that results in an increase in the minimum required separation distances from co-channel or adjacent channel TV station contours, it must conduct a new coordination.

* * * * *

■ 4. Amend § 15.711 by adding paragraph (c)(3) to read as follows:

§ 15.711 Interference avoidance methods.

* * * * *

(c) * * *

(3) A Mode II device installed on a movable platform in less congested areas may load channel availability information for multiple locations in the vicinity of its current location. It may use that information to define a geographic area within which it can operate on the same available channels at all locations. A device may not use channel availability information for multiple locations if/when it moves within 1.6 km of the boundary of the area where the channel availability data is valid, or outside that boundary. The location must be checked at least once every 60 seconds while the white space device is in operation except while in sleep mode, *i.e.,* in a mode in which the device is inactive but is not powered-down. Operation on board aircraft or satellites is prohibited.

* * * * *

■ 5. Amend § 15.712 by:

■ a. Revising the introductory text and paragraphs (a)(2), (b)(3)(ii) and (iii),

■ b. Adding new paragraphs (b)(3)(iv);

■ c. Revising paragraph (c)(2)(ii);

■ d. Adding paragraph (c)(2)(iii) and

■ e. Revising paragraphs (d), (f), and (i)(1)

The additions and revisions read as follows:

§ 15.712 Interference protection requirements.

The separation distances in this section apply to fixed and personal/portable white space devices with a location accuracy of ±50 meters. These distances must be increased by the amount that the location uncertainty of a white space device exceeds ±50 meters. Narrowband white space devices shall comply with the separation distances applicable to a fixed white space device operating with 30 dBm conducted power and 36 dBm EIRP across a 6 MHz channel.

(a) * * *

(2) *Required separation distance.* White space devices must be located outside the contours indicated in paragraph (a)(1) of this section of co-channel and adjacent channel stations by at least the minimum distances specified in the tables in paragraph (a)(2)(v).

(i) If a device operates between two defined power levels, it must comply with the separation distances for the higher power level.

(ii) White space devices operating at 40 mW EIRP or less are not required to meet the adjacent channel separation distances.

(iii) Fixed white space devices operating at 100 mW EIRP or less per 6 megahertz across multiple contiguous TV channels with at least 3-megahertz separation between the frequency band occupied by the white space device and adjacent TV channels are not required to meet the adjacent channel separation distances.

(iv) Fixed white space devices may only operate above 4 W EIRP in less congested areas as defined in § 15.703.

(v) The following are the tables of minimum required separation distances outside the contours of co-channel and adjacent channel stations that white space devices must meet.

TABLE 2 TO SECTION 15.712(a)(2)(v)

Mode II personal/portable white space devices	Required separation in kilometers from co-channel digital or analog TV (full service or low power) protected contour	
	16 dBm (40 mW)	20 dBm (100 mW)
Communicating with Mode II or Fixed device	1.3	1.7
Communicating with Mode I device	2.6	3.4

TABLE 3 TO SECTION 15.712(a)(2)(v)

Fixed white space devices								
Antenna height above average terrain of unlicensed devices (meters)	Required separation in kilometers from co-channel digital or analog TV (full service or low power) protected contour *							
	16 dBm (40 mW)	20 dBm (100 mW)	24 dBm (250 mW)	28 dBm (625 mW)	32 dBm (1600 mW)	36 dBm (4 W)	40 dBm (10 W)	42 dBm (16 W)
Less than 3	1.3	1.7	2.1	2.7	3.3	4.0	4.5	5.0
3–10	2.4	3.1	3.8	4.8	6.1	7.3	8.5	9.4
10–30	4.2	5.1	6.0	7.1	8.9	11.1	13.9	15.3
30–50	5.4	6.5	7.7	9.2	11.5	14.3	19.1	20.9
50–75	6.6	7.9	9.4	11.1	13.9	18.0	23.8	26.2
75–100	7.7	9.2	10.9	12.8	17.2	21.1	27.2	30.1
100–150	9.4	11.1	13.2	16.5	21.4	25.3	32.3	35.5
150–200	10.9	12.7	15.8	19.5	24.7	28.5	36.4	39.5
200–250	12.1	14.3	18.2	22.0	27.3	31.2	39.5	42.5
250–300	13.9	16.4	20.0	23.9	29.4	35.4	42.1	45.9
300–350	15.3	17.9	21.7	25.7	31.4	37.6	44.5	48.4
350–400	16.6	19.3	23.2	27.3	33.3	39.7	46.9	51.0
400–450	17.6	20.4	24.4	28.7	35.1	41.9	49.4	53.8
450–500	18.3	21.4	25.5	30.1	36.7	43.7	51.4	55.9

* When communicating with Mode I personal/portable white space devices, the required separation distances must be increased beyond the specified distances by 1.3 kilometers if the Mode I device operates at power levels no more than 40 mW EIRP or 1.7 kilometers if the Mode I device operates at power levels above 40 mW EIRP.

TABLE 4 TO SECTION 15.712(a)(2)(v)

Personal/portable white space devices	
	Required separation in kilometers from adjacent channel digital or analog TV (full service or low power) protected contour
	20 dBm (100 mW)
Communicating with Mode II or Fixed device	0.1
Communicating with Mode I device	0.2

TABLE 5 TO SECTION 15.712(a)(2)(v)

Fixed white space devices							
Antenna height above average terrain of unlicensed devices (meters)	Required separation in kilometers from adjacent channel digital or analog TV (full service or low power) protected contour*						
	20 dBm (100 mW)	24 dBm (250 mW)	28 dBm (625 mW)	32 dBm (1600 mW)	36 dBm (4 W)	40 dBm (10 W)	42 dBm (16 W)
Less than 3	0.1	0.1	0.1	0.1	0.2	0.2	0.3
3–10	0.1	0.2	0.2	0.2	0.3	0.4	0.5
10–30	0.2	0.3	0.3	0.4	0.5	0.6	0.7
30–50	0.3	0.3	0.4	0.5	0.7	0.8	1.0
50–75	0.3	0.4	0.5	0.7	0.8	0.9	1.0
75–100	0.4	0.5	0.6	0.8	1.0	1.1	1.3
100–150	0.5	0.6	0.8	0.9	1.2	1.3	1.5
150–200	0.5	0.7	0.9	1.1	1.4	1.5	1.7
200–250	0.6	0.8	1.0	1.2	1.5	1.7	1.9
250–300	0.7	0.8	1.0	1.3	1.6	2.1	2.3
300–350	0.7	0.9	1.1	1.4	1.8	2.2	2.4
350–400	0.8	1.0	1.2	1.5	1.9	2.4	2.7
400–450	0.8	1.0	1.3	1.6	2.1	2.6	2.9
450–500	0.8	1.1	1.4	1.7	2.1	2.7	2.9

*When communicating with a Mode I personal/portable white space device that operates at power levels above 40 mW EIRP, the required separation distances must be increased beyond the specified distances by 0.1 kilometers.

(3) *Fixed white space device antenna height.* Fixed white space devices must comply with the requirements of § 15.709(g) of this part.

* * * * *

(b) * * *

(3) * * *

(ii) White space devices operating with more than 4 watts EIRP and up to 10 watts EIRP may not operate within 10.2 kilometers from the receive site for co-channel operation and 2.5 kilometers from the receive site for adjacent channel operation.

(iii) White space devices operating with more than 10 watts EIRP may not operate within 16.6 kilometers from the receive site for co-channel operation and 3.5 kilometers from the receive site for adjacent channel operation.

(iv) For purposes of this section, a TV station being received may include a full power TV station, TV translator station or low power TV/Class A TV station.

(c) * * *

(2) * * *

(ii) White space devices operating with more than 4 watts EIRP and up to 10 watts EIRP may not operate within 10.2 km from the receive site for co-channel operation and 2.5 km from the receive site for adjacent channel operation.

(iii) White space devices operating with more than 10 watts EIRP may not operate within 16.6 kilometers from the receive site for co-channel operation and 3.5 kilometers from the receive site for adjacent channel operation.

(d) *PLMRS/CMRS operations.* (1) White space devices may not operate at distances less than those specified in the table below from the coordinates of the metropolitan areas and on the channels listed in § 90.303(a) of this chapter.

TABLE 6 TO SECTION 15.712(d)(1)

White space device transmitter power	Required separation in kilometers from areas specified in § 90.303(a) of this chapter	
	Co-channel operation	Adjacent channel operation
4 watts EIRP or less	134	131
Greater than 4 watts and less than 10 watts EIRP	136	131.5

TABLE 6 TO SECTION 15.712(d)(1)—Continued

White space device transmitter power	Required separation in kilometers from areas specified in § 90.303(a) of this chapter	
	Co-channel operation	Adjacent channel operation
Greater than 10 watts EIRP	139.2	132.2

(2) White space devices may not operate at distances less than those specified in the table below from PLMRS/CMRS operations authorized by waiver outside of the metropolitan areas listed in § 90.303(a) of this chapter.

TABLE 7 TO SECTION 15.712(d)(2)

White space device transmitter power	Required separation in kilometers from areas specified in § 90.303(a) of this chapter	
	Co-channel operation	Adjacent channel operation
4 watts EIRP or less	54	51
Greater than 4 watts and less than 10 watts EIRP	56	51.5
Greater than 10 watts EIRP	59.2	52.2

* * * * *

(f) *Low power auxiliary services, including wireless microphones.* White space devices are not permitted to operate within the following distances of the coordinates of registered low power auxiliary station sites on the registered channels during the designated times they are used by low power auxiliary stations.

(1) Fixed white space devices with 10 watts EIRP or less: 1 kilometer

(2) Fixed white space devices with greater than 10 watts EIRP: 1.3 kilometers

(3) Personal/portable white space devices: 400 meters

* * * * *

(i) * * *

(1) Fixed white space devices may only operate above 4 W EIRP in less congested areas as defined in § 15.703.

* * * * *

[FR Doc. 2020–06569 Filed 4–2–20; 8:45 am]

BILLING CODE 6712–01–P

Notices

Federal Register

Vol. 85, No. 65

Friday, April 3, 2020

This section of the FEDERAL REGISTER contains documents other than rules or proposed rules that are applicable to the public. Notices of hearings and investigations, committee meetings, agency decisions and rulings, delegations of authority, filing of petitions and applications and agency statements of organization and functions are examples of documents appearing in this section.

DEPARTMENT OF AGRICULTURE

Office of the Secretary

Fiscal Year 2020 Tariff-Rate Quotas Increased for Raw Cane Sugar and Refined Sugar

AGENCY: Office of the Secretary, USDA.

ACTION: Notice.

SUMMARY: The Office of the Secretary of the U.S. Department of Agriculture (the Secretary) is providing notice of an increase in the fiscal year (FY) 2020 sugar tariff-rate quotas (TRQs) of 317,515 metric tons raw value (MTRV) for raw cane sugar, and 181,437 MTRV for refined sugar.

DATES: This notice is applicable on April 3, 2020.

ADDRESSES: Multilateral Affairs Division, Trade Policy and Geographic Affairs, Foreign Agricultural Service, U.S. Department of Agriculture, Stop 1070, 1400 Independence Avenue SW, Washington, DC 20250–1070.

FOR FURTHER INFORMATION CONTACT: Souleymane Diaby, (202) 720–2916, *Souleymane.Diaby@usda.gov.*

SUPPLEMENTARY INFORMATION: On June 27, 2019, the Secretary established the FY 2020 TRQ for raw cane sugar at 1,117,195 MTRV, the minimum to which the United States is committed under the World Trade Organization (WTO) Uruguay Round Agreements. Pursuant to Additional U.S. Note 5 to Chapter 17 of the U.S. Harmonized Tariff Schedule (HTS) and Section 359k of the Agricultural Adjustment Act of 1938, as amended, the Secretary has authority to modify the raw and refined sugar WTO TRQs. The Secretary gives notice today of an increase in the quantity of raw cane sugar eligible to enter at the lower rate of duty during FY 2020 by 317,515 MTRV. The conversion factor is 1 metric ton raw value equals 1.10231125 short tons raw value. With this increase, the overall FY 2020 raw sugar TRQ is now 1,434,710 MTRV. Raw cane sugar under this quota must be accompanied by a certificate for quota eligibility and may be entered until September 30, 2020. The Office of the U.S. Trade Representative (USTR) will allocate this increase among supplying countries and customs areas.

On June 27, 2019, USDA established the FY 2020 refined sugar TRQ at an aggregate quantity of 192,000 MTRV, of which 20,344 MTRV was reserved for refined sugar other than specialty sugar. On July 15, 2019, USTR allocated this refined sugar TRQ as follows: 10,300 MTRV to Canada; 2,954 MTRV to Mexico; 7,090 MTRV to be administered on a first-come, first-served basis; and 171,656 MTRV for specialty sugar. Today, the Secretary announces an increase in the fiscal year (FY) 2020 refined sugar TRQ of 181,437 MTRV, to a total of 373,437 MTRV. USTR will allocate this refined sugar TRQ increase. Only refined sugar with a sucrose content, by weight in the dry state, corresponding to a reading of 99.5 degrees polarity or more will be permitted.

These actions are being taken after a determination that additional supplies of raw cane and refined sugar are required in the U.S. market. USDA will closely monitor stocks, consumption, imports and all sugar market and program variables on an ongoing basis and may make further program adjustments during FY 2020 if needed.

Ted McKinney,

Under Secretary, Trade and Foreign Agricultural Affairs.

[FR Doc. 2020–07164 Filed 4–1–20; 4:15 pm]

BILLING CODE 3410–10–P

ARCHITECTURAL AND TRANSPORTATION BARRIERS COMPLIANCE BOARD

[Docket No. ATBCB–2020–0003]

Proposed Renewal of Information Collection; Online Architectural Barriers Act (ABA) Complaint Form

AGENCY: Architectural and Transportation Barriers Compliance Board.

ACTION: Notice and request for comments.

SUMMARY: In accordance with the Paperwork Reduction Act, the Architectural and Transportation Barriers Compliance Board (Access Board) invites comment on the proposed extension of its existing information collection titled, ''Online Architectural Barriers Act (ABA) Complaint Form.'' (OMB Control No. 3014–0012). The information collection is scheduled to expire on August 31, 2020, and we propose to continue using the instrument for an additional three years.

DATES: Submit comments by June 2, 2020.

ADDRESSES: You may submit comments, by any of the following methods:

- Federal eRulemaking Portal *http://www.regulations.gov.* Follow the directions for sending comments.
- *Email: damiani@access-board.gov.* Include ATBCB–2020–0003 in the subject line of the message.
- *Fax:* 202–272–0081.
- *Mail or Hand Delivery/Courier:* Mario Damiani, Office of General Counsel, U.S. Access Board, 1331 F Street NW, Suite 1000, Washington, DC 20004–1111.

Instructions: All submissions received must include the agency name and docket number for this Notice (identified by ATBCB–2020–0003). All comments received, including any personal information provided, will be posted without change to *http://www.regulations.gov.* For this reason, please do not include information of a confidential nature in your comments, such as sensitive personal or proprietary information.

FOR FURTHER INFORMATION CONTACT: Mario Damiani, Office of General Counsel, U.S. Access Board, 1331 F Street NW, Suite 1000, Washington, DC 20004–1111. Phone: 202–272–0050 (voice); 202–272–0064 (TTY). Email: *damiani@access-board.gov.*

SUPPLEMENTARY INFORMATION: Under the Paperwork Reduction Act of 1995 (PRA) (44 U.S.C. 3501 *et seq.*), and its implementing regulations (5 CFR part 1320), Federal agencies must obtain approval from the Office of Management and Budget (OMB) for each collection of information they conduct or sponsor. ''Collection of information,'' within the meaning of the PRA, includes agency requests that pose identical questions to, or impose reporting or recording keeping obligations on ten or more persons regardless of whether response to such request is mandatory or

voluntary. See 5 CFR 1320.3(c); see also 44 U.S.C. 3502(3). Before seeking clearance from OMB, agencies are generally required, among other things, to publish a 60-day notice in the **Federal Register** concerning any proposed information collection—including extension of a previously-approved collection—and provide an opportunity for comment. See 44 U.S.C. 3506(c)(2)(A); 5 CFR 1320.8(d)(1).

To comply with this requirement, the Access Board is publishing this 60-day notice for the proposed renewal of this information collection. OMB's approval of the current version of the Access Board's Online Architectural Barriers Act (ABA) Complaint Form is set expire in August 2020. See 81 FR 85,926 (Nov. 29, 2016) (30-day notice); *see also* 81 FR 48,739 (July 26, 2016) (60-day notice).

OMB Control Number: 3014–0012.

Title: Online Architectural Barriers Act (ABA) Complaint Form.

Type of Review: Extension of a currently approved information collection.

Abstract: The Access Board is statutorily charged with enforcing the ABA through, among other things, investigation of complaints from members of the public concerning the accessibility of covered buildings or facilities, namely—those owned or leased by the Federal government, as well as those constructed or altered using Federal funds from grants or loans. See 29 U.S.C. 792(b)(1), (e). At present, over 90% of individuals elect to submit their ABA complaints using the Online ABA Complaint Form; the remainder are submitted in writing, without the need to use a hard-copy complaint form, by email, regular mail, or fax.

By this notice, the Access Board is proposing to continue using essentially the same Online ABA Complaint Form for another three years. We propose to make formatting-type changes only that will update the ''look and feel'' of the online form; we do not anticipate making any material, substantive revisions.

In sum, the Online ABA Complaint Form seeks information needed by the Access Board to investigate complaints and, if desired, contact the complainant. Mandatory fields are: Name and location (by city and state) of the building/facility at issue and description of accessibility barrier(s). Optional fields include the building/facility address and the complainant's name; and contact information. (Where provided, a complainant's identity and other personal information may not be disclosed outside the agency without his or her written permission.) Individuals may also upload electronic attachments (*e.g.,* pictures, drawings) relevant to their complaint, if desired. Once a complaint is submitted, the system automatically provides confirmation of successful submission, a complaint number, and the option to print a copy of the submitted complaint. Complainants who elect to provide an email address as part of their contact information also receive an automatically generated confirmation email.

Description of Respondents: Individual members of the public.

Estimated Total Annual Number of Responses: Approximately 185 individuals submit complaints using the Online ABA Complaint Form each year.

Estimated Frequency of Response: Occasional. Complainants submit one complaint for each building or facility at which they noted accessibility barriers, regardless of the number of barriers encountered.

Estimated Time Burden per Response: On average, about 30 minutes per online complaint; the time burden may vary depending on the number of accessibility barriers identified in a complaint. There is no financial burden to complainants.

Estimated Total Annual Burden Hours: Approximately 93 hours.

Request for Comment: Comments are invited on: (a) Whether the proposed collection of information is necessary for the Access Board's performance; (b) the accuracy of the estimated burden; (c) ways for the Access Board to enhance the quality, utility, and clarity of the information collection; and (d) ways that the burden could be minimized without reducing the quality of the collected information. Comments will be summarized and included in our request for OMB's approval of renewal of our existing generic clearance.

David M. Capozzi,

Executive Director.

[FR Doc. 2020–06952 Filed 4–2–20; 8:45 am]

BILLING CODE 8150–01–P

COMMISSION ON CIVIL RIGHTS

Agenda and Notice of Public Meeting of the Rhode Island Advisory Committee

AGENCY: Commission on Civil Rights.

ACTION: Announcement of meetings.

SUMMARY: Notice is hereby given, pursuant to the provisions of the rules and regulations of the U.S. Commission on Civil Rights (Commission), and the Federal Advisory Committee Act (FACA), that a planning meeting of the Rhode Island State Advisory Committee to the Commission will convene by conference call, on Monday, April 13, 2020 at 4:00 p.m. (EDT). The purpose of the meeting is to continue planning on its licensing project.

DATES: Monday, April 13, 2020 at 4:00 p.m. (EDT).

Public Call-In Information: Conference call number: 2576278 and conference call ID: 1–800–458–4121.

FOR FURTHER INFORMATION CONTACT: Evelyn Bohor, at *ero@usccr.gov* or by phone at 202–376–7533.

SUPPLEMENTARY INFORMATION: Interested members of the public may listen to the discussion by calling the following toll-free conference call number: 2576278 and conference call ID: 1–800–458–4121. Please be advised that before placing them into the conference call, the conference call operator may ask callers to provide their names, their organizational affiliations (if any), and email addresses (so that callers may be notified of future meetings). Callers can expect to incur charges for calls they initiate over wireless lines, and the Commission will not refund any incurred charges. Callers will incur no charge for calls they initiate over land-line connections to the toll-free telephone number herein.

Persons with hearing impairments may also follow the discussion by first calling the Federal Relay Service at 1–800–877–8339 and providing the operator with the toll-free conference call number: 2576278 and conference call ID: 1–800–458–4121.

Members of the public are invited to submit written comments; the comments must be received in the regional office approximately 30 days after each scheduled meeting. Written comments may be mailed to the Eastern Regional Office, U.S. Commission on Civil Rights, 1331 Pennsylvania Avenue, Suite 1150, Washington, DC 20425, or emailed to Evelyn Bohor at *ero@usccr.gov.* Persons who desire additional information may contact the Eastern Regional Office at (202) 376–7533.

Records and documents discussed during the meeting will be available for public viewing as they become available at *https://gsageo.force.com/FACA/apex/FACAPublicCommittee?id=a10t0000001gzm4AAA;* click the ''Meeting Details'' and ''Documents'' links. Records generated from this meeting may also be inspected and reproduced at the Eastern Regional Office, as they become available, both before and after the meetings. Persons interested in the work of this advisory committee are advised

to go to the Commission's website, *www.usccr.gov,* or to contact the Eastern Regional Office at the above phone number, email or street address.

Agenda: Monday, April 13, 2020 at 4:00 p.m. (EDT)

I. Roll Call
II. Leadership Changes: Chair and Designated Federal Official
III. Project Planning on Licensing
IV. Open Comment
V. Adjournment

Dated: March 30, 2020.

David Mussatt,

Supervisory Chief, Regional Programs Unit.

[FR Doc. 2020–06951 Filed 4–2–20; 8:45 am]

BILLING CODE P

DEPARTMENT OF COMMERCE

International Trade Administration

[A–570–047]

Certain Carbon and Alloy Steel Cut-To-Length Plate From the People's Republic of China: Preliminary Intent To Rescind Antidumping Duty Administrative Review; 2018–2019

AGENCY: Enforcement and Compliance, International Trade Administration, Department of Commerce.

SUMMARY: The Department of Commerce (Commerce) preliminarily determines that Jiangsu Tiangong Tools Company LTD (TG Tools) did not make a *bona fide* sale of certain carbon and alloy steel cut-to-length plate (CTL plate) from the People's Republic of China (China) during the period of review (POR) March 1, 2018 through February 28, 2019. Therefore, Commerce preliminarily intends to rescind this administrative review. Interested parties are invited to comment on this preliminary rescission of review.

DATES: Applicable April 3, 2020.

FOR FURTHER INFORMATION CONTACT: Hannah Falvey or Matthew Renkey, AD/CVD Operations, Office V, Enforcement and Compliance, International Trade Administration, U.S. Department of Commerce, 1401 Constitution Avenue NW, Washington, DC 20230; telephone: (202) 482–4889 or (202) 482–2312, respectively.

SUPPLEMENTARY INFORMATION:

Background

On May 29, 2019, Commerce initiated an administrative review of the antidumping duty order on CTL plate from China in accordance with section 751(a) of the Tariff Act of 1930, as amended (the Act), with respect to TG Tools as the sole mandatory respondent in this review.[1]

On November 12, 2019, pursuant to section 751(a)(3)(A) of the Act, Commerce determined that it was not practicable to complete the preliminary results of this review within the 245 days and extended the preliminary results by 117 days.[2] The revised deadline for the preliminary results in this review is now March 27, 2020.

Scope of the Order

The merchandise subject to this order is certain carbon and alloy steel hot-rolled or forged flat plate products not in coils, whether or not painted, varnished, or coated with plastics or other non-metallic substances (cut-to-length plate). For a full description of the scope, *see* the Preliminary Decision Memorandum.[3]

China-Wide Entity

Commerce's policy regarding conditional review of the China-wide entity applies to this administrative review.[4] Under this policy, the China-wide entity will not be under review unless a party specifically requests, or Commerce self-initiates, a review of the entity. Because no party requested a review of the China-wide entity in this review, the entity is not under review, and the entity's rate (*i.e.,* 68.27 percent) is not subject to change.[5]

Methodology

Commerce is conducting this review in accordance with section 751(a)(1)(B) of the Act. For a full description of the methodology underlying our conclusions, *see* the Preliminary Decision Memorandum. A list of the topics included in the Preliminary Decision Memorandum is included as an appendix to this notice. The Preliminary Decision Memorandum is a public document and is made available to the public via Enforcement and Compliance's Antidumping and Countervailing Duty Centralized Electronic Service System (ACCESS). ACCESS is available to registered users at *https://access.trade.gov,* and it is available to all parties in the Central Records Unit, room B8024 of the main Commerce building. The signed and electronic versions of the Preliminary Decision Memorandum are identical in content.

Preliminary Rescission of the Administrative Review

As discussed in the Preliminary Decision Memorandum and as expounded upon in the *Bona Fides* Memorandum, Commerce preliminarily finds that the sale made by TG Tools serving as the basis for this review is not a *bona fide* sale of CTL plate.[6] Commerce reached this conclusion based on the totality of the record information surrounding TG Tools' reported sale, including, but not limited to, the sales price and quantity, the profitability of the resold subject merchandise, the limited number of sales (*i.e.,* one sale), the trial nature of the sale, the comparison to the subsequent sales after the POR, and the likelihood of future sales.

Because the non-*bona fide* sale was the only reported sale of subject merchandise during the POR, we find that TG Tools had no reviewable transactions during this POR. Accordingly, we preliminarily intend to rescind this administrative review.[7] The factual information used in our *bona fides* analysis of TG Tools' sale involves business proprietary information. *See* the *Bona Fides* Memorandum for a full discussion of the basis for our preliminary findings.

Public Comment

Interested parties are invited to comment on the preliminary results and may submit case briefs and/or written comments, filed electronically using ACCESS, within 30 days of the date of publication of this notice, pursuant to 19 CFR 351.309(c)(1)(ii). Rebuttal briefs, limited to issues raised in the case briefs, will be due seven days after the due date for case briefs, pursuant to 19 CFR 351.309(d).[8] Parties who submit

[1] *See Certain Carbon and Alloy Steel Cut-to-Length Plate from the People's Republic of China: Antidumping Duty Order,* 82 FR 14349 (March 20, 2017) *(Order); see also Initiation of Antidumping and Countervailing Duty Administrative Reviews,* 84 FR 24743 (May 29, 2019).

[2] *See* Memorandum, ''Certain Carbon and Alloy Steel Cut-To-Length Plate from the People's Republic of China: Extension of Deadline for Preliminary Results of Antidumping Duty Administrative Review,'' dated November 12, 2019.

[3] *See* Memorandum, ''Decision Memorandum for the Preliminary Results of the Antidumping Duty Administrative Review of Certain Carbon and Alloy Steel Cut-To-Length Plate from the People's Republic of China; 2018–2019,'' dated concurrently with, and hereby adopted by, this notice (Preliminary Decision Memorandum).

[4] *See Antidumping Proceedings: Announcement of Change in Department Practice for Respondent Selection in Antidumping Duty Proceedings and Conditional Review of the Nonmarket Economy Entity in NME Antidumping Duty Proceedings,* 78 FR 65963 (November 4, 2013).

[5] *See Order,* 82 FR at 14352.

[6] *See* Memorandum, ''Preliminary *Bona Fide* Sales Analysis,'' dated concurrently with this notice (*Bona Fides* Memorandum).

[7] *See* 19 CFR 351.213(d)(3).

[8] *See Temporary Rule Modifying AD/CVD Service Requirements Due to COVID–19,* 85 FR 17006 (March 26, 2020).

case or rebuttal briefs in this review are requested to submit with each argument a statement of the issue, a summary of the argument not to exceed five pages, and a table of statutes, regulations, and cases cited, in accordance with 19 CFR 351.309(c)(2).

Pursuant to 19 CFR 351.309(c)(2) and (d)(2), parties who submit case briefs or rebuttal briefs in this proceeding are encouraged to submit with each argument: (1) A statement of the issue; (2) a brief summary of the argument; and (3) a table of authorities. Note that Commerce has temporarily modified certain of its requirements for serving documents containing business proprietary information, until May 19, 2020, unless extended.

Pursuant to 19 CFR 351.310(c), interested parties who wish to request a hearing must submit a written request to the Assistant Secretary for Enforcement and Compliance, filed electronically via ACCES. An electronically-filed document must be received successfully in its entirety by 5:00 p.m. Eastern Time within 30 days after the date of publication of this notice. Requests should contain: (1) The party's name, address and telephone number; (2) the number of participants; (3) whether any participant is a foreign national; and (4) a list of issues parties intend to discuss. Issues raised in the hearing will be limited to those raised in the respective case and rebuttal briefs.[9] If a request for a hearing is made, Commerce intends to hold the hearing at the U.S. Department of Commerce, 1401 Constitution Avenue NW, Washington, DC 20230, at a date and time to be determined.[10] Parties should confirm by telephone the date, time, and location of the hearing two days before the scheduled date.

Unless otherwise extended, Commerce intends to issue the final results of this administrative review, which will include the results of its analysis of issues raised in any briefs, within 120 days of publication of these preliminary results, pursuant to section 751(a)(3)(A) of the Act.

Assessment Rates

If Commerce proceeds to a final rescission of this administrative review, the assessment rate to which TG Tools' shipments are subject will not be affected by this review. If Commerce does not proceed to a final rescission of this administrative review, pursuant to 19 CFR 351.212(b)(1), we will calculate importer-specific (or customer-specific) assessment rates based on the final results of this review.

[9] *See* 19 CFR 351.310(c).

[10] *See* 19 CFR 351.310(d).

Cash Deposit Requirements

If Commerce proceeds to a final rescission of this administrative review, TG Tools' cash deposit rate will continue to be the China-wide rate of 68.27. If Commerce issues final results for this administrative review, Commerce will instruct U.S. Customs and Border Protection to collect cash deposits, effective upon the publication of the final results, at the rates established therein.

Notification to Importers

This notice also serves as a preliminary reminder to importers of their responsibility under 19 CFR 351.402(f)(2) to file a certificate regarding the reimbursement of antidumping duties prior to liquidation of the relevant entries during this POR. Failure to comply with this requirement could result in Commerce's presumption that reimbursement of antidumping duties occurred and the assessment of doubled antidumping duties.

Notification to Interested Parties

This administrative review and notice are issued and published in accordance with sections 751(a)(1) and 777(i)(1) of the Act and 19 CFR 351.221(b)(4).

Dated: March 27, 2020.

Jeffrey I. Kessler,

Assistant Secretary for Enforcement and Compliance.

Appendix—List of Topics Discussed in the Preliminary Decision Memorandum

I. Summary
II. Background
III. Scope of the Order
IV. Discussion of the Methodology
V. Recommendation

[FR Doc. 2020–07045 Filed 4–2–20; 8:45 am]

BILLING CODE 3510–DS–P

DEPARTMENT OF COMMERCE

International Trade Administration

[C–533–876]

Fine Denier Polyester Staple Fiber From the Republic of India: Preliminary Results of Countervailing Duty Administrative Review

AGENCY: Enforcement and Compliance, International Trade Administration, Department of Commerce.

SUMMARY: The Department of Commerce (Commerce) preliminarily determines that Reliance Industries Limited (Reliance), a producer/exporter of fine denier polyester staple fiber (PSF) from the Republic of India (India) received countervailable subsidies during the period of review (POR) November 6, 2017 through December 31, 2018. Interested parties are invited to comment on these preliminary results.

DATES: Applicable April 3, 2020.

FOR FURTHER INFORMATION CONTACT: Thomas Martin or Dakota Potts, AD/CVD Operations, Office IV, Enforcement and Compliance, International Trade Administration, U.S. Department of Commerce, 1401 Constitution Avenue NW, Washington, DC 20230; telephone: (202) 482–3936 or (202) 482–3586, respectively.

SUPPLEMENTARY INFORMATION:

Background

On June 13, 2019, Commerce published a notice of initiation of an administrative review of the countervailing duty order on PSF from India with respect to Reliance.[1] On November 7, 2019, we extended the deadline for these preliminary results to March 31, 2020.[2] For a complete description of the events that followed the initiation of this review, *see* the Preliminary Decision Memorandum.[3] A list of topics discussed in the Preliminary Decision Memorandum is included as the appendix to this notice. The Preliminary Decision Memorandum is a public document and is on file electronically via Enforcement and Compliance's Antidumping and Countervailing Duty Centralized Electronic System (ACCESS). ACCESS is available to registered users at *http://access.trade.gov,* and to all parties in the Central Records Unit, Room B8024 of the main Commerce building. In addition, a complete version of the Preliminary Decision Memorandum can be accessed directly at *http://enforcement.trade.gov/frn/.* The signed and electronic versions of the Preliminary Decision Memorandum are identical in content.

Scope of the Order

The merchandise covered by this order is fine denier PSF, not carded or combed, measuring less than 3.3 decitex (3 denier) in diameter. The scope covers all fine denier PSF, whether coated or

[1] *See Initiation of Antidumping and Countervailing Duty Administrative Reviews,* 84 FR 27587 (June 13, 2019) (*Initiation Notice*).

[2] *See* Memorandum, ''2017–2018 Countervailing Duty Administrative Review of Fine Denier Polyester Staple Fiber from India: Extension of Deadline for Preliminary Results,'' dated November 7, 2019.

[3] *See* Memorandum, ''Decision Memorandum for Preliminary Results of 2018 Countervailing Duty Administrative Review: Fine Denier Polyester Staple Fiber from India,'' dated concurrently with, and hereby adopted by, this notice (Preliminary Decision Memorandum).

uncoated. The following products are excluded from the scope:

(1) PSF equal to or greater than 3.3 decitex (more than 3 denier, inclusive) currently classifiable under HTSUS subheadings 5503.20.0045 and 5503.20.0065.

(2) Low-melt PSF defined as a bi-component polyester fiber having a polyester fiber component that melts at a lower temperature than the other polyester fiber component, which is currently classifiable under HTSUS subheading 5503.20.0015.

Fine denier PSF is classifiable under the HTSUS subheading 5503.20.0025. Although the HTSUS subheadings are provided for convenience and customs purposes, the written description of the scope of the order is dispositive.

Methodology

Commerce is conducting this administrative review in accordance with section 751(a)(1)(A) of the Tariff Act of 1930, as amended (the Act). For each subsidy program found to be countervailable, Commerce preliminarily finds that there is a subsidy, *i.e.,* a government-provided financial contribution that gives rise to a benefit to the recipient, and that the subsidy is specific.[4] For a full description of the methodology underlying our conclusions, *see* the Preliminary Decision Memorandum.

Preliminary Results of Review

As a result of this review, Commerce preliminarily finds that the net countervailable subsidy rate for the POR regarding Reliance is as follows:

Company	Subsidy rate (*ad valorem*)
Reliance Industries Limited ..	4.26

Assessment Rates

Consistent with section 751(a)(2)(C) of the Act, upon issuance of the final results, Commerce shall determine, and U.S. Customs and Border Protection (CBP) shall assess, countervailing duties on all appropriate entries covered by this review. Commerce intends to issue instructions to CBP 15 days after the date of publication of the final results of this review.

Cash Deposit Requirements

Pursuant to section 751(a)(1) of the Act, Commerce intends to instruct CBP to collect cash deposits of estimated countervailing duties in the amount indicated above with regard to shipments of subject merchandise entered, or withdrawn from warehouse, for consumption on or after the date of publication of the final results of this review. For all non-reviewed firms, Commerce will instruct CBP to continue to collect cash deposits of estimated countervailing duties at the most recent company-specific or all-others rate applicable to the company, as appropriate. These cash deposit instructions, when imposed, shall remain in effect until further notice.

Disclosure and Public Comment

Commerce will disclose to the parties in this proceeding the calculations performed in reaching these preliminary results within five days of the date this notice is published in the **Federal Register**.[5] Interested parties may submit written arguments (case briefs) on these preliminary results within 30 days of publication of the preliminary results, and rebuttal arguments (rebuttal briefs) within seven days after the time limit for filing case briefs.[6] Pursuant to 19 CFR 351.309(d)(2), rebuttal briefs must be limited to issues raised in the case briefs. Parties who submit arguments are requested to submit with their argument: (1) A statement of the issue; (2) a brief summary of the argument; and (3) a table of authorities.[7] Note that Commerce has temporarily modified certain of its requirements for serving documents containing business proprietary information, until May 19, 2020, unless extended.[8]

Interested parties who wish to request a hearing, or to participate if one is requested, must submit a written request within 30 days after the date of publication of this notice.[9] Requests should contain (1) the party's name, address, and telephone number; (2) the number of participants; and (3) a list of the issues to be discussed. If Commerce receives a request for a hearing, Commerce will inform parties of the schedule date for the hearing, which will be held at the main Commerce building at a time and location to be determined.[10] Parties should confirm by telephone, the date, time, and location of the hearing.

Parties are reminded that briefs and hearing requests must be filed electronically using ACCESS and received successfully in their entirety by 5:00 p.m. Eastern Time on the due date.

Unless the deadline is extended pursuant to section 751(a)(3)(A) of the Act, Commerce intends to issue the final results of this administrative review, including the results of Commerce's analysis of the issues raised by parties in their comments, within 120 days after publication of these preliminary results.

Notification to Interested Parties

These preliminary results of review are issued and published in accordance with sections 751(a)(1) and 777(i)(1) of the Act, and 19 CFR 351.213 and 351.221(b)(4).

Dated: March 30, 2020.

Jeffrey I. Kessler,

Assistant Secretary for Enforcement and Compliance.

Appendix—List of Topics Discussed in the Preliminary Decision Memorandum

I. Summary
II. Background
III. Scope of the Order
IV. Period of Review
V. Use of Facts Otherwise Available and Application of Adverse Inferences
VI. Subsidies Valuation Information
VII. Benchmarks and Discount Rates
VIII. Discussion and Analysis of Programs
IX. Recommendation

[FR Doc. 2020–07046 Filed 4–2–20; 8:45 am]

BILLING CODE 3510–DS–P

DEPARTMENT OF COMMERCE

International Trade Administration

[C–489–502]

Circular Welded Carbon Steel Pipes and Tubes From the Republic of Turkey: Preliminary Results of Countervailing Duty Administrative Review and Partial Rescission; Calendar Year 2018

AGENCY: Enforcement and Compliance, International Trade Administration, Department of Commerce.

SUMMARY: The Department of Commerce (Commerce) preliminarily determines that exporters/producers of circular welded carbon steel pipes and tubes from the Republic of Turkey (Turkey) received countervailable subsidies during the period of review (POR), January 1, 2018 through December 31, 2018, that were *de minimis.*

DATES: Applicable April 3, 2020.

FOR FURTHER INFORMATION CONTACT: Jolanta Lawska, AD/CVD Operations, Office III, Enforcement and Compliance,

[4] *See* sections 771(5)(B) and (D) of the Act regarding financial contribution; section 771(5)(E) of the Act regarding benefit, and section 771(5A) of the Act regarding specificity.

[5] *See* 19 CFR 351.224(b).

[6] *See* 19 CFR 351.309(c); *see also* 19 CFR 351.309(d); and 351.303 (for general filing requirements).

[7] *See* 19 CFR 351.309(c)(2); *see also* 19 CFR 351.309(d)(2).

[8] *See Temporary Rule Modifying AD/CVD Service Requirements Due to COVID–19,* 85 FR 17006 (March 26, 2020).

[9] *See* 19 CFR 351.310(c).

[10] *See* 19 CFR 351.310.

International Trade Administration, U.S. Department of Commerce, 1401 Constitution Avenue NW, Washington, DC 20230; telephone: (202) 482–8362.

SUPPLEMENTARY INFORMATION:

Background

On March 7, 1986, Commerce published in the **Federal Register** the countervailing duty order on circular welded carbon steel pipes and tubes from Turkey.[1] On May 29, 2019, Commerce published a notice of initiation of an administrative review of the *Order* covering 35 companies.[2] On August 15, 2019, Commerce selected Borusan Companies for individual examination as the sole mandatory respondent in this administrative review.[3] On November 12, 2019, Commerce extended the due date of the preliminary results of this administrative review until March 27, 2020.[4]

For a complete description of the events that followed the initiation of this review, *see* the Preliminary Decision Memorandum.[5] A list of topics discussed in the Preliminary Decision Memorandum is included at the Appendix to this notice. The Preliminary Decision Memorandum is a public document and is on file electronically via Enforcement and Compliance's Antidumping and Countervailing Duty Centralized Electronic Service System (ACCESS). ACCESS is available to registered users at *https://access.trade.gov* and is available to all parties in the Central Records Unit, Room B8024 of the main Commerce building. In addition, a complete version of the Preliminary Decision Memorandum can be accessed directly at *http://enforcement.trade.gov/frn/*. The signed and electronic versions of the Preliminary Decision Memorandum are identical in content.

Scope of the Order

The merchandise covered by the *Order* is circular welded carbon steel pipes and tubes from Turkey. For a complete description of the scope of the *Order, see* the Preliminary Decision Memorandum.

Methodology

Commerce is conducting this review in accordance with section 751(a)(1)(A) of the Tariff Act of 1930, as amended (the Act). For each of the subsidy programs found to be countervailable, we preliminarily determine that there is a subsidy, *i.e.,* a financial contribution by an ''authority'' that confers a benefit to the recipient, and that the subsidy is specific.[6] For a full description of the methodology underlying our conclusions, *see* the accompanying Preliminary Decision Memorandum.

Rescission of Administrative Review, in Part and Non-Shipment Claims

On June 7, 20, and 25, 2019, Tosçelik Profil ve Sac Endüstrisi A.S., Tosyali Dis Ticaret A.S., Toscelik Metal Ticaret A.Ş. (collectively, Tosçelik),[7] HDM Celik Boru Sanayi ve Ticaret A.S. (Celik),[8] and Çimtaş Boru Imalatlari ve Ticaret Ltd. Sirketi (Çimtaş) timely submitted no shipment certifications.[9] Because no evidence on the record contradicts these certifications, we are rescinding this administrative review with regard to Toscelik, Celik and Cimtas in accordance with 19 CFR 351.213(d)(3).[10]

Additionally, on June 28, 2019, the Borusan Companies [11] submitted a letter to Commerce timely certifying that affiliates Borusan Istikbal Ticaret T.A.S. (Borusan Istikbal), Borusan Birlesik Boru Fabrikalari San ve Tic. (Borusan Birlesik), Borusan Gemlik Boru Tesisleri A.S. (Borusan Gemlik), Borusan Ihracat Ithalat ve Dagitim A.S. (Borusan Ihracat), Tubeco Pipe and Steel Corporation (Tubeco), and Borusan Lojistik Dagitim Depolama Tasimacilik ve Ticaret A.S (Borusan Lojistik) had no entries, exports, or sales of subject merchandise into the United States during the POR.[12] Because no evidence on the record contradicts these certifications, we are rescinding the administrative review with regard to Borusan Birlesik, Borusan Gemlik, Borusan Ihracat, Tubeco, and Borusan Lojistik in accordance with 19 CFR 351.213(d)(3).[13] We are not rescinding the review for Istikbal because we preliminarily determine that it is part of the cross-owned entity referred to as the Borusan Companies, the mandatory respondent in this review.

On June 7 and June 11, 2019, respectively, Cayirova Boru Sanayi ve Ticaret A.S., Yucel Boru ve Profil Endustrisi A.S., and Yucelboru Ihracat Ithalat ve Pazarlama A.S. (collectively, the Yucel Companies) and Erbosan Erciyas Boru Sanayi ve Ticaret A.S. (Erbosan) timely filed no shipments certifications.[14] However, the results of the queries Commerce performed on the trade database maintained by U.S. Customs and Border Protection (CBP) indicated that shipments produced and/or exported by the Yucel Companies and Erbosan entered the United States during the POR.[15] In comments filed on the record, the Yucel Companies argued that Commerce should not conclude that it had reviewable entries during the POR.[16] In response to the Yucel Companies' comments, we explained that ''Commerce's practice in {countervailing duty} proceedings is to conduct reviews based on merchandise that is 'produced and/or exported' to the United States'' and Commerce need not consider ''whether the Yucel Companies

[1] *See Countervailing Duty Order; Certain Welded Carbon Steel Pipe and Tube Products from Turkey,* 51 FR 7984 (March 7, 1986) (*Order*).

[2] *See Initiation of Antidumping and Countervailing Duty Administrative Reviews,* 84 FR 24743, 24748 (May 29, 2019).

[3] *See* Memorandum, ''Selection of Respondents for Individual Examination,'' dated August 15, 2019.

[4] *See* Memorandum, ''Circular Welded Carbon Steel Pipes and Tubes from Turkey: Extension of Deadline for Preliminary Results of Countervailing Duty Administrative Review,'' dated November 12, 2019.

[5] *See* Memorandum, ''Decision Memorandum for the Preliminary Results of the Countervailing Duty Administrative Review: Certain Welded Carbon Steel Pipe and Tube Products from Turkey; 2018,'' dated concurrently with, and hereby adopted by, this notice (Preliminary Decision Memorandum).

[6] *See* sections 771(5)(B) and (D) of the Act regarding financial contribution; section 771(5)(E) of the Act regarding benefit; and section 771(5A) of the Act regarding specificity.

[7] *See* Tosçelik's Letter, ''Circular Pipe from Turkey; Tosçelik No-Shipments Letter,'' dated June 7, 2019.

[8] *See* Celik's Letter, ''Circular Welded Carbon Steel Pipes and Tubes (C–489–502) Countervailing Duty Administrative Review (1/1/18–12/31/18),'' dated June 20, 2019.

[9] *See* Cimtas' Letter, ''Circular Welded Carbon Steel Pipes and Tubes (C–489–502) Countervailing Duty Administrative Review (1/1/18–12/31/18),'' dated June 25, 2019.

[10] *See* Memorandum, ''Results of Customs and Border Protection Query Results,'' dated June 19, 2019; *see also* Memorandum, ''Second Customs and Border Protection (CBP) Query Results,'' dated July 26, 2019 (CBP Query Memorandum); and Memorandum, ''No-shipment inquiry with Respect to Various Companies During the Period 01/01/2018 through 12/31/2018,'' dated March 27, 2020 (No Shipment Memorandum for Various Companies).

[11] The Borusan Companies consist of Borusan Holding A.S. (also referred to as Borusan Holding), Borusan Mannesmann Yatirim Holding, Borusan Mannesmann Boru Sanayi ve Ticaret A.S. (Borusan), and Borusan Istikbal Ticaret T.A.S. (Istikbal) (collectively, the Borusan Companies).

[12] *See* Borusan's Letter, ''Circular Welded Carbon Steel Pines and Tubes from Turkey. Case No. C–489–502: No Shipment Letter,'' dated June 28, 2019.

[13] *See* No Shipment Memorandum for Various Companies.

[14] *See* Yucel's Letter, ''Circular Welded Carbon Steel Pipe and Tube from Turkey: Yucel No Shipment Letter,'' dated June 7, 2019; *see also* Erbosan's Letter, ''No Shipment Certification of Erbosan Erciyas Boru Sanayi ve Ticaret A.S. (Erbosan) in the 2018 Administrative Review of the Countervailing Duty Order Involving Certain Welded Carbon Steel Standard Pipe from Turkey,'' dated June 11, 2019.

[15] *See* CBP Query Memorandum.

[16] *See* Yucel's Letters, ''Yücel reply comments re: Independence Tube's comments on CBP data,'' dated June 30, 2019; and ''Yücel comments on second CBP release,'' dated July 30, 2019.

had knowledge of the shipments or whether the merchandise was shipped directly from Tukey.'' [17] Thus, consistent with the Respondent Selection Memorandum, we preliminarily determine that subject merchandise produced and/or exported by the Yucel Companies entered the United States during the POR and, therefore, we are not rescinding the review with regard to the Yucel Companies. Similarly, because Erbosan did not contest the results of queries we performed on CBP's trade database, we preliminarily determine that subject merchandise produced and/or exported by Erbosan entered the United States during the POR and, therefore, we are not rescinding the review with regard to Erbosan.

Rate for Non-Selected Companies Under Review

The Act and Commerce's regulations do not directly address the establishment of rates to be applied to companies not selected for individual examination where Commerce limited its examination in an administrative review pursuant to section 777A(e)(2) of the Act. However, Commerce normally determines the rates for non-selected companies in reviews in a manner that is consistent with section 705(c)(5) of the Act, which provides instructions for calculating the all-others rate in an investigation. We also note that section 777A(e)(2) of the Act provides that ''{t}he individual countervailable subsidy rates determined under subparagraph (A) shall be used to determine the all-others rate under section 705(c)(5) {of the Act}.'' Section 705(c)(5)(A) of the Act states that for companies not investigated, in general, we will determine an all-others rate by using the weighted-average countervailable subsidy rates established for each of the companies individually investigated, excluding zero and *de minimis* rates or any rates based solely on the facts available. However, we preliminarily determine that the sole mandatory respondent in this review, the Borusan Companies, received countervailable subsidies that are *de minimis.* Therefore, in these preliminary results, we are applying the net subsidy rate calculated for the Borusan Companies to those firms subject to review that were not selected for individual examination.

Preliminary Results of the Review

In accordance with 19 CFR 351.221(b)(4)(i), we calculated an individual subsidy rate for the Borusan Companies. For the period January 1, 2018 through December 31, 2018, we preliminarily determine that the following net subsidy rates for the producers/exporters under review to be as follows:

Company	Net subsidy rate (% de minimis)
Borusan Holding A.S. (also referred to as Borusan Holding), Borusan Mannesmann Yatirim Holding, Borusan Mannesmann Boru Sanayi ve Ticaret A.S. (Borusan), and Borusan Istikbal Ticaret T.A.S. (Istikbal) (collectively, the Borusan Companies)	0.37
Borusan Ithicat ve Dagitim A.S	0.37
Borusan Mannesmann	0.37
Borusan Mannesmann Pipe US, Inc	0.37
Cagil Makina Sanayi ve Ticaret A.S	0.37
Eksen Makina	0.37
Erbosan Erciyas Boru Sanayi ve Ticaret A.S.	0.37
Guner Eksport	0.37
Guven Celik Born San. Ve Tic. Ltd	0.37
Guven Steel Pipe	0.37
Kalibre Boru Sanayi ve Ticaret AS	0.37
MTS Lojistik ve Tasimacilik Hizmetleri TIC A.S. Istanbul	0.37
Net Boru Sanayi ve Dis Ticaret Koll. Sti	0.37
Noksel Celik Boru Sanayi AS	0.37
Perfektup Ambalaj San. ve Tic. A.S	0.37
Schenker Arkas Nakliyat ve Ticaret A.S	0.37
Umran Celik Born Sanayii A.S	0.37
Umran Steel Pipe Inc	0.37
Vespro Muhendislik Mimarlik Danismanlik Sanayi ve Ticaret AS	0.37
Yucel Boru ve Profil Endustrisi A.S., Yucelboru Ihracat Ithalat ve Pazarlama A.S., and Cayirova Boru Sanayi ve Ticaret A.S. (Yucel Companies)	0.37

Assessment Rates

Consistent with section 751(a)(2)(C) of the Act and 19 CFR 351.212(b)(2), upon issuance of the final results, Commerce shall determine, and CBP shall assess, countervailing duties on all appropriate entries covered by this review. We intend to issue instructions to CBP 15 days after publication of the final results of this review.

For the companies for which this review is rescinded, Commerce will instruct CBP to assess countervailing duties on all appropriate entries at a rate equal to the cash deposit of estimated countervailing duties required at the time of entry, or withdrawal from warehouse, for consumption, during the period January 1, 2018 through December 31, 2018, in accordance with 19 CFR 351.212(c)(1)(i).

Cash Deposit Requirements

Pursuant to section 751(a)(2)(C) of the Act, upon issuance of the final results, Commerce also intends to instruct CBP to collect cash deposits of estimated countervailing duties for each of the companies listed above on shipments of subject merchandise entered, or withdrawn from warehouse, for consumption on or after the date of publication of the final results of this administrative review, except, where the rate calculated in the final results is zero or *de minimis,* no cash deposit will be required. For all non-reviewed firms, we will instruct CBP to continue to collect cash deposits of estimated countervailing duties at the most recent company-specific or all-others rate applicable to the company, as appropriate. These cash deposit requirements, when imposed, shall remain in effect until further notice.

[17] *See* Respondent Selection Memorandum, at 4.

Disclosure and Public Comment

We will disclose to parties to this proceeding the calculations performed in reaching the preliminary results within five days of the date of publication of these preliminary results.[18] Interested parties may submit written arguments (case briefs) within 30 days of publication of the preliminary results and rebuttal comments (rebuttal briefs) within five days after the time limit for filing the case briefs.[19] Pursuant to 19 CFR 351.309(d)(2), rebuttal briefs may respond only to issues raised in the case briefs. Parties who submit arguments are requested to submit with the argument: (1) A statement of the issue; (2) a brief summary of the argument; and (3) a table of authorities.[20] Note that Commerce has temporarily modified certain of its requirements for serving documents containing business proprietary information, until May 19, 2020, unless extended. [21]

Pursuant to 19 CFR 351.310(c), interested parties who wish to request a hearing must submit a written request to the Assistant Secretary for Enforcement and Compliance, U.S. Department of Commerce, within 30 days after the date of publication of this notice.[22] Requests should contain the party's name, address, and telephone number, the number of participants, and a list of the issues to be discussed. Issues addressed during the hearing will be limited to those raised in the briefs.[23] If a request for a hearing is made, we will inform parties of the scheduled date for the hearing, which will be held at the U.S. Department of Commerce, 1401 Constitution Avenue NW, Washington, DC 20230, at a time and location to be determined.[24] Parties should confirm by telephone the date, time, and location of the hearing two days before the scheduled date.

Parties are reminded that briefs and hearing requests are to be filed electronically using ACCESS and that electronically filed documents must be received successfully in their entirety by 5:00 p.m. Eastern Time on the due date.

Unless the deadline is extended pursuant to section 751(a)(3)(A) of the Act, Commerce will issue the final results of this administrative review, including the results of our analysis of the issues raised by parties in their comments, within 120 days after issuance of these preliminary results.

These preliminary results are issued and published in accordance with sections 751(a)(1) and 777(i)(1) of the Act and 19 CFR 351.221(b)(4).

Dated: March 27, 2020.

Christian Marsh,

Deputy Assistant Secretary for Enforcement and Compliance.

Appendix

List of Topics Discussed in the Preliminary Decision Memorandum

I. Summary
II. Background
III. Non-Shipment Claims and Partial Rescission
IV. Period of Review
V. Scope of the Order
VI. Subsidy Valuation Information
VII. Non-Selected Rate
VIII. Analysis of Programs
IX. Recommendation

[FR Doc. 2020–07044 Filed 4–2–20; 8:45 am]

BILLING CODE 3510–DS–P

[18] *See* 19 CFR 351.224(b).

[19] *See* 19 CFR 351.309(c)(1)(ii) and 351.309(d)(1).

[20] *See* 19 CFR 351.309(c)(2) and 351.309(d)(2).

[21] *See Temporary Rule Modifying AD/CVD Service Requirements Due to COVID–19,* 85 FR 17006 (March 26, 2020).

[22] *See* 19 CFR 351.310(c).

[23] *See* 19 CFR 351.310(c).

[24] *See* 19 CFR 351.310.

DEPARTMENT OF COMMERCE

National Oceanic and Atmospheric Administration

[RTID 0648–XA102]

Mid-Atlantic Fishery Management Council (MAFMC); Public Meeting

AGENCY: National Marine Fisheries Service (NMFS), National Oceanic and Atmospheric Administration (NOAA), Commerce.

ACTION: Notice; public meeting.

SUMMARY: The Mid-Atlantic Fishery Management Council's (Council) Research Steering Committee (RSC) will hold a meeting.

DATES: The meeting will be held on Tuesday, April 28, 2020, beginning at 9 a.m. and conclude by 12 p.m. For agenda details, see **SUPPLEMENTARY INFORMATION**.

ADDRESSES: The meeting will be held via webinar. Details on the proposed agenda, webinar listen-in access, and briefing materials will be posted at the MAFMC's website: *www.mafmc.org.*

Council address: Mid-Atlantic Fishery Management Council, 800 N. State Street, Suite 201, Dover, DE 19901; telephone: (302) 674–2331; *www.mafmc.org.*

FOR FURTHER INFORMATION CONTACT: Christopher M. Moore, Ph.D., Executive Director, Mid-Atlantic Fishery Management Council, telephone: (302) 526–5255.

SUPPLEMENTARY INFORMATION: The purpose of this RSC meeting is to discuss initial re-development of the research set-aside (RSA) program. The RSC will also discuss workshop logistics, a range of topics/options for the workshop, next steps and collaboration with the Atlantic States Marine Fisheries Commission, and other business. The Committee's recommendations will be presented at a subsequent Council Meeting with the goal of hosting an RSA workshop in September 2020.

Authority: 16 U.S.C. 1801 *et seq.*

Dated: March 31, 2020.

Tracey L. Thompson,

Acting Deputy Director, Office of Sustainable Fisheries, National Marine Fisheries Service.

[FR Doc. 2020–07011 Filed 4–2–20; 8:45 am]

BILLING CODE 3510–22–P

DEPARTMENT OF COMMERCE

National Oceanic and Atmospheric Administration

[RTID 0648–XA093]

Pacific Fishery Management Council; Public Meeting

AGENCY: National Marine Fisheries Service (NMFS), National Oceanic and Atmospheric Administration (NOAA), Commerce.

ACTION: Notice of public meeting (webinar).

SUMMARY: The Pacific Fishery Management Council's (Pacific Council) Southern Resident Killer Whale Workgroup (Workgroup) will host a webinar, which is open to the public.

DATES: The webinar meeting will be held on Tuesday, April 28, 2020, from 9 a.m. until 2 p.m., Pacific Standard Time. The webinar time is an estimate; the meeting will adjourn when business for the day is completed.

ADDRESSES: A public listening station is available at the Pacific Council office (address below). To attend the webinar (1) join the meeting by using this link: *https://meetings.ringcentral.com/join,* (2) enter the Meeting ID provided in the meeting announcement (see *http://www.pcouncil.org*) and click JOIN, (3) you will be prompted to either download the RingCentral meetings application or join the meeting without a download via your web browser, and (4) enter your name and click JOIN. NOTE: We require all participants to use a telephone or cell phone to participate. (1) You must use your telephone for the audio portion of the meeting by dialing the TOLL number provided on your

screen followed by the meeting ID and participant ID, also provided on the screen. (2) Once connected, you will be in the meeting, seeing other participants and a shared screen, if applicable.

Technical Information and System Requirements: PC-based attendees are required to use Windows® 10, 8; Mac®-based attendees are required to use Mac OS® X 10.5 or newer; Mobile attendees are required to use iPhone®, iPad®, Android™ phone or Android tablet (See the RingCentral mobile apps in your app store). You may send an email to Mr. Kris Kleinschmidt (*kris.kleinschmidt@noaa.gov)* or contact him at 503–820–2280, extension 412 for technical assistance.

Council address: Pacific Fishery Management Council, 7700 NE Ambassador Place, Suite 101, Portland, OR 97220.

FOR FURTHER INFORMATION CONTACT: Ms. Robin Ehlke, Pacific Council; telephone: (503) 820–2410.

SUPPLEMENTARY INFORMATION: The purpose of the webinar will be to draft the executive summary for the final risk assessment document, and discuss and consider potential recommendations for salmon management measures. The Workgroup may also discuss and prepare for future Workgroup meetings and future meetings with the Pacific Fishery Management Council (Council) and its advisory bodies. Members of the Salmon Advisory Subpanel will also be in attendance.

Although non-emergency issues not contained in the meeting agenda may be discussed, those issues may not be the subject of formal action during this meeting. Action will be restricted to those issues specifically listed in this document and any issues arising after publication of this document that require emergency action under section 305(c) of the Magnuson-Stevens Fishery Conservation and Management Act, provided the public has been notified of the intent to take final action to address the emergency.

Special Accommodations

This meeting is physically accessible to people with disabilities. Requests for sign language interpretation or other auxiliary aids should be directed to Mr. Kris Kleinschmidt, (503) 820–2412, at least 10 business days prior to the meeting date.

Dated: March 31, 2020.

Tracey L. Thompson,

Acting Deputy Director, Office of Sustainable Fisheries, National Marine Fisheries Service.

[FR Doc. 2020–07006 Filed 4–2–20; 8:45 am]

BILLING CODE 3510–22–P

DEPARTMENT OF COMMERCE

National Oceanic and Atmospheric Administration

[RTID 0648–XA053]

Take of Marine Mammals Incidental to Specified Activities; Taking Marine Mammals Incidental to the Hampton Roads Bridge-Tunnel Expansion Project, Hampton-Norfolk, Virginia

Correction

In notice document 2020–05807 beginning on page 16194 in the issue of Friday, March 20, 2020, make the following correction:

On page 16214, the graphic should appear as follows:

BILLING CODE 1301–00–P

Table 7-- Possible Vibratory Pile Combinations for the Project

Method			Vibratory								
	Pile Diameter (Inches)		24	24+24	36	42	36+24	42+24	36+36	42+36	42+42
		SSL (dB)	161	164	167	168	168	169	170	171	171
Vibratory	24	161	**164**	**166**	**168**	**169**	-	-	-	-	-
	36	167	**168**	**169**	**170**	**171**	**171**	-	**172**	-	-
	42	168	**169**	**169**	**171**	**171**	**171**	**172**	**172**	**173**	**173**

SSL = Sound Source Level; dB = decibels.
"-" combination not valid, must compare lowest 2 values first, then highest value.

[FR Doc. C1–2020–05807 Filed 4–2–20; 8:45 am]

BILLING CODE 1301–00–D

DEPARTMENT OF COMMERCE

National Oceanic and Atmospheric Administration

[RTID 0648–XA088]

Fisheries of the South Atlantic; Southeast Data, Assessment, and Review (SEDAR); Public Meeting

AGENCY: National Marine Fisheries Service (NMFS), National Oceanic and Atmospheric Administration (NOAA), Commerce.

ACTION: Notice of SEDAR 66 South Atlantic Tilefish Data Scoping Webinar.

SUMMARY: The SEDAR 66 assessment of the South Atlantic stock of Tilefish will consist of a data scoping webinar, an in-person workshop and a series assessment webinars.

DATES: The SEDAR 66 Tilefish Data Scoping Webinar has been scheduled for Monday, April 27, 2020, from 9 a.m. to 12 p.m., EDT.

ADDRESSES:

Meeting address: The meeting will be held via webinar. The webinar is open to members of the public. Registration is available online at: *https://attendee.gotowebinar.com/register/5879221020606450444.*

SEDAR address: South Atlantic Fishery Management Council, 4055 Faber Place Drive, Suite 201, N Charleston, SC 29405; *www.sedarweb.org.*

FOR FURTHER INFORMATION CONTACT: Kathleen Howington, SEDAR Coordinator, 4055 Faber Place Drive, Suite 201, North Charleston, SC 29405; phone: (843) 571–4366; email: *Kathleen.Howington@safmc.net.*

SUPPLEMENTARY INFORMATION: The Gulf of Mexico, South Atlantic, and Caribbean Fishery Management Councils, in conjunction with NOAA Fisheries and the Atlantic and Gulf States Marine Fisheries Commissions, have implemented the Southeast Data, Assessment and Review (SEDAR)

process, a multi-step method for determining the status of fish stocks in the Southeast Region. SEDAR is a three-step process including: (1) Data Workshop; (2) Assessment Process utilizing webinars; and (3) Review Workshop. The product of the Data Workshop is a data report which compiles and evaluates potential datasets and recommends which datasets are appropriate for assessment analyses. The product of the Assessment Process is a stock assessment report which describes the fisheries, evaluates the status of the stock, estimates biological benchmarks, projects future population conditions, and recommends research and monitoring needs. The assessment is independently peer reviewed at the Review Workshop. The product of the Review Workshop is a Summary documenting panel opinions regarding the strengths and weaknesses of the stock assessment and input data. Participants for SEDAR Workshops are appointed by the Gulf of Mexico, South Atlantic, and Caribbean Fishery Management Councils and NOAA Fisheries Southeast Regional Office, Highly Migratory Species Management Division, and Southeast Fisheries Science Center. Participants include: Data collectors and database managers; stock assessment scientists, biologists, and researchers; constituency representatives including fishermen, environmentalists, and non-governmental organizations (NGOs); international experts; and staff of Councils, Commissions, and state and federal agencies.

The items of discussion at the SEDAR 66 Tilefish Data Scoping Webinar are as follows:

- Discuss available data sources
- Identify and discuss potential new data sources

Although non-emergency issues not contained in this agenda may come before this group for discussion, those issues may not be the subject of formal action during this meeting. Action will be restricted to those issues specifically identified in this notice and any issues arising after publication of this notice that require emergency action under section 305(c) of the Magnuson-Stevens Fishery Conservation and Management Act, provided the public has been notified of the intent to take final action to address the emergency.

Special Accommodations

This meeting is accessible to people with disabilities. Requests for auxiliary aids should be directed to the South Atlantic Fishery Management Council office (see **ADDRESSES**) at least 5 business days prior to the meeting.

Note: The times and sequence specified in this agenda are subject to change.

Authority: 16 U.S.C. 1801 *et seq.*

Dated: March 31, 2020.

Tracey L. Thompson,

Acting Deputy Director, Office of Sustainable Fisheries, National Marine Fisheries Service.

[FR Doc. 2020–07008 Filed 4–2–20; 8:45 am]

BILLING CODE 3510–22–P

DEPARTMENT OF COMMERCE

National Oceanic and Atmospheric Administration

[RTID 0648–XA091]

Fisheries of the South Atlantic; South Atlantic Fishery Management Council; Public Meeting

AGENCY: National Marine Fisheries Service (NMFS), National Oceanic and Atmospheric Administration (NOAA), Commerce.

ACTION: Notice of public meetings.

SUMMARY: The South Atlantic Fishery Management Council's (Council) will hold a meeting of its Scientific and Statistical Committee (SSC) via webinar. See **SUPPLEMENTARY INFORMATION**.

DATES: The SSC meeting will take place from 1:30 p.m. to 5 p.m., Tuesday, April 28, 2020; 8:30 a.m. to 5 p.m., Wednesday, April 29, 2020; and 8:30 a.m. to 5 p.m., Thursday, April 30, 2020.

ADDRESSES:

Meeting address: The meeting will be held via webinar.

Council address: South Atlantic Fishery Management Council, 4055 Faber Place Drive, Suite 201, N. Charleston, SC 29405.

FOR FURTHER INFORMATION CONTACT: Kim Iverson, Public Information Officer, 4055 Faber Place Drive, Suite 201, North Charleston, SC 29405; phone: (843) 571–4366 or toll free (866) SAFMC–10; fax: (843) 769–4520; email: *kim.iverson@safmc.net.*

SUPPLEMENTARY INFORMATION: The meeting is open to the public via webinar as it occurs. Webinar registration is required. Information regarding webinar registration will be posted to the Council's website at: *http://safmc.net/safmc-meetings/scientific-and-statistical-committee-meetings/* as it becomes available. The meeting agenda, briefing book materials, and online comment form will be posted to the Council's website two weeks prior to the meeting. Written comment on SSC agenda topics is to be distributed to the Committee through the Council office, similar to all other briefing materials. Written comment to be considered by the SSC shall be provided to the Council office no later than one week prior to an SSC meeting. For this meeting, the deadline for submission of written comment is 12 p.m., Tuesday, April 21, 2020.

The following agenda items will be addressed by the SSC during the meeting:

1. Approve Terms of Reference, schedules, and request participants for the Red Snapper, Black Sea Bass, and Spanish Mackerel assessments;
2. Discuss the new weight estimation procedure from NOAA Fisheries' Southeast Fisheries Science Center (SEFSC), review the new landings time series for all unassessed species due to this change in weight estimation methodology, consider updating the previous ABC recommendations based on these newly updated landings data, consider the use of the Only Reliable Catch Stocks (ORCS) method and/or revising the time series for Dolphin and Wahoo used for ABC calculations;
3. Review the Southeast Data, Assessment, and Review (SEDAR) 38 King Mackerel stock assessment update, apply Acceptable Biological Catch (ABC) Control Rule and provide fishing level recommendations, and discuss uncertainties;
4. Review the SEDAR 59 Greater Amberjack stock assessment, apply ABC Control Rule and provide fishing level recommendations, and discuss uncertainties;
5. Review the SEDAR 60 Red Porgy assessment, apply ABC Control Rule and provide fishing level recommendations, and discuss uncertainties;
6. Updates on the Council Workplan and discussion of other business as needed.

The SSC will provide guidance to staff and recommendations for Council consideration as appropriate.

Multiple opportunities for comment on agenda items will be provided during SSC meetings. Open comment periods will be provided at the start of the meeting and near the conclusion. Those interested in providing comment should indicate such in the manner requested by the Chair, who will then recognize individuals to provide comment. Additional opportunities for comment on specific agenda items will be provided, as each item is discussed, between initial presentations and SSC discussion. Those interested in providing comment should indicate such in the manner requested by the Chair, who will then recognize

individuals to provide comment. All comments are part of the record of the meeting.

Although non-emergency issues not contained in the meeting agenda may come before this group for discussion, those issues may not be the subject of formal action during this meeting. Action will be restricted to those issues specifically identified in this notice and any issues arising after publication of this notice that require emergency action under section 305(c) of the Magnuson-Stevens Fishery Conservation and Management Act, provided the public has been notified of the intent to take final action to address the emergency.

Special Accommodations

This meeting is accessible to people with disabilities. Requests for auxiliary aids should be directed to the SAFMC office (see **ADDRESSES**) at least 5 business days prior to the meeting.

Note: The times and sequence specified in this agenda are subject to change.

(Authority: 16 U.S.C. 1801 *et seq.*)

Dated: March 31, 2020.

Tracey L. Thompson,

Acting Deputy Director, Office of Sustainable Fisheries, National Marine Fisheries Service.

[FR Doc. 2020–07010 Filed 4–2–20; 8:45 am]

BILLING CODE 3510–22–P

COMMITTEE FOR PURCHASE FROM PEOPLE WHO ARE BLIND OR SEVERELY DISABLED

Procurement List; Proposed Additions and Deletions

AGENCY: Committee for Purchase From People Who Are Blind or Severely Disabled.

ACTION: Proposed additions to and deletions from the Procurement List.

SUMMARY: The Committee is proposing to add products to the Procurement List that will be furnished by nonprofit agencies employing persons who are blind or have other severe disabilities, and deletes products and services previously furnished by such agencies.

DATES: *Comments must be received on or before:* May 3, 2020.

ADDRESSES: Committee for Purchase From People Who Are Blind or Severely Disabled, 1401 S Clark Street, Suite 715, Arlington, Virginia 22202–4149.

FOR FURTHER INFORMATION CONTACT: For further information or to submit comments contact: Michael R. Jurkowski, Telephone: (703) 603–2117, Fax: (703) 603–0655, or email *CMTEFedReg@AbilityOne.gov.*

SUPPLEMENTARY INFORMATION: This notice is published pursuant to 41 U.S.C. 8503 (a)(2) and 41 CFR 51–2.3. Its purpose is to provide interested persons an opportunity to submit comments on the proposed actions.

Additions

If the Committee approves the proposed additions, the entities of the Federal Government identified in this notice will be required to procure the products listed below from nonprofit agencies employing persons who are blind or have other severe disabilities.

The following products are proposed for addition to the Procurement List for production by the nonprofit agencies listed:

Products

NSNs—Product Names:
- MR 13020—Scoop, Cookie, Medium
- MR 13022—Corer, Cupcake
- MR 13024—Cookie Press, Disc Storage, 12 Discs
- MR 13025—Set, Disc, Christmas
- MR 13056—Kit, Bottle, Bakers, 8pc
- MR 13057—Knife, Icing, Cupcake
- MR 13058—cups, Baking, Silicone
- MR 13059—Spatula, Baking, cookie, Silicone
- MR 13049—Set, Disc, Springtime

Mandatory Source of Supply: Cincinnati Association for the Blind, Cincinnati, OH

Contracting Activity: Military Resale-Defense Commissary Agency

NSNs—Product Names:
- 6508–00–NIB–0002—Refill, PURELL–SKILCRAFT, Healthcare Advanced Hand Sanitizer, Ultra Nourishing Foam, ES8 System
- 6508–00–NIB–0003—Refill, PURELL–SKILCRAFT, Healthcare Advanced Hand Sanitizer, Gentle & Free Foam, ES8 System

Mandatory Source of Supply: Travis Association for the Blind, Austin, TX

Mandatory For: Total Government Requirement

Contracting Activity: DEFENSE LOGISTICS AGENCY, DLA TROOP SUPPORT

Deletions

The following products and services are proposed for deletion from the Procurement List:

Products

NSNs—Product Names:
- 8415–00–FAB–0702—Kit, Pre-Cut Fabric, GEN III ECWCS, Jacket, OEFCP, XSmall-Short
- 8415–00–FAB–0706—Kit, Pre-Cut Fabric, GEN III ECWCS, Jacket, OEFCP, XSmall-Regular
- 8415–00–FAB–0713—Kit, Pre-Cut Fabric, GEN III ECWCS, Jacket, OEFCP, Small-Short
- 8415–00–FAB–0724—Kit, Pre-Cut Fabric, GEN III ECWCS, Jacket, OEFCP, Small-Regular
- 8415–00–FAB–0728—Kit, Pre-Cut Fabric, GEN III ECWCS, Jacket, OEFCP, Small-Long
- 8415–00–FAB–0730—Kit, Pre-Cut Fabric, GEN III ECWCS, Jacket, OEFCP, Med-Regular
- 8415–00–FAB–0733—Kit, Pre-Cut Fabric, GEN III ECWCS, Jacket, OEFCP, Med-Long
- 8415–00–FAB–0744—Kit, Pre-Cut Fabric, GEN III ECWCS, Jacket, OEFCP, Large-Regular
- 8415–00–FAB–0751—Kit, Pre-Cut Fabric, GEN III ECWCS, Jacket, OEFCP, Large-Long
- 8415–00–FAB–0754—Kit, Pre-Cut Fabric, GEN III ECWCS, Jacket, OEFCP, XLarge-Regular
- 8415–00–FAB–0759—Kit, Pre-Cut Fabric, GEN III ECWCS, Jacket, OEFCP, XLarge-Long
- 8415–00–FAB–0760—Kit, Pre-Cut Fabric, GEN III ECWCS, Jacket, OEFCP, XLarge-Xlong
- 8415–00–FAB–0925—Kit, Pre-Cut Fabric, GEN III ECWCS, Jacket, OEFCP, XXLarge-Regular
- 8415–00–FAB–0936—Kit, Pre-Cut Fabric, GEN III ECWCS, Jacket, OEFCP, XXLarge-Long
- 8415–00–FAB–0941—Kit, Pre-Cut Fabric, GEN III ECWCS, Jacket, OEFCP, XXLarge-Xlong
- 8415–00–FAB–6057—Kit, Pre-Cut Fabric, GEN III ECWCS, Jacket, UCP, Small-Regular
- 8415–00–FAB–6067—Kit, Pre-Cut Fabric, GEN III ECWCS, Jacket, UCP, Med-Regular
- 8415–00–FAB–6074—Kit, Pre-Cut Fabric, GEN III ECWCS, Jacket, UCP, Large-Regular
- 8415–00–FAB–6080—Kit, Pre-Cut Fabric, GEN III ECWCS, Jacket, UCP, XLarge-Regular
- 8415–00–FAB–6082—Kit, Pre-Cut Fabric, GEN III ECWCS, Jacket, UCP, Large-Long
- 8415–00–FAB–6089—Kit, Pre-Cut Fabric, GEN III ECWCS, Jacket, UCP, XLarge-Long
- 8415–00–FAB–8745—Kit, Pre-Cut Fabric, GEN III ECWCS, Jacket, UCP, Small-Short
- 8415–00–FAB–8758—Kit, Pre-Cut Fabric, GEN III ECWCS, Jacket, UCP, Small-Long
- 8415–00–FAB–8809—Kit, Pre-Cut Fabric, GEN III ECWCS, Jacket, UCP, Med-Long
- 8415–00–FAB–8820—Kit, Pre-Cut Fabric, GEN III ECWCS, Jacket, UCP, XLarge-XLong
- 8415–00–FAB–8828—Kit, Pre-Cut Fabric, GEN III ECWCS, Jacket, UCP, 2XLarge-Regular
- 8415–00–FAB–8829—Kit, Pre-Cut Fabric, GEN III ECWCS, Jacket, UCP, 2XLarge-Long
- 8415–00–FAB–8834—Kit, Pre-Cut Fabric, GEN III ECWCS, Jacket, UCP, 2XLarge-XLong

Mandatory Source of Supply: Blind Industries & Services of Maryland, Baltimore, MD

Contracting Activity: DEPT OF JUST/ FEDERAL PRISON SYSTEM, Washington, DC

NSNs—Product Names:

8415–00–FAB–6409—Kit, Pre-Cut Fabric, GEN III ECWCS, Trouser, UCamo, XL–XL
8415–00–FAB–6410—Kit, Pre-Cut Fabric, GEN III ECWCS, Trouser, UCamo, XS–XS
Mandatory Source of Supply: Winston-Salem Industries for the Blind, Inc., Winston-Salem, NC
Contracting Activity: DEPT OF JUST/ FEDERAL PRISON SYSTEM, Washington, DC

Services

Service Type: Janitorial/Custodial
Mandatory for: U.S. Army Reserve Center: 124 Manley Street, Brockton, MA
Mandatory Source of Supply: Morgan Memorial Goodwill Industries, Boston, MA
Contracting Activity: DEPT OF THE ARMY, W6QK ACC–PICA

Service Type: Janitorial/Custodial
Mandatory for: U.S. Army Reserve Center: 443 Route 119 North, Indiana, PA
Contracting Activity: DEPT OF THE ARMY, W6QM MICC CTR–FT DIX (RC)

Service Type: Janitorial/Minor Maintenance
Mandatory for: U.S. Federal Building and Post Office Tupelo, MS
Mandatory Source of Supply: Alabama Goodwill Industries, Inc., Birmingham, AL
Contracting Activity: PUBLIC BUILDINGS SERVICE, ACQUISITION DIVISION/ SERVICES BRANCH

Michael R. Jurkowski,

Deputy Director, Business & PL Operations.

[FR Doc. 2020–07030 Filed 4–2–20; 8:45 am]

BILLING CODE 6353–01–P

COMMITTEE FOR PURCHASE FROM PEOPLE WHO ARE BLIND OR SEVERELY DISABLED

Procurement List; Deletions

AGENCY: Committee for Purchase From People Who Are Blind or Severely Disabled.

ACTION: Deletions from the Procurement List.

SUMMARY: This action deletes a product and services from the Procurement List that were be furnished by nonprofit agencies employing persons who are blind or have other severe disabilities.

DATES: *Date deleted from the Procurement List:* May 3, 2020.

ADDRESSES: Committee for Purchase From People Who Are Blind or Severely Disabled, 1401 S Clark Street, Suite 715, Arlington, Virginia 22202–4149.

FOR FURTHER INFORMATION CONTACT: Michael R. Jurkowski, Telephone: (703) 603–2117, Fax: (703) 603–0655, or email *CMTEFedReg@AbilityOne.gov.*

SUPPLEMENTARY INFORMATION: This notice is published pursuant to 41 U.S.C. 8503(a)(2) and 41 CFR 51–2.3. Its purpose is to provide interested persons an opportunity to submit comments on the proposed actions.

Deletions

On 2/28/2020, the Committee for Purchase From People Who Are Blind or Severely Disabled published notice of proposed deletions from the Procurement List.

After consideration of the relevant matter presented, the Committee has determined that the product and services listed below are no longer suitable for procurement by the Federal Government under 41 U.S.C. 8501–8506 and 41 CFR 51–2.4.

Regulatory Flexibility Act Certification

I certify that the following action will not have a significant impact on a substantial number of small entities. The major factors considered for this certification were:

1. The action will not result in additional reporting, recordkeeping or other compliance requirements for small entities.

2. The action may result in authorizing small entities to furnish the product and services to the Government.

3. There are no known regulatory alternatives which would accomplish the objectives of the Javits-Wagner-O'Day Act (41 U.S.C. 8501–8506) in connection with the product and services deleted from the Procurement List.

End of Certification

Accordingly, the following product and services are deleted from the Procurement List:

Product

NSN—Product Name:
7920–00–926–5146—Extension, Handle, Telescoping, Aluminum, 5' to 10'L
Mandatory Source of Supply: Arizona Industries for the Blind, Phoenix, AZ
Contracting Activity: GSA/FSS GREATER SOUTHWEST ACQUISITI, FORT WORTH, TX

Services

Service Type: Form/Publication Storage & Distribution
Mandatory for: Department of Agriculture, Landover, MD
Contracting Activity: AGRICULTURE, DEPARTMENT OF, PROCUREMENT OPERATIONS DIVISION
Service Type: Mailing Services
Mandatory for: Bureau of Public Debt: 200 Third Street, Parkersburg, WV
Mandatory Source of Supply: SW Resources, Inc., Parkersburg, WV
Contracting Activity: TREASURY, DEPARTMENT OF THE, DEPT OF TREAS/

Service Type: Grounds Maintenance
Mandatory for: Social Security Administration: 300 North Greene Street, Metro West Complex, Baltimore, MD
Mandatory Source of Supply: The Arc Baltimore, Inc., Baltimore, MD
Contracting Activity: SOCIAL SECURITY ADMINISTRATION, SOCIAL SECURITY ADMINISTRATION
Service Type: Janitorial/Custodial
Mandatory for: Defense Logistics Agency: Depot, Somerville, NJ
Contracting Activity: DEFENSE LOGISTICS AGENCY, DLA SUPPORT SERVICES—DSS
Service Type: Janitorial/Custodial
Mandatory for: Agriculture Cotton Annex: 14th and Independence Avenue, Washington, DC
Mandatory Source of Supply: Melwood Horticultural Training Center, Inc., Upper Marlboro, MD
Contracting Activity: DEPT OF THE NAVY, U S FLEET FORCES COMMAND
Service Type: File Maintenance
Mandatory for: VA Medical Center, Northport, NY
Mandatory Source of Supply: The Corporate Source, Inc., Garden City, NY
Contracting Activity: VETERANS AFFAIRS, DEPARTMENT OF, NAC
Service Type: Mailing Services
Mandatory for: Various Government Agencies in the DC Metro Area
Contracting Activity: COMMITTEE FOR PURCHASE FROM PEOPLE WHO ARE BLIND OR SEVERELY DISABLED, CONTRACTING
Service Type: Metal Machining
Mandatory Source of Supply: ServiceSource, Inc., Oakton, VA
Contracting Activity: COMMERCE, DEPARTMENT OF, COMMERCE, DEPARTMENT OF
Service Type: Microfilm Stripping
Mandatory Source of Supply: Navigations, Incorporated, Battle Creek, MI
Contracting Activity: DEFENSE LOGISTICS AGENCY, DLA SUPPORT SERVICES—DSS
Service Type: Keypunch & Verification
Mandatory Source of Supply: Davis Memorial Goodwill Industries, Washington, DC
Contracting Activity: COMMERCE, DEPARTMENT OF, COMMERCE, DEPARTMENT OF
Service Type: Affix Labels—Patent Document
Mandatory Source of Supply: Linden Resources, Inc., Arlington, VA
Contracting Activity: COMMERCE, DEPARTMENT OF, COMMERCE, DEPARTMENT OF
Service Type: Grounds Maintenance
Mandatory for: Auburn Field Office-BoR: Auburn Field Office, Auburn, CA
Contracting Activity: OFFICE OF POLICY, MANAGEMENT, AND BUDGET, NBC ACQUISITION SERVICES DIVISION
Service Type: Janitorial/Custodial
Mandatory for: National Weather Service: Los Angeles International Airport, Los Angeles, CA
Contracting Activity: COMMERCE, DEPARTMENT OF, COMMERCE, DEPARTMENT OF
Service Type: Food Service Attendant

Mandatory for: Tucson Air National Guard Base: Arizona National Guard, Tucson, AZ
Contracting Activity: DEPT OF THE AIR FORCE, FA7014 AFDW PK
Service Type: Grounds Maintenance
Mandatory for: Defense Finance and Accounting Service: Building 951, San Bernadino, CA
Mandatory Source of Supply: Lincoln Training Center and Rehabilitation Workshop, South El Monte, CA
Contracting Activity: DEPT OF THE ARMY, W40M RHCO-ATLANTIC USAHCA
Service Type: Janitorial/Custodial
Mandatory for: U.S. Coast Guard, Ketchikan, AK
Service Type: Janitorial/Custodial
Mandatory for: Veterans Affairs: Greater Los Angeles Healthcare System, East Los Angeles, CA
Mandatory Source of Supply: Job Options, Inc., San Diego, CA
Contracting Activity: VETERANS AFFAIRS, DEPARTMENT OF, NAC
Service Type: Laundry Service
Mandatory for: Everett Naval Station, Everett, WA
Mandatory Source of Supply: Northwest Center, Seattle, WA
Contracting Activity: DEPT OF THE NAVY, U S FLEET FORCES COMMAND
Service Type: Janitorial/Custodial
Mandatory for: GSA, Warehouses: WA0815KA, WA0816KA, WA0817KA, WA0821KA, WA0822KA, WA0823KA, WA0824KA, WA0825KA, WA0831KA, WA0832KA, Auburn, WA
Mandatory Source of Supply: Northwest Center, Seattle, WA
Contracting Activity: GENERAL SERVICES ADMINISTRATION, FPDS AGENCY COORDINATOR
Service Type: Grounds Maintenance
Mandatory for: Lewiston Levee Parkway, Nez Perce County, ID
Mandatory Source of Supply: Opportunities Unlimited, Inc.—Deleted, Lewiston, ID
Contracting Activity: DEPT OF THE ARMY, W40M RHCO-ATLANTIC USAHCA
Service Type: Janitorial/Custodial
Mandatory for: Airport Building: 9120 NE 47th, Portland, OR
Mandatory Source of Supply: Relay Resources, Portland, OR
Contracting Activity: ENERGY, DEPARTMENT OF, HEADQUARTERS PROCUREMENT SERVICES
Service Type: Janitorial/Custodial
Mandatory for: Social Security Administration Building: 175 East 100 North, Provo, UT
Contracting Activity: GENERAL SERVICES ADMINISTRATION, FPDS AGENCY COORDINATOR
Service Type: Grounds Maintenance
Mandatory for: Naval Station, Treasure Island, CA
Contracting Activity: DEPT OF THE NAVY, U S FLEET FORCES COMMAND
Service Type: Mailing Services
Mandatory for: Government Printing Office: 710 North Capitol & H Street NW, Washington, DC
Mandatory Source of Supply: MVLE, Inc., Springfield, VA
Contracting Activity: Government Printing Office
Service Type: Janitorial/Custodial
Mandatory for: U.S. Army Reserve Center: 360 West California Avenue, Memphis, TN
Mandatory Source of Supply: Shelby Residential and Vocational Services, Inc.—Deleted, Memphis, TN
Contracting Activity: DEPT OF THE ARMY, W40M RHCO–ATLANTIC USAHCA
Service Type: Facility Support Services
Mandatory for: Internal Revenue Service: Martinsburg Computing Center, Kearneysville, KW
Service Type: Janitorial/Custodial
Mandatory for: Federal Complex: 1500 East Bannister Road and 9240 Troost, Kansas City, MO
Mandatory Source of Supply: JobOne, Independence, MO
Contracting Activity: GENERAL SERVICES ADMINISTRATION, FPDS AGENCY COORDINATOR
Service Type: Janitorial/Custodial
Mandatory for: U.S. Post Office and Courthouse, Dubuque, IA
Contracting Activity: GENERAL SERVICES ADMINISTRATION, FPDS AGENCY COORDINATOR
Service Type: Janitorial/Custodial
Mandatory for: Lock and Dam 19, Keokuk, IA
Contracting Activity: DEPT OF THE ARMY, W07V ENDIST ROCK ISLAND
Service Type: Janitorial/Custodial
Mandatory for: U.S. Army Reserve Center: General J. Summer Jones, Wheeling, WV
Contracting Activity: DEPT OF THE ARMY, W40M RHCO–ATLANTIC USAHCA
Service Type: Administrative Services
Mandatory for: Internal Revenue Service, Constellation Centre Building, Oxon Hill, MD, Oxon Hill, MD
Mandatory Source of Supply: Melwood Horticultural Training Center, Inc., Upper Marlboro, MD
Contracting Activity: INTERNAL REVENUE SERVICE, DEPT OF TREAS/INTERNAL REVENUE SERVICE
Service Type: Grounds Maintenance
Mandatory for: Veterans Affairs Medical Center, Salisbury, NC
Contracting Activity: VETERANS AFFAIRS, DEPARTMENT OF, NAC
Service Type: Grounds Maintenance
Mandatory for: USDA–ARS–SEFTNRL, Byron, GA
Contracting Activity: AGRICULTURAL RESEARCH SERVICE, DEPT OF AGRIC/AGRICULTURAL RESEARCH SERVICE
Service Type: Operation of Self Service Supply Store
Mandatory for: U.S. Army Space & Missile Defense Command, Arlington, VA
Mandatory Source of Supply: ServiceSource, Inc., Oakton, VA
Contracting Activity: DEPT OF THE ARMY, W40M RHCO–ATLANTIC USAHCA
Service Type: Repair of Repair of Toolbox & Rollaway
Mandatory for: Robins Air Force Base, Robins AFB, GA
Contracting Activity: DEPT OF THE AIR FORCE, FA8501 AFSC PZIO
Service Type: Laundry Service
Mandatory for: Bangor Naval Sub Base BOQ & BEQ, Bremerton, WA
Mandatory for: Puget Sound Naval Shipyard: Galley and Bachelor Officers' Quarters (BOQ), Bremerton, WA
Mandatory Source of Supply: Northwest Center, Seattle, WA
Contracting Activity: DEPT OF THE NAVY, NAVSUP FLT LOG CTR PUGET SOUND
Service Type: Administrative Services
Mandatory for: Department of Energy: 1000 Independence Avenue SW, Forrestal Building, Washington, DC
Mandatory Source of Supply: Didlake, Inc., Manassas, VA
Contracting Activity: ENERGY, DEPARTMENT OF, HEADQUARTERS PROCUREMENT SERVICES
Service Type: Vehicle Maintenance Services
Mandatory for: Aberdeen Proving Ground, Aberdeen, MD
Mandatory Source of Supply: Alliance, Inc., Baltimore, MD
Contracting Activity: FEDERAL ACQUISITION SERVICE, GSA/FTS ACQUISITION SERVICES DIVISION
Service Type: Janitorial/Custodial
Mandatory for: U.S. Geological Survey: Klamath Field Station, 2795 Anderson Ave., Suite 106, Klamath Falls, OR
Mandatory Source of Supply: Klamath County Mental Health—Deleted, Klamath Falls, OR
Contracting Activity: OFFICE OF POLICY, MANAGEMENT, AND BUDGET, NBC ACQUISITION SERVICES DIVISION
Service Type: Parts Sorting -Hardware/Small Hand Tool & Denumbering, Parts Sorting-Denumbering of Common Handheld Tools
Mandatory for: Robins Air Force Base, Robins AFB, GA
Contracting Activity: DEPT OF THE AIR FORCE, FA8501 AFSC PZIO
Service Type: Laundry Service
Mandatory for: US Army, Asymmetric Warfare Training Center, Fort A.P. Hill, VA, Fort A.P. Hill, VA
Mandatory Source of Supply: Rappahannock Goodwill Industries, Inc., Fredericksburg, VA
Contracting Activity: DEPT OF THE ARMY, W6QK ACC–APG DIR
Service Type: Janitorial/Custodial
Mandatory for: Government Printing Office: 7701 Southern Drive, Springbelt Warehouse, Springfield, VA
Mandatory Source of Supply: Davis Memorial Goodwill Industries, Washington, DC
Contracting Activity: Government Printing Office

Michael R. Jurkowski,

Deputy Director, Business & PL Operations.

[FR Doc. 2020–07028 Filed 4–2–20; 8:45 am]

BILLING CODE 6353–01–P

CONSUMER PRODUCT SAFETY COMMISSION

Commission Agenda and Priorities; Notice of Extension of Time for Comments

AGENCY: U.S. Consumer Product Safety Commission.

ACTION: Comment request.

SUMMARY: On March 5, 2020, the U.S. Consumer Product Safety Commission (CPSC or Commission) published a notice announcing a public hearing and request for written comments and oral presentations concerning the Commission's agenda and priorities for fiscal years 2021 and 2022. The CPSC has postponed, until further notice, the public hearing. However, the Commission is extending the comment period for written comments until May 1, 2020.

DATES: Submit comments by 5 p.m. EDT on May 1, 2020.

ADDRESSES: Written comments should be captioned, ''Agenda and Priorities FY 2021 and/or 2022,'' and sent by electronic mail (email) to: *cpsc-os@cpsc.gov,* or mailed or delivered to the Division of the Secretariat, U.S. Consumer Product Safety Commission, 4330 East-West Highway, Bethesda, MD 20814. Written comments must be received no later than 5 p.m. EDT on May 1, 2020.

FOR FURTHER INFORMATION CONTACT: Alberta E. Mills, Division of the Secretariat, U.S. Consumer Product Safety Commission, 4330 East-West Highway, Bethesda, MD 20814; email: *cpsc-os@cpsc.gov;* telephone: (301) 504–7923; facsimile: (301) 504–0127. An electronic copy of the CPSC's budget request for fiscal year 2020 and the CPSC's 2018–2022 Strategic Plan can be found at: *www.cpsc.gov/about-cpsc/agency-reports/performance-and-budget.*

SUPPLEMENTARY INFORMATION: Section 4(j) of the Consumer Product Safety Act (CPSA) (15 U.S.C. 2053(j)) requires the Commission to establish an agenda for action under the laws the Commission administers, and to the extent feasible, select priorities for action at least 30 days before the beginning of each fiscal year. Section 4(j) of the CPSA provides further that before establishing its agenda and priorities, the Commission shall conduct a public hearing and provide an opportunity for the submission of comments.

On March 5, 2020, the CPSC published notice of public hearing in the **Federal Register** to announce that a priorities hearing would be conducted on April 15, 2020 (85 FR 12908). The Commission requested, by April 1, 2020, written comments and oral presentations concerning the Commission's agenda and priorities for fiscal years 2021 and 2022. Due to the extraordinary circumstances surrounding COVID–19, the Commission has postponed the hearing until further notice. However, the Commission invites written comments on the priorities as presented in the CPSC's Budget Request for fiscal year 2021, and extends the comment period until May 1, 2020. The FY 2021 Budget Request can be found at: *www.cpsc.gov/about-cpsc/agency-reports/performance-and-budget.* Please submit written comments as provided under the **ADDRESSES** section. Written comments must be received no later than 5 p.m. EDT on May 1, 2020.

Alberta E. Mills,

Secretary, U.S. Consumer Product Safety Commission.

[FR Doc. 2020–06944 Filed 4–2–20; 8:45 am]

BILLING CODE 6355–01–P

DEPARTMENT OF DEFENSE

Office of the Secretary

[Docket ID: DoD–2020–OS–0039]

Privacy Act of 1974; System of Records

AGENCY: Defense Human Resources Activity, Department of Defense (DoD).

ACTION: Notice of a modified System of Records.

SUMMARY: The Office of the Secretary of Defense (OSD) is modifying a System of Records titled, ''National Security Education Program—Information Technology (NSEP–IT) System,'' DHRA 09. The modifications will update the System of Records Notice (SORN) to meet OMB Circular No. A–108 requirements, and specifically add new system components (National Security Education Program (NSEP) Network (NSEPnet), Student Certification System, and NSEP Grants Database), and expand the categories of records collected as required by a recent statutory change. The SORN enables the NSEP to provide the public with educational resources and provides the NSEP the ability to collect information necessary to select qualified candidates for scholarships and fellowships.

DATES: This System of Records modification is effective upon publication; however, comments on the Routine Uses will be accepted on or before May 4, 2020. The Routine Uses are effective at the close of the comment period.

ADDRESSES: You may submit comments, identified by docket number and title, by any of the following methods:

* *Federal Rulemaking Portal: https://www.regulations.gov.*

Follow the instructions for submitting comments.

* *Mail:* Department of Defense, Office of the Chief Management Officer, Directorate for Oversight and Compliance, 4800 Mark Center Drive, Mailbox #24, Suite 08D09, Alexandria, VA 22350–1700.

Instructions: All submissions received must include the agency name and docket number for this **Federal Register** document. The general policy for comments and other submissions from members of the public is to make these submissions available for public viewing on the internet at *https://www.regulations.gov* as they are received without change, including any personal identifiers or contact information.

FOR FURTHER INFORMATION CONTACT: Ms. Luz D. Ortiz, Chief, Records, Privacy and Declassification Division (RPDD), 1155 Defense Pentagon, Washington, DC 20311–1155, or by phone at (571) 372–0478.

SUPPLEMENTARY INFORMATION: The following SORN sections have been updated: System Location, System Manager(s), Authority for Maintenance of the System, Categories of Individuals Covered by the System, Categories of Records in the System, Record Source Categories, Routine Uses of Records Maintained in the System, Including Categories of Users and the Purpose of Such Uses, Policies and Practices for Storage of Records, Policies and Practices for Retrieval of Records, Policies and Practices for Retention and Disposal of Records, Administrative, Physical, and Technical Safeguards, Record Access Procedures, and Notification Procedures.

The OSD notices for Systems of Records subject to the Privacy Act of 1974, as amended, have been published in the **Federal Register** and are available from the address in **FOR FURTHER INFORMATION CONTACT** or at the Defense Privacy, Civil Liberties, and Transparency Division website at *https://dpcld.defense.gov.*

The proposed systems reports, as required by of the Privacy Act, as amended, were submitted on January 14, 2020, to the House Committee on Oversight and Reform, the Senate Committee on Homeland Security and Governmental Affairs, and the Office of Management and Budget (OMB) pursuant to Section 6 to OMB Circular No. A–108, ''Federal Agency Responsibilities for Review, Reporting, and Publication under the Privacy Act,'' revised December 23, 2016 (December 23, 2016, 81 FR 94424).

Dated: March 30, 2020.

Aaron T. Siegel,

Alternate OSD Federal Register Liaison Officer, Department of Defense.

SYSTEM NAME AND NUMBER:

National Security Education Program—Information Technology (NSEP–IT) System, DHRA 09.

SECURITY CLASSIFICATION:

Unclassified.

SYSTEM LOCATION:

Amazon Web Services (AWS), US West, Astoria, OR 97103.

Institute of International Education, 1400 K Street NW, Suite 650, Washington, DC 20005–2403.

SYSTEM MANAGER(S):

Program Manager, Defense Language and National Security Education Office, National Security Education Program, 4800 Mark Center Drive, Suite 08G08, Alexandria, VA 22350–1500, *nsep@nsep.gov,* 571–256–0702.

AUTHORITY FOR MAINTENANCE OF THE SYSTEM:

50 U.S.C. 1901, David L. Boren National Security Education Act of 1991; 32 CFR 32.51, DoD Grant and Agreement Regulations Monitoring and Reporting Program Performance; DoD Instruction 1025.02, NSEP and NSEP Service Agreement; and E.O. 9397 (SSN), as amended.

PURPOSE(S) OF THE SYSTEM:

The NSEP–IT system is a comprehensive data collection system for tracking student progress within institutional academic programs, and recording federal service requirements. The system consists of three components: NSEPnet, the Student Certification System (SCS), and the NSEP Grants Database. Information is maintained in the SCS by the NSEP institutional academic programs for coding and tracking participating students in DoD funded educational programs. NSEPnet maintains records of all NSEP award recipients to track recipient progress towards fulfilling their service requirement. NSEP Grants Database data is used to produce performance reporting metrics on institutions of higher education receiving NSEP institutional grant funding. Also, these records are used as a management tool for statistical analysis, tracking, reporting, and evaluating program effectiveness.

CATEGORIES OF INDIVIDUALS COVERED BY THE SYSTEM:

Individuals applying for and receiving David L. Boren Scholarships, English for Heritage Language Speakers (EHLS) Scholarships, David L. Boren Fellowships, and Flagship Fellowships; Individual students participating in university programs with NSEP-funded grants for implementing ''The Language Flagship'' or ''Project Global Officer'' language training programs.

CATEGORIES OF RECORDS IN THE SYSTEM:

Individual Scholarship/Fellowship recipients' title, full name, current address, permanent address, Social Security Number (SSN), current telephone number, permanent telephone number, email address, date of birth, country or state of birth, citizenship status, education, region, country, and, prior military service, gender, race/ethnicity, position title, security clearance held for position, award type, date of award completion, graduation date, length of service requirement, date of availability for work, information on veterans preference, Federal employment history, preferences with regard to being contacted by intelligence agencies. For two of the NSEP institutional grant programs, The Language Flagship and Project Global Officer and the Student Certification System (SCS) collect the following participant information: full name, current address, permanent address, current telephone number, permanent telephone number, email address, date of birth, citizenship status, prior military service, gender, and race/ethnicity.

RECORD SOURCE CATEGORIES:

Individuals, and academic institutions.

ROUTINE USES OF RECORDS MAINTAINED IN THE SYSTEM, INCLUDING CATEGORIES OF USERS AND PURPOSES OF SUCH USES:

In addition to those disclosures generally permitted under 5 U.S.C. 552a(b) of the Privacy Act of 1974, as amended, these records contained herein may specifically be disclosed outside the DoD as a routine use pursuant to 5 U.S.C. 552a(b)(3) as follows:

a. To institutions of higher education who receive grant funding via The Language Flagship and Project Global Officer (Project GO) who use this for the monitoring and tracking of their own students participating in these programs.

b. To the Institute for International Education for monitoring the performance of The Language Flagship and Project GO institutional programs and student performance in these programs, as well as reviewing and validating NSEP awardee information and repayments.

c. To the American Councils for International Education for the input of student proficiency scores for students assessed using their assessments.

d. To The Boren Forum, the non-profit NSEP alumni organization, to confirm the name, award year, and type of award of NSEP award recipients.

e. To consumer reporting agencies pursuant to guidance under 5 U.S.C. 552a(b)(12) as defined in the Fair Credit Reporting Act (14 U.S.C. 1681a(f)) or the Federal Claims Collection Act of 1966 (31 U.S.C. 3701(a)(3)). Disclosure aids in the collection of outstanding debts owed to the Federal Government. Disclosure is limited to name, address, and taxpayer identification number/SSN; the amount, status, and history of the claim; and the agency or program under which the claim arose.

f. To the U.S. Department of Treasury (Treasury) for individuals not compliant with the Service Agreement and who fail to pay back awards. Their name, address, and taxpayer identification number/SSN including the amount, status, and history of the claim are sent to the Treasury for collection.

g. To authorized federal hiring officials for the purpose of recruiting of NSEP award recipients into federal service, and assisting NSEP award recipients in fulfilling their Congressionally-mandated service requirement.

h. To contractors, grantees, experts, consultants, students, and others performing or working on a contract, service, grant, cooperative agreement, or other assignment for the federal government when necessary to accomplish an agency function related to this System of Records. Individuals provided information under this routine use are subject to the same Privacy Act requirements and limitations on disclosure that apply to DoD officers and employees.

i. To the appropriate Federal, State, local, territorial, tribal, foreign, or international law enforcement authority or other appropriate entity where a record, either alone or in conjunction with other information, indicates a violation or potential violation of law, whether criminal, civil, or regulatory in nature.

j. To any component of the Department of Justice for the purpose of representing the DoD, or its components, officers, employees, or members in pending or potential litigation to which the record is pertinent.

k. In an appropriate proceeding before a court, grand jury, or administrative or adjudicative body or official, when the DoD or other Agency representing the

DoD determines that the records are relevant and necessary to the proceeding; or in an appropriate proceeding before an administrative or adjudicative body when the adjudicator determines the records to be relevant to the proceeding.

l. To the National Archives and Records Administration for the purpose of records management inspections conducted under the authority of 44 U.S.C. 2904 and 2906.

m. To a Member of Congress or staff acting upon the Member's behalf when the Member or staff requests the information on behalf of, and at the request of, the individual who is the subject of the record.

n. To appropriate agencies, entities, and persons when (1) the DoD suspects or confirms a breach of the System of Records; (2) the DoD determines as a result of the suspected or confirmed breach there is a risk of harm to individuals, the DoD (including its information systems, programs, and operations), the Federal Government, or national security; and (3) the disclosure made to such agencies, entities, and persons is reasonably necessary to assist in connection with the DoD's efforts to respond to the suspected or confirmed breach or to prevent, minimize, or remedy such harm.

o. To another Federal agency or Federal entity, when the DoD determines information from this System of Records is reasonably necessary to assist the recipient agency or entity in (1) responding to a suspected or confirmed breach or (2) preventing, minimizing, or remedying the risk of harm to individuals, the recipient agency or entity (including its information systems, programs and operations), the Federal Government, or national security, resulting from a suspected or confirmed breach.

POLICIES AND PRACTICES FOR STORAGE OF RECORDS:

Electronic storage media.

POLICIES AND PRACTICES FOR RETRIEVAL OF RECORDS:

Records are retrieved by last name, first name, institution, and language.

POLICIES AND PRACTICES FOR RETENTION AND DISPOSAL OF RECORDS:

Unsuccessful NSEP student award applications—Destroy after 5 years.

Successful institutional grant reports—Destroy after 10 years.

Records of language acquisition progress among students; successful NSEP student award applications; and records of service requirement fulfillment among NSEP student award recipients—Destroy after 30 years.

ADMINISTRATIVE, PHYSICAL, AND TECHNICAL SAFEGUARDS:

Physical/digital access to records is restricted to those requiring the data in the performance of their official duties. Physical entry to data servers is restricted by locks, guards, and administrative procedures. The NSEP–IT system maintains all data storage at an off-site facility, which meets all DoD and National Institute Standard of Technology requirements for data security. The facility requires identification badges for access. Additionally, access to system data requires a Common Access Card and a personal identification number. In addition, system entry requires that program passwords be changed every 180 days.

The following technical controls restrict access to those requiring the data in the performance of their official duties: Intrusion detection system; encryption; external Certificate Authority certificate; firewall; and, DoD Public Key Infrastructure certificates. Personally Identifiable Information (PII) is encrypted when transmitted electronically. Administrative controls restrict access to those requiring the data in the performance of their official duties or for reporting purposes: Periodic security audits; regular monitoring of users' security practices; methods to ensure only authorized personnel may access PII; encryption of backups containing sensitive data. Additionally, contract officers must follow all appropriate Privacy Act clauses. Also, contractor personnel must sign nondisclosure documents certifying their adherence to the provisions of the Privacy Act.

RECORD ACCESS PROCEDURES:

Individuals seeking access to records about themselves contained in this system should address written inquiries to the Office of the Secretary of Defense/Joint Staff, Freedom of Information Act Requester Service Center, Office of Freedom of Information, 1155 Defense Pentagon, Washington, DC 20301–1155. Signed written requests should contain full name, SSN, current address and telephone number of the individual, and the name and number of this SORN. In addition, the requester must provide either a notarized statement or an unsworn declaration made in accordance with 28 U.S.C. 1746, in the following format:

If executed outside the United States: ''I declare (or certify, verify, or state) under penalty of perjury under the laws of the United States of America that the foregoing is true and correct. Executed on (date). (Signature).''

If executed within the United States, its territories, possessions, or commonwealths: ''I declare (or certify, verify, or state) under penalty of perjury that the foregoing is true and correct. Executed on (date). (Signature).''

CONTESTING RECORD PROCEDURES:

The DoD rules for accessing records, contesting contents, and appealing initial agency determinations are contained in 32 CFR part 310, or may be obtained from the system manager.

NOTIFICATION PROCEDURES:

Individuals seeking to determine whether information about themselves is contained in this system should address written inquiries to NSEP–IT, Defense Language and National Security Education Office (DLNSEO), 4800 Mark Center Drive, Suite 08G08, Alexandria, VA 22350–1500. Signed written requests should contain full name, SSN, current address and telephone number of the individual, and the name and number of this SORN. In addition, the requester must provide either a notarized statement or an unsworn declaration made in accordance with 28 U.S.C. 1746, in the following format:

If executed outside the United States: ''I declare (or certify, verify, or state) under penalty of perjury under the laws of the United States of America that the foregoing is true and correct. Executed on (date). (Signature).''

If executed within the United States, its territories, possessions, or commonwealths: ''I declare (or certify, verify, or state) under penalty of perjury that the foregoing is true and correct. Executed on (date). (Signature).''

EXEMPTIONS PROMULGATED FOR THE SYSTEM:

None.

HISTORY:

79 FR 19585, April 09, 2014.

[FR Doc. 2020–06965 Filed 4–2–20; 8:45 am]

BILLING CODE 5001–06–P

DEPARTMENT OF EDUCATION

Applications for New Awards; Teacher and School Leader Incentive Program

AGENCY: Office of Elementary and Secondary Education, Department of Education.

ACTION: Notice.

SUMMARY: The Department of Education (Department) is issuing a notice inviting applications for fiscal year (FY) 2020 for the Teacher and School Leader Incentive Program (TSL), Catalog of Federal Domestic Assistance (CFDA) number 84.374A. This notice relates to

the approved information collection under OMB control number 1894–0006.

DATES: *Applications Available:* April 3, 2020.

Pre-Application Webinars: The Office of Elementary and Secondary Education intends to post pre-recorded informational webinars designed to provide technical assistance to interested applicants for TSL grants. These informational webinars will be available on the TSL web page shortly after this notice is published in the **Federal Register** at *oese.ed.gov/offices/office-of-discretionary-grants-support-services/effective-educator-development-programs/teacher-and-school-leader-incentive-program/applicant-info-eligibility.* A TSL Frequently Asked Questions document will also be published on the TSL program web page as soon as it is available at *https://oese.ed.gov/offices/office-of-discretionary-grants-support-services/effective-educator-development-programs/teacher-and-school-leader-incentive-program/.*

Deadline for Notice of Intent to Apply: May 4, 2020.

Deadline for Transmittal of Applications: June 2, 2020.

Deadline for Intergovernmental Review: August 3, 2020.

ADDRESSES: For the addresses for obtaining and submitting an application, please refer to our Common Instructions for Applicants to Department of Education Discretionary Grant Programs, published in the **Federal Register** on February 13, 2019 (84 FR 3768), and available at *www.govinfo.gov/content/pkg/FR-2019-02-13/pdf/FR-2019-02-13/pdf/2019-02206.pdf.*

FOR FURTHER INFORMATION CONTACT: Patricia Searles, U.S. Department of Education, 400 Maryland Avenue SW., room 3C122, Washington, DC 20202–5960. Telephone: (202) 205–3869. Email: *Patricia.Searles@ed.gov* or *TSL@ed.gov.*

If you use a telecommunications device for the deaf (TDD) or a text telephone (TTY), call the Federal Relay Service (FRS), toll free, at 1–800–877–8339.

SUPPLEMENTARY INFORMATION:

Full Text of Announcement

I. Funding Opportunity Description

Purpose of Program: The purpose of TSL is to assist States, Local Educational Agencies (LEAs), and nonprofit organizations to develop, implement, improve, or expand comprehensive Performance-Based Compensation Systems (PBCS) [1] or Human Capital Management Systems (HCMS) for teachers, principals, and other School Leaders (especially for teachers, principals, and other School Leaders in High-Need Schools who raise student academic achievement and close the achievement gap between high- and low-performing students). In addition, a portion of TSL funds may be used to study the effectiveness, fairness, quality, consistency, and reliability of PBCS or HCMS for teachers, principals, and other School Leaders (educators).

Background: TSL is authorized under section 2212 of the Elementary and Secondary Education Act of 1965, as amended by the Every Student Succeeds Act (ESEA).

The FY 2020 TSL competition is designed to support entities in implementing, improving, or expanding their HCMS, which by definition must include a PBCS, or implementing, improving, or expanding only a PBCS and establishes an absolute priority consistent with this purpose. TSL is also intended to primarily serve educators in High-Need Schools who raise student academic achievement and close the achievement gap between high- and low-performing students, although the program may also fund services for educators serving in high-need subject areas (though not necessarily in High-Need Schools), as determined by the LEA or the State.

In 2017, all 50 States, the District of Columbia, and the Commonwealth of Puerto Rico submitted ESEA Consolidated State Plans that describe their efforts to ensure equitable access to excellent educators. These State plans describe how the State would ensure that low-income and minority children in Title I, Part A schools are not taught by inexperienced, ineffective, or out-of-field teachers at higher rates than other children. In addition, many States and LEAs have worked to create and improve their comprehensive HCMS, and LEAs have invested in high-quality educator evaluation and support systems in order to improve recruitment efforts, provide educators with meaningful feedback and targeted professional development, and use information on educator performance to inform key school- and district-level decisions. While an increasing number of LEAs are well equipped to make human capital decisions that both support educators and improve student outcomes, additional work is needed to ensure that these educator evaluation and support systems are fair, reliable, and credible; conducive to enhancing educator growth and advancement; likely to support improved student outcomes; and seamlessly integrated into school- and district-level human capital processes. Thus, through the two absolute priorities listed in this notice, the Department seeks to ensure that this competition supports States and LEAs in their efforts to implement goals and objectives in State plans as well as lessons learned from close to two decades of investment and research in HCMS and PBCS.

In addition to the absolute priority reinforcing the need to serve educators primarily in High-Need Schools and areas, this notice includes a competitive preference priority for projects that would be carried out in areas that overlap with a Qualified Opportunity Zone (QOZ). Public Law (Pub. L.) 115–97, known as the Tax Cuts and Jobs Act, authorized the designation of QOZs to promote economic development and job creation in distressed communities through preferential tax treatment for investors. A list of QOZs is available at *www.cdfifund.gov/Pages/Opportunity-Zones.aspx;* applicants may also determine whether a particular area overlaps with a QOZ using the National Center of Education Statistics' map located at *https://nces.ed.gov/programs/maped/LocaleLookup/.* To receive competitive preference points under this priority, applicants must provide the Department with the census tract number of the QOZ they plan to serve and describe the services they will provide. For the purposes of this competition, applicants should consider the area where schools being served by TSL funds are located.

In order to support different LEAs in developing and implementing comprehensive HCMS designed to ensure all students have equitable access to high-quality instruction, this notice also contains a competitive preference priority for new potential grantees. Under ESEA section 2212(b)(3), an LEA may only receive a TSL grant twice. In furtherance of this goal to limit the number of TSL grants an LEA may receive, the competitive preference priority encourages new potential grantees to apply for a TSL grant by awarding additional points for those applicants who either have never received a TSL or Teacher Incentive Fund (TIF) grant, or who have not had an active TSL or TIF grant in the past five years.

Priorities: This notice contains two absolute priorities and two competitive preference priorities. In accordance with 34 CFR 75.105(b)(2)(v), the two absolute priorities are from ESEA sections

[1] Throughout this notice, all defined terms are denoted with capitals.

2212(e)(1) and (d)(1), respectively. In accordance with 34 CFR 75.105(b)(2)(ii), Competitive Preference Priority 1 is from the notice of final priority published in the **Federal Register** on November 27, 2019 (84 FR 65300) (Opportunity Zones NFP); and Competitive Preference Priority 2 is from the Secretary's Final Administrative Priorities for Discretionary Grant Programs published in the **Federal Register** on March 9, 2020 (85 FR 13640) (Administrative Priorities).

Absolute Priority: For FY 2020 and any subsequent year in which we make awards from the list of unfunded applications from this competition, these priorities are absolute priorities. Under 34 CFR 75.105(c)(3), we consider only applications that meet both absolute priorities.

These priorities are:

Absolute Priority 1: Human Capital Management Systems (HCMS) or Performance Based Compensation Systems (PBCS).

Under this priority, eligible applicants must propose a project to develop, implement, improve, or expand, in collaboration with teachers, principals, other School Leaders, and members of the public, a PBCS or HCMS.

Note: Under section 2212(c)(4) of the ESEA, applicants must describe how the eligible entity will develop and implement a fair, rigorous, valid, reliable, and objective process to evaluate educator performance under the system that is based in part on measures of student academic achievement, including the baseline performance against which evaluations of improved performance will be made. In responding to this priority, applicants are encouraged to describe how their project to develop, implement, improve, or expand a PBCS or HCMS will address this application requirement. In addition, applicants that propose to use grant funds, under ESEA section 2212(e)(2)(A), to develop or improve an evaluation and support system as part of an HCMS, in responding to this priority, should describe how such system (i) reflects clear and fair measures of educator performance, based in part on demonstrated improvement in student academic achievement; and (ii) provides educators with ongoing, differentiated, targeted, and personalized support and feedback for improvement, including professional development opportunities designed to increase effectiveness.

Absolute Priority 2: High-Need Schools.

Under this priority, eligible applicants must concentrate the activities proposed to be assisted under the grant on teachers, principals, or other School Leaders serving in High-Need Schools.[2]

Competitive Preference Priorities: For FY 2020 and any subsequent year in which we make awards from the list of unfunded applications from this competition, these priorities are competitive preference priorities. Under 34 CFR 75.105(c)(2)(i), we award up to 10 points to an application, depending on how well the application meets Competitive Preference Priority 1; and we award an additional 5 points to an application that meets paragraph (a)(i), or an additional 2 points to an application that meets paragraph (a)(ii), of Competitive Preference Priority 2. An application may be awarded a maximum of 15 additional points under the competitive preference priorities.

These priorities are:

Competitive Preference Priority 1—Spurring Investment in Qualified Opportunity Zones (up to 10 points).

Under this priority, an applicant must demonstrate that the area in which the applicant proposes to provide services overlaps with a Qualified Opportunity Zone, as designated by the Secretary of the Treasury under section 1400Z–1 of the Internal Revenue Code (IRC). An applicant must—

(i) Provide the census tract number of the Qualified Opportunity Zone(s) in which it proposes to provide services; and

(ii) Describe how the applicant will provide services in the Qualified Opportunity Zone(s).

Competitive Preference Priority 2—Applications from New Potential Grantees (0, 2, or 5 points).

(a) Under this priority, an applicant must demonstrate one of the following:

(i) The applicant has never received a grant, including through membership in a group application submitted in accordance with 34 CFR 75.127–75.129, under the program from which it seeks funds (0 or 5 points); or

(ii) The applicant has not had an active discretionary grant under the program from which it seeks funds, including through membership in a group application submitted in accordance with 34 CFR 75.127–75.129, in the five years before the deadline date for submission of applications under the program. (0 or 2 points)

(b) For the purpose of this priority, a grant or contract is active until the end of the grant's or contract's project or funding period, including any extensions of those periods that extend the grantee's or contractor's authority to obligate funds.

Note: For purposes of this priority, ''the program'' includes both TIF and TSL programs because they are substantially the same.

Application Requirements: For FY 2020 and any subsequent year in which we make awards from the list of unfunded applications from this competition, the following application requirements from ESEA section 2212(c) apply.

Each eligible applicant desiring a grant under this program must submit an application that contains—

(i) A description of the PBCS or HCMS that the eligible entity proposes to develop, implement, improve, or expand through the grant;

(ii) A description of the most significant gaps or insufficiencies in student access to effective educators in High-Need Schools, including gaps or inequities in how effective educators are distributed across the LEA, as identified using factors such as data on school resources, staffing patterns, school environment, educator support systems, and other school-level factors;

(iii) A description and evidence of the support and commitment from educators, which may include charter School Leaders, in the school (including organizations representing educators), the community, and the LEA to the activities proposed under the grant;

(iv) A description of how the eligible entity will develop and implement a fair, rigorous, valid, reliable, and objective process to evaluate educator performance, under the system that is based in part on measures of student academic achievement, including the baseline performance against which evaluations of improved performance will be made;

(v) A description of the LEAs or schools to be served under the grant, including student academic achievement, demographic, and socioeconomic information;

(vi) A description of the effectiveness of educators in the LEA and the schools to be served under the grant and the extent to which the system will increase the effectiveness of educators in such schools;

(vii) A description of how the eligible entity will use grant funds under this subpart in each year of the grant, including a timeline for implementation of such activities;

(viii) A description of how the eligible entity will continue the activities assisted under the grant after the grant period ends;

(ix) A description of the State, local, or other public or private funds that will be used to supplement the grant, including funds under Title II, part A of the ESEA, and sustain the activities

[2] For more information on the term ''high-need schools'' as used in this notice and, in particular, Absolute Priority 2, see the definition of ''high-need schools'' in the *Definitions* section of this notice.

assisted under the grant after the end of the grant period;

(x) A description of the rationale for the project; how the proposed activities are Evidence-Based; and, if applicable, the prior experience of the eligible entity in developing and implementing such activities; and

(xi) A description of how grant activities will be evaluated, monitored, and publicly reported.

Definitions: The definitions of ''High-Need School,'' ''Human Capital Management System,'' and ''Performance-Based Compensation System'' are from section 2211 of the ESEA. The definitions of ''Evidence-Based,'' and ''School Leader'' are from section 8101 of the ESEA. The definitions of ''Demonstrates a Rationale,'' ''Logic Model,'' ''Project Component,'' and ''Relevant Outcome'' are from 34 CFR 77.1. These definitions apply to the FY 2020 grant competition and any subsequent year in which we make awards from the list of unfunded applications from this competition.

Demonstrates a rationale means a key project component included in the project's logic model is informed by research or evaluation findings that suggest the project component is likely to improve relevant outcomes.

Evidence-based, when used with respect to a State, LEA, or school activity, means an activity, strategy, or intervention that—

(i) Demonstrates a rationale based on high-quality research findings or positive evaluation that such activity, strategy, or intervention is likely to improve student outcomes or other relevant outcomes; and

(ii) Includes ongoing efforts to examine the effects of such activity, strategy, or intervention.

High-Need School means a public elementary school or secondary school that is located in an area in which the percentage of students from families with incomes below the poverty line is 30 percent or more.

For purposes of this competition, the term ''High-Need School'' is interpreted to mean a school with 50 percent or more of its enrollment from low-income families, based on eligibility for free or reduced price lunch subsidies under the Richard B. Russell National School Lunch Act, or other poverty measures that LEAs use consistent with ESEA section 1113(a)(5) (20 U.S.C. 6313(a)(5)).[3]

Human Capital Management System (HCMS) means a system—

(i) By which an LEA makes and implements human capital decisions, such as decisions on preparation, recruitment, hiring, placement, retention, dismissal, compensation, professional development, tenure, and promotion; and

(ii) That includes a performance-based compensation system.

Logic Model (also referred to as a theory of action) means a framework that identifies key project components of the proposed project (*i.e.,* the active ''ingredients'' that are hypothesized to be critical to achieving the relevant outcomes) and describes the theoretical and operational relationships among the key project components and relevant outcomes.

Performance-Based Compensation System (PBCS) means a system of compensation for teachers, principals, or other School Leaders—

(i) That differentiates levels of compensation based in part on measurable increases in student academic achievement; and

(ii) Which may include—

(A) Differentiated levels of compensation, which may include bonus pay, on the basis of the employment responsibilities and success of effective teachers, principals, or other School Leaders in hard-to-staff schools or high-need subject areas; and

(B) Recognition of the skills and knowledge of teachers, principals, or other School Leaders as demonstrated through—

(I) Successful fulfillment of additional responsibilities or job functions, such as teacher leadership roles; and

(II) Evidence of professional achievement and mastery of content knowledge and superior teaching and leadership skills.

Project Component means an activity, strategy, intervention, process, product, practice, or policy included in a project. Evidence may pertain to an individual project component or to a combination of project components (*e.g.,* training teachers on instructional practices for English learners and follow-on coaching for these teachers).

Relevant Outcome means the student outcome(s) or other outcome(s) the key project component is designed to improve, consistent with the specific goals of the program.

School Leader means a principal, assistant principal, or other individual who is—

(i) An employee or officer of an elementary school or secondary school, LEA, or other entity operating an elementary school or secondary school; and

(ii) Responsible for the daily instructional leadership and managerial operations in the elementary school or secondary school building.

Program Authority: Sections 2211–2213 of the ESEA.

Applicable Regulations: (a) The Education Department General Administrative Regulations in 34 CFR parts 75, 77, 79, 81, 82, 84, 86, 97, 98, and 99. (b) The Office of Management and Budget Guidelines to Agencies on Governmentwide Debarment and Suspension (Non-procurement) in 2 CFR part 180, as adopted and amended as regulations of the Department in 2 CFR part 3485. (c) The Uniform Administrative Requirements, Cost Principles, and Audit Requirements for Federal Awards in 2 CFR part 200, as adopted and amended as regulations of the Department in 2 CFR part 3474. (d) The Opportunity Zones NFP. (e) The Administrative Priorities.

Note: The regulations in 34 CFR part 86 apply to IHEs only.

II. Award Information

Type of Award: Discretionary grants.

Estimated Available Funds: $65,794,850 for new awards.

Estimated Range of Awards: $500,000 to $10 million.

Note: The Department estimates a wide range of awards, given the potentially large differences in the scope of funded projects, including the size and number of participating LEAs.

Estimated Average Size of Awards: $6,579,485.

Estimated Number of Awards: 8–10.

Note: The Department is not bound by any estimates in this notice.

Project Period: Up to 36 months.

[3] The definition of ''poverty line'' in ESEA section 8101(41) requires the Department to use poverty line data gathered by the U.S. Census Bureau. However, the Department has determined that the school-level poverty-line data required by the definition of ''high-need school'' are unavailable; the U.S. Census Bureau reports these data only by LEA. As such, to ensure that awards made under this competition still focus on schools that are high-poverty, the Secretary interprets ''high-need school'' by using the same poverty measure applicable to the definition of a ''high-need school'' for the past three TIF competitions and the first TSL competition. In prior competitions, a ''high-need school'' is a school with 50 percent or more of its enrollment from low-income families, based on eligibility for free or reduced price lunch subsidies under the Richard B. Russell National School Lunch Act, or other poverty measures that LEAs use consistent with ESEA section 1113(a)(5) (20 U.S.C. 6313(a)(5)). Since the income of a family below the poverty line is much lower than the income a family needs to enable its children to be eligible for free or reduced-price lunch subsidies under the Richard B. Russell National School Lunch Act (the poverty measure used in all prior TIF and TSL competitions), we believe that use of the prior poverty measure to determine which schools are high-need is also a reasonable approach to implementing congressional intent for TSL.

III. Eligibility Information

1. *Eligible Applicants:*

(a) An LEA, including a charter school that is an LEA, or a consortium of LEAs;[4]

(b) A State educational agency (SEA) or other State agency designated by the Chief Executive of a State to participate;

(c) The Bureau of Indian Education; or

(d) A partnership[5] consisting of—

(i) One or more agencies described in paragraph (a), (b), or (c); and

(ii) At least one nonprofit organization as defined in 2 CFR 200.70 or at least one for-profit entity.

Note: The Secretary considers all schools funded by the Department of Interior's Bureau of Indian Education to be LEAs.

Applicants that are nonprofit organizations, under 34 CFR 75.51, may demonstrate their nonprofit status by providing: (1) Proof that the Internal Revenue Service currently recognizes the applicant as an organization to which contributions are tax deductible under section 501(c)(3) of the Internal Revenue Code; (2) a statement from a State taxing body or the State attorney general certifying that the organization is a nonprofit organization operating within the State and that no part of its net earnings may lawfully benefit any private shareholder or individual; (3) a certified copy of the applicant's certificate of incorporation or similar document if it clearly establishes the nonprofit status of the applicant; or (4) any item described above if that item applies to a State or national parent organization, together with a statement by the State or parent organization that the applicant is a local nonprofit affiliate.

2. a. *Cost Sharing or Matching:* Under section 2212(f) of the ESEA, each grant recipient must provide from non-Federal sources an amount equal to 50 percent of the amount of the grant (which may be provided in cash or in kind), to carry out the activities supported by the grant. Applicants and grantees should budget relative to each annual award of TSL grant funds. Applicants are strongly encouraged to take this requirement into account when requesting Federal funds and limit their requests appropriately. Applicants should verify that their budgets reflect both the requested Federal award amount and the matching contribution with appropriate cost allocations. The Secretary does not, as a matter of policy, anticipate waiving these requirements, given the importance of matching funds to the long-term success of the project.

b. *Supplement-Not-Supplant:* This program involves supplement-not-supplant funding requirements. In accordance with section 2212(g) of the ESEA, funds made available under this program must be used to supplement, and not supplant, other Federal or State funds that would otherwise be expended to carry out activities under this program. The Secretary considers all schools funded by the Department of Interior's Bureau of Indian Education to be LEAs, and the funds that these schools receive from the Department of Interior's annual appropriation to be neither Federal nor State funds. Further, the prohibition against supplanting also means that grantees seeking to charge indirect costs to TSL funds will need to use their negotiated restricted indirect cost rates. See 34 CFR 75.563 for more information.

3. *Subgrantees:* Under 34 CFR 75.708(b) and (c), a grantee under this competition may award subgrants to directly carry out project activities described in its application to the following types of entities: LEAs, SEAs, nonprofit organizations, or for-profit organizations. The grantee may award subgrants to entities it has identified in an approved application.

4. *Renewal:* Under section 2212(b)(2) of the ESEA, the Secretary may renew a grant awarded under this section for up to two additional years if the grantee demonstrates to the Secretary that the grantee is effectively using funds. Such renewal may include allowing the grantee to scale up or replicate the successful program.

Note: During the third year of the project period for grants awarded under this competition, if the Department exercises the option to offer an opportunity for renewals, the Department will provide grantees with information on the renewal process. This additional funding is intended not only to support continuation of approved project activities, but also to encourage scaling, replication, and sustainability efforts and strategies. In deciding whether to award a two-year renewal award, we intend to review performance data submitted in regularly required reporting, as well as potentially request narrative information to be assessed using selection criteria from 34 CFR 75.210.

IV. Application and Submission Information

1. *Application Submission Instructions:* Applicants are required to follow the Common Instructions for Applications to the Department of Education Discretionary Grant Programs, published in the **Federal Register** on February 13, 2019 (84 FR 3768) and available at *www.govinfo.gov/content/pkg/FR-2019-02-13/pdf/2019-02206.pdf,* which contains requirements and information on how to submit an application.

2. *Submission of Proprietary Information:* Given the types of projects that may be proposed in applications for TSL, an application may include business information that the applicant considers proprietary. In 34 CFR 5.11, we define ''business information'' and describe the process we use in determining whether any of that information is proprietary and, thus, protected from disclosure under Exemption 4 of the Freedom Act (5 U.S.C. 552, as amended). Because we plan to make successful applications available to the public, you may wish to request confidentiality of business information. Consistent with Executive Order 12600, please designate in your application any information that you believe is exempt from disclosure under Exemption 4. In the appropriate Appendix section of your application, under ''Other Attachments Form,'' please list the page number or numbers on which we can find this information. For additional information please see 34 CFR 5.11(c).

3. *Intergovernmental Review:* This program is subject to Executive Order 12372 and the regulations in 34 CFR part 79. Information about Intergovernmental Review of Federal Programs under Executive Order 12372 is in the application package for this program.

4. *Funding Restrictions:* We reference regulations outlining funding restrictions in the *Applicable Regulations* section of this notice.

5. *Recommended Page Limit:* The application narrative is where you, the applicant, address the selection criteria that reviewers use to evaluate your application. We recommend that you (1) limit the application narrative to no more than 40 pages and (2) use the following standards:

- A ''page'' is 8.5'' x 11'', on one side only, with 1'' margins at the top, bottom, and both sides.
- Double space (no more than three lines per vertical inch) all text in the application narrative, including titles, headings, footnotes, quotations, references, and captions, as well as all text in charts, tables, figures, and graphs.
- Use a font that is either 12 point or larger or no smaller than 10 pitch (characters per inch).
- Use one of the following fonts: Times New Roman, Courier, Calibri, or Arial.

[4] Consistent with ESEA section 2212(b)(3), an LEA may receive a TSL grant (whether individually or as part of an eligible consortium or partnership) only twice.

[5] See *Id.*

The recommended page limit does not apply to the cover sheet; the budget section, including the narrative budget justification; the assurances and certifications; or the one-page abstract, the resumes, the bibliography, or the letters of support. However, the recommended page limit does apply to all of the application narrative.

6. *Notice of Intent to Apply:* The Department will be able to review grant applications more efficiently if we know the approximate number of applicants who intend to apply. Therefore, we strongly encourage each potential applicant to notify us of the applicant's intent to submit an application. To do so, please email *TSL@ed.gov* with the subject line ''Intent to Apply,'' and include the applicant's name and contact person's name and email address by May 4, 2020. Applicants that do not submit a notice of intent to apply may still apply for funding; applicants that do submit a notice of intent to apply are not bound to apply or bound by the information provided.

V. Application Review Information

1. *Selection Criteria:* The following selection criteria for this competition are from 34 CFR 75.210. The maximum score for all of the selection criteria is 100 points. The maximum score for each criterion is included in parentheses following its title.

(a) *Need for Project* (25 points)

The Secretary considers the need for the proposed project. In determining evidence of the need for the proposed project, the Secretary considers the following factors:

(i) The extent to which specific gaps or weaknesses in services, infrastructure, or opportunities have been identified and will be addressed by the proposed project, including the nature and magnitude of those gaps or weaknesses.

(ii) The extent to which the proposed project will integrate with or build on similar or related efforts to improve Relevant Outcomes (as defined in 34 CFR 77.1(c)) using existing funding streams from other programs or policies supported by community, State, and Federal resources.

(iii) The extent to which the proposed project is part of a comprehensive effort to improve teaching and learning and support rigorous academic standards for students.

(iv) The extent to which the design of the proposed project is appropriate to, and will successfully address, the needs of the target population or other identified needs.

(b) *Quality of the Project Design* (30 points)

The Secretary considers the quality of the design of the proposed project. In determining the quality of the design of the proposed project, the Secretary considers the following factors:

(i) The extent to which the proposed project Demonstrates a Rationale (as defined in 34 CFR 77.1(c)).

(ii) The extent to which the methods of evaluation will provide performance feedback and permit periodic assessment of progress towards achieving intended outcomes.

(c) *Quality of the Management Plan* (20 points)

The Secretary considers the quality of the management plan for the proposed project. In determining the quality of the management plan for the proposed project, the Secretary considers the adequacy of the management plan to achieve the objectives of the proposed project on time and within budget, including clearly defined responsibilities, timelines, and milestones for accomplishing project tasks.

(d) *Adequacy of Resources* (25 points)

The Secretary considers the adequacy of resources for the proposed project. In determining the adequacy of resources for the proposed project, the Secretary considers the following factors:

(i) The likelihood that the proposed project will result in system change or improvement.

(ii) The extent to which the proposed project is likely to build local capacity to provide, improve, or expand serves that address the needs of the target population.

(iii) The extent to which the applicant demonstrates that it has the resources to operate the project beyond the length of the grant, including a multi-year financial and operating model, and accompanying plan; the demonstrated commitment of any partners; evidence of broad support from stakeholders (*e.g.,* SEAs, teachers unions) critical to the project's long-term success; or more than one of these types of evidence.

2. *Review and Selection Process:* We remind potential applicants that in reviewing applications in any discretionary grant competition, the Secretary may consider, under 34 CFR 75.217(d)(3), the past performance of the applicant in carrying out a previous award, such as the applicant's use of funds, achievement of project objectives, and compliance with grant conditions. The Secretary may also consider whether the applicant failed to submit a timely performance report or submitted a report of unacceptable quality.

In addition, in making a competitive grant award, the Secretary requires various assurances, including those applicable to Federal civil rights laws that prohibit discrimination in programs or activities receiving Federal financial assistance from the Department (34 CFR 100.4, 104.5, 106.4, 108.8, and 110.23).

3. *Risk Assessment and Specific Conditions:* Consistent with 2 CFR 200.205, before awarding grants under this competition the Department conducts a review of the risks posed by applicants. Under 2 CFR 3474.10, the Secretary may impose specific conditions and, in appropriate circumstances, high-risk conditions on a grant if the applicant or grantee is not financially stable; has a history of unsatisfactory performance; has a financial or other management system that does not meet the standards in 2 CFR part 200, subpart D; has not fulfilled the conditions of a prior grant; or is otherwise not responsible.

4. *Integrity and Performance System:* If you are selected under this competition to receive an award that over the course of the project period may exceed the simplified acquisition threshold (currently $250,000), under 2 CFR 200.205(a)(2) we must make a judgment about your integrity, business ethics, and record of performance under Federal awards—that is, the risk posed by you as an applicant—before we make an award. In doing so, we must consider any information about you that is in the integrity and performance system (currently referred to as the Federal Awardee Performance and Integrity Information System (FAPIIS)), accessible through the System for Award Management. You may review and comment on any information about yourself that a Federal agency previously entered and that is currently in FAPIIS.

Please note that, if the total value of your currently active grants, cooperative agreements, and procurement contracts from the Federal Government exceeds $10,000,000, the reporting requirements in 2 CFR part 200, Appendix XII, require you to report certain integrity information to FAPIIS semiannually. Please review the requirements in 2 CFR part 200, Appendix XII, if this grant plus all the other Federal funds you receive exceed $10,000,000.

VI. Award Administration Information

1. *Award Notices:* If your application is successful, we notify your U.S. Representative and U.S. Senators and send you a Grant Award Notification (GAN); or we may send you an email containing a link to access an electronic version of your GAN. We may notify you informally, also.

If your application is not evaluated or not selected for funding, we notify you.

2. *Administrative and National Policy Requirements:* We identify administrative and national policy requirements in the application package and reference these and other requirements in the *Applicable Regulations* section of this notice.

We reference the regulations outlining the terms and conditions of an award in the *Applicable Regulations* section of this notice and include these and other specific conditions in the GAN. The GAN also incorporates your approved application as part of your binding commitments under the grant.

3. *Open Licensing Requirements:* Unless an exception applies, if you are awarded a grant under this competition, you will be required to openly license to the public grant deliverables created in whole, or in part, with Department grant funds. When the deliverable consists of modifications to pre-existing works, the license extends only to those modifications that can be separately identified and only to the extent that open licensing is permitted under the terms of any licenses or other legal restrictions on the use of pre-existing works. Additionally, a grantee or subgrantee that is awarded competitive grant funds must have a plan to disseminate these public grant deliverables. This dissemination plan can be developed and submitted after your application has been reviewed and selected for funding. For additional information on the open licensing requirements please refer to 2 CFR 3474.20.

4. *Reporting:* (a) If you apply for a grant under this competition, you must ensure that you have in place the necessary processes and systems to comply with the reporting requirements in 2 CFR part 170 should you receive funding under the competition. This does not apply if you have an exception under 2 CFR 170.110(b).

(b) At the end of your project period, you must submit a final performance report, including financial information, as directed by the Secretary. If you receive a multiyear award, you must submit an annual performance report that provides the most current performance and financial expenditure information as directed by the Secretary under 34 CFR 75.118. The Secretary may also require more frequent performance reports under 34 CFR 75.720(c). For specific requirements on reporting, please go to *www.ed.gov/fund/grant/apply/appforms/appforms.html.*

(c) Under 34 CFR 75.250(b), the Secretary may provide a grantee with additional funding for data collection analysis and reporting. In this case the Secretary establishes a data collection period.

Note: In addition, under 34 CFR 75.591, all TSL grantees must cooperate in any evaluation of the program conducted by the Department.

5. *Performance Measures:* The goal of TSL is to support educators, particularly those in High-Need Schools, to raise student academic achievement and close the achievement gap between high- and low-performing students. We have established performance measures for this program: (a) The percentage of educators in all schools who earned performance-based compensation; (b) the percentage of educators in all High-Need Schools who earned performance-based compensation; (c) the gap between the retention rate of educators receiving performance-based compensation and the average retention rate of educators in each High-Need Schools whose educators participate in the project; (d) the number of school districts participating in a TSL grant that use educator evaluation and support systems to inform the following human capital decisions: recruitment; hiring; placement; retention; dismissal; professional development; tenure; promotion; or all of the above; (e) the number of High-Need Schools within districts participating in a TSL grant that use educator evaluation and support systems to inform the following human capital decisions: recruitment; hiring; placement; retention; dismissal; professional development; tenure; promotion; or all of the above; (f) the percentage of performance-based compensation paid to educators with State, local, or other non-TIF Federal resources; (g) the percentage of teachers and principals who receive the highest effectiveness rating; and (8) the percentage of teachers and principals in High-Need Schools who receive the highest effectiveness rating.

6. *Continuation Awards:* In making a continuation award under 34 CFR 75.253, the Secretary considers, among other things: whether a grantee has made substantial progress in achieving the goals and objectives of the project; whether the grantee has expended funds in a manner that is consistent with its approved application and budget; and, if the Secretary has established performance measurement requirements, the performance targets in the grantee's approved application.

In making a continuation award, the Secretary also considers whether the grantee is operating in compliance with the assurances in its approved application, including those applicable to Federal civil rights laws that prohibit discrimination in programs or activities receiving Federal financial assistance from the Department (34 CFR 100.4, 104.5, 106.4, 108.8, and 110.23).

VII. Other Information

Accessible Format: Individuals with disabilities can obtain this document and a copy of the application package in an accessible format (*e.g.,* braille, large print, audiotape, or compact disc) on request to the program contact listed under **FOR FURTHER INFORMATION CONTACT.**

Electronic Access to This Document: The official version of this document is the document published in the **Federal Register**. You may access the official edition of the **Federal Register** and the Code of Federal Regulations at *www.govinfo.gov.* At this site you can view this document, as well as all other documents of this Department published in the **Federal Register**, in text or Portable Document Format (PDF). To use PDF you must have Adobe Acrobat Reader, which is available free at the site.

You may also access documents of the Department published in the **Federal Register** by using the article search feature at *www.federalregister.gov.* Specifically, through the advanced search feature at this site, you can limit your search to documents published by the Department.

Frank T. Brogan,

Assistant Secretary for Elementary and Secondary Education.

[FR Doc. 2020–07026 Filed 4–2–20; 8:45 am]

BILLING CODE 4000–01–P

DEPARTMENT OF EDUCATION

[Docket No.: ED–2020–SCC–0017]

Agency Information Collection Activities; Submission to the Office of Management and Budget for Review and approval; Comment Request; William D. Ford Federal Direct Loan Program—150% Limitation

AGENCY: Federal Student Aid (FSA), Department of Education (ED).

ACTION: Notice.

SUMMARY: In accordance with the Paperwork Reduction Act of 1995, ED is proposing an extension of an existing information collection.

DATES: Interested persons are invited to submit comments on or before May 4, 2020.

ADDRESSES: Written comments and recommendations for proposed information collection requests should be sent within 30 days of publication of this notice to *www.reginfo.gov/public/do/PRAMain.* Find this particular information collection request by selecting ''Department of Education'' under ''Currently Under Review,'' then check ''Only Show ICR for Public Comment'' checkbox.

FOR FURTHER INFORMATION CONTACT: For specific questions related to collection activities, please contact Beth Grebeldinger, 202–377–4018.

SUPPLEMENTARY INFORMATION: The Department of Education (ED), in accordance with the Paperwork Reduction Act of 1995 (PRA) (44 U.S.C. 3506(c)(2)(A)), provides the general public and Federal agencies with an opportunity to comment on proposed, revised, and continuing collections of information. This helps the Department assess the impact of its information collection requirements and minimize the public's reporting burden. It also helps the public understand the Department's information collection requirements and provide the requested data in the desired format. ED is soliciting comments on the proposed information collection request (ICR) that is described below. The Department of Education is especially interested in public comment addressing the following issues: (1) Is this collection necessary to the proper functions of the Department; (2) will this information be processed and used in a timely manner; (3) is the estimate of burden accurate; (4) how might the Department enhance the quality, utility, and clarity of the information to be collected; and (5) how might the Department minimize the burden of this collection on the respondents, including through the use of information technology. Please note that written comments received in response to this notice will be considered public records.

Title of Collection: William D. Ford Federal Direct Loan Program—150% Limitation.

OMB Control Number: 1845–0116

Type of Review: An extension of an existing information collection

Respondents/Affected Public: Individuals or Households; Private Sector; State, Local, and Tribal Governments

Total Estimated Number of Annual Responses: 7,102,732

Total Estimated Number of Annual Burden Hours: 240,824

Abstract: On July 6, 2012, the Moving Ahead for Progress in the 21st Century Act (MAP–21)was signed into law. MAP–21 included two changes to the William D. Ford Federal Direct Loan (Direct Loan) Program. Specifically, MAP–21 amended section 455 of the Higher Education Act of 1965, as amended (HEA) to extend the 3.4 percent fixed interest rate that applies to Direct Subsidized Loans made to undergraduate students to loans for which the first disbursement is made before July 1, 2013. Second, the law placed a limit on Direct Subsidized Loan eligibility for new borrowers on or after July 1, 2013. Specifically, a new borrower on or after July 1, 2013 is no longer eligible to receive additional Direct Subsidized Loans if the period during which the borrower has received such loans exceeds 150 percent of the published length of the borrower's educational program. Additionally, the borrower becomes responsible for accruing interest on any Direct Subsidized Loan made to the borrower on or after July 1, 2013 if he or she is enrolled after reaching this 150 percent limit. The Department of Education (the Department) is requesting an extension of the current information collection.

Dated: March 30, 2020.

Kate Mullan,

PRA Coordinator, Strategic Collections and Clearance Governance and Strategy Division, Office of Chief Data Officer.

[FR Doc. 2020–06950 Filed 4–2–20; 8:45 am]

BILLING CODE 4000–01–P

DEPARTMENT OF EDUCATION

Applications for New Awards; Comprehensive Literacy State Development Program

AGENCY: Office of Elementary and Secondary Education, Department of Education.

ACTION: Notice.

SUMMARY: The Department of Education (Department) is issuing a notice inviting applications for new awards for fiscal year (FY) 2020 for the Comprehensive Literacy State Development (CLSD) program, Catalog of Federal Domestic Assistance (CFDA) number 84.371C. This notice relates to the approved information collection under OMB control number 1894–0006.

DATES:

Applications Available: April 3, 2020.

Deadline for Transmittal of Applications: June 2, 2020.

Deadline for Intergovernmental Review: August 3, 2020.

ADDRESSES: For the addresses for obtaining and submitting an application, please refer to our Common Instructions for Applicants to Department of Education Discretionary Grant Programs, published in the **Federal Register** on February 13, 2019 (84 FR 3768), and available at *www.govinfo.gov/content/pkg/FR-2019-02-13/pdf/2019-02206.pdf.*

FOR FURTHER INFORMATION CONTACT: Cindy Savage, U.S. Department of Education, 400 Maryland Avenue SW, Room 3E243, Washington, DC 20202–6450. Telephone: (202) 453–5998. Email: *cindy.savage@ed.gov;* or Jennifer Brianas, U.S. Department of Education, 400 Maryland Avenue SW, Room 3E239, Washington, DC 20202–6450. Telephone: (202) 401–0299. Email: *jennifer.brianas@ed.gov.*

If you use a telecommunications device for the deaf (TDD) or a text telephone (TTY), call the Federal Relay Service (FRS), toll free, at 1–800–877–8339.

SUPPLEMENTARY INFORMATION:

Full Text of Announcement

I. Funding Opportunity Description

Purpose of Program: The CLSD program awards competitive grants to advance literacy skills, through the use of evidence-based (as defined in this notice) practices, activities, and interventions, including pre-literacy skills, reading, and writing, for children from birth through grade 12, with an emphasis on disadvantaged children, including children living in poverty, English learners (as defined in this notice), and children with disabilities (as defined in this notice).

Background: The FY 2020 competition for new CLSD awards focuses on the requirements in the statute. In addition, we have included three competitive preference priorities that highlight key policies for States on which to focus their literacy plans or encourage eligible subgrant applicants to focus their local literacy plans.

First, we give competitive preference to applications from new potential grantees to diversify the applicant pool and even the playing field for applicants with varying levels of experience. For the purpose of this priority, we give preference to grantees that have not had an active grant in the past five years under the CLSD program, or the Striving Readers Comprehensive Literacy Program (SRCL), as the CLSD program was called prior to the passage of the Every Student Succeeds Act (*i.e.,* applicants that did not have an active grant under SRCL or CLSD as of five years before the deadline date for submission of applications under the program).

Second, we give competitive preference to applications that would

focus their subgrant competitions on projects located in Qualified Opportunity Zones (QOZs). Public law 115–97 authorized the designation of QOZs to promote economic development and job creation in distressed communities through preferential tax treatment for investors. A list of QOZs is available at *www.cdfifund.gov/Pages/Opportunity-Zones.aspx;* applicants may also determine whether a particular area overlaps with a QOZ using the National Center of Education Statistics' map located at *https://nces.ed.gov/programs/maped/LocaleLookup/.* To receive competitive preference points under this priority, applicants must provide the Department with the census tract number of the QOZs they plan to serve and describe the services they will provide. For the purposes of CLSD subgrant competitions, State educational agencies (SEAs) should consider the area where the eligible entity (as defined in this notice) is located to be the area that must overlap with a QOZ; an eligible entity with multiple sites (*e.g.,* a local educational agency (LEA) with multiple schools) may be considered to overlap with a QOZ even if only one site is located in a QOZ. We believe that this priority aligns with the purpose of the CLSD program to advance literacy skills for disadvantaged children, including children living in poverty, English learners, and children with disabilities.

Third, we give competitive preference to applications that propose projects designed to focus on improving student outcomes that provide increased value to students and taxpayers. Within this competitive preference priority, we are particularly interested in applications that propose to leverage resources to reduce redundancy and increase efficiency in developing literacy programs and activities. Leveraging resources is the process of identifying the benefits from an investment or project using available resources to recognize additional resources. The process may result in a total effect that is greater than the sum of the parts. It involves the removal of barriers that prevent or hinder the flow of goods, services, and funds to meet program goals. State and local plans focused on identifying opportunities to streamline or eliminate redundancies or unnecessary requirements or capitalize on already available Federal, State, and local resources, may ultimately allow subgrantees to focus more closely on approaches that improve outcomes for students and their families.

In addition, section 2222(d) of the Elementary and Secondary Education Act of 1965, as amended (ESEA), requires that an applicant describe how it will develop a State comprehensive literacy instruction plan, and applicants are encouraged to align these plans with their State plans under ESEA. An important component of a comprehensive literacy plan includes innovative strategies to improve access to high-quality preschool through grade 12 opportunities that take place outside of the traditional public school setting. In developing these plans, applicants may provide parents and students a choice of opportunities that may include, for example, online literacy programs, industry-focused literacy programs, expanded library hours, community partnerships, and other literacy programs or projects that allow parents and students to access literacy software and information at any time and any place.

Consistent with section 2222(e) of the ESEA, the Secretary gives priority to SEAs that will use the grant funds for evidence-based activities and includes a selection criterion under Quality of Project Design that awards points to applicants to the extent that SEAs propose to use CLSD funds for evidence-based activities. Applicants should use CLSD funds for activities supported by the highest evidence available, and in cases where there may not be significant evidence-based literacy strategies or interventions available, for example in early childhood education, we encourage applicants to demonstrate a rationale (*i.e.,* the need for the intervention, its inputs and outputs, and the intended outcomes) for how the intervention will help to achieve the project outcomes. For this competition, SEAs are required to prioritize kindergarten through grade 12 subgrant applications that meet the higher evidence levels of strong or moderate evidence included in the definition of ''evidence-based'' in this notice.

Priorities: This competition includes three competitive preference priorities. Priority 1 is from the Department's Administrative Priorities for Discretionary Grant Programs published in the **Federal Register** on March 9, 2020 (85 FR 13640) (Administrative Priorities); Priority 2 is from the Department's notice of final priority for Discretionary Grant Programs published in the **Federal Register** on November 27, 2019 (84 FR 65300) (Opportunity Zones NFP); and Priority 3 is from the Secretary's Final Supplemental Priorities and Definitions for Discretionary Grant Programs published in the **Federal Register** on March 2, 2018 (83 FR 9096) (Supplemental Priorities).

Competitive Preference Priorities: For FY 2020 and any subsequent year in which we make awards from the list of unfunded applications from this competition, these priorities are competitive preference priorities. Applicants may apply under any, all, or none of the competitive preference priorities. Under 34 CFR 75.105(c)(2)(i), we award an additional 10 points to an application that meets Priority 1; an additional five points to an application that meets Priority 2; and up to an additional three points to an application that addresses Priority 3, depending on how well the application addresses Priority 3. An application may be awarded up to a maximum of 18 additional points. These points are in addition to any points the application earns under the selection criteria in this notice.

These priorities are:

Priority 1—Applications from New Potential Grantees (0 or 10 points).

(a) Under this priority, an applicant must demonstrate that the applicant has not had an active discretionary grant under the program from which it seeks funds, including through membership in a group application submitted in accordance with 34 CFR 75.127–75.129, in the five years before the deadline date for submission of applications under the program.

(b) For the purpose of this priority, a grant or contract is active until the end of the grant's or contract's project or funding period, including any extensions of those periods that extend the grantee's or contractor's authority to obligate funds.

Note: For purposes of this priority, ''the program'' includes both the SRCL and CLSD programs because they are substantially the same.

Priority 2—Spurring Investment in Qualified Opportunity Zones (0 or 5 points).

Under this priority, an applicant must demonstrate that the area in which the applicant proposes to provide services overlaps with a QOZ as designated by the Secretary of the Treasury under section 1400z–1 of the Internal Revenue Code (IRC). An applicant must—

(a) Provide the census tract number of the QOZ(s) in which it proposes to provide services; and

(b) Describe how the applicant will provide services in the QOZ(s).

Note: In responding to this priority, an applicant is encouraged to explain how it will encourage prospective subgrantees to leverage opportunities in QOZs to address the State application

and program requirements in this notice.

Priority 3—Promoting Innovation and Efficiency, Streamlining Education with an Increased Focus on Improving Student Outcomes and Providing Increased Value to Students and Taxpayers (up to 3 points).

Projects that are designed to address one or both of the following priority areas:

(a) Implementing strategies that ensure education funds are spent in a way that increases their efficiency and cost-effectiveness, including by reducing waste or achieving better outcomes.

(b) Supporting innovative strategies or research that have the potential to lead to significant and wide-reaching improvements in the delivery of educational services or other significant and tangible educational benefits to students, educators, or other Department stakeholders.

Within this competitive preference priority, we are particularly interested in applications that address the following invitational priority.

Invitational Priority: Under 34 CFR 75.105(c)(1), we do not give an application that meets this invitational priority a competitive or absolute preference over other applications.

This priority is:

Promoting Innovation and Efficiency, and Streamlining Education by Leveraging Education Resources.

Projects that are designed to implement strategies that leverage Federal, State, and local resources (*e.g.,* funding, processes, infrastructure, people) to reduce redundancy and to increase efficiency to develop literacy programs and activities.

Application Requirements: For FY 2020, and any subsequent year in which we make awards from the list of unfunded applications from this competition, applicants must submit an application that meets the following application requirements from section 2222 of the ESEA (20 U.S.C. 6642).

(a) *State Agency Early Childhood Program Collaboration.*

An SEA must collaborate with the State agency responsible for administering early childhood education programs and the State agency responsible for administering child care programs in the State, in writing and implementing the early childhood education portion of the grant application submitted for the CLSD program.

(b) *State Needs Assessment.*

An SEA must include a needs assessment that analyzes literacy needs across the State and in high-need schools (as defined in this notice) and LEAs that serve high-need schools, including identifying the most significant gaps in literacy proficiency and inequities in student access to effective teachers of literacy, considering each of the subgroups of students, as defined in section 1111(c)(2) of the ESEA.

(c) *State Comprehensive Literacy Plan.*

An SEA must include a description of how, in collaboration with its State literacy team, if applicable, it will develop a State comprehensive literacy instruction (as defined in this notice) plan or will revise and update an already existing State comprehensive literacy instruction plan.

(d) *State Implementation Plan.*

An SEA must include an implementation plan that includes a description of how it will carry out the State activities detailed in section 2222(f) of the ESEA.

(e) *Assurances.*

An SEA must include in its application the following assurances:

(1) *State Funding Allocations.*

(a) An SEA must assure that it will subgrant not less than 95 percent of grant funds to eligible entities (as defined in this notice), based on their needs assessment and a competitive application process, for comprehensive literacy instruction programs according to the funding allocations in Program Requirement (a).

(b) An SEA must assure it will use grant funds described in section 2222(f)(1) for comprehensive literacy instruction programs as follows:

(i) Not less than 15 percent of such grant funds must be used for State and local programs and activities pertaining to children from birth through kindergarten entry.

(ii) Not less than 40 percent of such grant funds must be used for State and local programs and activities, allocated equitably among the grades of kindergarten through grade 5.

(iii) Not less than 40 percent of such grant funds must be used for State and local programs and activities, allocated equitably among grades 6 through 12.

(2) *Serving Low-Income and High-Need Students.*

An SEA must assure that it will give priority in awarding subgrants to eligible entities that—

(i) Serve children from birth through age 5 who are from families with income levels at or below 200 percent of the Federal poverty line (as defined in this notice); or

(ii) Are LEAs serving a high number or percentage of high-need schools.

(3) *Geographic Diversity.*

An SEA must assure that it will provide subgrants to eligible entities serving a diversity of geographic areas, giving priority to entities serving greater numbers or percentages of children from low-income families.

Program Requirements: For FY 2020 and any subsequent year in which we make awards from the list of unfunded applications from this competition, the following program requirements apply. These program requirements are from sections 2222–2225 and 2301 of the ESEA.

(a) *State Funding Allocations.*

(1) Grantees must use not less than 95 percent of grant funds to award subgrants to eligible entities, based on their needs assessment and a competitive application process;

(2) Grantees must subgrant funds as follows:

(i) Not less than 15 percent of the funds awarded to subgrantees must be used for State and local programs and activities pertaining to children from birth through kindergarten entry;

(ii) Not less than 40 percent of the funds awarded to subgrantees must be used for State and local programs and activities, allocated equitably among the grades of kindergarten through grade 5; and

(iii) Not less than 40 percent of the funds awarded to subgrantees must be used for State and local programs and activities, allocated equitably among grades 6 through 12.

(b) *State-Level Activities.*

(1) A grantee may reserve not more than 5 percent of the CLSD funds it receives for activities identified through the needs assessment and comprehensive literacy plan, including, at a minimum, the following activities:

(i) Providing technical assistance, or engaging qualified providers to provide technical assistance, to eligible entities to enable the eligible entities to design and implement literacy programs.

(ii) Coordinating with institutions of higher education in the State to provide recommendations to strengthen and enhance pre-service courses for students preparing to teach children from birth through grade 12 in explicit, systematic, and intensive instruction in evidence-based literacy methods.

(iii) Reviewing and updating, in collaboration with teachers and institutions of higher education, State licensure or certification standards in the area of literacy instruction in early education through grade 12.

(iv) Making publicly available, including on the SEA's website, information on promising instructional practices to improve child literacy achievement.

(v) Administering and monitoring the implementation of subgrants by eligible entities.

(2) After making awards to subgrantees and carrying out the State-level activities described in this notice, an SEA may use any remaining amount to carry out one or more of the following activities:

(i) Developing literacy coach training programs and training literacy coaches.

(ii) Administration and evaluation of CLSD activities.

(3) *Collaboration requirement.*

A grantee must collaborate with the State agency responsible for administering early childhood education programs, the State agency responsible for administering child care programs, and, if applicable, the State Advisory Council on Early Childhood Education and Care designated or established pursuant to section 642(b(1)(A)(i) of the Head Start Act, in making and implementing subgrants under the early childhood education portion of the CLSD program, described in section 2222(d)(2)(D)(i).

Note: Section 2222(d)(1) of the ESEA specifically references child care and early childhood programs within a State. Since the CLSD service population encompasses children from birth and includes pre-literacy services, applicants may collaborate with the State agencies administering the Part C program for infants and toddlers under the Individuals with Disabilities Education Act in their program planning, as some children being served under Part C would likely benefit from CLSD services.

(c) *Requirements that apply to subgrants to eligible entities in support of birth through kindergarten entry literacy.*

(1) *Subgrantee application requirements.*

An eligible entity desiring to receive a subgrant under CLSD must submit an application to the SEA, at such time, in such manner, and containing such information as the SEA may require. Such application must include a description of—

(i) How the CLSD funds will be used to enhance the language and literacy development and school readiness of children, from birth through kindergarten entry, in early childhood education programs, which must include an analysis of data that support the proposed use of CLSD funds;

(ii) How the CLSD funds will be used to prepare and provide ongoing assistance to staff in the programs, including through high-quality professional development (as defined in this notice);

(iii) How the activities assisted with the CLSD funds will be coordinated with comprehensive literacy instruction at the kindergarten through grade 12 levels; and

(iv) How the CLSD funds will be used to evaluate the success of the activities assisted under the subgrant in enhancing the early language and literacy development of children from birth through kindergarten entry.

(2) *Priority.*

In awarding subgrants to eligible entities in support of birth through kindergarten entry, sections 2222(d)(2)(E) and 2223(c) of the ESEA require that an SEA must provide an assurance that it will—

(i) Give priority to an eligible entity that will use CLSD funds to implement evidence-based activities;

(ii) Give priority to an eligible entity that will use CLSD funds to serve children from birth through age 5 who are from families with income levels at or below 200 percent of the Federal poverty line or is an LEA serving a high number or percentage of high-need schools; and

(iii) Give priority to an eligible entity that will use CLSD funds to serve children from birth through age 5 in a diversity of geographic areas.

(3) *Duration.*

The term of a subgrant must be determined by the grantee and must not exceed five years.

(4) *Sufficient size and scope.*

Each subgrant must be of sufficient size and scope to allow the eligible entity to carry out high-quality early literacy initiatives for children from birth through kindergarten entry.

(5) *Local uses of funds.*

An eligible entity that receives a subgrant from the SEA must use the CLSD funds, consistent with the entity's approved application, to—

(i) Carry out high-quality professional development opportunities for early childhood educators, teachers, principals, other school leaders (as defined in this notice), paraprofessionals, specialized instructional support personnel, and instructional leaders;

(ii) Train providers and personnel to develop and administer evidence-based early childhood education literacy initiatives; and

(iii) Coordinate the involvement of families, early childhood education program staff, principals, other school leaders, specialized instructional support personnel (as appropriate), and teachers in literacy development of children served under CLSD.

(d) *Requirements that apply to subgrants to eligible entities in support of kindergarten through grade 12 literacy.*

(1) *Subgrantee application requirements.*

An eligible entity desiring to receive a subgrant from the SEA under the CLSD program must submit an application to the SEA at such time, in such manner, and containing such information as the SEA may require. Such application must include, for each school that the eligible entity identifies as participating in a CLSD program, the following information:

(i) A description of the eligible entity's needs assessment conducted to identify how CLSD funds will be used to inform and improve comprehensive literacy instruction at the school.

(ii) How the school, the LEA, or a provider of high-quality professional development will provide ongoing high-quality professional development to all teachers, principals, other school leaders, specialized instructional support personnel (as appropriate), and other instructional leaders served by the school.

(iii) How the school will identify children in need of literacy interventions or other support services.

(iv) An explanation of how the school will integrate comprehensive literacy instruction into a well-rounded education (as defined in this notice).

(v) A description of how the school will coordinate comprehensive literacy instruction with early childhood education programs and activities and after-school programs and activities in the area served by the LEA.

(2) *Priority.*

In awarding subgrants to eligible entities the SEA must give priority to an eligible entity that will—

(i) Use grant funds to implement evidence-based activities, which meet the requirements of strong or moderate evidence in the definition of ''evidence-based'' in this notice; and

(ii) Give priority to an eligible entity that will use CLSD funds to serve children from kindergarten through grade 12 in a diversity of geographic areas.

(3) *Duration.*

The term of a subgrant must be determined by the grantee and must not exceed five years.

(4) *Sufficient size and scope.*

Each subgrant must be of sufficient size and scope to allow the eligible entity to carry out high-quality comprehensive literacy instruction in each grade level for which the CLSD funds are provided.

(5) *Local uses of funds for kindergarten through grade 5.*

An eligible entity that receives a subgrant from the SEA under the CLSD

program must use the CLSD funds to carry out the following activities pertaining to children in kindergarten through grade 5:

(i) Developing and implementing a comprehensive literacy instruction plan across content areas for such children that—

(A) Serves the needs of all children, including children with disabilities and English learners, especially children who are reading or writing below grade level;

(B) Provides intensive, supplemental, accelerated, and explicit intervention and support in reading and writing for children whose literacy skills are below grade level; and

(C) Supports activities that are provided primarily during the regular school day but that may be augmented by after-school and out-of-school time instruction.

(ii) Providing high-quality professional development opportunities for teachers, literacy coaches, literacy specialists, English as a second language specialists (as appropriate), principals, other school leaders, specialized instructional support personnel, school librarians, paraprofessionals, and other program staff.

(iii) Training principals, specialized instructional support personnel, and other LEA personnel to support, develop, administer, and evaluate high-quality kindergarten through grade 5 literacy initiatives.

(iv) Coordinating the involvement of early childhood education program staff, principals, other instructional leaders, teachers, teacher literacy teams, English as a second language specialists (as appropriate), special educators, school personnel, and specialized instructional support personnel (as appropriate) in the literacy development of children served.

(v) Engaging families and encouraging family literacy experiences and practices to support literacy development.

(6) *Local uses of funds for grades 6 through 12.*

An eligible entity that receives a subgrant from the SEA under CLSD must use CLSD funds to carry out the following activities pertaining to children in grades 6 through 12:

(i) Developing and implementing a comprehensive literacy instruction plan across content areas for such children that—

(A) Serves the needs of all children, including children with disabilities and English learners, especially children who are reading or writing below grade level;

(B) Provides intensive, supplemental, accelerated, and explicit intervention and support in reading and writing for children whose literacy skills are below grade level; and

(C) Supports activities that are provided primarily during the regular school day but that may be augmented by after-school and out-of-school time instruction.

(ii) Training principals, specialized instructional support personnel, school librarians, and other LEA personnel to support, develop, administer, and evaluate high-quality comprehensive literacy instruction initiatives for grades 6 through 12.

(iii) Assessing the quality of adolescent comprehensive literacy instruction as part of a well-rounded education.

(iv) Providing time for teachers to meet to plan evidence-based adolescent comprehensive literacy instruction to be delivered as part of a well-rounded education.

(v) Coordinating the involvement of principals, other instructional leaders, teachers, teacher literacy teams, English as a second language specialists (as appropriate), paraprofessionals, special educators, specialized instructional support personnel (as appropriate), and school personnel in the literacy development of children served.

(7) *Additional local allowable uses of funds for kindergarten through grade 12.*

An eligible entity that receives a subgrant from an SEA under CLSD may, in addition to carrying out the activities described in paragraphs 5 and 6 of this requirement, use subgrant funds to carry out the following activities pertaining to children in kindergarten through grade 12:

(i) Recruiting, placing, training, and compensating literacy coaches.

(ii) Connecting out-of-school learning opportunities to in-school learning in order to improve children's literacy achievement.

(iii) Training families and caregivers to support the improvement of adolescent literacy.

(iv) Providing for a multi-tier system of supports for literacy services.

(v) Forming a school literacy leadership team to help implement, assess, and identify necessary changes to the literacy initiatives in 1 or more schools to ensure success.

(vi) Providing time for teachers (and other literacy staff, as appropriate, such as school librarians or specialized instructional support personnel) to meet to plan comprehensive literacy instruction.

(e) *Supplement not supplant.*

Grantees must use CLSD funds to supplement, and not supplant, non-Federal funds that would otherwise be used for activities authorized under the CLSD program.

(f) *Cooperation with national evaluation.*

Grantees must cooperate with a national evaluation of the CLSD program (34 CFR 75.591). The evaluation will include high-quality research that applies rigorous and systematic procedures to obtain valid knowledge relevant to the implementation and effect of the CLSD program. The evaluation will directly coordinate with individual State evaluations of the CLSD program implementation.

Definitions: The definitions of ''Comprehensive literacy instruction,'' ''Eligible entity,'' and ''High-need school'' are from section 2221 of the ESEA. The definitions of ''Child with a disability,'' ''English learner,'' ''Evidence-based,'' ''Poverty line,'' ''Professional development,'' ''School leader,'' and ''Well-rounded education'' are from section 8101 of the ESEA.

Child with a disability has the meaning given to the term in section 602 of the Individuals with Disabilities Education Act.

Comprehensive literacy instruction means instruction that-–

(a) Includes developmentally appropriate, contextually explicit, and systematic instruction, and frequent practice, in reading and writing across content areas;

(b) Includes age-appropriate, explicit, systematic and intentional instruction in phonological awareness, phonic decoding, vocabulary, language structure, reading fluency, and reading comprehension;

(c) Includes age-appropriate, explicit instruction in writing, including opportunities for children to write with clear purposes, with critical reasoning appropriate to the topic and purpose, and with specific instruction and feedback from instructional staff;

(d) Makes available and uses diverse, high-quality print materials that reflect the reading and development levels, and interests, of children;

(e) Uses differentiated instructional approaches,

including individual and small group instruction and discussion;

(f) Provides opportunities for children to use language with peers and adults in order to develop language skills, including developing vocabulary;

(g) Includes frequent practice of reading and writing strategies;

(h) Uses age-appropriate, valid, and reliable screening assessments,

diagnostic assessments, formative assessment processes, and summative assessments to identify a child's learning needs, to inform instruction, and to monitor the child's progress and the effects of instruction;

(i) Uses strategies to enhance children's motivation to read and write and children's engagement in self-directed learning;

(j) Incorporates the principles of universal design for learning;

(k) Depends on teachers' collaboration in planning, instruction, and assessing a child's progress and on continuous professional learning; and

(l) Links literacy instruction to the challenging State academic standards, including the ability to navigate, understand, and write about, complex print and digital subject matter.

Eligible entity means an entity that consists of-–

(a) One or more LEAs that serve a high percentage of high-need schools and—

(1) Have the highest number or proportion of children who are counted under section 1124(c) of the ESEA, in comparison to other LEAs in the State;

(2) Are among the LEAs in the State with the highest number or percentages of children reading or writing below grade level, based on the most currently available State academic assessment data under section 1111(b)(2) of the ESEA; or

(3) Serve a significant number or percentage of schools that are implementing comprehensive support and improvement activities and targeted support and improvement activities under section 1111(d) of the ESEA;

(b) One or more early childhood education programs serving low-income or otherwise disadvantaged children, which may include home-based literacy programs for pre-school-aged children, that have a demonstrated record of providing comprehensive literacy instruction for the age group such program proposes to serve; or

(c) An LEA, described in paragraph (a), or consortium of such LEAs, or an early childhood education program, which may include home-based literacy programs for preschool-aged children, acting in partnership with one or more public or private nonprofit organizations or agencies (which may include early childhood education programs) that have a demonstrated record of effectiveness in—

(1) Improving literacy achievement of children, consistent with the purposes of participation under the CLSD program, from birth through grade 12; and

(2) Providing professional development in comprehensive literacy instruction.

English learner means an individual—

(a) Who is aged 3 through 21;

(b) Who is enrolled or preparing to enroll in an elementary school or secondary school;

(c)(i) Who was not born in the United States or whose native language is a language other than English;

(ii)(I) Who is a Native American or Alaska Native, or a native resident of the outlying areas; and

(II) Who comes from an environment where a language other than English has had a significant impact on the individual's level of English language proficiency; or

(iii) Who is migratory, whose native language is a language other than English, and who comes from an environment where a language other than English is dominant; and

(d) Whose difficulties in speaking, reading, writing, or understanding the English language may be sufficient to deny the individual—

(i) The ability to meet the challenging State academic standards;

(ii) The ability to successfully achieve in classrooms where the language of instruction is English; or

(iii) The opportunity to participate fully in society.

Evidence-based, when used with respect to a State, LEA, or school activity, means an activity, strategy, or intervention that demonstrates a statistically significant effect on improving student outcomes or other relevant outcomes based on—

(a) Strong evidence from at least one-well designed and well-implemented experimental study;

(b) Moderate evidence from at least one well-designed and well-implemented quasi-experimental study; or

(c) Promising evidence from at least one well-designed and well-implemented correlational study with statistical controls for selection bias.

High-need school means—

(a)(i) An elementary school or middle school in which not less than 50 percent of the enrolled students are children from low-income families; or

(ii) A high school in which not less than 40 percent of the enrolled students are children from low-income families, which may be calculated using comparable data from the schools that feed into the high school.

(b) For the purposes of paragraph (a) of this definition, the term ''low-income family'' means a family-–

(i) In which the children are eligible for a free or reduced-price lunch under the Richard B. Russell National School Lunch Act (42 U.S.C. 1751 *et seq.*);

(ii) Receiving assistance under the program of block grants to States for temporary assistance for needy families established under part A of title IV of the Social Security Act (42 U.S.C. 601 *et seq.*); or

(iii) In which the children are eligible to receive medical assistance under the Medicaid program under title XIX of the Social Security Act (42 U.S.C. 1396 *et seq.*).

Poverty line means the poverty line (as defined by the Office of Management and Budget and revised annually in accordance with section 673(2) of the Community Services Block Grant Act) applicable to a family of the size involved.

Professional development means activities that—

(a) Are an integral part of school and LEA strategies for providing educators (including teachers, principals, other school leaders, specialized instructional support personnel, paraprofessionals, and, as applicable, early childhood educators) with the knowledge and skills necessary to enable students to succeed in a well-rounded education and to meet the challenging State academic standards; and

(b) Are sustained (not stand-alone, one-day, or short-term workshops), intensive, collaborative, job-embedded, data-driven, and classroom-focused, and may include activities that—

(1) Improve and increase teachers'—

(i) Knowledge of the academic subjects the teachers teach;

(ii) Understanding of how students learn; and

(iii) Ability to analyze student work and achievement from multiple sources, including how to adjust instructional strategies, assessments, and materials based on such analysis;

(2) Are an integral part of broad schoolwide and districtwide educational improvement plans;

(3) Allow personalized plans for each educator to address the educator's specific needs identified in observation or other feedback;

(4) Improve classroom management skills;

(5) Support the recruitment, hiring, and training of effective teachers, including teachers who became certified through State and local alternative routes to certification;

(6) Advance teacher understanding of—

(i) Effective instructional strategies that are evidence-based; and

(ii) Strategies for improving student academic achievement or substantially increasing the knowledge and teaching skills of teachers;

(7) Are aligned with, and directly related to, academic goals of the school or LEA;

(8) Are developed with extensive participation of teachers, principals, other school leaders, parents, representatives of Indian tribes (as applicable), and administrators of schools to be served under this program;

(9) Are designed to give teachers of English learners, and other teachers and instructional staff, the knowledge and skills to provide instruction and appropriate language and academic support services to those children, including the appropriate use of curricula and assessments;

(10) To the extent appropriate, provide training for teachers, principals, and other school and community-based early childhood program leaders in the use of technology (including education about the harms of copyright piracy), so that technology and technology applications are effectively used in the classroom to improve teaching and learning in the curricula and academic subjects in which the teachers teach;

(11) As a whole, are regularly evaluated for their impact on teacher effectiveness and student academic achievement, with the findings of the evaluations used to improve the quality of professional development;

(12) Are designed to give teachers of children with disabilities or children with developmental delays, and other teachers and instructional staff, the knowledge and skills to provide instruction and academic support services to those children, including positive behavioral interventions and supports, multi-tier system of supports, and use of accommodations;

(13) Include instruction in the use of data and assessments to inform classroom practice;

(14) Include instruction in ways that teachers, principals, other school leaders, specialized instructional support personnel, and school administrators may work more effectively with parents and families;

(15) Involve the forming of partnerships with institutions of higher education, including, as applicable, Tribal Colleges and Universities as defined in section 316(b) of the Higher Education Act of 1965, as amended (HEA) (20 U.S.C. 1059c(b)), to establish school-based teacher, principal, and other school leader training programs that provide prospective teachers, novice teachers, principals, and other school leaders with an opportunity to work under the guidance of experienced teachers, principals, other school leaders, and faculty of such institutions;

(16) Create programs to enable paraprofessionals (assisting teachers employed by an LEA receiving assistance under part A of title I of the ESEA) to obtain the education necessary for those paraprofessionals to become certified and licensed teachers;

(17) Provide follow-up training to teachers who have participated in activities described in this paragraph that are designed to ensure that the knowledge and skills learned by the teachers are implemented in the classroom; and

(18) Where practicable, provide jointly for school staff and other early childhood education program providers, to address the transition to elementary school, including issues related to school readiness.

School leader means a principal, assistant principal, or other individual who is—

(a) An employee or officer of an elementary school or secondary school, LEA, or other entity operating an elementary school or secondary school; and

(b) Responsible for the daily instructional leadership and managerial operations in the elementary school or secondary school building.

Well-rounded education means courses, activities, and programming in subjects such as English, reading or language arts, writing, science, technology, engineering, mathematics, foreign languages, civics and government, economics, arts, history, geography, computer science, music, career and technical education, health, physical education, and any other subject, as determined by the State or LEA, with the purpose of providing all students access to an enriched curriculum and educational experience.

Program Authority: Sections 2221–2225 of the ESEA.

Applicable Regulations: (a) The Education Department General Administrative Regulations in 34 CFR parts 75, 77, 79, 81, 82, 84, 86, 97, 98, and 99. (b) The Office of Management and Budget Guidelines to Agencies on Governmentwide Debarment and Suspension (Nonprocurement) in 2 CFR part 180, as adopted and amended as regulations of the Department in 2 CFR part 3485. (c) The Uniform Administrative Requirements, Cost Principles, and Audit Requirements for Federal Awards in 2 CFR part 200, as adopted and amended as regulations of the Department in 2 CFR part 3474. (d) The Supplemental Priorities. (e) The Administrative Priorities. (f) The Opportunity Zones NFP.

II. Award Information

Type of Award: Discretionary grants.

Estimated Available Funds: $84,415,248.

Contingent upon the availability of funds and the quality of applications, we may make additional awards in subsequent years from the list of unfunded applications from this competition.

Estimated Range of Awards: $11,000,000 to $21,000,000.

Estimated Average Size of Awards: $16,000,000.

Estimated Number of Awards: 4–8.

Note: The Department is not bound by any estimates in this notice.

Project Period: 60 months. The Secretary may renew a grant for an additional two-year period upon the termination of the initial grant period if the grant recipient demonstrates to the satisfaction of the Secretary that: (1) The State has made adequate progress; and (2) renewing the grant for an additional two-year period is necessary to carry out the objectives of the grant detailed in section 2222(d) of the ESEA.

III. Eligibility Information

1. *Eligible Applicants:* SEAs of the 50 States, the District of Columbia, and Puerto Rico (referred to in this notice as State).

2. a. *Cost Sharing or Matching:* This program does not require cost sharing or matching.

b. *Supplement-Not-Supplant:* This program involves supplement-not-supplant funding requirements. In accordance with section 2301 of the ESEA, CLSD funds must be used to supplement, and not supplant, non-Federal funds that would otherwise be used for activities authorized under the CLSD program. Further, the prohibition against supplanting also means that grantees will be required to use their restricted indirect cost rates under this program (34 CFR 75.563).

3. *Subgrantees:* Under 34 CFR 75.708(b) and (c), a grantee under this competition may award subgrants—to directly carry out project activities described in its application—to eligible entities.

The grantee must award subgrants to entities it selects through a competition under procedures established by the grantee and consistent with sections 2222–2224 of the ESEA.

IV. Application and Submission Information

1. *Application Submission Instructions:* For information and requirements on how to submit an application please refer to our Common

Instructions for Applicants to Department of Education Discretionary Grant Programs, published in the **Federal Register** on February 13, 2019 (84 FR 3768) and available at *www.govinfo.gov/content/pkg/FR-2019-02-13/pdf/2019-02206.pdf,* which contain requirements and information on how to submit an application.

2. *Submission of Proprietary Information:* Given the types of projects that may be proposed in applications for the CLSD program, an application may include business information that the applicant considers proprietary. In 34 CFR 5.11, we define ''business information'' and describe the process we use in determining whether any of that information is proprietary and, thus, protected from disclosure under Exemption 4 of the Freedom of Information Act (5 U.S.C. 552, as amended).

Because we plan to make successful applications available to the public, you may wish to request confidentiality of business information.

Consistent with Executive Order 12600, please designate in your application any information that you believe is exempt from disclosure under Exemption 4. In the appropriate Appendix section of your application, under ''Other Attachments Form,'' please list the page number or numbers on which we can find this information. For additional information please see 34 CFR 5.11(c).

3. *Intergovernmental Review:* This program is subject to Executive Order 12372 and the regulations in 34 CFR part 79. Information about Intergovernmental Review of Federal Programs under Executive Order 12372 is in the application package for this competition.

4. *Funding Restrictions:* We reference regulations outlining funding restrictions in the *Applicable Regulations* section of this notice.

5. *Recommended Page Limit:* The application narrative is where you, the applicant, address the selection criteria that reviewers use to evaluate your application. We recommend that you (1) limit the application narrative to no more than 30 pages and (2) use the following standards:

- A ''page'' is 8.5″ x 11″, on one side only, with 1″ margins at the top, bottom, and both sides.
- Double space (no more than three lines per vertical inch) all text in the application narrative, including titles, headings, footnotes, quotations, references, and captions, as well as all text in charts, tables, figures and graphs.
- Use a font that is either 12 point or larger or no smaller than 10 pitch (characters per inch).
- Use one of the following fonts: Times New Roman, Courier, Courier New, or Arial.

The recommended page limit does not apply to the cover sheet; the budget section, including the narrative budget justification; the assurances and certifications; or the one-page abstract, resumes, bibliography, or letters of support. However, the recommended page limit does apply to all of the application narrative section.

V. Application Review Information

1. *Selection Criteria:* Selection criterion (b)(3) under Quality of Project Design is from section 2222(e) of the ESEA. The remaining selection criteria for this competition are from 34 CFR 75.210. The maximum score for all selection criteria is 100. The maximum possible score for each selection criterion is indicated in parentheses. The selection criteria for this competition are as follows:

(a) *Need for project* (15 points).

The Secretary considers the need for the proposed project. In determining the need for the proposed project, the Secretary considers the extent to which specific gaps or weaknesses in services, infrastructure, or opportunities have been identified and will be addressed by the proposed project, including the nature and magnitude of those gaps or weaknesses.

(b) *Quality of the project design* (25 points).

The Secretary considers the quality of the design of the proposed project. In determining the quality of the design of the proposed project, the Secretary considers the following factors:

(1) The extent to which the goals, objectives, and outcomes to be achieved by the proposed project are clearly specified and measurable.

(2) The extent to which the design of the proposed project includes a thorough, high-quality review of the relevant literature, a high-quality plan for project implementation, and the use of appropriate methodological tools to ensure successful achievement of project objectives.

(3) The extent to which the proposed project will use grant funds for evidence-based activities.

(c) *Quality of the management plan* (25 points).

The Secretary considers the quality of the management plan for the proposed project. In determining the quality of the management plan for the proposed project, the Secretary considers:

(1) The adequacy of the management plan to achieve the objectives of the proposed project on time and within budget, including clearly defined responsibilities, timelines, and milestones for accomplishing project tasks.

(2) The adequacy of procedures for ensuring feedback and continuous improvement in the operation of the proposed project.

(d) *Quality of project services* (35 points).

The Secretary considers the quality of the project services to be provided by the proposed project. In determining the quality of project services to be provided by the proposed project, the Secretary considers the quality and sufficiency of strategies for ensuring equal access and treatment for eligible project participants who are members of groups that have traditionally been underrepresented based on race, color, national origin, gender, age, or disability. In addition, the Secretary considers:

(1) The likely impact of the services to be provided by the proposed project on the intended recipients of those services; and

(2) The extent to which the training or professional development services to be provided by the proposed project are of sufficient quality, intensity, and duration to lead to improvements in practice among the recipients of those services.

2. *Review and Selection Process:* We remind potential applicants that in reviewing applications in any discretionary grant competition, the Secretary may consider, under 34 CFR 75.217(d)(3), the past performance of the applicant in carrying out a previous award, such as the applicant's use of funds, achievement of project objectives, and compliance with grant conditions. The Secretary may also consider whether the applicant failed to submit a timely performance report or submitted a report of unacceptable quality.

In addition, in making a competitive grant award, the Secretary requires various assurances including those applicable to Federal civil rights laws that prohibit discrimination in programs or activities receiving Federal financial assistance from the Department (34 CFR 100.4, 104.5, 106.4, 108.8, and 110.23).

3. *Risk Assessment and Specific Conditions:* Consistent with 2 CFR 200.205, before awarding grants under this program the Department conducts a review of the risks posed by applicants. Under 2 CFR 3474.10, the Secretary may impose specific conditions and, in appropriate circumstances, high-risk

conditions on a grant if the applicant or grantee is not financially stable; has a history of unsatisfactory performance; has a financial or other management system that does not meet the standards in 2 CFR part 200, subpart D; has not fulfilled the conditions of a prior grant; or is otherwise not responsible.

4. *Integrity and Performance System:* If you are selected under this competition to receive an award that over the course of the project period may exceed the simplified acquisition threshold (currently $250,000), under 2 CFR 200.205(a)(2) we must make a judgment about your integrity, business ethics, and record of performance under Federal awards—that is, the risk posed by you as an applicant—before we make an award. In doing so, we must consider any information about you that is in the integrity and performance system (currently referred to as the Federal Awardee Performance and Integrity Information System (FAPIIS)), accessible through the System for Award Management. You may review and comment on any information about yourself that a Federal agency previously entered and that is currently in FAPIIS.

Please note that, if the total value of your currently active grants, cooperative agreements, and procurement contracts from the Federal Government exceeds $10,000,000, the reporting requirements in 2 CFR part 200, Appendix XII, require you to report certain integrity information to FAPIIS semiannually. Please review the requirements in 2 CFR part 200, Appendix XII, if this grant plus all the other Federal funds you receive exceed $10,000,000.

VI. Award Administration Information

1. *Award Notices:* If your application is successful, we notify your U.S. Representative and U.S. Senators and send you a Grant Award Notification (GAN); or we may send you an email containing a link to access an electronic version of your GAN. We may notify you informally, also.

If your application is not evaluated or not selected for funding, we notify you.

2. *Administrative and National Policy Requirements:* We identify administrative and national policy requirements in the application package and reference these and other requirements in the *Applicable Regulations* section of this notice.

We reference the regulations outlining the terms and conditions of an award in the *Applicable Regulations* section of this notice and include these and other specific conditions in the GAN. The GAN also incorporates your approved application as part of your binding commitments under the grant.

3. *Open Licensing Requirements:* Unless an exception applies, if you are awarded a grant under this competition, you will be required to openly license to the public grant deliverables created in whole, or in part, with Department grant funds. When the deliverable consists of modifications to pre-existing works, the license extends only to those modifications that can be separately identified and only to the extent that open licensing is permitted under the terms of any licenses or other legal restrictions on the use of pre-existing works. Additionally, a grantee or subgrantee that is awarded competitive grant funds must have a plan to disseminate these public grant deliverables. This dissemination plan can be developed and submitted after your application has been reviewed and selected for funding. For additional information on the open licensing requirements please refer to 2 CFR 3474.20(c).

4. *Reporting:* (a) If you apply for a grant under this competition, you must ensure that you have in place the necessary processes and systems to comply with the reporting requirements in 2 CFR part 170 should you receive funding under the competition. This does not apply if you have an exception under 2 CFR 170.110(b).

(b) At the end of your project period, you must submit a final performance report, including financial information, as directed by the Secretary. If you receive a multiyear award, you must submit an annual performance report (APR) that provides the most current performance and financial expenditure information as directed by the Secretary under 34 CFR 75.118. The Secretary may also require more frequent performance reports under 34 CFR 75.720(c). For specific requirements on reporting, please go to *www.ed.gov/fund/grant/apply/appforms/appforms.html.*

5. *Performance Measures:* The Department has established the following Government Performance and Results Act of 1993 performance measures for the CLSD program:

(1) The percentage of participating four-year-old children who achieve significant gains in oral language skills, as determined by a State-approved measure.

(2) The percentage of participating fifth-grade students who meet or exceed proficiency on State reading/language arts assessments under section 1111(b)(2)(B)(v)(I) of the ESEA.

(3) The percentage of participating eighth-grade students who meet or exceed proficiency on State reading/language arts assessments under section 1111(b)(2)(B)(v)(I) of the ESEA.

(4) The percentage of participating high school students who meet or exceed proficiency on State reading/language arts assessments under section 1111(b)(2)(B)(v)(I) of the ESEA.

(5) The percentage of evidence-based activities implemented by subgrantees that meet the requirements of strong or moderate evidence in the definition of ''evidence-based'' in this notice.

All grantees will be expected to submit an APR that includes data addressing these performance measures to the extent that they apply to the grantee's project. Performance targets will be established by each grantee and must be made for each year of the five-year performance period.

6. *Continuation Awards:* In making a continuation award under 34 CFR 75.253, the Secretary considers, among other things: Whether a grantee has made substantial progress in achieving the goals and objectives of the project; whether the grantee has expended funds in a manner that is consistent with its approved application and budget; and, if the Secretary has established performance measurement requirements, the performance targets in the grantee's approved application.

In making a continuation award, the Secretary also considers whether the grantee is operating in compliance with the assurances in its approved application, including those applicable to Federal civil rights laws that prohibit discrimination in programs or activities receiving Federal financial assistance from the Department (34 CFR 100.4, 104.5, 106.4, 108.8, and 110.23).

VII. Other Information

Accessible Format: Individuals with disabilities can obtain this document and a copy of the application package in an accessible format (*e.g.,* braille, large print, audiotape, or compact disc) on request to the program contact person listed under **FOR FURTHER INFORMATION CONTACT**.

Electronic Access to This Document: The official version of this document is the document published in the **Federal Register**. You may access the official edition of the **Federal Register** and the Code of Federal Regulations at *www.govinfo.gov.* At this site you can view this document, as well as all other documents of this Department published in the **Federal Register**, in text or Portable Document Format (PDF). To use PDF you must have Adobe Acrobat Reader, which is available free at the site.

You may also access documents of the Department published in the **Federal Register** by using the article search feature at: *www.federalregister.gov.* Specifically, through the advanced search feature at this site, you can limit your search to documents published by the Department.

Frank T. Brogan,

Assistant Secretary for Elementary and Secondary Education.

[FR Doc. 2020–07014 Filed 4–2–20; 8:45 am]

BILLING CODE 4000–01–P

DEPARTMENT OF EDUCATION

[Docket No.: ED–2020–SCC–0018]

Agency Information Collection Activities; Submission to the Office of Management and Budget for Review and Approval; Comment Request; Consolidation Loan Rebate Fee Report

AGENCY: Federal Student Aid (FSA), Department of Education (ED).

ACTION: Notice.

SUMMARY: In accordance with the Paperwork Reduction Act of 1995, ED is proposing an extension of an existing information collection.

DATES: Interested persons are invited to submit comments on or before May 4, 2020.

ADDRESSES: Written comments and recommendations for proposed information collection requests should be sent within 30 days of publication of this notice to *www.reginfo.gov/public/do/PRAMain.* Find this particular information collection request by selecting ''Department of Education'' under ''Currently Under Review,'' then check ''Only Show ICR for Public Comment'' checkbox.

FOR FURTHER INFORMATION CONTACT: For specific questions related to collection activities, please contact Beth Grebeldinger, 202–377–4018.

SUPPLEMENTARY INFORMATION: The Department of Education (ED), in accordance with the Paperwork Reduction Act of 1995 (PRA) (44 U.S.C. 3506(c)(2)(A)), provides the general public and Federal agencies with an opportunity to comment on proposed, revised, and continuing collections of information. This helps the Department assess the impact of its information collection requirements and minimize the public's reporting burden. It also helps the public understand the Department's information collection requirements and provide the requested data in the desired format. ED is soliciting comments on the proposed information collection request (ICR) that is described below. The Department of Education is especially interested in public comment addressing the following issues: (1) Is this collection necessary to the proper functions of the Department; (2) will this information be processed and used in a timely manner; (3) is the estimate of burden accurate; (4) how might the Department enhance the quality, utility, and clarity of the information to be collected; and (5) how might the Department minimize the burden of this collection on the respondents, including through the use of information technology. Please note that written comments received in response to this notice will be considered public records.

Title of Collection: Consolidation Loan Rebate Fee Report.

OMB Control Number: 1845–0046.

Type of Review: An extension of an existing information collection.

Respondents/Affected Public: Private Sector.

Total Estimated Number of Annual Responses: 3,456.

Total Estimated Number of Annual Burden Hours: 3,744.

Abstract: The information collected on the Consolidation Loan Rebate Fee Report will be used to document Federal Consolidation loans held by lenders who are responsible for sending interest payment rebate fees to the Secretary of Education using ED Form 4–619.

Dated: March 31, 2020.

Kate Mullan,

PRA Coordinator, Strategic Collections and Clearance Governance and Strategy Division, Office of Chief Data Officer.

[FR Doc. 2020–06991 Filed 4–2–20; 8:45 am]

BILLING CODE 4000–01–P

DEPARTMENT OF ENERGY

[FE Docket Nos. 11–59–LNG, 16–110–LNG]

Lake Charles Exports, LLC; Application To Amend Existing Long-Term Authorizations To Export Liquefied Natural Gas to Non-Free Trade Agreement Countries

AGENCY: Office of Fossil Energy, DOE.

ACTION: Notice of application.

SUMMARY: The Office of Fossil Energy (FE) of the Department of Energy (DOE) gives notice (Notice) of receipt of an application for amendment (Application), filed on March 4, 2020, by Lake Charles Exports, LLC (LCE). LCE requests to amend its existing authorizations to export domestically produced liquefied natural gas (LNG) to non-free trade agreement countries set forth in DOE/FE Order Nos. 3324–A and 4011. Specifically, LCE seeks to amend the commencement of operations deadline in each order. LCE filed the Application under section 3 of the Natural Gas Act (NGA). Protests, motions to intervene, notices of intervention, and written comments are invited.

DATES: Protests, motions to intervene or notices of intervention, as applicable, requests for additional procedures, and written comments are to be filed using procedures detailed in the Public Comment Procedures section no later than 4:30 p.m., Eastern time, April 20, 2020.

ADDRESSES:

Electronic Filing by email: *fergas@hq.doe.gov*

Regular Mail: U.S. Department of Energy (FE–34), Office of Regulation, Analysis, and Engagement, Office of Fossil Energy, P.O. Box 44375, Washington, DC 20026–4375

Hand Delivery or Private Delivery Services (*e.g.,* FedEx, UPS, etc.): U.S. Department of Energy (FE–34), Office of Regulation, Analysis, and Engagement, Office of Fossil Energy, Forrestal Building, Room 3E–042, 1000 Independence Avenue SW, Washington, DC 20585

FOR FURTHER INFORMATION CONTACT:

Benjamin Nussdorf or Amy Sweeney, U.S. Department of Energy (FE–34), Office of Regulation, Analysis, and Engagement, Office of Fossil Energy, Forrestal Building, Room 3E–042, 1000 Independence Avenue SW, Washington, DC 20585, (202) 586–7893; (202) 586–2627, *benjamin.nussdorf@hq.doe.gov* or *amy.sweeney@hq.doe.gov*

Cassandra Bernstein, U.S. Department of Energy (GC–76), Office of the Assistant General Counsel for Electricity and Fossil Energy, Forrestal Building, 1000 Independence Avenue SW, Washington, DC 20585, (202) 586–9793, *cassandra.bernstein@hq.doe.gov*

SUPPLEMENTARY INFORMATION: In each of the above-captioned dockets, DOE/FE has issued an order authorizing LCE to export domestically produced LNG by vessel from the Lake Charles Terminal, located in Lake Charles, Louisiana, to any country with which the United States has not entered into a free trade agreement (FTA) requiring national treatment for trade in natural gas, and with which trade is not prohibited by U.S. law or policy (non-FTA countries) for a 20-year term.

• In DOE/FE Order No. 3324–A (FE Docket No. 11–59–LNG), LCE is authorized to export LNG in a volume equivalent to 730 billion cubic per year (Bcf/yr) of natural gas.[1]

• In DOE/FE Order No. 4011 (FE Docket No. 16–110–LNG), LCE is authorized to export LNG in a volume equivalent to 121 Bcf/yr of natural gas.[2]

In the Application, LCE seeks to amend the existing commencement of operations deadline in both orders as follows:

• In DOE/FE Order No. 3324–A, to extend the commencement deadline from July 29, 2023, to December 16, 2025; and

• In DOE/FE Order No. 4011, to extend the commencement deadline from June 29, 2024, to December 16, 2025.[3]

In support of this Application, LCE states that, on December 5, 2019, the Federal Energy Regulatory Commission (FERC) issued an order granting LCE's request for an extension of time until December 16, 2025, to construct the Lake Charles Terminal liquefaction facilities (FERC Extension Order). LCE requests that DOE/FE amend Order Nos. 3324–A and 4011 so that LCE must commence export operations using the planned liquefaction facilities no later than December 16, 2025—to align with the FERC Extension Order. LCE also identifies the actions it has taken to date to proceed with the construction and operation of the Lake Charles Terminal liquefaction facilities. Additional details can be found in the Application, posted on the DOE/FE website at: *https://www.energy.gov/sites/prod/files/2020/03/f72/LCE%20Final%20Amendment%20Application.pdf.*

DOE/FE Evaluation

In reviewing LCE's Application, DOE will consider any issues required by law or policy. DOE will consider domestic need for the natural gas, as well as any other issues determined to be appropriate, including whether the arrangement is consistent with DOE's policy of promoting competition in the marketplace by allowing commercial parties to freely negotiate their own trade arrangements. As part of this analysis, DOE will consider the study entitled, *Macroeconomic Outcomes of Market Determined Levels of U.S. LNG Exports* (2018 LNG Export Study),[4] and DOE/FE's response to public comments received on that Study.[5]

Additionally, DOE will consider the following environmental documents:

• *Addendum to Environmental Review Documents Concerning Exports of Natural Gas From the United States,* 79 FR 48132 (Aug. 15, 2014);[6]

• *Life Cycle Greenhouse Gas Perspective on Exporting Liquefied Natural Gas From the United States,* 79 FR 32260 (June 4, 2014);[7] and

• *Life Cycle Greenhouse Gas Perspective on Exporting Liquefied Natural Gas From the United States: 2019 Update,* 84 FR 49278 (Sept. 19, 2019), and DOE/FE's response to public comments received on that study.[8]

Parties that may oppose this Application should address these issues and documents in their comments and protests, as well as other issues deemed relevant to the Application.

The National Environmental Policy Act (NEPA), 42 U.S.C. 4321 *et seq.,* requires DOE to give appropriate consideration to the environmental effects of its proposed decisions. No final decision will be issued in this proceeding until DOE has met its environmental responsibilities.

Public Comment Procedures

In response to this Notice, any person may file a protest, comments, or a motion to intervene or notice of intervention, as applicable. Interested parties will be provided 15 days from the date of publication of this Notice in which to submit comments, protests, motions to intervene, or notices of intervention. DOE/FE will disregard comments or protests that do not bear directly on the Application.

Any person wishing to become a party to the proceeding must file a motion to intervene or notice of intervention. The filing of comments or a protest with respect to the Application will not serve to make the commenter or protestant a party to the proceeding, although protests and comments received from persons who are not parties will be considered in determining the appropriate action to be taken on the Application. All protests, comments, motions to intervene, or notices of intervention must meet the requirements specified by the regulations in 10 CFR part 590.

Filings may be submitted using one of the following methods: (1) Emailing the filing to *fergas@hq.doe.gov,* with FE Docket Nos. 11–59–LNG and 16–110–LNG in the title line; (2) mailing an original and three paper copies of the filing to the Office of Regulation, Analysis, and Engagement at the address listed in **ADDRESSES**; or (3) hand delivering an original and three paper copies of the filing to the Office of Regulation, Analysis, and Engagement at the address listed in **ADDRESSES**. All filings must include a reference to FE Docket Nos. 11–59–LNG and 16–110–LNG. PLEASE NOTE: If submitting a filing via email, please include all related documents and attachments (*e.g.,* exhibits) in the original email correspondence. Please do not include any active hyperlinks or password protection in any of the documents or attachments related to the filing. All electronic filings submitted to DOE must follow these guidelines to ensure that all documents are filed in a timely manner. Any hardcopy filing submitted greater in length than 50 pages must also include, at the time of the filing, a digital copy on disk of the entire submission.

A decisional record on the Application will be developed through responses to this Notice by parties, including the parties' written comments and replies thereto. Additional procedures will be used as necessary to achieve a complete understanding of the facts and issues. If an additional procedure is scheduled, notice will be provided to all parties. If no party requests additional procedures, a final Opinion and Order may be issued based on the official record, including the

[1] *Lake Charles Exports, LLC,* DOE/FE Order No. 3324–A, FE Docket No. 11–59–LNG, Final Opinion and Order Granting Long-Term, Multi-Contract Authorization to Export Liquefied Natural Gas by Vessel from the Lake Charles Terminal Located in Calcasieu Parish, Louisiana, to Non-Free Trade Agreement Nations (July 29, 2016).

[2] *Lake Charles Exports, LLC,* DOE/FE Order No. 4011, FE Docket No. 16–110–LNG, Opinion and Order Granting Long-Term, Multi-Contract Authorization to Export Liquefied Natural Gas by Vessel from the Lake Charles Terminal Located in Lake Charles, Louisiana, to Free Trade Agreement and Non-Free Trade Agreement Nations (June 29, 2017).

[3] Lake Charles Exports, LLC, Application for Amendment to Long-Term Authorizations to Export Liquefied Natural Gas to Free Trade Agreement and Non-Free Trade Agreement Countries, FE Docket Nos. 11–59–LNG & 16–110–LNG, at 1–4 (Mar. 4, 2020). The Application also applies to LCE's existing FTA orders in FE Docket Nos. 11–59–LNG and 16–110–LNG, but DOE/FE will address the FTA portions of the Application separately pursuant to NGA section 3(c), 15 U.S.C. 717b(c).

[4] *See* NERA Economic Consulting, Macroeconomic Outcomes of Market Determined Levels of U.S. LNG Exports (June 7, 2018), *available at: https://www.energy.gov/sites/prod/files/2018/06/f52/Macroeconomic%20LNG%20Export%20Study%202018.pdf.*

[5] U.S. Dep't of Energy, Study on Macroeconomic Outcomes of LNG Exports: Response to Comments Received on Study; Notice of Response to Comments, 83 FR 67251 (Dec. 28, 2018).

[6] The Addendum and related documents are available at: *http://energy.gov/fe/draft-addendum-environmental-review-documents-concerning-exports-natural-gas-united-states.*

[7] The Life Cycle Greenhouse Gas Report is available at: *http://energy.gov/fe/life-cycle-greenhouse-gas-perspective-exporting-liquefied-natural-gas-united-states.*

[8] U.S. Dep't of Energy, Life Cycle Greenhouse Gas Perspective on Exporting Liquefied Natural Gas From the United States: 2019 Update—Response to Comments, 85 FR 72 (Jan. 2, 2020). The 2019 Update and related documents are available at: *https://fossil.energy.gov/app/docketindex/docket/index/21.*

Application and responses filed by parties pursuant to this Notice, in accordance with 10 CFR 590.316.

The Application is available for inspection and copying in the Office of Regulation, Analysis, and Engagement docket room, Room 3E–042, 1000 Independence Avenue SW, Washington, DC 20585. The docket room is open between the hours of 8:00 a.m. and 4:30 p.m., Monday through Friday, except Federal holidays. The Application and any filed protests, motions to intervene or notice of interventions, and comments will also be available electronically by going to the following DOE/FE Web address: *http://www.fe.doe.gov/programs/gasregulation/index.html.*

Signed in Washington, DC, on March 30, 2020.

Amy Sweeney,

Director, Office of Regulation, Analysis, and Engagement, Office of Fossil Energy.

[FR Doc. 2020–06936 Filed 4–2–20; 8:45 am]

BILLING CODE 6450–01–P

DEPARTMENT OF ENERGY

[FE Docket Nos. 13–04–LNG, 16–109–LNG]

Lake Charles LNG Export Company, LLC; Application To Amend Existing Long-Term Authorizations To Export Liquefied Natural Gas to Non-Free Trade Agreement Countries

AGENCY: Office of Fossil Energy, DOE.

ACTION: Notice of application.

SUMMARY: The Office of Fossil Energy (FE) of the Department of Energy (DOE) gives notice (Notice) of receipt of an application for amendment (Application), filed on March 4, 2020, by Lake Charles LNG Export Company, LLC (Lake Charles LNG Export). Lake Charles LNG Export requests to amend its existing authorizations to export domestically produced liquefied natural gas (LNG) to non-free trade agreement countries set forth in DOE/FE Order Nos. 3868 and 4010. Specifically, Lake Charles LNG Export seeks to amend the commencement of operations deadline in each order. Lake Charles LNG Export filed the Application under section 3 of the Natural Gas Act (NGA). Protests, motions to intervene, notices of intervention, and written comments are invited.

DATES: Protests, motions to intervene or notices of intervention, as applicable, requests for additional procedures, and written comments are to be filed using procedures detailed in the Public Comment Procedures section no later than 4:30 p.m., Eastern time, April 20, 2020.

ADDRESSES:

Electronic Filing by email: *fergas@hq.doe.gov*

Regular Mail: U.S. Department of Energy (FE–34) Office of Regulation, Analysis, and Engagement, Office of Fossil Energy, P.O. Box 44375, Washington, DC 20026–4375

Hand Delivery or Private Delivery Services (*e.g.,* FedEx, UPS, etc.): U.S. Department of Energy (FE–34), Office of Regulation, Analysis, and Engagement, Office of Fossil Energy, Forrestal Building, Room 3E–042, 1000 Independence Avenue SW, Washington, DC 20585

FOR FURTHER INFORMATION CONTACT:

Benjamin Nussdorf or Amy Sweeney, U.S. Department of Energy (FE–34), Office of Regulation, Analysis, and Engagement, Office of Fossil Energy, Forrestal Building, Room 3E–042, 1000 Independence Avenue SW, Washington, DC 20585, (202) 586–7893; (202) 586–2627, *benjamin.nussdorf@hq.doe.gov* or *amy.sweeney@hq.doe.gov*

Cassandra Bernstein, U.S. Department of Energy (GC–76), Office of the Assistant General Counsel for Electricity and Fossil Energy, Forrestal Building, 1000 Independence Avenue SW, Washington, DC 20585, (202) 586–9793, *cassandra.bernstein@hq.doe.gov*

SUPPLEMENTARY INFORMATION: In each of the above-captioned dockets, DOE/FE has issued an order authorizing Lake Charles LNG Export to export domestically produced LNG by vessel from the Lake Charles Terminal, located in Lake Charles, Louisiana, to any country with which the United States has not entered into a free trade agreement (FTA) requiring national treatment for trade in natural gas, and with which trade is not prohibited by U.S. law or policy (non-FTA countries) for a 20-year term.

- In DOE/FE Order No. 3868 (FE Docket No. 13–04–LNG), Lake Charles LNG Export is authorized to export LNG in a volume equivalent to 730 billion cubic per year (Bcf/yr) of natural gas.[1]
- In DOE/FE Order No. 4010 (FE Docket No. 16–109–LNG), Lake Charles LNG Export is authorized to export LNG in a volume equivalent to 121 Bcf/yr of natural gas.[2]

In the Application, Lake Charles LNG Export seeks to amend the existing commencement of operations deadline in both orders as follows:

- In DOE/FE Order No. 3868, to extend the commencement deadline from July 29, 2023, to December 16, 2025; and
- In DOE/FE Order No. 4010, to extend the commencement deadline from June 29, 2024, to December 16, 2025.[3]

In support of this Application, Lake Charles LNG Export states that, on December 5, 2019, the Federal Energy Regulatory Commission (FERC) issued an order granting Lake Charles LNG Export's request for an extension of time until December 16, 2025, to construct the Lake Charles Terminal liquefaction facilities (FERC Extension Order). Lake Charles LNG Export requests that DOE/FE amend Order Nos. 3868 and 4010 so that Lake Charles LNG Export must commence export operations using the planned liquefaction facilities no later than December 16, 2025—to align with the FERC Extension Order. Lake Charles LNG Export also identifies the actions it has taken to date to proceed with the construction and operation of the Lake Charles Terminal liquefaction facilities. Additional details can be found in the Application, posted on the DOE/FE website at: *https://www.energy.gov/sites/prod/files/2020/03/f72/LCLNG%20Final%20Amendment%20Application.pdf.*

DOE/FE Evaluation

In reviewing Lake Charles LNG Export's Application, DOE will consider any issues required by law or policy. DOE will consider domestic need for the natural gas, as well as any other issues determined to be appropriate, including whether the arrangement is consistent with DOE's policy of promoting competition in the marketplace by allowing commercial parties to freely

[1] *Lake Charles LNG Export Co., LLC,* DOE/FE Order No. 3868, FE Docket No. 13–04–LNG, Opinion and Order Granting Long-Term, Multi-Contract Authorization to Export Liquefied Natural Gas by Vessel from the Lake Charles Terminal Located in Calcasieu Parish, Louisiana, to Non-Free Trade Agreement Nations (July 29, 2016).

[2] *Lake Charles LNG Export Co., LLC,* DOE/FE Order No. 4010, FE Docket No. 16–109–LNG, Opinion and Order Granting Long-Term, Multi-Contract Authorization to Export Liquefied Natural Gas by Vessel from the Lake Charles Terminal in Lake Charles, Louisiana, to Free Trade Agreement and Non-Free Trade Agreement Nations (June 29, 2017).

[3] Lake Charles LNG Export Co., LLC, Application for Amendment to Long-Term Authorizations to Export Liquefied Natural Gas to Free Trade Agreement and Non-Free Trade Agreement Countries, FE Docket Nos. 13–04–LNG & 16–109–LNG, at 1–4 (Mar. 4, 2020). The Application also applies to Lake Charles LNG Export's existing FTA orders in FE Docket Nos. 13–04–LNG and 16–109–LNG, but DOE/FE will address the FTA portions of the Application separately pursuant to NGA section 3(c), 15 U.S.C. 717b(c).

negotiate their own trade arrangements. As part of this analysis, DOE will consider the study entitled, *Macroeconomic Outcomes of Market Determined Levels of U.S. LNG Exports* (2018 LNG Export Study),[4] and DOE/FE's response to public comments received on that Study.[5]

Additionally, DOE will consider the following environmental documents:

- *Addendum to Environmental Review Documents Concerning Exports of Natural Gas From the United States,* 79 FR 48132 (Aug. 15, 2014);[6]
- *Life Cycle Greenhouse Gas Perspective on Exporting Liquefied Natural Gas From the United States,* 79 FR 32260 (June 4, 2014);[7] and
- *Life Cycle Greenhouse Gas Perspective on Exporting Liquefied Natural Gas From the United States: 2019 Update,* 84 FR 49278 (Sept. 19, 2019), and DOE/FE's response to public comments received on that study.[8]

Parties that may oppose this Application should address these issues and documents in their comments and protests, as well as other issues deemed relevant to the Application.

The National Environmental Policy Act (NEPA), 42 U.S.C. 4321 *et seq.,* requires DOE to give appropriate consideration to the environmental effects of its proposed decisions. No final decision will be issued in this proceeding until DOE has met its environmental responsibilities.

Public Comment Procedures

In response to this Notice, any person may file a protest, comments, or a motion to intervene or notice of intervention, as applicable. Interested parties will be provided 15 days from the date of publication of this Notice in which to submit comments, protests, motions to intervene, or notices of intervention. DOE/FE will disregard comments or protests that do not bear directly on the Application.

Any person wishing to become a party to the proceeding must file a motion to intervene or notice of intervention. The filing of comments or a protest with respect to the Application will not serve to make the commenter or protestant a party to the proceeding, although protests and comments received from persons who are not parties will be considered in determining the appropriate action to be taken on the Application. All protests, comments, motions to intervene, or notices of intervention must meet the requirements specified by the regulations in 10 CFR part 590.

Filings may be submitted using one of the following methods: (1) Emailing the filing to *fergas@hq.doe.gov,* with FE Docket Nos. 13–04–LNG and 16–109–LNG in the title line; (2) mailing an original and three paper copies of the filing to the Office of Regulation, Analysis, and Engagement at the address listed in **ADDRESSES**; or (3) hand delivering an original and three paper copies of the filing to the Office of Regulation, Analysis, and Engagement at the address listed in **ADDRESSES**. All filings must include a reference to FE Docket Nos. 13–04–LNG and 16–109–LNG. PLEASE NOTE: If submitting a filing via email, please include all related documents and attachments (*e.g.,* exhibits) in the original email correspondence. Please do not include any active hyperlinks or password protection in any of the documents or attachments related to the filing. All electronic filings submitted to DOE must follow these guidelines to ensure that all documents are filed in a timely manner. Any hardcopy filing submitted greater in length than 50 pages must also include, at the time of the filing, a digital copy on disk of the entire submission.

A decisional record on the Application will be developed through responses to this notice by parties, including the parties' written comments and replies thereto. Additional procedures will be used as necessary to achieve a complete understanding of the facts and issues. If an additional procedure is scheduled, notice will be provided to all parties. If no party requests additional procedures, a final Opinion and Order may be issued based on the official record, including the Application and responses filed by parties pursuant to this notice, in accordance with 10 CFR 590.316.

The Application is available for inspection and copying in the Office of Regulation, Analysis, and Engagement docket room, Room 3E–042, 1000 Independence Avenue SW, Washington, DC 20585. The docket room is open between the hours of 8:00 a.m. and 4:30 p.m., Monday through Friday, except Federal holidays. The Application and any filed protests, motions to intervene or notice of interventions, and comments will also be available electronically by going to the following DOE/FE Web address: *http://www.fe.doe.gov/programs/gasregulation/index.html.*

Signed in Washington, DC, on March 30, 2020.

Amy Sweeney,

Director, Office of Regulation, Analysis, and Engagement, Office of Fossil Energy.

[FR Doc. 2020–06937 Filed 4–2–20; 8:45 am]

BILLING CODE 6450–01–P

[4] *See* NERA Economic Consulting, Macroeconomic Outcomes of Market Determined Levels of U.S. LNG Exports (June 7, 2018), *available at: https://www.energy.gov/sites/prod/files/2018/06/f52/Macroeconomic%20LNG%20Export%20Study%202018.pdf.*

[5] U.S. Dep't of Energy, Study on Macroeconomic Outcomes of LNG Exports: Response to Comments Received on Study; Notice of Response to Comments, 83 FR 67251 (Dec. 28, 2018).

[6] The Addendum and related documents are available at: *http://energy.gov/fe/draft-addendum-environmental-review-documents-concerning-exports-natural-gas-united-states.*

[7] The 2014 Life Cycle Greenhouse Gas Report is available at: *http://energy.gov/fe/life-cycle-greenhouse-gas-perspective-exporting-liquefied-natural-gas-united-states.*

[8] U.S. Dep't of Energy, Life Cycle Greenhouse Gas Perspective on Exporting Liquefied Natural Gas From the United States: 2019 Update—Response to Comments, 85 FR 72 (Jan. 2, 2020). The 2019 Update and related documents are available at: *https://fossil.energy.gov/app/docketindex/docket/index/21.*

DEPARTMENT OF ENERGY

National Nuclear Security Administration

Notice of Availability of Draft Environmental Impact Statement for Plutonium Pit Production at the Savannah River Site in South Carolina and Announcement of Public Hearing

AGENCY: National Nuclear Security Administration, Department of Energy.

ACTION: Notice of availability and public hearing.

SUMMARY: The National Nuclear Security Administration (NNSA), a semi-autonomous agency within the United States (U.S.) Department of Energy (DOE), announces the availability of a Draft Environmental Impact Statement for Plutonium Pit Production at the Savannah River Site in South Carolina (SRS Pit Production EIS) (DOE/EIS–0541). NNSA is also announcing a 45-day public comment period and one public hearing to receive comments on the Draft EIS. NNSA prepared the Draft EIS to evaluate the potential environmental impacts of producing a minimum of 50 war reserve pits per year at SRS and developing the ability to implement a short-term surge capacity to enable NNSA to meet the requirements of producing pits at a rate of not less than 80 war reserve pits per year beginning during 2030 for the nuclear weapons stockpile.

DATES: NNSA invites Federal and state agencies, state and local governments, Native American tribes, industry, other organizations, and members of the public to review and submit comments on the Draft SRS Pit Production EIS through May 18, 2020. NNSA is

planning to hold one public hearing on the Draft EIS as follows:

In light of recent public health concerns, NNSA will be hosting an internet-based, virtual public hearing in place of an in-person meeting. The date of the hearing will be provided in a future notice posted on the following website: *https://www.energy.gov/nnsa/nnsa-nepa-reading-room*. NNSA will hold the hearing no earlier than 15 days from the posting of the notice.

ADDRESSES: Written and oral comments will be given equal weight and NNSA will consider all comments received or postmarked by the end of the comment period in preparing the Final EIS. Comments received or postmarked after the comment period will be considered to the extent practicable. Written comments on the Draft EIS or requests for information related to the Draft EIS should be sent to Ms. Jennifer Nelson, NEPA Compliance Officer, National Nuclear Security Administration, Savannah River Field Office, P.O. Box A, Aiken, SC 29802; or sent by email to *NEPA–SRS@srs.gov*. Before including your address, phone number, email address, or other personally identifiable information in your comment, please be advised that your entire comment—including your personally identifiable information—may be made publicly available. If you wish for NNSA to withhold your name and/or other personally identifiable information, please state this prominently at the beginning of your comment. You may also submit comments anonymously.

The Draft SRS Pit Production EIS is available on the internet at: *https://www.energy.gov/nnsa/nnsa-nepa-reading-room* and *https://www.energy.gov/nepa/listings/latest-documents-and-notices*.

Information related to the online public hearing, including internet and telephone access details, and instructions on how to participate will be available at the following website: *https://www.energy.gov/nnsa/nnsa-nepa-reading-room* and announced in local media outlets.

FOR FURTHER INFORMATION CONTACT: For further information about this Notice, please contact Ms. Jennifer Nelson, NEPA Compliance Officer, National Nuclear Security Administration Savannah River Field Office, P.O. Box A, Aiken, SC 29802; email: *NEPA–SRS@srs.gov*.

SUPPLEMENTARY INFORMATION: National security policies require DOE, through NNSA, to maintain the United States' nuclear weapons stockpile, as well as the nation's core competencies in nuclear weapons. NNSA has the mission to maintain and enhance the safety, security, and effectiveness of the nuclear weapons stockpile. Plutonium pits are critical components of every nuclear weapon, with nearly all current stockpile pits having been produced from 1978–1989. Today, the United States' capability to produce plutonium pits is limited.

NNSA's pit production mission was emphasized as a national security imperative by the 2018 Nuclear Posture Review, issued in February 2018 by the Office of the Secretary of Defense, and subsequent congressional statements of the policy of the United States. The 2018 Nuclear Posture Review announced that the United States will pursue initiatives to ensure the necessary capability, capacity, and responsiveness of the nuclear weapons infrastructure and the needed skill of the workforce, including providing the enduring capability and capacity to produce no fewer than 80 pits per year by 2030. The 2018 Nuclear Posture Review concludes that the United States must have sufficient research, design, development, and production capacity to support the sustainment of its nuclear forces. Additionally, in Section 3116 of the National Defense Authorization Act (NDAA) for Fiscal Year (FY) 2020, Congress required NNSA to produce 80 plutonium pits per year beginning during 2030.

To that end, the Under Secretary of Defense for Acquisition and Sustainment and Under Secretary for Nuclear Security and Administrator of the NNSA issued a Joint Statement on May 10, 2018, identifying their recommended alternative to meet the pit production requirement based on the completion of an Analysis of Alternatives, an Engineering Assessment, and a Workforce Analysis. To achieve the nation's requirement of producing no fewer than 80 pits per year beginning during 2030, NNSA has proposed to repurpose the Mixed-Oxide Fuel Fabrication Facility (MFFF) at SRS to produce plutonium pits while also relying upon pit production activities at the Los Alamos National Laboratory (LANL). This two-pronged approach—with a minimum of 50 pits per year produced at SRS and a minimum of 30 pits per year at LANL—is considered the best way to manage the cost, schedule, and risk of such a vital undertaking. This approach improves the resiliency, flexibility, and redundancy of our Nuclear Security Enterprise by reducing reliance on a single production site.

The SRS Pit Production EIS is an important element of the overall NEPA strategy related to fulfilling national requirements for pit production, which NNSA announced on June 10, 2019 (84 FR 26849). In the Draft EIS, NNSA evaluates the potential impacts to the environment and human health from the following alternatives: (1) Proposed Action to repurpose MFFF into the Savannah River Plutonium Processing Facility (SRPPF) to produce a minimum of 50 pits per year; and (2) No Action Alternative. The Proposed Action to construct and operate the SRPPF to produce a minimum of 50 pits per year includes, but is not limited to: Reconfiguration (including disassembly and removal of equipment and utility commodities) of the MFFF; installation of equipment necessary for activities associated with pit production before disassembly/metal preparation, pit assembly, machining, aqueous processing, foundry operations, material characterization, and analytical chemistry operations for certification); constructing and repurposing other facilities surrounding the SRPPF for support activities (*e.g.,* waste handling, training, office space, roads, storage, and parking); security and nuclear safety upgrades to support pit production; providing reliable utilities and infrastructure required for pit production; and hiring and training necessary workforce to ensure the safe, secure, reliable, and responsive capability for pit production at SRS. Under the No-Action Alternative, the existing MFFF would remain unused and NNSA would utilize the capabilities at LANL to meet the Nation's long-term needs for pit manufacturing.

Following this public comment period, and after consideration of comments received, NNSA will prepare a Final SRS Pit Production EIS. NNSA will announce the availability of the Final EIS in the **Federal Register** and local media outlets. If warranted, NNSA will issue a record of decision (ROD) no sooner than 30 days after publication by the Environmental Protection Agency of a Notice of Availability of the Final EIS.

Signed in Washington, DC, this 16th day of March 2020, for the United States Department of Energy.

Lisa E. Gordon-Hagerty,

Under Secretary for Nuclear Security, Administrator, NNSA.

[FR Doc. 2020–06557 Filed 4–2–20; 8:45 am]

BILLING CODE 6450–01–P

DEPARTMENT OF ENERGY

Federal Energy Regulatory Commission

[Docket No. FA17–5–001]

Northern States Power Company, a Minnesota Corporation; Notice of Filing

Take notice that on March 27, 2020, the Northern States Power Company, a Minnesota corporation submitted an Electric Refund Report in compliance with the Commission's July 31, 2019 letter order; pursuant to audit report finding(s) Nos. 1, 2 and 3.

Any person desiring to intervene or to protest this filing must file in accordance with Rules 211 and 214 of the Commission's Rules of Practice and Procedure (18 CFR 385.211, 385.214). Protests will be considered by the Commission in determining the appropriate action to be taken, but will not serve to make protestants parties to the proceeding. Any person wishing to become a party must file a notice of intervention or motion to intervene, as appropriate. Such notices, motions, or protests must be filed on or before the comment date. On or before the comment date, it is not necessary to serve motions to intervene or protests on persons other than the Applicant.

The Commission encourages electronic submission of protests and interventions in lieu of paper using the ''eFiling'' link at *http://www.ferc.gov.* Persons unable to file electronically should submit an original and 5 copies of the protest or intervention to the Federal Energy Regulatory Commission, 888 First Street NE, Washington, DC 20426.

In addition to publishing the full text of this document in the **Federal Register**, the Commission provides all interested persons an opportunity to view and/or print the contents of this document via the internet through the Commission's Home Page (*http://www.ferc.gov*) using the ''eLibrary'' link. Enter the docket number excluding the last three digits in the docket number field to access the document. At this time, the Commission has suspended access to Commission's Public Reference Room, due to the proclamation declaring a National Emergency concerning the Novel Coronavirus Disease (COVID–19), issued by the President on March 13, 2020. For assistance, contact FERC at *FERCOnlineSupport@ferc.gov* or call toll-free, (886) 208–3676 or TYY, (202) 502–8659.

Comment Date: 5:00 p.m. Eastern Time on April 17, 2020.

Dated: March 30, 2020.

Kimberly D. Bose,

Secretary.

[FR Doc. 2020–06999 Filed 4–2–20; 8:45 am]

BILLING CODE 6717–01–P

DEPARTMENT OF ENERGY

Federal Energy Regulatory Commission

[Docket No. EL20–33–000]

City of Goose Creek v. South Carolina Public Service Authority; Notice of Amended and Restated Complaint

Take notice that on March 26, 2020, pursuant to sections 206 and 306 of the Federal Power Act,[1] and Rule 206 and 215 of the Rules of Practice and Procedures of the Federal Energy Regulatory Commission (Commission), 18 CFR 385.206 and 385.215, the City of Goose Creek, (Complainant) filed an amended and restated complaint against the South Carolina Public Service Authority (Santee Cooper or Respondent) alleging that Santee Cooper has unjustly and unreasonably denied transmission service to the City of Goose Creek and unduly discriminated against the City of Goose Creek by denial of this service, as more fully explained in the complaint.

The Complainant certifies that copies of the amended and restated complaint were served on the contacts for the Respondent as listed on the Commission's list of Corporate Officials.

Any person desiring to intervene or to protest this filing must file in accordance with Rules 211 and 214 of the Commission's Rules of Practice and Procedure (18 CFR 385.211, 385.214). Protests will be considered by the Commission in determining the appropriate action to be taken but will not serve to make protestants parties to the proceeding. Any person wishing to become a party must file a notice of intervention or motion to intervene, as appropriate. The Respondent's answer and all interventions, or protests must be filed on or before the comment date. The Respondent's answer, motions to intervene, and protests must be served on the Complainant.

The Commission encourages electronic submission of protests and interventions in lieu of paper using the ''eFiling'' link at *http://www.ferc.gov.* Persons unable to file electronically should submit an original and 5 copies of the protest or intervention to the Federal Energy Regulatory Commission, 888 First Street NE, Washington, DC 20426.

In addition to publishing the full text of this document in the **Federal Register**, The Commission provides all interested persons an opportunity to view and/or print the contents of this document via the internet through the Commission's Home Page (*http://www.ferc.gov*) using the ''eLibrary'' link. Enter the docket number excluding the last three digits in the docket number field to access the document. At this time, the Commission has suspended access to Commission's Public Reference Room, due to the proclamation declaring a National Emergency concerning the Novel Coronavirus Disease (COVID–19), issued by the President on March 13, 2020. For assistance, contact FERC at *FERCOnlineSupport@ferc.gov* or call toll-free, (886) 208–3676 or TYY, (202) 502–8659.

Comment Date: 5:00 p.m. Eastern Time on April 15, 2020.

Dated: March 30, 2020.

Nathaniel J. Davis, Sr.,

Deputy Secretary.

[FR Doc. 2020–07027 Filed 4–2–20; 8:45 am]

BILLING CODE 6717–01–P

[1] 16 U.S.C. 824e, 824i, 824j, 825e (2019).

DEPARTMENT OF ENERGY

Federal Energy Regulatory Commission

[Docket No. EL20–35–000]

Energy Harbor LLC; Notice of Institution of Section 206 Proceeding and Refund Effective Date

On March 30, 2020, the Commission issued an order in Docket No. EL20–35–000 pursuant to section 206 of the Federal Power Act (FPA), 16 U.S.C. 824e (2018), instituting an investigation into Energy Harbor LLC's proposed rejection in bankruptcy of certain contracts that are subject to the Commission's jurisdiction. *Energy Harbor LLC,* 170 FERC ¶ 61,278 (2020).

The refund effective date in Docket No. EL20–35–000, established pursuant to section 206(b) of the FPA, will be the date of publication of this notice in the **Federal Register**.

Any interested person desiring to be heard in Docket No. EL20–35–000 must file a notice of intervention or motion to intervene, as appropriate, with the Federal Energy Regulatory Commission, 888 First Street NE, Washington, DC 20426, in accordance with Rule 214 of the Commission's Rules of Practice and Procedure, 18 CFR 385.214 (2019), within 21 days of the date of issuance of the order.

Dated: March 30, 2020.

Nathaniel J. Davis, Sr.,

Deputy Secretary.

[FR Doc. 2020–07021 Filed 4–2–20; 8:45 am]

BILLING CODE 6717–01–P

DEPARTMENT OF ENERGY

Federal Energy Regulatory Commission

Combined Notice of Filings

Take notice that the Commission has received the following Natural Gas Pipeline Rate and Refund Report filings:

Docket Numbers: RP20–683–000.
Applicants: Bison Pipeline LLC.
Description: Bison Pipeline LLC submits tariff filing per 154.203: Company Use Gas Annual Report 2020.
Filed Date: 03/26/2020.
Accession Number: 20200326–5037.
Comment Date: 5 p.m. ET 4/07/2020.

Docket Numbers: RP20–684–000.
Applicants: Trailblazer Pipeline Company LLC.
Description: Trailblazer Pipeline Company LLC submits tariff filing per 154.203: TPC 2019 Annual Purchases and Sales Report.
Filed Date: 03/26/2020.
Accession Number: 20200326–5103.
Comment Date: 5 p.m. ET 4/07/2020.

Docket Numbers: RP20–685–000.
Applicants: Rockies Express Pipeline LLC.
Description: Rockies Express Pipeline LLC submits tariff filing per 154.203: REX 2019 Annual Purchases and Sales Report.
Filed Date: 03/26/2020.
Accession Number: 20200326–5105.
Comment Date: 5 p.m. ET 4/07/2020.

Docket Numbers: RP20–686–000.
Applicants: Natural Gas Pipeline Company of America.
Description: Natural Gas Pipeline Company of America LLC submits tariff filing per 154.204: Negotiated Rate Filing—NIPSCO to be effective 4/1/2020.
Filed Date: 03/26/2020.
Accession Number: 20200326–5130.
Comment Date: 5 p.m. ET 4/07/2020.

Docket Numbers: RP20–687–000.
Applicants: Cheniere Corpus Christi Pipeline L.P.
Description: Annual Operational Transaction Report of Cheniere Corpus Christi Pipeline, L.P. under RP20–687.
Filed Date: 03/26/2020.
Accession Number: 20200326–5139.
Comment Date: 5 p.m. ET 4/07/2020.

The filings are accessible in the Commission's eLibrary system by clicking on the links or querying the docket number.

Any person desiring to intervene or protest in any of the above proceedings must file in accordance with Rules 211 and 214 of the Commission's Regulations (18 CFR 385.211 and 385.214) on or before 5:00 p.m. Eastern time on the specified date(s). Protests may be considered, but intervention is necessary to become a party to the proceeding.

eFiling is encouraged. More detailed information relating to filing requirements, interventions, protests, service, and qualifying facilities filings can be found at: *http://www.ferc.gov/docs-filing/efiling/filing-req.pdf.* For other information, call (866) 208–3676 (toll free). For TTY, call (202) 502–8659.

Dated: March 30, 2020.

Nathaniel J. Davis, Sr.,

Deputy Secretary.

[FR Doc. 2020–07020 Filed 4–2–20; 8:45 am]

BILLING CODE 6717–01–P

DEPARTMENT OF ENERGY

Federal Energy Regulatory Commission

Combined Notice of Filings #1

Take notice that the Commission received the following electric rate filings:

Docket Numbers: ER10–1285–008.
Applicants: Craven County Wood Energy Limited Partnership.
Description: Supplement to September 12, 2019 Notice of Non-Material Change-In-Status of Craven County Wood Energy Limited Partnership.
Filed Date: 3/24/20.
Accession Number: 20200324–5187.
Comments Due: 5 p.m. ET 4/14/20.

Docket Numbers: ER10–2633–037.
Applicants: Birchwood Power Partners, L.P.
Description: Notice of Change in Status of Birchwood Power Partners, L.P.
Filed Date: 3/27/20.
Accession Number: 20200327–5321.
Comments Due: 5 p.m. ET 4/17/20.

Docket Numbers: ER20–1415–000.
Applicants: Tri-State Generation and Transmission Association, Inc.
Description: § 205(d) Rate Filing: Service Agreement No. 723 between Tri-State and GNE to be effective 2/27/2020.
Filed Date: 3/27/20.
Accession Number: 20200327–5262.
Comments Due: 5 p.m. ET 4/17/20.

Docket Numbers: ER20–1416–000.
Applicants: PJM Interconnection, L.L.C.
Description: § 205(d) Rate Filing: Revisions to OA, Schedule 6, sec 1.5 re: Actual Study Cost Recovery to be effective 5/27/2020.
Filed Date: 3/27/20.
Accession Number: 20200327–5276.
Comments Due: 5 p.m. ET 4/17/20.

Docket Numbers: ER20–1417–000.
Applicants: Roundhouse Renewable Energy, LLC.
Description: Baseline eTariff Filing: Roundhouse Renewable Energy, LLC Application for MBR Authority to be effective 5/27/2020.
Filed Date: 3/27/20.
Accession Number: 20200327–528.0.
Comments Due: 5 p.m. ET 4/17/20.

Docket Numbers: ER20–1418–000.
Applicants: Pacific Gas and Electric Company.
Description: Compliance filing: FERC Order No. 864 (re: ADIT) TO Tariff Compliance Filing to be effective 1/27/2020.
Filed Date: 3/27/20.
Accession Number: 20200327–5300.
Comments Due: 5 p.m. ET 4/17/20.

Docket Numbers: ER20–1419–000.
Applicants: New York Independent System Operator, Inc.
Description: Request for Waiver of Tariff Provisions, et al. of New York Independent System Operator, Inc.
Filed Date: 3/27/20.
Accession Number: 20200327–5320.
Comments Due: 5 p.m. ET 4/3/20.

Docket Numbers: ER20–1420–000.
Applicants: PJM Interconnection, L.L.C.
Description: § 205(d) Rate Filing: Amendment to Original WMPA No. 5498; Queue No. AE1–074 to be effective 10/14/2019.
Filed Date: 3/30/20.
Accession Number: 20200330–5176.
Comments Due: 5 p.m. ET 4/20/20.

Docket Numbers: ER20–1421–000.
Applicants: Southwest Power Pool, Inc.
Description: § 205(d) Rate Filing: 3125R8 Basin Electric Power Cooperative NITSA and NOA to be effective 3/1/2020.
Filed Date: 3/30/20.
Accession Number: 20200330–5177.
Comments Due: 5 p.m. ET 4/20/20.

The filings are accessible in the Commission's eLibrary system by clicking on the links or querying the docket number.

Any person desiring to intervene or protest in any of the above proceedings must file in accordance with Rules 211 and 214 of the Commission's Regulations (18 CFR 385.211 and 385.214) on or before 5:00 p.m. Eastern time on the specified comment date. Protests may be considered, but intervention is necessary to become a party to the proceeding.

eFiling is encouraged. More detailed information relating to filing requirements, interventions, protests, service, and qualifying facilities filings can be found at: *http://www.ferc.gov/docs-filing/efiling/filing-req.pdf.* For other information, call (866) 208–3676 (toll free). For TTY, call (202) 502–8659.

Dated: March 30, 2020.

Nathaniel J. Davis, Sr.,

Deputy Secretary.

[FR Doc. 2020–07019 Filed 4–2–20; 8:45 am]

BILLING CODE 6717–01–P

DEPARTMENT OF ENERGY

Federal Energy Regulatory Commission

[Project No. 14862–001]

Douglas Leen; Notice of Availability of Environmental Assessment

In accordance with the National Environmental Policy Act of 1969 and the Federal Energy Regulatory Commission's regulations, 18 CFR part 380, the Office of Energy Projects has reviewed the application for exemption from licensing for the Kupreanof Microhydro Project, to be located on an unnamed stream in Petersburg Borough, Alaska, and has prepared an Environmental Assessment (EA). The project would occupy 0.651 acre of federal land in the Tongass National Forest, managed by the U.S. Department of Agriculture's Forest Service.

In the EA, Commission staff analyzes the potential environmental effects of the project and concludes that issuing an exemption for the project, with appropriate environmental measures, would not constitute a major federal action significantly affecting the quality of the human environment.

The Commission provides all interested persons an opportunity to view and/or print the EA via the internet through the Commission's Home Page (*http://www.ferc.gov*) using the ''eLibrary'' link. Enter the docket number, excluding the last three digits in the docket number field, to access the document. At this time, the Commission has suspended access to Commission's Public Reference Room, due to the proclamation declaring a National Emergency concerning the Novel Coronavirus Disease (COVID–19), issued by the President on March 13, 2020. For assistance, contact FERC Online Support at *FERCOnlineSupport@ferc.gov* or toll-free at (866)–208–3676, or for TTY, (202) 502–8659. You may also register online at *http://www.ferc.gov/docs-filing/esubscription.asp* to be notified via email of new filings and issuances related to this or other pending projects. For assistance, contact FERC Online Support.

Any comments should be filed within 30 days from the date of this notice.

The Commission strongly encourages electronic filing. Please file comments using the Commission's eFiling system at *http://www.ferc.gov/docs-filing/efiling.asp.* Commenters can submit brief comments up to 6,000 characters, without prior registration, using the eComment system at *http://www.ferc.gov/docs-filing/ecomment.asp.* You must include your name and contact information at the end of your comments. For assistance, please contact FERC Online Support. In lieu of electronic filing, please send a paper copy to: Secretary, Federal Energy Regulatory Commission, 888 First Street NE, Washington, DC 20426. The first page of any filing should include docket number P–14862–001.

For further information, contact John Matkowski at (202) 502–8576 or *john.matkowski@ferc.gov.*

Dated: March 30, 2020.

Kimberly D. Bose,

Secretary.

[FR Doc. 2020–06997 Filed 4–2–20; 8:45 am]

BILLING CODE 6717–01–P

ENVIRONMENTAL PROTECTION AGENCY

[EPA–HQ–OPP–2020–0144; FRL–10007–08]

Notice of Receipt of Requests To Voluntarily Cancel Certain Pesticide Registrations

AGENCY: Environmental Protection Agency (EPA).

ACTION: Notice.

SUMMARY: In accordance with the Federal Insecticide, Fungicide, and Rodenticide Act (FIFRA), EPA is issuing a notice of receipt of requests by registrants to voluntarily cancel certain pesticide registrations. EPA intends to grant these requests at the close of the comment period for this announcement unless the Agency receives substantive comments within the comment period that would merit its further review of the requests, or unless the registrants withdraw its requests. If these requests are granted, any sale, distribution, or use of products listed in this notice will be permitted after the registrations have been cancelled only if such sale, distribution, or use is consistent with the terms as described in the final order.

DATES: Comments must be received on or before September 30, 2020.

ADDRESSES: Submit your comments, identified by docket identification (ID) number EPA–HQ–OPP–2020–0144, by one of the following methods:

Federal eRulemaking Portal: http://www.regulations.gov. Follow the online instructions for submitting comments. Do not submit electronically any information you consider to be Confidential Business Information (CBI) or other information whose disclosure is restricted by statute.

Mail: OPP Docket, Environmental Protection Agency Docket Center (EPA/DC), (28221T), 1200 Pennsylvania Ave. NW, Washington, DC 20460–0001.

Submit written withdrawal request by mail to: Information Technology and Resources Management Division (7502P), Office of Pesticide Programs, Environmental Protection Agency, 1200 Pennsylvania Ave. NW, Washington, DC 20460–0001. ATTN: Christopher Green.

Hand Delivery: To make special arrangements for hand delivery or delivery of boxed information, please follow the instructions at *http://www.epa.gov/dockets/contacts.html.* Additional instructions on commenting or visiting the docket, along with more information about dockets generally, is available at *http://www.epa.gov/dockets.*

FOR FURTHER INFORMATION CONTACT: Christopher Green, Information Technology and Resources Management Division (7502P), Office of Pesticide Programs, Environmental Protection Agency, 1200 Pennsylvania Ave. NW, Washington, DC 20460–0001; telephone number: (703) 347–0367; email address: *green.christopher@epa.gov.*

SUPPLEMENTARY INFORMATION:

I. General Information

A. Does this action apply to me?

This action is directed to the public in general and may be of interest to a wide range of stakeholders including environmental, human health, and agricultural advocates; the chemical industry; pesticide users; and members of the public interested in the sale, distribution, or use of pesticides.

B. What should I consider as I prepare my comments for EPA?

1. *Submitting CBI.* Do not submit this information to EPA through *regulations.gov* or email. Clearly mark the part or all of the information that you claim to be CBI. For CBI information in a disk or CD–ROM that you mail to EPA, mark the outside of the disk or CD–ROM as CBI and then identify electronically within the disk or

CD–ROM the specific information that is claimed as CBI. In addition to one complete version of the comment that includes information claimed as CBI, a copy of the comment that does not contain the information claimed as CBI must be submitted for inclusion in the public docket. Information so marked will not be disclosed except in accordance with procedures set forth in 40 CFR part 2.

2. *Tips for preparing your comments.* When preparing and submitting your comments, see the commenting tips at *http://www.epa.gov/dockets/comments.html.*

II. What action is the Agency taking?

This notice announces receipt by EPA of requests from registrants to cancel certain pesticide products. registered under FIFRA section 3 (7 U.S.C. 136a) or 24(c) (7 U.S.C. 136v(c)). The affected products and the registrants making the requests are identified in Tables 1and 2 of this unit.

Unless a request is withdrawn by the registrant or if the Agency determines that there are substantive comments that warrant further review of this request, EPA intends to issue an order in the **Federal Register** canceling the affected registrations.

TABLE 1—PRODUCT REGISTRATIONS WITH PENDING REQUESTS FOR CANCELLATION

Registration No.	Company No.	Product name	Active ingredients
70488–1	70488	Phonewipe	Benzenemethanaminium, N,N-dimethyl-N-(2-(2-(4-(1,1,3,3-tetramethylbutyl)phenoxy)ethoxy)ethyl)-, chloride.
82544–1	82544	Silver Assembly with Washing Machine	Silver.
82544–2	82544	Silver Assembly	Silver.

Table 2 of this unit includes the names and addresses of record for all registrants of the products in Table 1 of this unit, in sequence by EPA company number. This number corresponds to the first part of the EPA registration numbers of the products listed in Table 1 of this unit.

TABLE 2—REGISTRANTS REQUESTING VOLUNTARY CANCELLATION

EPA company No.	Company name and address
70488	Advantus Corp., 12276 San Jose Blvd., Bldg. 618, Jacksonville, FL 32223.
82544	Samsung Electronics Co., Ltd. Agent Name: Keller And Heckman, LLP, 1001 G Street NW, Suite 500 West, Washington, DC 20001.

III. What is the Agency's authority for taking this action?

Section 6(f)(1) of FIFRA (7 U.S.C. 136d(f)(1)) provides that a registrant of a pesticide product may at any time request that any of its pesticide registrations be canceled or amended to terminate one or more uses. FIFRA further provides that, before acting on the request, EPA must publish a notice of receipt of any such request in the **Federal Register**.

Section 6(f)(1)(B) of FIFRA (7 U.S.C. 136d(f)(1)(B)) requires that before acting on a request for voluntary cancellation, EPA must provide a 30-day public comment period on the request for voluntary cancellation or use termination. In addition, FIFRA section 6(f)(1)(C) (7 U.S.C. 136d(f)(1)(C)) requires that EPA provide a 180-day comment period on a request for voluntary cancellation or termination of any minor agricultural use before granting the request, unless:

1. The registrants request a waiver of the comment period, or

2. The EPA Administrator determines that continued use of the pesticide would pose an unreasonable adverse effect on the environment.

The registrants listed in Table 2 of Unit II have not requested that EPA waive the 180-day comment period. Accordingly, EPA will provide a 180-day comment period on the proposed requests.

IV. Procedures for Withdrawal of Request

Registrants who choose to withdraw a request for product cancellation should submit the withdrawal in writing to the person listed under **FOR FURTHER INFORMATION CONTACT**. If the products have been subject to a previous cancellation action, the effective date of cancellation and all other provisions of any earlier cancellation action are controlling.

V. Provisions for Disposition of Existing Stocks

Existing stocks are those stocks of registered pesticide products that are currently in the United States and that were packaged, labeled, and released for shipment prior to the effective date of the cancellation action.

In any order issued in response to these requests for cancellation of product registrations EPA proposes to include the following provisions for the treatment of any existing stocks of the products listed in Table 1 of Unit II.

For voluntary product cancellations, registrants will be permitted to sell and distribute existing stocks of voluntarily canceled products for 1 year after the effective date of the cancellation, which will be the date of publication of the cancellation order in the **Federal Register**. Thereafter, registrants will be prohibited from selling or distributing the products identified in Table 1 of Unit II., except for export consistent with FIFRA section 17 (7 U.S.C. 136o) or for proper disposal.

Persons other than the registrant may sell, distribute, or use existing stocks of canceled products until supplies are exhausted, provided that such sale, distribution, or use is consistent with the terms of the previously approved labeling on, or that accompanied, the canceled products.

Authority: 7 U.S.C. 136 *et seq.*

Dated: March 26, 2020.

Delores Barber,

Director, Information Technology and Resources Management Division, Office of Pesticide Programs.

[FR Doc. 2020–07038 Filed 4–2–20; 8:45 am]

BILLING CODE 6560–50–P

ENVIRONMENTAL PROTECTION AGENCY

[EPA–HQ–OPP–2020–0052; FRL–10006–56]

Pesticide Product Registration; Receipt of Applications for New Uses

AGENCY: Environmental Protection Agency (EPA).

ACTION: Notice.

SUMMARY: EPA has received applications to register new uses for pesticide products containing currently registered active ingredients. Pursuant to the Federal Insecticide, Fungicide, and Rodenticide Act (FIFRA), EPA is hereby providing notice of receipt and opportunity to comment on these applications.

DATES: Comments must be received on or before May 4, 2020.

ADDRESSES: Submit your comments, identified by the docket identification (ID) number and the File Symbol of the EPA Registration Number of interest as shown in the body of this document, by one of the following methods:

- *Federal eRulemaking Portal: http://www.regulations.gov.* Follow the online instructions for submitting comments. Do not submit electronically any information you consider to be Confidential Business Information (CBI) or other information whose disclosure is restricted by statute.
- *Mail:* OPP Docket, Environmental Protection Agency Docket Center (EPA/DC), (28221T), 1200 Pennsylvania Ave. NW, Washington, DC 20460–0001.
- *Hand Delivery:* To make special arrangements for hand delivery or delivery of boxed information, please follow the instructions at *https://www.epa.gov/dockets/where-send-comments-epa-dockets.*

Additional instructions on commenting or visiting the docket, along with more information about dockets generally, is available at *https://www.epa.gov/dockets/about-epa-dockets.*

FOR FURTHER INFORMATION CONTACT: Michael Goodis, Registration Division (7505P), main telephone number: (703) 305–7090, email address: *RDFRNotices@epa.gov.* The mailing address for each contact person is: Office of Pesticide Programs, Environmental Protection Agency, 1200 Pennsylvania Ave. NW, Washington, DC 20460–0001. As part of the mailing address, include the contact person's name, division, and mail code. The division to contact is listed at the end of each application summary.

SUPPLEMENTARY INFORMATION:

I. General Information

A. Does this action apply to me?

You may be potentially affected by this action if you are an agricultural producer, food manufacturer, or pesticide manufacturer. The following list of North American Industrial Classification System (NAICS) codes is not intended to be exhaustive, but rather provides a guide to help readers determine whether this document applies to them. Potentially affected entities may include:

- Crop production (NAICS code 111).
- Animal production (NAICS code 112).
- Food manufacturing (NAICS code 311).

B. What should I consider as I prepare my comments for EPA?

1. *Submitting CBI.* Do not submit this information to EPA through *regulations.gov* or email. Clearly mark the part or all of the information that you claim to be CBI. For CBI information in a disk or CD–ROM that you mail to EPA, mark the outside of the disk or CD–ROM as CBI and then identify electronically within the disk or CD–ROM the specific information that is claimed as CBI. In addition to one complete version of the comment that includes information claimed as CBI, a copy of the comment that does not contain the information claimed as CBI must be submitted for inclusion in the public docket. Information so marked will not be disclosed except in accordance with procedures set forth in 40 CFR part 2.

2. *Tips for preparing your comments.* When preparing and submitting your comments, see the commenting tips at *https://www.epa.gov/dockets/commenting-epa-dockets.*

II. Registration Applications

EPA has received applications to register new uses for pesticide products containing currently registered active ingredients. Pursuant to the provisions of FIFRA section 3(c)(4) (7 U.S.C. 136a(c)(4)), EPA is hereby providing notice of receipt and opportunity to comment on these applications. Notice of receipt of these applications does not imply a decision by the Agency on these applications.

Notice of Receipt—New Uses

1. *File symbols:* 432–RARN, 432–RANO and *EPA registration numbers:* 264–1106, 264–1129. *Docket ID number:* EPA–HQ–OPP–2020–0045. *Applicant:* Bayer CropScience. 800 N Lindbergh Blvd. St. Louis, MO 63167. *Active ingredient:* Indaziflam. *Product type:* Herbicide. *Proposed uses:* Crop group 17 (Grass forage, fodder, and Hay group), Sugarcane, cane. *Contact:* RD.

2. *EPA registration number:* 5481–646 and 5481–647. *Docket ID number:* EPA–HQ–OPP–2019–0655. *Applicant:* AMVAC Chemical Corporation, 4695 MacArthur Court Suite 1200, Newport Beach, CA 92660. *Active ingredient:* Quizalofop-ethyl. *Product type:* Herbicide. *Proposed use:* Fruit, pome, group 11–10; Fruit, stone, group 12–12; Fruit, small, vine-climbing, except fuzzy kiwifruit, subgroup 13–07F; Pennycress; and Carinata; and crop group expansions for Sunflower, subgroup 20B and Cottonseed, subgroup 20C. *Contact:* RD.

3. *File symbol:* 7969–402. *Docket ID number:* EPA–HQ–OPP–2020–0068. *Applicant:* BASF Corporation, 26 Davis Drive, P.O. Box 13528, Research Triangle Park, North Carolina 27709–3528. *Active ingredient:* Mefentrifluconazole. *Product type:* Fungicide. *Proposed uses:* Berries, Bulb vegetables, Cucurbit vegetables, Cotton, Fruiting vegetables, Grasses, Grass grown for seed, Non-grass forages, Leafy vegetables, Root and tuber vegetables, Oilseeds, and Sugarcane. *Contact:* RD.

4. *File symbol:* 7969–406. *Docket ID number:* EPA–HQ–OPP–2020–0068. *Applicant:* BASF Corporation, 26 Davis Drive, P.O. Box 13528, Research Triangle Park, North Carolina 27709–3528. *Active ingredients:* Mefentrifluconazole, Pyraclostrobin, and Fluxapyroxad. *Product type:* Fungicide. *Proposed uses:* Cotton, Fruiting vegetables, Grasses, Grass grown for seed, Non-grass forages, Oilseeds, and Sugarcane. *Contact:* RD.

5. *File symbol:* 7969–407. *Docket ID number:* EPA–HQ–OPP–2020–0068. *Applicant:* BASF Corporation, 26 Davis Drive, P.O. Box 13528, Research Triangle Park, North Carolina 27709–3528. *Active ingredient:* Mefentrifluconazole. *Product type:* Fungicide. *Proposed uses:* Berries, Bulb vegetables, Carrot, Cucurbit vegetables, Fruiting vegetables, Leafy vegetables and Strawberry. *Contact:* RD.

6. *File symbol:* 7969–408. *Docket ID number:* EPA–HQ–OPP–2020–0068. *Applicant:* BASF Corporation, 26 Davis Drive, P.O. Box 13528, Research Triangle Park, North Carolina 27709–3528. *Active ingredient:* Mefentrifluconazole. *Product type:* Fungicide. *Proposed uses:* Cotton, Grasses, Grass grown for seed, Non-grass forages, Oilseeds, and Sugarcane. *Contact:* RD.

7. *File symbol:* 7969–409. *Docket ID number:* EPA–HQ–OPP–2020–0068. *Applicant:* BASF Corporation, 26 Davis Drive, P.O. Box 13528, Research Triangle Park, North Carolina 27709–3528. *Active ingredients:* Mefentrifluconazole and Pyraclostrobin. *Product type:* Fungicide. *Proposed uses:* Fruiting vegetables, Grasses, Grass grown for seed, Non-grass forages, Oilseeds, and Sugarcane. *Contact:* RD.

8. *File symbol:* 7969–410. *Docket ID number:* EPA–HQ–OPP–2020–0068. *Applicant:* BASF Corporation, 26 Davis Drive, P.O. Box 13528, Research Triangle Park, North Carolina 27709–3528. *Active ingredients:* Mefentrifluconazole and Fluxapyroxad. *Product type:* Fungicide. *Proposed uses:* Berries, Bulb vegetables, Carrot, Fruiting vegetables, Grape, Leafy vegetables and Strawberry. *Contact:* RD.

9. *File symbol:* 7969–411. *Docket ID number:* EPA–HQ–OPP–2020–0068.

Applicant: BASF Corporation, 26 Davis Drive, P.O. Box 13528, Research Triangle Park, North Carolina 27709–3528. *Active ingredients:* Mefentrifluconazole, Pyraclostrobin, and Fluxapyroxad. *Product type:* Fungicide. *Proposed uses:* Cotton, Fruiting vegetables, Grasses, Grass grown for seed, Non-grass forages, Oilseeds, and Sugarcane. *Contact:* RD.

10. *File symbol:* 66222–EIT. *Docket ID number:* EPA–HQ–OPP–2020–0118. *Applicant:* Makhteshim Agan of North America, Inc., 3120 Highwoods Blvd., Suite 100, Raleigh, NC 27604. *Active ingredient:* Fluensulfone. *Product type:* Nematicide. *Proposed use:* Soybeans. *Contact:* RD

11. *EPA registration numbers:* 71711–30, 71711–31, 71711–36. *Docket ID number:* EPA–HQ–OPP–2020–0067. *Applicant:* Nichino America, Inc., 4550 Linden Hill Road, Suite 501, Wilmington, DE 19808. *Active ingredient:* Tolfenpyrad. *Product type:* Insecticide, Fungicide. *Proposed use:* Artichoke, globe. *Contact:* RD.

12. *EPA registration numbers:* 71711–37; 71711–38. *Docket ID number:* EPA–HQ–OPP–2020–0100. *Applicant:* Nichino America, Inc., 4550 Linden Hill Road, Suite 501, Wilmington, DE 19808. *Active ingredient:* Pyrifluquinazon. *Product type:* Insecticide. *Proposed uses:* Ornamental outdoor uses including residential areas. *Contact:* RD.

13. *EPA registration numbers:* 71711–4, 71711–18, 71711–19, 71711–40. *Docket ID number:* EPA–HQ–OPP–2019–0386. *Applicant:* Nichino America, Inc., 4550 Linden Hill Rd, Suite 501, Wilmington, DE 19808. *Active ingredient:* Fenpyroximate. *Product type:* Insecticide. *Proposed uses:* Peanut; Peanut, hay; and Tropical and subtropical, medium to large fruit, smooth, inedible peel subgroup 24B, except banana. *Contact:* RD.

Authority: 7 U.S.C. 136 *et seq.*

Dated: March 24, 2020.

Delores Barber,

Director, Information Technology and Resources Management Division, Office of Pesticide Programs.

[FR Doc. 2020–07042 Filed 4–2–20; 8:45 am]

BILLING CODE 6560–50–P

ENVIRONMENTAL PROTECTION AGENCY

[EPA–HQ–OPPT–2019–0501; FRL–10006–93]

Asbestos; Draft Toxic Substances Control Act (TSCA) Risk Evaluation and TSCA Science Advisory Committee on Chemicals (SACC) Meetings; Notice of Availability, Public Meetings, and Request for Comment

AGENCY: Environmental Protection Agency (EPA).

ACTION: Notice.

SUMMARY: EPA is announcing the availability of and soliciting public comment on the draft Toxic Substances Control Act (TSCA) risk evaluation of asbestos. EPA is also submitting the same document to the TSCA Science Advisory Committee on Chemicals (SACC) for peer review and is announcing that there will be two virtual public meetings of the TSCA SACC, with participation by phone and webcast only, and no in-person gathering. The first virtual public meeting will be a preparatory meeting for the SACC to consider the scope and clarity of the draft charge questions for the peer review. This will be followed by the peer review virtual public meeting for the SACC to consider and review the draft risk evaluation. The purpose of conducting risk evaluations under TSCA is to determine whether a chemical substance presents an unreasonable risk of injury to health or the environment under the conditions of use, including an unreasonable risk to a relevant potentially exposed or susceptible subpopulation.

DATES:

Preparatory Virtual Meeting: Will be held on April 7, 2020, from 1:00 p.m. to approximately 4:00 p.m. (EDT). You must register online on or before April 7, 2020, to receive the webcast meeting link and audio teleconference information. Submit your comments for the preparatory virtual meeting, or request time to present oral comments, on or before noon, April 3, 2020.

Peer Review and Public Virtual Meeting: Will be held on April 27–30, 2020, from 10:00 a.m. to approximately 5:00 p.m. (EDT) (as needed, updated times for each day may be provided in the meeting agenda that will be posted in the docket at *http://www.regulations.gov* and the TSCA SACC website at *http://www.epa.gov/tsca-peer-review*). You must register online to receive the webcast meeting link and audio teleconference information. To make oral comments during the peer review virtual public meeting, please register by noon on April 22, 2020, to be included on the meeting agenda. Any written comments submitted on the draft risk evaluation on or before April 22, 2020, will be provided to the TSCA SACC committee for their consideration before the meeting. Comments received after April 22, 2020, and prior to the oral public comment period during the meeting will be available to the SACC for their consideration during the meeting. All comments received by the end of the comment period will be considered by EPA.

Comments: All comments on the draft risk evaluation must be received on or before June 2, 2020. For additional instructions, see Unit III. of the **SUPPLEMENTARY INFORMATION**.

ADDRESSES: *Virtual Meetings:* Please visit *http://www.epa.gov/tsca-peer-review* to register. You must register online to receive the webcast meeting link and audio teleconference information for participation.

Comments: Submit your comments, identified by docket identification (ID) number EPA–HQ–OPPT–2019–0501, by one of the following methods:

- *Federal eRulemaking Portal: http://www.regulations.gov.* Follow the online instructions for submitting comments. Do not submit electronically any information you consider to be Confidential Business Information (CBI) or other information whose disclosure is restricted by statute.
- *Mail:* OPPT Docket, Environmental Protection Agency Docket Center (EPA/DC), (28221T), 1200 Pennsylvania Ave. NW, Washington, DC 20460–0001.
- *Hand Delivery:* To make special arrangements for hand delivery or delivery of boxed information, please follow the instructions at *http://www.epa.gov/dockets/contacts.html.*

Additional instructions on commenting or visiting the docket, along with more information about dockets generally, is available at *http://www.epa.gov/dockets.*

Requests to present oral comments and requests for special accommodations: Submit requests for special accommodations, or requests to present oral comments during the virtual meetings to the Designated Federal Official (DFO) listed under **FOR FURTHER INFORMATION CONTACT** by the deadline identified in the **DATES** section.

FOR FURTHER INFORMATION CONTACT: *TSCA SACC:* Diana Wong, DFO, Office of Science Coordination and Policy (7201M), Environmental Protection Agency, 1200 Pennsylvania Ave. NW, Washington, DC 20460–0001; telephone number: (202) 564–2049; email address: *wong.diana-m@epa.gov.*

Draft Risk Evaluation: Dr. Stan Barone, Office of Pollution Prevention and Toxics (7403M), Environmental Protection Agency, 1200 Pennsylvania Ave. NW, Washington, DC 20460–0001; telephone number: (202) 564–1169; email address: *barone.stan@epa.gov.*

SUPPLEMENTARY INFORMATION:

I. General Information

A. Does this action apply to me?

This action is directed to the public in general. This action may be of interest to persons who are or may be required to conduct testing and those interested in risk evaluations of chemical substances under TSCA, 15 U.S.C. 2601 *et seq.* Since other entities may also be interested in this draft risk evaluation, the EPA has not attempted to describe all the specific entities that may be affected by this action.

B. What is EPA's authority for taking this action?

TSCA section 6, 15 U.S.C. 2605, requires EPA to conduct risk evaluations to ''determine whether a chemical substance presents an unreasonable risk of injury to health or the environment, without consideration of costs or other nonrisk factors, including an unreasonable risk to a potentially exposed or susceptible subpopulation identified as relevant to the risk evaluation by the Administrator, under the conditions of use.'' 15 U.S.C. 2605(b)(4)(A). TSCA sections 6(b)(4)(A) through (H) enumerate the deadlines and minimum requirements applicable to this process, including provisions that provide instruction on chemical substances that must undergo evaluation, the minimum components of a TSCA risk evaluation, and the timelines for public comment and completion of the risk evaluation. TSCA also requires that EPA operate in a manner that is consistent with the best available science, make decisions based on the weight of the scientific evidence and consider reasonably available information. 15 U.S.C. 2625(h), (i), and (k).

The statute identifies the minimum components for all chemical substance risk evaluations. For each risk evaluation, EPA must publish a document that outlines the scope of the risk evaluation to be conducted, which includes the hazards, exposures, conditions of use, and the potentially exposed or susceptible subpopulations that EPA expects to consider. 15 U.S.C. 2605(b)(4)(D). The statute further provides that each risk evaluation must also: (1) Integrate and assess available information on hazards and exposures for the conditions of use of the chemical substance, including information that is relevant to specific risks of injury to health or the environment and information on relevant potentially exposed or susceptible subpopulations; (2) describe whether aggregate or sentinel exposures were considered and the basis for that consideration; (3) take into account, where relevant, the likely duration, intensity, frequency, and number of exposures under the conditions of use; and (4) describe the weight of the scientific evidence for the identified hazards and exposures. 15 U.S.C. 2605(b)(4)(F)(i)–(ii) and (iv)–(v). Each risk evaluation must not consider costs or other nonrisk factors. 15 U.S.C. 2605(b)(4)(F)(iii).

The statute requires that the risk evaluation process last no longer than three years, with a possible additional six-month extension. 15 U.S.C. 2605(b)(4)(G). The statute also requires that the EPA allow for no less than a 30-day public comment period on the draft risk evaluation, prior to publishing a final risk evaluation. 15 U.S.C. 2605(b)(4)(H).

C. What action is EPA taking?

EPA is announcing the availability of and seeking public comment on the draft risk evaluation of the chemical substance identified in Unit II. EPA is seeking public comment on all aspects of the draft risk evaluation, including any preliminary conclusions, findings, and determinations, and the submission of any additional information that might be relevant to the draft risk evaluation, including the science underlying the risk evaluation and the outcome of the systematic review associated with the chemical substance. This 60-day comment period on the draft risk evaluation satisfies TSCA section 6(b)(4)(H), which requires EPA to ''provide no less than 30 days public notice and an opportunity for comment on a draft risk evaluation prior to publishing a final risk evaluation'' and 40 CFR 702.49(a), which states that ''EPA will publish a draft risk evaluation in the **Federal Register**, open a docket to facilitate receipt of public comment, and provide no less than a 60-day comment period, during which time the public may submit comment on EPA's draft risk evaluation.'' In addition to any new comments on the draft risk evaluation, the public should resubmit or clearly identify any previously filed comments, modified as appropriate, that are relevant to the draft risk evaluation and that the submitter feels have not been addressed. EPA does not intend to respond to comments submitted prior to the release of the draft risk evaluation unless they are clearly identified in comments on the draft risk evaluation.

EPA is also submitting the draft risk evaluation and associated supported documents to the TSCA SACC for peer review and announcing the meeting for the peer review panel. All comments submitted to the docket on the draft risk evaluation by the deadline identified in the **DATES** section will be provided for consideration to the TSCA SACC peer review panel, which will have the opportunity to consider the comments during its discussions.

D. What should I consider as I prepare my comments for EPA?

1. *Submitting CBI.* Do not submit this information to EPA through regulations.gov or email. Clearly mark the part or all of the information that you claim to be CBI. For CBI information in a disk or CD–ROM that you mail to EPA, mark the outside of the disk or CD–ROM as CBI and then identify electronically within the disk or CD–ROM the specific information that is claimed CBI. In addition to one complete version of the comment that includes information claimed as CBI, a copy of the comment that does not contain the information claimed as CBI must be submitted for inclusion in the public docket. Information so marked will not be disclosed except in accordance with procedures set forth in 40 CFR part 2.

2. *Tips for preparing your comments.* When preparing and submitting your comments, see the commenting tips at *http://www.epa.gov/dockets/comments.html.*

II. Draft TSCA Risk Evaluation

A. What is EPA's risk evaluation process for existing chemicals under TSCA?

The risk evaluation process is the second step in EPA's existing chemical process under TSCA, following prioritization and before risk management. As this chemical is part of the first ten chemical substances undergoing risk evaluation, the chemical substance was not required to go through prioritization (81 FR 91927, December 19, 2016) (FRL–9956–47). The purpose of conducting risk evaluations is to determine whether a chemical substance presents an unreasonable risk of injury to health or the environment, under the conditions of use, including an unreasonable risk to a relevant potentially exposed or susceptible subpopulation. As part of this process, EPA must evaluate both hazard and exposure, not consider costs or other nonrisk factors, use reasonably available information and approaches in a

manner that is consistent with the requirements in TSCA for the use of the best available science, and ensure decisions are based on the weight-of-scientific-evidence.

The specific risk evaluation process that EPA has established by rule to implement the statutory process is set out in 40 CFR part 702 and summarized on EPA's website at *http://www.epa.gov/assessing-and-managing-chemicals-under-tsca/risk-evaluations-existing-chemicals-under-tsca.* As explained in the preamble to EPA's final rule on procedures for risk evaluation (82 FR 33726, July 20, 2017) (FRL–9964–38), the specific regulatory process set out in 40 CFR part 702, subpart B will be followed for the first ten chemical substances undergoing risk evaluation to the maximum extent practicable.

B. What is asbestos?

Although there are several known types of asbestos, the only form of asbestos known to be imported, processed, or distributed for use in the United States at the posting of this draft risk evaluation is chrysotile. Raw chrysotile asbestos currently imported into the U.S. is used exclusively by the chlor-alkali industry. Based on 2019 data, the total amount of raw asbestos imported into the U.S. was 750 metric tons. EPA has also identified the importation of asbestos-containing products; however, the import volumes of those products are not fully known. The asbestos-containing products that EPA has identified as being imported and used are sheet gaskets, brake blocks, aftermarket automotive brakes/linings, other vehicle friction products, and other gaskets.

EPA evaluated the following categories of conditions of use of chrysotile asbestos in this draft risk evaluation: Manufacturing; processing; distribution in commerce; occupational and consumer uses; and disposal. EPA continues to review the recent court decision in *Safer Chemicals Healthy Families* v. *EPA,* Nos. 17–72260 *et al.* (9th Cir. 2019), and this draft risk evaluation does not reflect consideration of any legacy uses and associated disposal for chrysotile asbestos or other asbestos fiber types as a result of that decision. EPA is still seeking public comment on and peer review of this version, however. EPA intends to consider legacy uses and associated disposal in a supplemental scope document and supplemental risk evaluation.

Information about the problem formulation and scope phases of the TSCA risk evaluation for this chemical is available at *https://www.epa.gov/assessing-and-managing-chemicals-under-tsca/risk-evaluation-asbestos-0.*

III. TSCA SACC

A. What is the purpose of the TSCA SACC?

The TSCA SACC was established by EPA in 2016 and operates in accordance with the Federal Advisory Committee Act (FACA), 5 U.S.C. Appendix 2 *et seq.* The TSCA SACC provides expert independent scientific advice and consultation to the EPA on the scientific and technical aspects of risk assessments, methodologies, and pollution prevention measures and approaches for chemicals regulated under TSCA.

The TSCA SACC is comprised of experts in: Toxicology; human health and environmental risk assessment; exposure assessment; and related sciences (*e.g.,* synthetic biology, pharmacology, biotechnology, nanotechnology, biochemistry, biostatistics, physiologically based pharmacokinetic modelling (PBPK) modeling, computational toxicology, epidemiology, environmental fate, and environmental engineering and sustainability). When needed, the committee will be assisted in their reviews by ad hoc participants with specific expertise in the topics under consideration.

B. How can I access the TSCA SACC documents?

EPA's background documents, related supporting materials, and draft charge questions to the TSCA SACC are available on the TSCA SACC website and in the docket established for the specific chemical substance. In addition, EPA will provide additional background documents (*e.g.,* TSCA SACC members participating in this meeting and the meeting agenda) as the materials become available. You may obtain electronic copies of these documents, and certain other related documents that might be available, in the docket at *http://www.regulations.gov* and the TSCA SACC website at *http://www.epa.gov/tsca-peer-review.*

After the public meeting, the TSCA SACC will prepare meeting minutes summarizing its recommendations to the EPA. The meeting minutes will be posted on the TSCA SACC website and in the relevant docket.

C. What do I need to know about the TSCA SACC public meetings?

The focus of the public meetings is to peer review EPA's draft risk evaluation. After the peer review process, EPA will consider peer reviewer comments and recommendations and public comments, in finalizing the risk evaluation. The draft risk evaluation contains: Discussion of chemistry and physical-chemical properties; characterization of conditions of use; environmental fate and transport assessment; human health exposures; environmental hazard assessment; risk characterization; risk determination; and a detailed description of the systematic review process developed by the Office of Pollution Prevention and Toxics to search, screen, and evaluate scientific literature for use in the risk evaluation process.

D. How do I participate in the public meetings?

You may participate in the public meetings by following the instructions in this unit. To ensure proper receipt by EPA, it is imperative that you identify the corresponding docket ID number in the subject line on the first page of your request.

1. *Preparatory virtual meeting.* The preparatory virtual meeting will be conducted via webcast and telephone. You may participate in the preparatory virtual meeting by registering to join the webcast. You may also submit written or oral comments.

i. *Registration.* You must register to participate in the preparatory virtual meeting. To participate by listening or making a comment during this meeting, please go to the EPA website to register: *http://www.epa.gov/tsca-peer-review.* Registration online will be confirmed by an email that will include the webcast meeting link and audio teleconference information.

ii. *Written comments.* Written comments for consideration during the preparatory virtual meeting should be submitted, using the instructions in **ADDRESSES** and this unit, on or before the date set in the **DATES** section.

iii. *Oral comments.* Requests to make brief oral comments to the TSCA SACC during the preparatory virtual meeting should be submitted when registering online or with the DFO listed under **FOR FURTHER INFORMATION CONTACT** on or before noon on the date set in the **DATES** section. Oral comments before the TSCA SACC during the preparatory virtual meeting are limited to approximately 5 minutes due to the time constraints of this virtual meeting.

2. *Peer review virtual meeting.* The peer review virtual meeting will be conducted via webcast and telephone. You may participate in the peer review virtual meeting by registering to join the webcast. You may also submit written or oral comments.

i. Registration. You must register to participate in the peer review virtual meeting. To participate by listening or making a comment during this meeting, please go to the EPA website to register: *http://www.epa.gov/tsca-peer-review.* Registration online will be confirmed by an email that will include the webcast meeting link and audio teleconference information.

ii. Written comments. To provide the TSCA SACC the time necessary to consider and review your comments, written comments for consideration during the peer review virtual meeting should be submitted, using the instructions in **ADDRESSES** and this unit, on or before the date set in the **DATES** section. Comments received after the date set in the **DATES** section and prior to the end of the oral public comment period during the meeting will still be provided to the TSCA SACC for their consideration.

iii. Oral comments. To be included on the meeting agenda, requests to make brief oral comments to the TSCA SACC during the peer review virtual meeting should be submitted when registering online or with the DFO listed under **FOR FURTHER INFORMATION CONTACT** on or before noon on the date set in the **DATES** section. The request should identify the name of the individual making the presentation, and the organization (if any) the individual will represent. Oral comments before the TSCA SACC during the peer review virtual meeting are limited to approximately 5 minutes. In addition, each speaker should email their comments and presentation to the DFO listed under **FOR FURTHER INFORMATION CONTACT**, preferably, at least 24 hours prior to the oral public comment period.

(Authority: 15 U.S.C. 2601 *et seq.*)

Andrew Wheeler,

Administrator.

[FR Doc. 2020–06973 Filed 4–2–20; 8:45 am]

BILLING CODE 6560–50–P

ENVIRONMENTAL PROTECTION AGENCY

[ER–FRL–9050–2]

Environmental Impact Statements; Notice of Availability

Responsible Agency: Office of Federal Activities, General Information 202–564–5632 or *https://www.epa.gov/nepa.*

Weekly receipt of Environmental Impact Statements (EIS)

Filed March 23, 2020, 10 a.m. EST

Through March 30, 2020, 10 a.m. EST

Pursuant to 40 CFR 1506.9.

Section 309(a) of the Clean Air Act requires that EPA make public its comments on EISs issued by other Federal agencies. EPA's comment letters on EISs are available at: *https://cdxnodengn.epa.gov/cdx-enepa-public/action/eis/search.*

EIS No. 20200075, Final, Caltrans, CA, North County Corridor New State Route 108 Project and Route Adoption, Review Period Ends: 05/04/2020, Contact: Jennifer Lugo 559–445–6172.

EIS No. 20200076, Draft, BLM, PRO, Draft Programmatic Environmental Impact Statement for Fuels Reduction and Rangeland Restoration in the Great Basin, Comment Period Ends: 06/02/2020, Contact: Ammon Wilhelm 208–373–3824.

EIS No. 20200077, Draft, NNSA, SC, Plutonium Pit Production at the Savannah River Site in South Carolina, Comment Period Ends: 05/18/2020, Contact: Jennifer Nelson 803–208–1426.

EIS No. 20200078, Final, BLM, ID, Tri-State Fuel Breaks Project, Review Period Ends: 05/04/2020, Contact: Lance Okeson 208–384–3300.

Dated: March 30, 2020.

Cindy S. Barger,

Director, NEPA Compliance Division, Office of Federal Activities.

[FR Doc. 2020–06995 Filed 4–2–20; 8:45 am]

BILLING CODE 6560–50–P

ENVIRONMENTAL PROTECTION AGENCY

[FRL–10007–37–OA]

Notification of a Public Meeting of the Science Advisory Board All-Ages Lead Model Review Panel

AGENCY: Environmental Protection Agency (EPA).

ACTION: Notice.

SUMMARY: The Environmental Protection Agency (EPA) Science Advisory Board (SAB) Staff Office announces a public teleconference of the SAB's All-Ages Lead Model (AALM) Panel to discuss its review of the EPA's All-Ages Lead Model (AALM) External Review Draft Version 2.0, comprising the model's software, technical documentation, and user manual (hereafter referred to collectively as AALM 2.0). The AALM 2.0 was developed by EPA's Office of Research and Development.

DATES: The public teleconference will be held on April 23, from 1:00 p.m. to 5:00 p.m. (Eastern Time).

ADDRESSES: The public teleconference will be conducted by telephone only.

FOR FURTHER INFORMATION CONTACT: Any member of the public who wants further information concerning this notice may contact Iris Goodman, Designated Federal Officer (DFO), EPA Science Advisory Board (1400R), U.S. Environmental Protection Agency, 1200 Pennsylvania Avenue, NW, Washington, DC 20460; via telephone/voice mail (202) 564–2164 or email at *goodman.iris@epa.gov.* General information about the SAB, as well as any updates concerning the meetings announced in this notice can be found on the SAB website at *http://www.epa.gov/sab.*

SUPPLEMENTARY INFORMATION:

Background: The SAB was established pursuant to the Environmental Research, Development, and Demonstration Authorization Act (ERDDAA), codified at 42 U.S.C. 4365, to provide independent scientific and technical advice to the EPA Administrator on the scientific and technical basis for agency positions and regulations. The SAB is a Federal Advisory Committee chartered under the Federal Advisory Committee Act (FACA), 5 U.S.C., App. 2. The SAB will comply with the provisions of FACA and all appropriate SAB Staff Office procedural policies. Pursuant to FACA and EPA policy, notice is hereby given that the SAB AALM Model Review Panel's will hold a public teleconference to discuss their draft AALM advisory report. This draft report presents the findings and recommendations from the Panel's review of the EPA's All-Ages Lead Model (AALM) External Review Draft Version 2.0, comprising the model's software, technical documentation, and user manual (hereafter referred to collectively as AALM 2.0). The AALM 2.0 was developed by EPA's Office of Research and Development. The Panel will provide its advice to the Administrator through the chartered SAB. All draft reports developed by SAB panels, committees or workgroups are reviewed and approved by the Chartered SAB through a quality review process before being finalized and transmitted to the EPA Administrator. Information on the SAB AALM Review Panel can be found at *http://epa.gov/sab.*

Availability of Meeting Materials: All meeting materials, including the agenda will be available on the SAB web page at *http://epa.gov/sab.*

Procedures for Providing Public Input: Public comment for consideration by EPA's federal advisory committees and panels has a different purpose from public comment provided to EPA

program offices. Therefore, the process for submitting comments to a federal advisory committee is different from the process used to submit comments to an EPA program office. Federal advisory committees and panels, including scientific advisory committees, provide independent advice to the EPA. Members of the public can submit relevant comments pertaining to the committee's charge or meeting materials. Input from the public to the SAB will have the most impact if it provides specific scientific or technical information or analysis for the SAB to consider or if it relates to the clarity or accuracy of the technical information. Members of the public wishing to provide comment should follow the instruction below to submit comments.

Oral Statements: In general, individuals or groups requesting an oral presentation at a public in-person meeting will be limited to three minutes. Each person making an oral statement should consider providing written comments as well as their oral statement so that the points presented orally can be expanded upon in writing. Persons interested in providing oral statements should contact Dr. Iris Goodman, DFO, in writing (preferably via email) at the contact information noted above by April 16, to be placed on the list of registered speakers.

Written Statements: Written statements will be accepted throughout the advisory process; however, for timely consideration by SAB members, statements should be received in the SAB Staff Office by (preferably via email by April 16, 2020 for consideration at the public teleconference. Written statements should be supplied to the DFO at the contact information above via email (preferred) or in hard copy with original signature. Submitters are requested to provide a signed and unsigned version of each document because the SAB Staff Office does not publish documents with signatures on its websites. Members of the public should be aware that their personal contact information, if included in any written comments, may be posted to the SAB website. Copyrighted material will not be posted without explicit permission of the copyright holder.

Accessibility: For information on access or services for individuals with disabilities, please contact the DFO, at the contact information noted above, preferably at least ten days prior to the meeting, to give the EPA as much time as possible to process your request.

V. Khanna Johnston,

Deputy Director, EPA Science Advisory Board Staff Office.

[FR Doc. 2020–06998 Filed 4–2–20; 8:45 am]

BILLING CODE 6560–50–P

FEDERAL COMMUNICATIONS COMMISSION

[OMB 3060–1256; FRS 16614]

Information Collection Being Reviewed by the Federal Communications Commission

AGENCY: Federal Communications Commission.

ACTION: Notice and request for comments.

SUMMARY: As part of its continuing effort to reduce paperwork burdens, and as required by the Paperwork Reduction Act of 1995 (PRA), the Federal Communications Commission (FCC or Commission) invites the general public and other Federal agencies to take this opportunity to comment on the following information collections. Comments are requested concerning: Whether the proposed collection of information is necessary for the proper performance of the functions of the Commission, including whether the information shall have practical utility; the accuracy of the Commission's burden estimate; ways to enhance the quality, utility, and clarity of the information collected; ways to minimize the burden of the collection of information on the respondents, including the use of automated collection techniques or other forms of information technology; and ways to further reduce the information collection burden on small business concerns with fewer than 25 employees.

The FCC may not conduct or sponsor a collection of information unless it displays a currently valid Office of Management and Budget (OMB) control number. No person shall be subject to any penalty for failing to comply with a collection of information subject to the PRA that does not display a valid OMB control number.

DATES: Written PRA comments should be submitted on or before June 2, 2020. If you anticipate that you will be submitting comments, but find it difficult to do so within the period of time allowed by this notice, you should advise the contact listed below as soon as possible.

ADDRESSES: Direct all PRA comments to Nicole Ongele, FCC, via email *PRA@fcc.gov* and to *Nicole.ongele@fcc.gov.*

FOR FURTHER INFORMATION CONTACT: For additional information about the information collection, contact Nicole Ongele, (202) 418–2991.

SUPPLEMENTARY INFORMATION:

OMB Control Number: 3060–1256.

Title: Application for Connect America Fund Phase II and Rural Digital Opportunity Fund Auction Support.

Form Number: FCC Form 683.

Type of Review: Revision of a currently approved collection.

Respondents: Business or other for-profit entities, not-for-profit institutions, and state, local or tribal governments.

Number of Respondents and Responses: 530 respondents and 1,060 responses.

Time per Response: 2—12 hours (on average).

Frequency of Response: Annual reporting requirements, on occasion reporting requirement.

Obligation to Respond: Required to obtain or retain benefits. Statutory authority for this information collection 47 U.S.C. 154, 214, 254 and 303(r) of the Communications Act of 1934, as amended.

Estimated Total Annual Burden: 7,420 hours.

Total Annual Costs: No cost.

Nature and Extent of Confidentiality: Although most information collected in FCC Form 683 will be made available for public inspection, the Commission will withhold certain information collected in FCC Form 683 from routine public inspection. Specifically, the Commission will treat certain financial and technical information submitted in FCC Form 683 as confidential. In addition, an applicant may use the abbreviated process under 47 CFR 0.459(a)(4) to request confidential treatment of the audited financial statements that are submitted during the post-selection review process. However, if a request for public inspection for this technical or financial information is made under 47 CFR 0.461, and the applicant has any objections to disclosure, the applicant will be notified and will be required to justify continued confidential treatment. To the extent that an applicant seeks to have other information collected in FCC Form 683 or during the post-selection review process withheld from public inspection, the applicant may request confidential treatment pursuant to 47 CFR 0.459.

Privacy Act Impact Assessment: No impact(s).

Needs and Uses:

Connect America Fund Phase II Auction

The Commission is requesting the Office of Management and Budget (OMB) approval for this revised information collection. On November 18, 2011, the Commission released the *USF/ICC Transformation Order and Further Notice of Proposed Rulemaking,* WC Docket No. 10–90 et al., FCC 11–161 (*USF/ICC Transformation Order and/or FNPRM*), which comprehensively reformed and modernized the high-cost program within the universal service fund to focus support on networks capable of providing voice and broadband services. Among other things, the Commission created the Connect America Fund (CAF) and concluded that support in price cap areas would be provided through a combination of ''a new forward-looking model of the cost of constructing modern multi-purpose networks'' and a competitive bidding process (CAF Phase II auction or Auction 903). The Commission also sought comment in the accompanying *USF/ICC Transformation FNPRM* on proposed rules governing the CAF Phase II auction, including basic auction design and the application process.

In the CAF Phase II auction, service providers competed to receive support of up to $1.98 billion over 10 years to offer voice and broadband service in unserved high-cost areas. The information collection requirements reported under this collection are the result of several Commission decisions to implement the reform adopted in the *USF/ICC Transformation Order* and move forward with conducting the CAF Phase II auction. In the *April 2014 Connect America Order,* WC Docket No. 10–90 et al., FCC 14–54, the Commission adopted various rules regarding participation in the CAF Phase II auction, the term of support, and the eligible telecommunications carrier (ETC) designation process. In the *Phase II Auction Order,* WC Docket No. 10–90 et al., FCC 16–64, the Commission adopted rules to govern the CAF Phase II auction, including the adoption of a two-stage application process, which includes a pre-auction short-form application to be submitted by parties interested in bidding in the CAF Phase II auction and a post-auction long-form application that must be submitted by winning bidders seeking to become authorized to receive CAF Phase II auction support. The Commission concluded, based on its experience with auctions and consistent with the record, that this two-stage application process balances the need to collect information essential to conducting a successful auction and authorizing CAF Phase II support with administrative efficiency.

On January 30, 2018, the Commission adopted a public notice that established the final procedures for the CAF Phase II auction, including the long-form application disclosure and certification requirements for winning bidders seeking to become authorized to receive CAF Phase II auction support. *See Phase II Auction Procedures Public Notice,* WC Docket No. 17–182 et al., FCC 18–6. The Commission also adopted the *Phase II Auction Order on Reconsideration,* WC Docket No. 10–90 et al., FCC 18–5, which modified the Commission's letter of credit rules to provide some additional relief for CAF Phase II auction support recipients by reducing the costs of maintaining a letter of credit.

The Commission proposes to reduce the number of respondents that are subject to this collection now that the CAF Phase II auction winning bidders have been announced.

Rural Digital Opportunity Fund Auction

On February 7, 2020 the Commission released the *Rural Digital Opportunity Fund Order,* WC Docket Nos. 19–126, 10–90, FCC 20–5 which will commit up to $20.4 billion over the next decade to support up to gigabit speed broadband networks in rural America. The funding will be allocated through a multi-round, reverse, descending clock auction that favors faster services with lower latency and encourages intermodal competition in order to ensure that the greatest possible number of Americans will be connected to the best possible networks, all at a competitive cost.

To implement the Rural Digital Opportunity Fund auction (or Auction 904), the Commission adopted new rules for the Rural Digital Opportunity Fund auction, including the adoption of a two-stage application process. Like with the CAF Phase II auction, this process includes a pre-auction short-form application to be submitted by parties interested in bidding in the Rural Digital Opportunity Fund auction (FCC Form 183) and a post-auction long-form application that must be submitted by winning bidders (or their designees) seeking to become authorized to receive Rural Digital Opportunity Fund support (FCC Form 683). The Commission is seeking approval for the short-form application (FCC Form 183) in a separate collection under the OMB control number 3060–1252.

This proposed revision seeks approval of the disclosures and certifications adopted by the Commission that must be made by winning bidders seeking to become authorized for Rural Digital Opportunity Fund support. The Commission plans to submit at a later date additional revisions or new collections for OMB review to address other reforms adopted in the above-referenced Order.

The Commission therefore proposes to revise this information collection to reflect these requirements to determine the recipients of Connect America Phase II auction and Rural Digital Opportunity Fund auction support.

Federal Communications Commission.

Cecilia Sigmund,

Federal Register Liaison Officer, Office of the Secretary.

[FR Doc. 2020–07036 Filed 4–2–20; 8:45 am]

BILLING CODE 6712–01–P

FEDERAL COMMUNICATIONS COMMISSION

[CC Docket No. 92–237; DA 20–301; FRS 16593]

Next Meeting of the North American Numbering Council

AGENCY: Federal Communications Commission.

ACTION: Notice.

SUMMARY: In this document, the Commission released a public notice announcing the meeting of the North American Numbering Council (NANC), which will be held via conference call and available to the public via live internet feed.

DATES: Tuesday, May 5, 2020. The meeting will come to order at 9:30 a.m.

ADDRESSES: The Meeting will be held via conference call and open to the public on the internet via live feed from the FCC's web page at *http://www.fcc.gov/live.*

FOR FURTHER INFORMATION CONTACT: Marilyn Jones, Designated Federal Officer (DFO) of the NANC, at *marilyn.jones@fcc.gov* or 202–418–2357 and Jordan Reth, Deputy DFO, at *jordan.reth@fcc.gov* or 202–418–1418. More information about the NANC is available at *https://www.fcc.gov/about-fcc/advisory-committees/general/north-american-numbering-council.*

SUPPLEMENTARY INFORMATION: The NANC meeting is open to the public on the internet via live feed from the FCC's web page at *http://www.fcc.gov/live.* Open captioning will be provided for this event. Other reasonable accommodations for people with disabilities are available upon request. Requests for such accommodations

should be submitted via email to *fcc504@fcc.gov* or by calling the Consumer & Governmental Affairs Bureau at (202) 418–0530 (voice), (202) 418–0432 (TTY). Such requests should include a detailed description of the accommodation needed. In addition, please include a way for the FCC to contact the requester if more information is needed to fill the request. Please allow at least five days' advance notice for accommodation requests; last minute requests will be accepted but may not be possible to accommodate. Oral statements at the meeting by parties or entities not represented on the NANC will be permitted to the extent time permits, at the discretion of the NANC Chair and the DFO. Members of the public may submit comments to the NANC in the FCC's Electronic Comment Filing System, ECFS, at *www.fcc.gov/ecfs.* Comments to the NANC should be filed in CC Docket No. 92–237. This is a summary of the Commission's document in CC Docket No. 92–237, DA 20–301 released March 19, 2020.

Proposed Agenda: At this meeting the NANC will receive status reports and updates from all of its working groups: Numbering Administration Oversight, Toll Free Number Assignment Modernization, Nationwide Number Portability, Interoperable Video Conferencing, and Call Authentication Trust Anchor. This agenda may be modified at the discretion of the NANC Chair and the Designated Federal Officer (DFO).

Federal Communications Commission.

Daniel Kahn,

Associate Bureau Chief, Wireline Competition Bureau.

[FR Doc. 2020–06945 Filed 4–2–20; 8:45 am]

BILLING CODE 6712–01–P

FEDERAL COMMUNICATIONS COMMISSION

[OMB 3060–1142; FRS 16615]

Information Collection Being Reviewed by the Federal Communications Commission Under Delegated Authority

AGENCY: Federal Communications Commission.

ACTION: Notice and request for comments.

SUMMARY: As part of its continuing effort to reduce paperwork burdens, and as required by the Paperwork Reduction Act (PRA) of 1995, the Federal Communications Commission (FCC or the Commission) invites the general public and other Federal agencies to take this opportunity to comment on the following information collection. Comments are requested concerning: Whether the proposed collection of information is necessary for the proper performance of the functions of the Commission, including whether the information shall have practical utility; the accuracy of the Commission's burden estimate; ways to enhance the quality, utility, and clarity of the information collected; ways to minimize the burden of the collection of information on the respondents, including the use of automated collection techniques or other forms of information technology; and ways to further reduce the information collection burden on small business concerns with fewer than 25 employees. The FCC may not conduct or sponsor a collection of information unless it displays a currently valid control number. No person shall be subject to any penalty for failing to comply with a collection of information subject to the PRA that does not display a valid Office of Management and Budget (OMB) control number.

DATES: Written PRA comments should be submitted on or before June 2, 2020. If you anticipate that you will be submitting comments, but find it difficult to do so within the period of time allowed by this notice, you should advise the contact listed below as soon as possible.

ADDRESSES: Direct all PRA comments to Nicole Ongele, FCC, via email *PRA@fcc.gov* and to *Nicole.Ongele@fcc.gov.*

FOR FURTHER INFORMATION CONTACT: For additional information about the information collection, contact Nicole Ongele at (202) 418–2991.

SUPPLEMENTARY INFORMATION:

OMB Control Number: 3060–1142.

Title: Electronic Tariff filing System (ETFS), WC Docket No. 10–141.

Form Number: N/A.

Type of Review: Extension of a currently approved collection.

Respondents: Business or other for-profit entities.

Number of Respondents and Responses: 1,307 respondents; 1,307 responses.

Estimated Time per Response: 1 hour.

Frequency of Response: On occasion and annual reporting requirements.

Obligation to Respond: Required to obtain or retain benefits. Statutory authority for this information collection is contained in 47 U.S.C. 151, 152, 154(i), 201–205, and 226(h)(l)(A) of the Communications Act of 1934, as amended.

Total Annual Burden: 1,307 hours.

Total Annual Cost: $1,254,720.

Privacy Act Impact Assessment: No impact(s).

Nature and Extent of Confidentiality: The Commission does not anticipate providing confidentiality of the information submitted by local exchange carriers. In particular, the tariffs and related documents sent to the Commission will be made public through ETFS. If the respondents submit information they believe to be confidential, they may request confidential treatment of such information under 47 CFR 0.459 of the Commission's rules.

Needs and Uses: Incumbent local exchange carriers (LECs) file their tariffs and associated documents electronically, using ETFS. ETFS has improved the usefulness of tariff filings for both filers and the public and made the tariff filing process more open, transparent, and efficient. On June 30, 2011, the Commission released a Report and Order, WC Docket No. 10–141, FCC 11–92, determining that the benefits of using ETFS for incumbent LEC tariff filings would also be obtained if all tariff filers filed electronically. Such action benefits the public and carriers by creating a central system providing on-line access to all carrier tariffs and related documents filed with the Commission. As such, competitive LECs (and other nondominant carriers) must now file tariffs and associated documents electronically.

Federal Communications Commission.

Cecilia Sigmund,

Federal Register Liaison Officer, Office of the Secretary.

[FR Doc. 2020–07037 Filed 4–2–20; 8:45 am]

BILLING CODE 6712–01–P

FEDERAL COMMUNICATIONS COMMISSION

[FRS 16622]

Deletion of Items From March 31, 2020 Open Meeting

March 31, 2020.

The following items have been adopted by the Commission and deleted from the list of items scheduled for consideration at the Tuesday, March 31, 2020, Open Meeting. The items were previously listed in the Commission's Notice of Tuesday, March 24, 2020.

Item No.	Bureau	Subject
1	WIRELINE COMPETITION	TITLE: Call Authentication Trust Anchor (WC Docket No. 17–97); Implementation of TRACED Act Section 6(a)—Knowledge of Customers by Entities with Access to Numbering Resources (WC Docket No. 20–67) SUMMARY: The Commission will consider a Report and Order and Further Notice of Proposed Rulemaking that would (1) adopt rules requiring originating and terminating voice service providers to implement the STIR/SHAKEN caller ID authentication framework in the Internet Protocol portions of their networks; and (2) propose additional measures to combat illegal spoofing, including measures to implement portions of the TRACED Act.
2	MEDIA	TITLE: Rules Governing the Use of Distributed Transmission System Technologies (MB Docket No. 20–74); Authorizing Permissive Use of the ''Next Generation'' Broadcast Television Standard (GN Docket No. 16–142) SUMMARY: The Commission will consider a Notice of Proposed Rulemaking that would seek comment on whether to modify the Commission's rules governing the use of distributed transmission systems by broadcast television stations.
3	MEDIA	TITLE: Significantly Viewed Stations (MB Docket No. 20–73); Modernization of Media Regulation Initiative (MB Docket No. 17–105) SUMMARY: The Commission will consider a Notice of Proposed Rulemaking that would seek comment on whether to update the methodology for determining whether a television broadcast station is ''significantly viewed'' in a community outside of its local market.
4	MEDIA	TITLE: Revision of the Commission's Part 76 Review Procedures (MB Docket No. 20–70); Modernization of Media Regulation Initiative (MB Docket No. 17–105); Revision of the Commission's Program Carriage Rules (MB Docket No. 11–131) SUMMARY: The Commission will consider a Further Notice of Proposed Rulemaking and Notice of Proposed Rulemaking that would seek comment on whether to modify the Commission's rules governing the resolution of program carriage disputes between video programming vendors and multichannel video programming distributors.
5	WIRELINE COMPETITION	TITLE: Eliminating *Ex Ante* Pricing Regulation and Tariffing of Telephone Access Charges (WC Docket No. 20–71) SUMMARY: The Commission will consider a Notice of Proposed Rulemaking that would propose to (1) eliminate *ex ante* pricing regulation and require detariffing of various end-user charges associated with interstate access service, and (2) prohibit carriers from separately listing these charges on customers' telephone bills.
6	MANAGING DIRECTOR	TITLE: Personnel Action #20–1 SUMMARY: The Commission will consider a Personnel Action.
7	MANAGING DIRECTOR	TITLE: Personnel Action #20–2 SUMMARY: The Commission will consider a Personnel Action.
8	MANAGING DIRECTOR	TITLE: Personnel Action #20–4 SUMMARY: The Commission will consider a Personnel Action.
9	MANAGING DIRECTOR	TITLE: Personnel Action #20–5 SUMMARY: The Commission will consider a Personnel Action.

Federal Communications Commission.

Cecilia Sigmund,

Federal Register Liaison Officer, Office of the Secretary.

[FR Doc. 2020–07032 Filed 4–2–20; 8:45 am]

BILLING CODE 6712–01–P

FEDERAL COMMUNICATIONS COMMISSION

[OMB 3060–0865; FRS 16613]

Information Collection Being Submitted for Review and Approval to Office of Management and Budget

AGENCY: Federal Communications Commission.

ACTION: Notice and request for comments.

SUMMARY: As part of its continuing effort to reduce paperwork burdens, as required by the Paperwork Reduction Act (PRA) of 1995, the Federal Communications Commission (FCC or the Commission) invites the general public and other Federal Agencies to take this opportunity to comment on the following information collection. Pursuant to the Small Business Paperwork Relief Act of 2002, the FCC seeks specific comment on how it might ''further reduce the information collection burden for small business concerns with fewer than 25 employees.'' The Commission may not conduct or sponsor a collection of information unless it displays a currently valid Office of Management and Budget (OMB) control number. No person shall be subject to any penalty for failing to comply with a collection of information subject to the PRA that does not display a valid OMB control number.

DATES: Written comments and recommendations for the proposed information collection should be submitted on or before May 4, 2020.

ADDRESSES: Comments should be sent to *www.reginfo.gov/public/do/PRAMain.* Find this particular information collection by selecting ''Currently under 30-day Review—Open for Public Comments'' or by using the search function. Your comment must be submitted into *www.reginfo.gov* per the above instructions for it to be considered. In addition to submitting in *www.reginfo.gov* also send a copy of your comment on the proposed information collection to Cathy Williams, FCC, via email to *PRA@fcc.gov* and to *Cathy.Williams@fcc.gov.* Include in the comments the OMB control number as shown in the **SUPPLEMENTARY INFORMATION** below.

FOR FURTHER INFORMATION CONTACT: For additional information or copies of the information collection, contact Cathy Williams at (202) 418–2918. To view a copy of this information collection request (ICR) submitted to OMB: (1) Go to the web page *http://www.reginfo.gov/public/do/PRAMain,* (2) look for the

section of the web page called ''Currently Under Review,'' (3) click on the downward-pointing arrow in the ''Select Agency'' box below the ''Currently Under Review'' heading, (4) select ''Federal Communications Commission'' from the list of agencies presented in the ''Select Agency'' box, (5) click the ''Submit'' button to the right of the ''Select Agency'' box, (6) when the list of FCC ICRs currently under review appears, look for the Title of this ICR and then click on the ICR Reference Number. A copy of the FCC submission to OMB will be displayed.

SUPPLEMENTARY INFORMATION: As part of its continuing effort to reduce paperwork burdens, as required by the Paperwork Reduction Act (PRA) of 1995 (44 U.S.C. 3501–3520), the FCC invited the general public and other Federal Agencies to take this opportunity to comment on the following information collection. Comments are requested concerning: (a) Whether the proposed collection of information is necessary for the proper performance of the functions of the Commission, including whether the information shall have practical utility; (b) the accuracy of the Commission's burden estimates; (c) ways to enhance the quality, utility, and clarity of the information collected; and (d) ways to minimize the burden of the collection of information on the respondents, including the use of automated collection techniques or other forms of information technology. Pursuant to the Small Business Paperwork Relief Act of 2002, Public Law 107–198, see 44 U.S.C. 3506(c)(4), the FCC seeks specific comment on how it might ''further reduce the information collection burden for small business concerns with fewer than 25 employees.''

OMB Control No.: 3060–0865.

Title: Wireless Telecommunications Bureau Universal Licensing System Recordkeeping and Third-Party Disclosure Requirements.

Form No.: N/A.

Type of Review: Extension of a currently approved collection.

Respondents: Business or other for-profit entities, Individuals or households, Not-for-profit institutions, and State, Local or Tribal Government.

Number of Respondents and Responses: 84,048 respondents; 84,050 responses.

Estimated Time per Response: .166 hours (10 minutes)—4 hours.

Frequency of Response: Recordkeeping and third-party disclosure requirements; on occasion reporting requirement.

Obligation To Respond: Required to obtain or retain benefits. The statutory authority for this collection is contained in 47 U.S.C. 154(i) and 309(j).

Total Annual Burden: 116,306 hours.

Annual Cost Burden: No cost.

Privacy Act Impact Assessment: Yes.

Nature and Extent of Confidentiality: This information collection contains personally identifiable information (PII). The FCC has a system of records notice (SORN), FCC/WTB–1, ''Wireless Services Licensing Records,'' to cover the collection, maintenance, use(s), and destruction of this PII, which respondents may provide to the FCC as part of the information collection requirement(s). This SORN was published in the **Federal Register** on April 5, 2006 (71 FR 17234).

Needs and Uses: The Commission will submit this information collection to the Office of Management and Budget (OMB) as an extension after this 60-day comment period to obtain the full three-year clearance from them.

The purpose of this information collection is to continually streamline and simplify processes for wireless applicants and licensees, who previously used a myriad of forms for various wireless services and types of requests, in order to provide the Commission information that has been collected in separate databases, each for a different group of services. Such processes have resulted in unreliable reporting, duplicate filings for the same licensees/applicants, and higher cost burdens to licensees/applicants. By streamlining the Universal Licensing System (ULS), the Commission eliminates the filing of duplicative applications for wireless carriers; increases the accuracy and reliability of licensing information; and enables all wireless applicants and licensees to file all licensing-related applications and other filings electronically, thus increasing the speed and efficiency of the application process. The ULS also benefits wireless applicants/licensees by reducing the cost of preparing applications, and speeds up the licensing process in that the Commission can introduce new entrants more quickly into this already competitive industry. Finally, ULS enhances the availability of licensing information to the public, which has access to all publicly available wireless licensing information online, including maps depicting a licensee's geographic service area.

Federal Communications Commission.

Cecilia Sigmund,

Federal Register Liaison Officer, Office of the Secretary.

[FR Doc. 2020–06932 Filed 4–2–20; 8:45 am]

BILLING CODE 6712–01–P

FEDERAL HOUSING FINANCE AGENCY

[No. 2020–N–8]

Proposed Collection; Comment Request

AGENCY: Federal Housing Finance Agency.

ACTION: National Survey of Mortgage Originations—30-day Notice of Submission of Information Collection for Approval from Office of Management and Budget.

SUMMARY: In accordance with the requirements of the Paperwork Reduction Act of 1995 (PRA), the Federal Housing Finance Agency (FHFA) is seeking public comments concerning an information collection known as the ''National Survey of Mortgage Originations'' (NSMO), which has been assigned control number 2590–0012 by the Office of Management and Budget (OMB). FHFA intends to submit the information collection to OMB for review and approval of a three-year extension of the control number, which is due to expire on April 30, 2020.

DATES: Interested persons may submit comments on or before May 4, 2020.

ADDRESSES: Submit comments to the Office of Information and Regulatory Affairs of the Office of Management and Budget, Attention: Desk Officer for the Federal Housing Finance Agency, Washington, DC 20503, Fax: (202) 395–3047, Email: *OIRA_submission@omb.eop.gov.* Please also submit comments to FHFA, identified by ''Proposed Collection; Comment Request: 'National Survey of Mortgage Originations, (No. 2020–N–8)' '' by any of the following methods:

- *Agency website: www.fhfa.gov/open-for-comment-or-input.*
- *Federal eRulemaking Portal: http://www.regulations.gov.* Follow the instructions for submitting comments. If you submit your comment to the *Federal eRulemaking Portal,* please also send it by *email* to FHFA at *RegComments@fhfa.gov* to ensure timely receipt by the agency.
- *Mail/Hand Delivery:* Federal Housing Finance Agency, Eighth Floor, 400 Seventh Street SW, Washington, DC 20219, ATTENTION: Proposed Collection; Comment Request: ''National Survey of Mortgage Originations, (No. 2020–N–8).''

We will post all public comments we receive without change, including any personal information you provide, such as your name and address, email address, and telephone number, on the FHFA website at *http://www.fhfa.gov.* In

addition, copies of all comments received will be available for examination by the public through the electronic comment docket for this PRA Notice also located on the FHFA website.

FOR FURTHER INFORMATION CONTACT: Saty Patrabansh, Manager, National Mortgage Database Program, *Saty.Patrabansh@fhfa.gov,* (202) 649–3213; or Eric Raudenbush, Associate General Counsel, *Eric.Raudenbush@fhfa.gov,* (202) 649–3084, (these are not toll-free numbers), Federal Housing Finance Agency, 400 Seventh Street SW, Washington, DC 20219. The Telecommunications Device for the Deaf is (800) 877–8339.

SUPPLEMENTARY INFORMATION:

A. Need for and Use of the Information Collection

The NSMO is a recurring quarterly survey of individuals who have recently obtained a loan secured by a first mortgage on single-family residential property. The survey questionnaire is sent to a representative sample of approximately 6,000 recent mortgage borrowers each calendar quarter and consists of 96 multiple choice and short answer questions designed to obtain information about borrowers' experiences in choosing and in taking out a mortgage. The questionnaire may be completed either on paper (in English only) or electronically online (in either English or Spanish). FHFA is also seeking clearance to pretest future iterations of the survey questionnaire and related materials from time to time through the use of focus groups. A copy of the survey questionnaire sent out in the first quarter of 2020 appears at the end of this notice.[1]

The NSMO is a component of the ''National Mortgage Database'' (NMDB) Program which is a joint effort of FHFA and the Consumer Financial Protection Bureau (CFPB). The NMDB Program is designed to satisfy the Congressionally-mandated requirements of section 1324(c) of the Federal Housing Enterprises Financial Safety and Soundness Act.[2] Section 1324(c) requires that FHFA conduct a monthly survey to collect data on the characteristics of individual prime and subprime mortgages, and on the borrowers and properties associated with those mortgages, in order to enable it to prepare a detailed annual report on the mortgage market activities of the Federal National Mortgage Association (Fannie Mae) and the Federal Home Loan Mortgage Corporation (Freddie Mac) for review by the appropriate Congressional oversight committees. Section 1324(c) also authorizes and requires FHFA to compile a database of otherwise unavailable residential mortgage market information and to make that information available to the public in a timely fashion.

As a means of fulfilling those and other statutory requirements, as well as to support policymaking and research regarding the residential mortgage markets, FHFA and CFPB jointly established the NMDB Program in 2012. The Program is designed to provide comprehensive information about the U.S. mortgage market and has three primary components: (1) The NMDB; (2) the NSMO; and (3) the American Survey of Mortgage Borrowers (ASMB).

The NMDB is a de-identified loan-level database of closed-end first-lien residential mortgage loans that is representative of the market as a whole, contains detailed loan-level information on the terms and performance of the mortgages and the characteristics of the associated borrowers and properties, is continually updated, has an historical component dating back to 1998, and provides a sampling frame for surveys to collect additional information. The core data in the NMDB are drawn from a random 1-in-20 sample of all closed-end first-lien mortgage files outstanding at any time between January 1998 and the present in the files of Experian, one of the three national credit repositories. A random 1-in-20 sample of mortgages newly reported to Experian is added each quarter.

The NMDB draws additional information on mortgages in the NMDB datasets from other existing sources, including the Home Mortgage Disclosure Act (HMDA) data that are maintained by the Federal Financial Institutions Examination Council (FFIEC), property valuation models, and data files maintained by Fannie Mae and Freddie Mac and by federal agencies. FHFA also obtains data from the ASMB, which solicits information on borrowers' experience with maintaining their existing mortgages, including their experience maintaining mortgages under financial stress, their experience in soliciting financial assistance, their success in accessing federally-sponsored programs designed to assist them, and, where applicable, any challenges they may have had in terminating a mortgage loan.[3]

While the ASMB focuses on borrowers' experience with maintaining existing mortgages, the NSMO solicits information on newly-originated mortgages and the borrowers' experiences with the mortgage origination process. It was developed to complement the NMDB by providing critical and timely information—not available from existing sources—on the range of nontraditional and subprime mortgage products being offered, the methods by which these mortgages are being marketed, and the characteristics of borrowers for these types of loans. In particular, the survey questionnaire is designed to elicit directly from mortgage borrowers information on the characteristics of the borrowers and on their experiences in finding and obtaining a mortgage loan, including: Their mortgage shopping behavior; their mortgage closing experiences; their expectations regarding house price appreciation; and critical financial and other life events affecting their households, such as unemployment, large medical expenses, or divorce. The survey questions do not focus on the terms of the borrowers' mortgage loans because these fields are available in the Experian data. However, the NSMO collects a limited amount of information on each respondent's mortgage to verify that the Experian records and survey responses pertain to the same mortgage.

Each wave of the NSMO is sent to the primary borrowers on about 6,000 mortgage loans, which are drawn from a simple random sample of the 80,000 to 100,000 newly originated mortgage loans that are added to the National Mortgage Database from the Experian files each quarter (at present, this represents an approximately 1-in-15 sample of loans added to the National Mortgage Database and an approximately 1-in-300 sample of all mortgage loan originations). By contract with FHFA, the conduct of the NSMO is administered through Experian, which has subcontracted the survey administration through a competitive process to Westat, a nationally-recognized survey vendor.[4] Westat also carries out the pre-testing of the survey materials.

B. Need For and Use of the Information Collection

FHFA views the NMDB Program as a whole, including the NSMO, as the monthly ''survey'' that is required by

[1] In addition, copies of the questionnaire in both English and Spanish can be accessed online at: *http://www.fhfa.gov/Homeownersbuyer/Pages/National-Survey-of-Mortgage-Originations.aspx.*

[2] 12 U.S.C. 4544(c).

[3] OMB has assigned the ASMB control no. 2590–0015, which expired on July 31, 2019.

[4] The Fair Credit Reporting Act, 15 U.S.C. 1681 *et seq.,* requires that the survey process, because it utilizes borrower names and addresses drawn from credit reporting agency records, must be administered through Experian in order to maintain consumer privacy.

section 1324 of the Safety and Soundness Act. Core inputs to the NMDB, such as a regular refresh of the Experian data, occur monthly, though NSMO itself does not. In combination with the other information in the NMDB, the information obtained through the NSMO is used to prepare the report to Congress on the mortgage market activities of Fannie Mae and Freddie Mac that FHFA is required to submit under section 1324, as well as for research and analysis by FHFA and CFPB in support of their regulatory and supervisory responsibilities related to the residential mortgage markets. The NSMO is especially critical in ensuring that the NMDB contains uniquely comprehensive information on the range of nontraditional and subprime mortgage products being offered, the methods by which these mortgages are being marketed and the characteristics—and particularly the creditworthiness—of borrowers for these types of loans. Datasets collected through the NSMO for public use are available online.[5] The information provides a resource for research and analysis by federal agencies, by Fannie Mae and Freddie Mac, and by academics and other interested parties outside of the government.

FHFA is also seeking OMB approval to continue to conduct cognitive pre-testing of the survey materials. The Agency uses information collected through that process to assist in drafting and modifying the survey questions and instructions, as well as the related communications, to read in the way that will be most readily understood by the survey respondents and that will be most likely to elicit usable responses. Such information is also used to help the Agency decide on how best to organize and format the survey questionnaires.

The OMB control number for this information collection is 2590–0012. The current clearance for the information collection expires on April 30, 2020.

C. Burden Estimate

FHFA has analyzed the hour burden on members of the public associated with: (1) Conducting the survey (12,000 hours); and (2) pre-testing the survey materials (30 hours) and estimates the total annual hour burden imposed on the public by this information collection to be 12,030 hours. The estimate for each phase of the collection was calculated as follows:

(1) Conducting the Survey

FHFA estimates that the NSMO questionnaire will be sent to 24,000 recipients annually (6,000 recipients per quarterly survey × 4 calendar quarters). Although, based on historical experience, the Agency expects that only 20 to 30 percent of those surveys will be returned, it has assumed that all of the surveys will be returned for purposes of this burden calculation. Based on the reported experience of respondents to prior NSMO questionnaires, FHFA estimates that it will take each respondent 30 minutes to complete the survey, including the gathering of necessary materials to respond to the questions. This results in a total annual burden estimate of 12,000 hours for the survey phase of this collection (24,000 respondents × 30 minutes per respondent-12,000 hours annually).

(2) Pre-Testing the Materials

FHFA estimates that it will pre-test the survey materials with 30 cognitive testing participants annually. The estimated participation time for each participant is one hour, resulting in a total annual burden estimate of 30 hours for the pre-testing phase of the collection (30 participants × 1 hour per participant = 30 hours annually).

D. Comment Request

In accordance with the requirements of 5 CFR 1320.8(d), FHFA published an initial notice and request for public comments regarding this information collection in the **Federal Register** on December 10, 2019.[6] The 60-day comment period closed on February 10, 2020. FHFA received no comments.

FHFA requests written comments on the following: (1) Whether the collection of information is necessary for the proper performance of FHFA functions, including whether the information has practical utility; (2) The accuracy of FHFA's estimates of the burdens of the collection of information; (3) Ways to enhance the quality, utility, and clarity of the information collected; and (4) Ways to minimize the burden of the collection of information on respondents, including through the use of automated collection techniques or other forms of information technology.

Robert Winkler,

Chief Information Officer, Federal Housing Finance Agency.

BILLING CODE 8070–01–P

[5] NSMO data can be accessed at: *https://www.fhfa.gov/nsmodata.*

[6] *See* 84 FR 67447 (Dec. 10, 2019).

Improving Mortgage Experiences in America

National Survey of Mortgage Originations

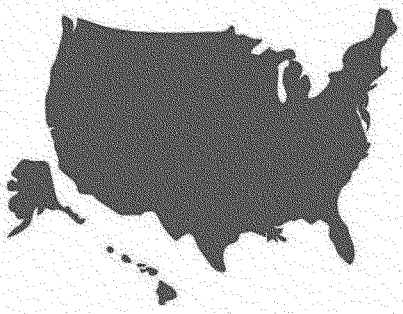

We are conducting this survey of people who have taken out or co-signed for a mortgage loan to purchase a housing property, or to refinance or modify an existing loan.

Learning directly from borrowers like you about your mortgage experiences will help us improve lending practices and the mortgage process for future borrowers like you. It is important to get the perspective of all borrowers for making government policies.

You can mail back the paper survey in the enclosed business reply envelope or complete the survey online. The online version may be easier to complete, because it skips any questions that do not apply to you based on your responses. Online responses are also processed more quickly making it less likely that you will receive reminders to complete this survey. We appreciate your help either way.

To complete the survey online, in English or Spanish

Go to: www.NSMOsurvey.com

Enter the unique access code provided in the letter we sent you.

Esta encuesta está disponible en español en línea

*Visite al sitio web **www.NSMOsurvey.com***

Inicie la sesión con su número PIN único de la encuesta que se encuentra en la carta adjunta.

ABOUT THE SPONSORS: The **Federal Housing Finance Agency** and the **Consumer Financial Protection Bureau** are working together to sponsor this survey. We are doing this because both agencies are concerned with improving the safety of the U.S. housing finance system and making sure all consumers have better access to mortgages. Thanks so much for helping us assist future borrowers.

You can find more information on our websites - **www.fhfa.gov/nsmo** and **www.consumerfinance.gov**

Your answers to this survey will help us as we improve the safety of the U.S. housing finance system and help to ensure that people have access to funds needed to build or improve housing.

We look forward to hearing from you.

Privacy Act Notice: In accordance with the Privacy Act, as amended (5 U.S.C. § 552a), the following notice is provided. The information requested on this Survey is collected pursuant to 12 U.S.C. 4544 for the purposes of gathering information for the National Mortgage Database. Routine uses which may be made of the collected information can be found in the Federal Housing Finance Agency's System of Records Notice (SORN) FHFA-21 National Mortgage Database. Providing the requested information is voluntary. Submission of the survey authorizes FHFA to collect the information provided and to disclose it as set forth in the referenced SORN.

Paperwork Reduction Act Statement: Notwithstanding any other provision of the law, no person is required to respond to, nor shall any person be subject to a penalty for failure to comply with, a collection of information subject to the requirements of the Paperwork Reduction Act, unless that collection of information displays a currently valid OMB Control Number.

OMB No. 2590-0012
Expires 4/30/20

1. Did you take out or co-sign for a mortgage loan sometime in the last couple of years including a purchase or any refinance/modification of an existing loan?

☐ Yes
☐ No → **Skip to 72 on page 7**

2. When did you take out this mortgage? If you took out or co-signed for more than one mortgage, please refer to your experience with the most recent refinance, modification, or new mortgage.

_____ / _____
month year

3. Did we mail this survey to the address of the property you financed with this mortgage?

☐ Yes ☐ No

4. Who signed or co-signed for this mortgage? *Mark all that apply.*

☐ I signed
☐ Spouse/partner including a former spouse/partner
☐ Parents
☐ Children
☐ Other relatives
☐ Other (e.g. friend, business partner)

→ **If you co-signed this loan with others, take into account all co-signers as best you can when answering the survey. If no co-signers, answer based on your own situation.**

5. When you began the process of getting this mortgage, how familiar were you (and any co-signers) with each of the following?

	Very	Somewhat	Not At All
The mortgage interest rates available at that time	☐	☐	☐
The different types of mortgages available	☐	☐	☐
The mortgage process	☐	☐	☐
The down payment needed to qualify for a mortgage	☐	☐	☐
The income needed to qualify for a mortgage	☐	☐	☐
Your credit history or credit score	☐	☐	☐
The money needed at closing	☐	☐	☐

6. When you began the process of getting this mortgage, how concerned were you about qualifying for a mortgage?

☐ Very ☐ Somewhat ☐ Not at all

7. How firm an idea did you have about the mortgage you wanted?

☐ Firm idea ☐ Some idea ☐ Little idea

8. How much did you use each of the following sources to get information about mortgages or mortgage lenders?

	A Lot	A Little	Not At All
Your mortgage lender/broker	☐	☐	☐
Other mortgage lenders/brokers	☐	☐	☐
Real estate agents or builders	☐	☐	☐
Material in the mail	☐	☐	☐
Websites that provide information on getting a mortgage	☐	☐	☐
Newspaper/TV/Radio	☐	☐	☐
Friends/relatives/co-workers	☐	☐	☐
Bankers, credit unions or financial planners	☐	☐	☐
Housing counselors	☐	☐	☐
Other (specify) _____	☐	☐	☐

9. Which one of the following best describes your shopping process?

☐ I picked the loan type first, and then I picked the mortgage lender/broker
☐ I picked the mortgage lender/broker first, and then I picked the loan type

10. Which one of the following best describes how you applied for this mortgage?

☐ Directly to a lender, such as a bank or credit union
☐ Through a mortgage broker who works with multiple lenders to get you a loan
☐ Through a builder who arranged financing
☐ Other (specify) _____

11. How many different mortgage lenders/brokers did you seriously consider before choosing where to apply for this mortgage?

☐ 1 ☐ 2 ☐ 3 ☐ 4 ☐ 5 or more

Draft

12. How many different mortgage lenders/brokers did you end up applying to?

☐ 1 ☐ 2 ☐ 3 ☐ 4 ☐ 5 or more

13. Did you apply to more than one mortgage lender/broker for any of the following reasons?

	Yes	No
Searching for better loan terms	☐	☐
Concern over qualifying for a loan	☐	☐
Information learned from the "Loan Estimate"	☐	☐
Turned down on earlier application	☐	☐

14. How important were each of the following in choosing the mortgage lender/broker you used for the mortgage you took out?

	Important	Not Important
Having an established banking relationship	☐	☐
Having a local office or branch nearby	☐	☐
Used previously to get a mortgage	☐	☐
Mortgage lender/broker is a personal friend or relative	☐	☐
Paperless online mortgage process	☐	☐
Recommendation from a friend/ relative/co-worker	☐	☐
Recommendation from a real estate agent/home builder	☐	☐
Reputation of mortgage lender/broker	☐	☐
Spoke my primary language, which is not English	☐	☐

15. Who initiated the first contact between you and the mortgage lender/broker you used for the mortgage you took out?

☐ I (or one of my co-signers) did
☐ The mortgage lender/broker did
☐ We were put in contact by a third party *(such as a real estate agent or home builder)*

16. How open were you to suggestions from your mortgage lender/broker about mortgages with different features or terms?

☐ Very ☐ Somewhat ☐ Not at all

17. How important were each of the following in determining the mortgage you took out?

	Important	Not Important
Lower interest rate	☐	☐
Lower APR *(Annual Percentage Rate)*	☐	☐
Lower closing fees	☐	☐
Lower down payment	☐	☐
Lower monthly payment	☐	☐
An interest rate fixed for the life of the loan	☐	☐
A term of 30 years	☐	☐
No mortgage insurance	☐	☐

18. Your lender may have given you a booklet "Your home loan toolkit: A step-by-step guide," do you remember receiving a copy?

☐ Yes
☐ No
☐ Don't know

Skip to 20

19. Did the "Your home loan toolkit" booklet lead you to ask additional questions about your mortgage terms?

☐ Yes ☐ No

20. In the process of getting this mortgage from your mortgage lender/broker, did you...

	Yes	No
Have to add another co-signer to qualify	☐	☐
Resolve credit report errors or problems	☐	☐
Answer follow-up requests for more information about income or assets	☐	☐
Have more than one appraisal	☐	☐
Redo/refile paperwork due to processing delays	☐	☐
Delay or postpone closing date	☐	☐
Have your "Loan Estimate" revised to reflect changes in your loan terms	☐	☐
Check other sources to confirm that terms of this mortgage were reasonable	☐	☐

21. Was the "Loan Estimate" you received from your mortgage lender/broker...

	Yes	No
Easy to understand	☐	☐
Valuable information	☐	☐

Draft

22. Did the "Loan Estimate" lead you to...

	Yes	No
Ask questions of your mortgage lender/ broker	☐	☐
Seek a change in your loan or closing	☐	☐
Apply to a different mortgage lender/broker	☐	☐

23. During the application process were you told about mortgages with any of the following?

	Yes	No
An interest rate that is fixed for the life of the loan	☐	☐
An interest rate that could change over the life of the loan	☐	☐
A term of less than 30 years	☐	☐
A higher interest rate in return for lower closing costs	☐	☐
A lower interest rate in return for paying higher closing costs *(discount points)*	☐	☐
Interest-only monthly payments	☐	☐
An escrow account for taxes and/or homeowner insurance	☐	☐
A prepayment penalty *(fee if the mortgage is paid off early)*	☐	☐
Reduced documentation or "easy" approval	☐	☐
An FHA, VA, USDA or Rural Housing loan	☐	☐

24. In selecting your settlement/closing agent did you use someone...

	Yes	No
Selected/recommended by the mortgage lender/broker, or real estate agent	☐	☐
You used previously	☐	☐
Found shopping around	☐	☐

☐ Did not have a settlement/closing agent

25. Do you have title insurance on this mortgage?

☐ Yes
☐ No
☐ Don't know
} **Skip to 27**

26. Which one best describes how you picked the title insurance?

☐ Reissued previous title insurance
☐ Used title insurance recommended by mortgage lender/broker or settlement agent
☐ Shopped around

27. Overall, how satisfied are you that the mortgage you got was the one with the...

	Very	Somewhat	Not At All
Best terms to fit your needs	☐	☐	☐
Lowest interest rate for which you could qualify	☐	☐	☐
Lowest closing costs	☐	☐	☐

28. Overall, how satisfied are you with the...

	Very	Somewhat	Not At All
Mortgage lender/broker you used	☐	☐	☐
Application process	☐	☐	☐
Documentation process required for the loan	☐	☐	☐
Loan closing process	☐	☐	☐
Information in mortgage disclosure documents	☐	☐	☐
Timeliness of mortgage disclosure documents	☐	☐	☐
Settlement agent	☐	☐	☐

29. Did you take a course about home-buying or talk to a professional housing counselor?

☐ Yes
☐ No → **Skip to 33 on page 4**

30. Was your home-buying course or counseling...

	Yes	No
In person, one-on-one	☐	☐
In person, in a group	☐	☐
Over the phone	☐	☐
Online	☐	☐
Required	☐	☐

31. How many hours was your home-buying course or counseling?

☐ Less than 3 hours
☐ 3 – 6 hours
☐ 7 – 12 hours
☐ More than 12 hours

32. Overall, how helpful was your home-buying course or counseling?

☐ Very ☐ Somewhat ☐ Not at all

Draft

33. Which one of these reasons best describes this most recent mortgage?

- ☐ To buy a property
- ☐ To refinance or modify an earlier mortgage
- ☐ To add/remove co-signer(s)/co-owner(s)
- ☐ To finance a construction loan
- ☐ To take out a new loan on a mortgage-free property
- ☐ Some other purpose (specify) _____

Skip to 37

34. Did you do the following before or after you made an offer on this house or property?

	Before Offer	After Offer	Did Not Do
Contacted a lender to explore mortgage options	☐	☐	☐
Got a pre-approval or pre-qualification from a lender	☐	☐	☐
Decided on the type of loan	☐	☐	☐
Made a decision on which lender to use	☐	☐	☐
Submitted an official loan application	☐	☐	☐

35. Did you use any of the following sources of funds to buy this property?

	Used	Not Used
Proceeds from the sale of another property	☐	☐
Savings, retirement account, inheritance, or other assets	☐	☐
Assistance or loan from a nonprofit or government agency	☐	☐
A second lien, home equity loan, or home equity line of credit (HELOC)	☐	☐
Gift or loan from family or friend	☐	☐
Seller contribution	☐	☐

36. What percent of the purchase price was the down payment to buy this property (including money from a prior home sale, gifts, etc.)?

- ☐ 0%
- ☐ Less than 3%
- ☐ 3% to less than 5%
- ☐ 5% to less than 10%
- ☐ 10% to less than 20%
- ☐ 20% to less than 30%
- ☐ 30% or more

Skip to 40

37. How important were the following in your decision to refinance, modify or obtain a new mortgage?

	Important	Not Important
Change to a fixed-rate loan	☐	☐
Get a lower interest rate	☐	☐
Remove private mortgage insurance	☐	☐
Get a lower monthly payment	☐	☐
Consolidate or pay down other debt	☐	☐
Repay the loan more quickly	☐	☐
Take out cash	☐	☐

38. Approximately how much was owed, in total, on the old mortgage(s) and loan(s) you refinanced?

$ _____ .00

☐ Zero *(the property was mortgage-free)*

39. Did you use the money you got from this new mortgage for any of the following?

	Yes	No
College expenses	☐	☐
Auto or other major purchase	☐	☐
Buy out co-signer(s)/co-owner(s)	☐	☐
Pay off other bills or debts	☐	☐
Home repairs or new construction	☐	☐
Savings	☐	☐
Closing costs of new mortgage	☐	☐
Business or investment	☐	☐
Other (specify) _____	☐	☐

☐ Did not get money from refinancing

This Mortgage

40. When you took out this most recent mortgage or refinance, what was the dollar amount you borrowed?

$ _____ .00 ☐ Don't know

41. What is the monthly payment, including the amount paid to escrow for taxes and insurance?

$ _____ .00 ☐ Don't know

42. What is the interest rate on this mortgage?

_____ % ☐ Don't know

Draft

43. Is this an adjustable-rate mortgage (one that allows the interest rate to change over the life of the loan)?

☐ Yes ☐ No ☐ Don't know

44. Which one of the following best describes how you decided on the interest rate of your mortgage?

☐ Paid higher closing costs to get lower interest rate
☐ Paid lower closing costs with a higher interest rate
☐ Got a balance between closing costs and interest rate

45. Does this mortgage have...

	Yes	No	Don't Know
A prepayment penalty *(fee if the mortgage is paid off early)*	☐	☐	☐
An escrow account for taxes and/or homeowner insurance	☐	☐	☐
A balloon payment	☐	☐	☐
Interest-only payments	☐	☐	☐
Private mortgage insurance	☐	☐	☐

46. At any time after you made your final loan application did any of the following change?

	Higher	Same	Lower
Monthly payment	☐	☐	☐
Interest rate	☐	☐	☐
Other fees	☐	☐	☐
Amount of money needed to close loan	☐	☐	☐

47. The "Closing Disclosure" statement you received at closing shows the loan closing costs and other closing costs separately. What were the loan closing costs you paid on this loan?

$ _____ .00 ☐ Don't know

48. How were the total closing costs (loan costs and other costs) for this loan paid?

	Yes	No	Don't Know
By me or a co-signer with a check or wire transfer	☐	☐	☐
Added to the mortgage amount	☐	☐	☐
By mortgage lender/broker	☐	☐	☐
By seller/builder	☐	☐	☐
Other (specify) _____	☐	☐	☐

☐ Loan had no closing costs

49. Were the loan costs you paid similar to what you had expected to pay based on the Loan Estimates or Closing Disclosures you received?

☐ Yes ☐ No

50. After closing on this mortgage, how much cash reserves in checking, savings, and other similar assets did you have remaining?

☐ Less than one month's mortgage payment
☐ 1-2 months' worth of mortgage payments
☐ 3-6 months' worth of mortgage payments
☐ 7 months' worth or more of mortgage payments

51. Did you seek input about your closing documents from any of the following people?

	Yes	No
Mortgage lender/broker	☐	☐
Settlement/closing agent	☐	☐
Real estate agent	☐	☐
Personal attorney	☐	☐
Title insurance agent	☐	☐
Trusted friend or relative who is not a co-signer on the mortgage	☐	☐
Housing counselor	☐	☐
Other (specify) _____	☐	☐

52. Did you face any of the following at your <u>loan closing</u>?

	Yes	No
Loan documents not ready at closing	☐	☐
Closing did not occur as originally scheduled	☐	☐
Three-day rule required re-disclosure	☐	☐
Mortgage terms different at closing than expected, e.g. interest rate, monthly payment	☐	☐
More cash needed at closing than expected, e.g. escrow, unexpected fees	☐	☐
Less cash needed at closing than expected	☐	☐
Asked to sign blank documents at closing	☐	☐
Asked to sign pre-dated or post-dated documents at closing	☐	☐
Felt rushed at closing or not given time to read documents	☐	☐

Draft

53. Is there any additional problem you encountered while getting this mortgage that you'd like to tell us about?

_____
_____
_____
_____
_____
_____
_____
_____
_____
_____
_____

54. At the same time you took out this mortgage, did you also take out another loan on the property you financed with this mortgage *(a second lien, home equity loan, or a home equity line of credit (HELOC))***?**

☐ Yes
☐ No → **Skip to 56**

55. What was the amount of this loan?

$ _____ .00
☐ Don't know

56. How well could you explain to someone the…

	Very	Somewhat	Not At All
Process of taking out a mortgage	☐	☐	☐
Difference between a fixed- and an adjustable-rate mortgage	☐	☐	☐
Difference between a prime and subprime loan	☐	☐	☐
Difference between a mortgage's interest rate and its APR	☐	☐	☐
Amortization of a loan	☐	☐	☐
Consequences of not making required mortgage payments	☐	☐	☐
Difference between lender's and owner's title insurance	☐	☐	☐
Relationship between discount points and interest rate	☐	☐	☐
Reason payments into an escrow account can change	☐	☐	☐

This Mortgaged Property

57. When did you first become the owner of this property?

_____ / _____
month year

58. What was the purchase price of this property, or if you built it, the construction and land cost?

$ _____ .00 ☐ Don't know

59. Which one of the following best describes how you acquired this property?

☐ Purchased an existing home
☐ Purchased a newly-built home from a builder
☐ Had or purchased land and built a house
☐ Received as a gift or inheritance
☐ Other (specify) _____

60. Which one of the following best describes this property?

☐ Single-family detached house
☐ Mobile home or manufactured home
☐ Townhouse, row house, or villa
☐ 2-unit, 3-unit, or 4-unit dwelling
☐ Apartment (or condo/co-op) in apartment building
☐ Unit in a partly commercial structure
☐ Other (specify) _____

61. Does this mortgage cover more than one unit?

☐ Yes ☐ No

62. About how much do you think this property is worth in terms of what you could sell it for now?

$ _____ .00 ☐ Don't know

63. Do you rent out all or any portion of this property?

☐ Yes
☐ No → **Skip to 65 on page 7**

64. How much rent do you receive annually?

$ _____ .00 per year

Draft

65. Besides you, the mortgage co-signers, and renters, does anyone else help pay the expenses for this property?

☐ Yes ☐ No

66. Which of the following best describes how you use this property?

☐ Primary residence *(where you spend the majority of your time)*
☐ It will be my primary residence soon
☐ Seasonal or second home
☐ Home for other relatives
☐ Rental or investment property
☐ Other (specify)_____

} **Skip to 68**

67. If primary residence, when did you move into this property?

_____ / _____
month year

68. In the last couple years, how have the following changed in the neighborhood where this property is located?

	Significant Increase	Little/No Change	Significant Decrease
Number of homes for sale	☐	☐	☐
Number of vacant homes	☐	☐	☐
Number of homes for rent	☐	☐	☐
Number of foreclosures or short sales	☐	☐	☐
House prices	☐	☐	☐
Overall desirability of living there	☐	☐	☐

69. What do you think will happen to the prices of homes in this neighborhood over the next couple of years?

☐ Increase a lot
☐ Increase a little
☐ Remain about the same
☐ Decrease a little
☐ Decrease a lot

70. In the next couple of years, how do you expect the overall desirability of living in this neighborhood to change?

☐ Become more desirable
☐ Stay about the same
☐ Become less desirable

71. How likely is it that in the next couple of years you will...

	Very	Somewhat	Not At All
Sell this property	☐	☐	☐
Move but keep this property	☐	☐	☐
Refinance the mortgage on this property	☐	☐	☐
Pay off this mortgage and own the property mortgage-free	☐	☐	☐

Your Household

72. What is your current marital status?

☐ Married
☐ Separated
☐ Never married
☐ Divorced
☐ Widowed

73. Do you have a partner who shares the decision-making and responsibilities of running your household but is not your legal spouse?

☐ Yes ☐ No

Please answer the following questions for you and your spouse or partner, if applicable.

74. Age at last birthday:

You	Spouse/ Partner
_____ years	_____ years

75. Sex:

	You	Spouse/ Partner
Male	☐	☐
Female	☐	☐

76. Highest level of education achieved:

	You	Spouse/ Partner
Some schooling	☐	☐
High school graduate	☐	☐
Technical school	☐	☐
Some college	☐	☐
College graduate	☐	☐
Postgraduate studies	☐	☐

Draft

77. Hispanic or Latino:

	You	Spouse/ Partner
Yes	☐	☐
No	☐	☐

78. Race: *Mark all that apply.*

	You	Spouse/ Partner
White	☐	☐
Black or African American	☐	☐
American Indian or Alaska Native	☐	☐
Asian	☐	☐
Native Hawaiian or Pacific Islander	☐	☐

79. Current work status: *Mark all that apply.*

	You	Spouse/ Partner
Self-employed full time	☐	☐
Self-employed part time	☐	☐
Employed full time	☐	☐
Employed part time	☐	☐
Retired	☐	☐
Unemployed, temporarily laid-off or on leave	☐	☐
Not working for pay *(student, homemaker, disabled)*	☐	☐

80. Ever served on active duty in the U.S. Armed Forces, Reserves or National Guard?

	You	Spouse/ Partner
Never served in the military	☐	☐
Only on active duty for training in the Reserves or National Guard	☐	☐
Now on active duty	☐	☐
On active duty in the past, but not now	☐	☐

81. Besides you (and your spouse/partner) who else lives in your household? *Mark all that apply.*

- ☐ Children/grandchildren under age 18
- ☐ Children/grandchildren age 18 – 22
- ☐ Children/grandchildren age 23 or older
- ☐ Parents of you or your spouse or partner
- ☐ Other relatives like siblings or cousins
- ☐ Non-relative

- ☐ No one else

82. Do you speak a language other than English at home?

- ☐ Yes
- ☐ No → **Skip to 85**

83. Was it important to get your mortgage documents in this language?

☐ Yes ☐ No

84. Did you get mortgage documents in this language?

☐ Yes ☐ No

85. Approximately how much is your total annual household income from all sources *(wages, salaries, tips, interest, child support, investment income, retirement, social security, and alimony)*?

- ☐ Less than $35,000
- ☐ $35,000 to $49,999
- ☐ $50,000 to $74,999
- ☐ $75,000 to $99,999
- ☐ $100,000 to $174,999
- ☐ $175,000 or more

86. How does this total annual household income compare to what it is in a "normal" year?

- ☐ Higher than normal
- ☐ Normal
- ☐ Lower than normal

87. Does your total annual household income include any of the following sources?

	Yes	No
Wages or salary	☐	☐
Business or self-employment	☐	☐
Interest or dividends	☐	☐
Alimony or child support	☐	☐
Social Security, pension or other retirement benefits	☐	☐

88. Does anyone in your household have any of the following?

	Yes	No
401(k), 403(b), IRA, or pension plan	☐	☐
Stocks, bonds, or mutual funds (*not in retirement accounts or pension plans*)	☐	☐
Certificates of deposit	☐	☐
Investment real estate	☐	☐

Draft

89. Which one of the following statements best describes the amount of financial risk you are willing to take when you save or make investments?

- ☐ Take substantial financial risks expecting to earn substantial returns
- ☐ Take above-average financial risks expecting to earn above-average returns
- ☐ Take average financial risks expecting to earn average returns
- ☐ Not willing to take any financial risks

90. Do you agree or disagree with the following statements?

	Agree	Disagree
Owning a home is a good financial investment	☐	☐
Most mortgage lenders generally treat borrowers well	☐	☐
Most mortgage lenders would offer me roughly the same rates and fees	☐	☐
Late payments will lower my credit rating	☐	☐
Lenders shouldn't care about any late payments, only whether loans are fully repaid	☐	☐
It is okay to default or stop making mortgage payments if it is in the borrower's financial interest	☐	☐
I would consider counseling or taking a course about managing my finances if I faced financial difficulties	☐	☐

91. In the last couple of years, have any of the following happened to you?

	Yes	No
Separated, divorced or partner left	☐	☐
Married, remarried or new partner	☐	☐
Death of a household member	☐	☐
Addition to your household (not including spouse/partner)	☐	☐
Person leaving your household (not including spouse/partner)	☐	☐
Disability or serious illness of household member	☐	☐
Disaster affecting a property you own	☐	☐
Disaster affecting your (or your spouse/partner's) work	☐	☐
Moved within the area (less than 50 miles)	☐	☐
Moved to a new area (50 miles or more)	☐	☐

92. In the last couple of years, have any of the following happened to you (or your spouse/partner)?

	Yes	No
Layoff, unemployment, or reduced hours of work	☐	☐
Retirement	☐	☐
Promotion	☐	☐
Starting a new job	☐	☐
Starting a second job	☐	☐
Business failure	☐	☐
A personal financial crisis	☐	☐

93. In the last couple years, how have the following changed for you (and your spouse/partner)?

	Significant Increase	Little/No Change	Significant Decrease
Household income	☐	☐	☐
Housing expenses	☐	☐	☐
Non-housing expenses	☐	☐	☐

94. In the next couple of years, how do you expect the following to change for you (and your spouse/partner)?

	Significant Increase	Little/No Change	Significant Decrease
Household income	☐	☐	☐
Housing expenses	☐	☐	☐
Non-housing expenses	☐	☐	☐

95. How likely is it that in the next couple of years you (or your spouse/partner) will face…

	Very	Somewhat	Not At All
Retirement	☐	☐	☐
Difficulties making your mortgage payments	☐	☐	☐
A layoff, unemployment, or forced reduction in hours	☐	☐	☐
Some other personal financial crisis	☐	☐	☐

96. If your household faced an unexpected personal financial crisis in the next couple of years, how likely is it you could…

	Very	Somewhat	Not At All
Pay your bills for the next 3 months without borrowing	☐	☐	☐
Get significant financial help from family or friends	☐	☐	☐
Borrow a significant amount from a bank or credit union	☐	☐	☐
Significantly increase your income	☐	☐	☐

Draft

The Federal Housing Finance Agency and the Consumer Financial Protection Bureau thank you for completing this survey.

We have provided the space below if you wish to share additional comments or further explain any of your answers. ***Please do not put your name or address on the questionnaire.***

Please use the enclosed business reply envelope to return your completed questionnaire.

FHFA
1600 Research Blvd, RC B16
Rockville, MD 20850

For any questions about the survey or online access you can call toll free 1-855-339-7877.

Draft

[FR Doc. 2020–07033 Filed 4–2–20; 8:45 am]
BILLING CODE 8070–01–C

FEDERAL RESERVE SYSTEM

Change in Bank Control Notices; Acquisitions of Shares of a Bank or Bank Holding Company

The notificants listed below have applied under the Change in Bank Control Act (Act) (12 U.S.C. 1817(j)) and § 225.41 of the Board's Regulation Y (12 CFR 225.41) to acquire shares of a bank or bank holding company. The factors that are considered in acting on the applications are set forth in paragraph 7 of the Act (12 U.S.C. 1817(j)(7)).

The applications listed below, as well as other related filings required by the Board, if any, are available for immediate inspection at the Federal Reserve Bank indicated. The applications will also be available for inspection at the offices of the Board of Governors. Interested persons may express their views in writing on the standards enumerated in paragraph 7 of the Act.

Comments regarding each of these applications must be received at the Reserve Bank indicated or the offices of the Board of Governors, Ann E. Misback, Secretary of the Board, 20th Street and Constitution Avenue NW, Washington, DC 20551–0001, not later than April 20, 2020.

A. Federal Reserve Bank of St. Louis (David L. Hubbard, Senior Manager) P.O. Box 442, St. Louis, Missouri 63166–2034. Comments can also be sent electronically to *Comments.applications@stls.frb.org:*

1. *Mark A. Richards, Stewardson, Illinois; Beth A. Macke, Marshall, Illinois; Julie E. Krietemeier, Charleston, Illinois; the Florence B. Richards Self Declaration of Trust dated 2/25/03, Stewardson, Illinois, Mark A. Richards, Beth A. Macke, and Julie E. Krietemeier, as co-trustees; and Ashley P. Walker and Allison L. Walden, both of Mattoon, Illinois;* to retain voting shares of Tri-County Bancshares, Inc., and thereby indirectly retain voting shares of First State Bank of Beecher City, both of Beecher City, Illinois.

Board of Governors of the Federal Reserve System, March 31, 2020.

Yao-Chin Chao,

Assistant Secretary of the Board.

[FR Doc. 2020–07055 Filed 4–2–20; 8:45 am]

BILLING CODE P

DEPARTMENT OF HEALTH AND HUMAN SERVICES

Agency for Toxic Substances and Disease Registry

[60Day–20–0055; Docket No. ATSDR–2020–0001]

Proposed Data Collection Submitted for Public Comment and Recommendations

AGENCY: Agency for Toxic Substances and Disease Registry (ATSDR), Department of Health and Human Services (HHS).

ACTION: Notice with comment period.

SUMMARY: The Agency for Toxic Substances and Disease Registry (ATSDR), as part of its continuing effort to reduce public burden and maximize the utility of government information, invites the general public and other Federal agencies the opportunity to comment on a proposed and/or continuing information collection, as required by the Paperwork Reduction Act of 1995. This notice invites comment on an extension of an existing information collection titled ''ATSDR Communication Activities Survey (ACAS)'' which will continue to be used to assess the effectiveness of ATSDR site team members as they engage and inform members of communities in providing effective, clear, and consistent communication and information about protecting communities from environmental hazards.

DATES: ATSDR must receive written comments on or before June 2, 2020.

ADDRESSES: You may submit comments, identified by Docket No. ATSDR–2020–0001 by any of the following methods:

- *Federal eRulemaking Portal: Regulations.gov*. Follow the instructions for submitting comments.
- *Mail:* Jeffrey M. Zirger, Information Collection Review Office, Centers for Disease Control and Prevention, 1600 Clifton Road NE, MS–D74, Atlanta, Georgia 30329.

Instructions: All submissions received must include the agency name and Docket Number. ATSDR will post, without change, all relevant comments to *Regulations.gov*.

Please note: Submit all comments through the Federal eRulemaking portal (*regulations.gov*) or by U.S. mail to the address listed above.

FOR FURTHER INFORMATION CONTACT: To request more information on the proposed project or to obtain a copy of the information collection plan and instruments, contact Jeffrey M. Zirger, Information Collection Review Office, Centers for Disease Control and Prevention, 1600 Clifton Road NE, MS–D74, Atlanta, Georgia 30329; phone: 404–639–7570; email: *omb@cdc.gov.*

SUPPLEMENTARY INFORMATION: Under the Paperwork Reduction Act of 1995 (PRA) (44 U.S.C. 3501–3520), Federal agencies must obtain approval from the Office of Management and Budget (OMB) for each collection of information they conduct or sponsor. In addition, the PRA also requires Federal agencies to provide a 60-day notice in the **Federal Register** concerning each proposed collection of information, including each new proposed collection, each proposed extension of existing collection of information, and each reinstatement of previously approved information collection before submitting the collection to the OMB for approval. To comply with this requirement, we are publishing this notice of a proposed data collection as described below.

The OMB is particularly interested in comments that will help:

1. Evaluate whether the proposed collection of information is necessary for the proper performance of the functions of the agency, including whether the information will have practical utility;
2. Evaluate the accuracy of the agency's estimate of the burden of the proposed collection of information, including the validity of the methodology and assumptions used;
3. Enhance the quality, utility, and clarity of the information to be collected; and
4. Minimize the burden of the collection of information on those who are to respond, including through the use of appropriate automated, electronic, mechanical, or other technological collection techniques or other forms of information technology, *e.g.,* permitting electronic submissions of responses.
5. Assess information collection costs.

Proposed Project

ATSDR Communication Activities Survey (ACAS) (OMB Control No. 0923–0055, Exp. 6/30/2020)—Extension—Agency for Toxic Substances and Disease Registry (ATSDR).

Background and Brief Description

The Agency for Toxic Substances and Disease Registry (ATSDR) serves the public through responsive public health actions to promote healthy and safe environments and to prevent harmful exposures. The agency aims to work effectively with communities in proximity to hazardous waste sites by listening to and understanding their health concerns and seeking their

guidance on where, when, and how to take public health actions.

Community members are key participants in the agency's public health assessment process and should be actively involved in decisions that impact their community. Thus, agency's goals for this extension information collection request (ICR) titled the ''ATSDR Communication Activities Survey (ACAS)'' (OMB Control No. 0923–0055, expiration date 06/30/2020) are to continue to ascertain the effectiveness of, and to assess the differences and the consistency of, the delivery of ATSDR activities and respondent perceptions across sites and over time. ATSDR will use the ACAS to: (1) Determine how effectively it's site teams engage community members; (2) discover how well ATSDR provides effective, clear, and consistent communication and information on how to promote healthy and safe environments; (3) understand whether the agency's activities are helping the communities address environmental issues; and (4) improve ATSDR's activities to make a greater impact within the communities served. During 2018, ATSDR implemented the ATSDR Community Activities Survey (ACAS) to evaluate its risk communication efforts. One hundred and twenty-five surveys were collected from seven sites (62% paper/38% online).

Over the next three years, recruitment will continue to occur at communities where ATSDR and state or local agencies have implemented site activities to address environmental issues. For each engaged community, the ACAS will be used to assess a set of effectiveness indicators for ATSDR site-specific activities about the respondents' involvement, knowledge, satisfaction, observations, and opinions about ATSDR's community engagement and educational outreach efforts to inform communities. The indicators will measure ATSDR effectiveness in the following respondent areas: (1) Their involvement with the site activities; (2) how they received, and prefer to receive, ATSDR information; (3) their knowledge and understanding of ATSDR site activities and how to reduce hazardous exposures; (4) their observations and opinions of ATSDR's role in community preparedness; (5) their self-evaluation on their risk of exposure to possible environmental hazards; (6) their demographic profile; (7) their environmental concerns; and (8) any additional feedback.

ATSDR is seeking a three-year Paperwork Reduction Act clearance for this extension ICR. ATSDR anticipates that approximately six to seven sites will be engaged for feedback per year (or about 20 sites over the next three years). Each year, ATSDR will recruit approximately 167 individuals per year, aged 18 and older, to participate in the ACAS where ATSDR is holding public community meetings. Therefore, respondents will include approximately 24 to 28 community members and agency stakeholders per meeting (six to seven meetings per year). The community members may include, but are not limited to, the general public, community leaders, faith-based leaders, and business leaders. The agency stakeholders may include, but are not limited to, state and local environmental health department employees, such as environmental health assessors, toxicologists, and departmental officials. The mix of respondents will be approximately 75% community members (n=125 per year) and 25% agency stakeholders (n=42 per year).

Trained ATSDR contractors will have a table set up at the entrance of the community meeting where community meeting attendees will pick up a fact sheet which explains what ATSDR does, and the purpose of ATSDR's site activities and the survey. At the end of ATSDR public community meetings, there will be an announcement to ask interested attendees to take the survey. All interested attendees will sign in and provide their contact information, their preferred mode for taking the survey (in-person, online or over the phone), and whether they are a community member or an agency stakeholder. The ACAS will preferably be self-administered right after the public community meetings. If this is not a convenient time for the respondent, the ACAS may be completed online or by phone. We estimate that approximately 80% of respondents will choose the self-administered ACAS, 15% will choose the online ACAS, and 5% will choose the telephone ACAS.

There are no costs to the respondents other than their time. There are no changes to the estimated number of respondents, and the total annual time burden requested remains at 49 hours per year.

ESTIMATED ANNUALIZED BURDEN HOURS

Type of respondents	Form name	Number of respondents	Number of responses per respondent	Average burden per response (in hours.)	Total burden (in hours.)
Community Members	Sign In Sheet	125	1	2/60	4
	Hardcopy ACAS	100	1	15/60	25
	Online ACAS	19	1	15/60	5
	Telephone ACAS	6	1	15/60	2
Agency Stakeholders	Sign In Sheet	42	1	2/60	1
	Hardcopy ACAS	34	1	15/60	9
	Online ACAS	6	1	15/60	2
	Telephone ACAS	2	1	15/60	1
Total					49

Jeffrey M. Zirger,

Lead, Information Collection Review Office, Office of Scientific Integrity, Office of Science, Centers for Disease Control and Prevention.

[FR Doc. 2020–06940 Filed 4–2–20; 8:45 am]

BILLING CODE 4163–18–P

DEPARTMENT OF HEALTH AND HUMAN SERVICES

Centers for Disease Control and Prevention

[30Day–20–1030]

Agency Forms Undergoing Paperwork Reduction Act Review

In accordance with the Paperwork Reduction Act of 1995, the Centers for Disease Control and Prevention (CDC) has submitted the information collection request titled Developmental Studies to Improve the National Health Care Surveys (OMB Control No. 0920–1030, Exp. 04/30/2020), to the Office of Management and Budget (OMB) for review and approval. CDC previously published a ''Proposed Data Collection Submitted for Public Comment and Recommendations'' notice on January 23, 2020 to obtain comments from the public and affected agencies. CDC did not receive comments related to the previous notice. This notice serves to allow an additional 30 days for public and affected agency comments.

CDC will accept all comments for this proposed information collection project. The Office of Management and Budget is particularly interested in comments that:

(a) Evaluate whether the proposed collection of information is necessary for the proper performance of the functions of the agency, including whether the information will have practical utility;

(b) Evaluate the accuracy of the agencies estimate of the burden of the proposed collection of information, including the validity of the methodology and assumptions used;

(c) Enhance the quality, utility, and clarity of the information to be collected;

(d) Minimize the burden of the collection of information on those who are to respond, including, through the use of appropriate automated, electronic, mechanical, or other technological collection techniques or other forms of information technology, *e.g.,* permitting electronic submission of responses; and

(e) Assess information collection costs.

To request additional information on the proposed project or to obtain a copy of the information collection plan and instruments, call (404) 639–7570. Comments and recommendations for the proposed information collection should be sent within 30 days of publication of this notice to *www.reginfo.gov/public/do/PRAMain* Find this particular information collection by selecting ''Currently under 30-day Review—Open for Public Comments'' or by using the search function. Direct written comments and/or suggestions regarding the items contained in this notice to the Attention: CDC Desk Officer, Office of Management and Budget, 725 17th Street NW, Washington, DC 20503 or by fax to (202) 395–5806. Provide written comments within 30 days of notice publication.

Proposed Project

Developmental Studies to Improve the National Health Care Surveys (OMB Control No. 0920–1030, Exp. 04/30/2020)—Extension—National Center for Health Statistics (NCHS), Centers for Disease Control and Prevention (CDC).

Background and Brief Description

Section 306 of the Public Health Service (PHS) Act (42 U.S.C. 242k), as amended, authorizes the Secretary of Health and Human Services (DHHS), acting through the Division of Health Care Statistics (DHCS) within NCHS, shall collect statistics on the extent and nature of illness and disability of the population of the United States.

The DHCS conducts the National Health Care Surveys, a family of nationally representative surveys of encounters and health care providers in inpatient, ambulatory, and long-term care settings. This information collection request (ICR) is for the extension of a generic clearance to conduct developmental studies to improve this family of surveys. This three-year clearance period will include studies to evaluate and improve upon existing survey design and operations, as well as to examine the feasibility of, and address challenges that may arise with, future expansions of the National Health Care Surveys.

Specifically, this request covers developmental research with the following aims: (1) To explore ways to refine and improve upon existing survey designs and procedures; and (2) to explore and evaluate proposed survey designs and alternative approaches to data collection. The goal of these research studies is to further enhance DHCS existing and future data collection protocols to increase research capacity and improve health care data quality for the purpose of monitoring public health and well-being at the national, state and local levels, thereby informing the health policy decision-making process. The information collected through this generic ICR will not be used to make generalizable statements about the population of interest or to inform public policy; however, methodological findings may be reported.

This generic ICR would include studies conducted in person, via the telephone or internet, and by postal or electronic mail. Methods covered would include qualitative (*e.g.,* usability testing, focus groups, ethnographic studies, and respondent debriefing questionnaires) and/or quantitative (*e.g.,* pilot tests, pre-tests and split sample experiments) research methodologies. Examples of studies to improve existing survey designs and procedures may include evaluation of incentive approaches to improve recruitment and increase participation rates; testing of new survey items to obtain additional data on providers, patients, and their encounters while minimizing misinterpretation and human error in data collection; testing data collection in panel surveys; triangulating and validating survey responses from multiple data sources; assessment of the feasibility of data retrieval; and development of protocols that will locate, identify, and collect accurate survey data in the least labor-intensive and burdensome manner at the sampled practice site.

To explore and evaluate proposed survey designs and alternative approaches to collecting data, especially with the nationwide adoption of electronic health records, studies may expand the evaluation of data extraction of electronic health records and submission via continuity of care documentation to small/mid-size/large medical providers and hospital networks, managed care health plans, prison-hospitals, and other inpatient, outpatient, and long-term care settings that are currently either in-scope or out-of-scope of the National Health Care Surveys. Research on feasibility, data quality and respondent burden also may be carried out in the context of developing new surveys of health care providers and establishments that are currently out-of-scope of the National Health Care Surveys.

Specific motivations for conducting developmental studies include: (1) Within the National Ambulatory Medical Care Survey (NAMCS), new clinical groups may be expanded to include dentists, psychologists, podiatrists, chiropractors, optometrists), mid-level providers (*e.g.,* physician assistants, advanced practice nurses, nurse practitioners, certified nurse midwives) and allied-health professionals (*e.g.,* certified nursing aides, medical assistants, radiology technicians, laboratory technicians, pharmacists, dieticians/nutritionists). Current sampling frames such as those

from the American Medical Association may be obtained and studied, as well as frames that are not currently in use by NAMCS, such as state and organizational listings of other licensed providers. (2) Within the National Study of Long-Term Care Providers, additional new frames may be sought and evaluated and data items from home care agencies, long-term care hospitals, and facilities exclusively serving individuals with intellectual/developmental disability may be tested. Similarly, data may be obtained from lists compiled by states and other organizations. Data about the facilities as well as residents and their visits will be investigated. (3) In the inpatient and outpatient care settings, the National Hospital Care Survey (NHCS) and the National Hospital Ambulatory Medical Care Survey (NHAMCS) may investigate the addition of facility and patient information especially as it relates to insurance and electronic medical records.

Projects under development or in the planning stages include two projects related to opioid use: One that will investigate adding questions to NAMCS on physician understanding of guidelines for opioid use and one that will test the validation of an algorithm for identifying opioid-involved hospital visits. Another study will develop a Hospital-Based Victim Services Frame.

The National Health Care Surveys collect critical, accurate data that are used to produce reliable national estimates—and in recent years (when budget allows), state-level estimates—of clinical services and of the providers who delivered those services in inpatient, outpatient, ambulatory, and long-term care settings. The data from these surveys are used by providers, policy makers and researchers to address important topics of interest, including the quality and disparities of care among populations, epidemiology of medical conditions, diffusion of technologies, effects of policies and practice guidelines, and changes in health care over time. Research studies need to be conducted to improve existing and proposed survey design and procedures of the National Health Care Surveys, as well as to evaluate alternative data collection approaches particularly due to the expansion of electronic health record use, and to develop new sample frames of currently out-of-scope providers and settings of care. There is no cost to respondents other than their time to participate. Average burdens are designed to cover 15–40 min interviews as well as 90-minute focus groups, longer on-site visits, and situations where organizations may be preparing electronic data files. The total estimated annualized burden hours are 7,085.

TABLE 1—ESTIMATED ANNUALIZED BURDEN HOURS

Type of respondents	Form name	Number of respondents	Number of responses per respondent	Average burden per response (in hours)
Health Care Providers and Business entities	Interviews, surveys, focus groups, experiments (in person, phone, internet, postal/electronic mail).	6,667	1	1
Health Care Providers, State/local government agencies, and business entities.	Interviews, surveys, focus groups, experiments (in person, phone, internet, postal/electronic mail).	167	1	2.5

Jeffrey M. Zirger,

Lead, Information Collection Review Office, Office of Scientific Integrity, Office of Science, Centers for Disease Control and Prevention.

[FR Doc. 2020–06947 Filed 4–2–20; 8:45 am]

BILLING CODE 4163–18–P

DEPARTMENT OF HEALTH AND HUMAN SERVICES

Centers for Disease Control and Prevention

[60Day–20–0572; Docket No. CDC–2020–0034]

Proposed Data Collection Submitted for Public Comment and Recommendations

AGENCY: Centers for Disease Control and Prevention (CDC), Department of Health and Human Services (HHS).

ACTION: Notice with comment period.

SUMMARY: The Centers for Disease Control and Prevention (CDC), as part of its continuing effort to reduce public burden and maximize the utility of government information, invites the general public and other Federal agencies the opportunity to comment on a proposed and/or continuing information collection, as required by the Paperwork Reduction Act of 1995. This notice invites comment on a proposed information collection project titled Possession, Use, and Transfer of Select Agents and Toxins (42 CFR part 73). This information collection intends to support the Public Health Safety and Bioterrorism Preparedness and Response Act of 2002 and ensure select agents or toxins are managed appropriately to prevent any threats to human health or safety. Data will be used to fulfill the requirements promulgated by HHS under this part and also subject to corresponding regulations promulgated by USDA.

DATES: CDC must receive written comments on or before June 2, 2020.

ADDRESSES: You may submit comments, identified by Docket No. CDC–20–0034 by any of the following methods:

- *Federal eRulemaking Portal: Regulations.gov.* Follow the instructions for submitting comments.
- *Mail:* Jeffrey M. Zirger, Information Collection Review Office, Centers for Disease Control and Prevention, 1600 Clifton Road, NE, MS–D74, Atlanta, Georgia 30329.

Instructions: All submissions received must include the agency name and Docket Number. CDC will post, without change, all relevant comments to *Regulations.gov*.

Please note: Submit all comments through the Federal eRulemaking portal (*regulations.gov*) or by U.S. mail to the address listed above.

FOR FURTHER INFORMATION CONTACT: To request more information on the proposed project or to obtain a copy of the information collection plan and instruments, contact Jeffrey M. Zirger, Information Collection Review Office, Centers for Disease Control and Prevention, 1600 Clifton Road NE, MS–D74, Atlanta, Georgia 30329; phone: 404–639–7570; Email: *omb@cdc.gov.*

SUPPLEMENTARY INFORMATION: Under the Paperwork Reduction Act of 1995 (PRA) (44 U.S.C. 3501–3520), Federal agencies must obtain approval from the Office of Management and Budget (OMB) for each

collection of information they conduct or sponsor. In addition, the PRA also requires Federal agencies to provide a 60-day notice in the **Federal Register** concerning each proposed collection of information, including each new proposed collection, each proposed extension of existing collection of information, and each reinstatement of previously approved information collection before submitting the collection to the OMB for approval. To comply with this requirement, we are publishing this notice of a proposed data collection as described below.

The OMB is particularly interested in comments that will help:

1. Evaluate whether the proposed collection of information is necessary for the proper performance of the functions of the agency, including whether the information will have practical utility;
2. Evaluate the accuracy of the agency's estimate of the burden of the proposed collection of information, including the validity of the methodology and assumptions used;
3. Enhance the quality, utility, and clarity of the information to be collected; and
4. Minimize the burden of the collection of information on those who are to respond, including through the use of appropriate automated, electronic, mechanical, or other technological collection techniques or other forms of information technology, *e.g.,* permitting electronic submissions of responses.
5. Assess information collection costs.

Proposed Project

Possession, Use, and Transfer of Select Agents and Toxins (OMB Control No. 0920–0576)—Revision—Center for Preparedness and Response (CPR), Centers for Disease Control and Prevention (CDC).

Background and Brief Description

Subtitle A of the *Public Health Security and Bioterrorism Preparedness and Response Act of 2002, (42 U.S.C. 262a),* requires the United States Department of Health and Human Services (HHS) to regulate the possession, use, and transfer of biological agents or toxins that have the potential to pose a severe threat to public health and safety (select agents and toxins). Subtitle B of the Public Health Security and Bioterrorism Preparedness and Response Act of 2002 (which may be cited as the *Agricultural Bioterrorism Protection Act of 2002), (7 U.S.C. 8401),* requires the United States Department of Agriculture (USDA) to regulate the possession, use, and transfer of biological agents or toxins that have the potential to pose a severe threat to animal or plant health, or animal or plant products (select agents and toxins). Accordingly, HHS and USDA have promulgated regulations requiring individuals or entities that possess, use, or transfer select agents and toxins to register with the CDC or the Animal and Plant Health Inspection Service (APHIS). See 42 CFR part 73, 7 CFR part 331, and 9 CFR part 121 (the select agent regulations). The Federal Select Agent Program (FSAP) is the collaboration of the CDC, Division of Select Agents and Toxins (DSAT) and the APHIS Agriculture Select Agent Services (AgSAS) to administer the select agent regulations in a manner to minimize the administrative burden on persons subject to the select agent regulations. The FSAP administers the select agents regulations in close coordination with the Federal Bureau of Investigation's Criminal Justice Information Services (CJIS). Accordingly, CDC and APHIS have adopted an identical system to collect information for the possession, use, and transfer of select agents and toxins.

CDC is requesting OMB approval to continue to collect information under the select agent regulations through the use of five forms: (1) Application for Registration for Possession. Use, and Transfer of Select Agents and Toxins (APHIS/CDC Form 1); (2) Request to Transfer Select Agents or Toxins (APHIS/CDC Form 2); (3) Incident Notification and Reporting (Theft, Loss, or Release) (APHIS/CDC Form 3); (4) Reporting the Identification of a Select Agent or Toxin (APHIS/CDC Form 4); and (5) Request for Exemption of Select Agents and Toxins for an Investigational Product (APHIS/CDC Form 5).

An entity may amend its registration (42 CFR 73.7(h)(1)) if any changes occur to the information previously submitted to CDC. When applying for an amendment to a certificate of registration, an entity would complete the relevant portion of the application package (APHIS/CDC Form 1).

Besides the forms listed above, there is no standard form for the following information:

1. An individual or entity may request an exclusion from the requirements of the select agent regulations of an attenuated strain of a select agent or a select toxin modified to be less potent or toxic. (42 CFR 73.3(e) and 73.4(e)).
2. Annual inspections that are conducted by the entity must be documented. (42 CFR 73.9(a)(6)).
3. An individual's security risk assessment may be expedited upon written request by a Responsible Official and a showing of good cause. (42 CFR 73.10(f)).
4. An individual or entity may request approval to perform a ''restricted experiment'' (42 CFR 73.13).
5. An individual or entity must develop and implement a written security plan, biosafety plan, and incident response plan (42 CFR 73.11(a), 42 CFR 73.12(a), and 42 CFR 73.14(a)).
6. The Responsible Official at the must ensure a record of the training for each individual with access to select agents and toxins and each escorted individual is maintained (42 CFR 73.15(d)).
7. An individual or entity may appeal a denial, revocation, or suspension of registration. (42 CFR 73.20(a)).
8. An individual may appeal a denial, limitation, or revocation of access approval. (42 CFR 73.20(b)).

The total estimated annualized burden for all data collection was calculated using the 2018 Annual Report of the Federal Select Agent Program available at *https://www.selectagents.gov/annualreport2018.html* or FSAP IT system and is estimated as 4465 hours. Information will be collected through FSAP IT system, fax, email and hard copy mail from respondents. Upon OMB approval, CDC will begin use of the revised forms in October 2020 through October 2023. There is no cost to the respondents.

ESTIMATED ANNUALIZED BURDEN HOURS

Section	Form name	Number of respondents	Number of responses per respondent	Average burden per response (in hours)	Total burden hours
Sections 3 & 4	Request for Exclusions	1	1	1	1
Sections 5 & 6	Report of Identification of a Select Agent or Toxin	1,181	1	1	1,181
Sections 5 & 6	Request of Exemption	1	1	1	1

ESTIMATED ANNUALIZED BURDEN HOURS—Continued

Section	Form name	Number of respondents	Number of responses per respondent	Average burden per response (in hours)	Total burden hours
Section 7	Application for Registration	3	1	5	15
Section 7	Amendment to a Certificate of Registration	253	5	1	1,265
Section 9	Documentation of self-inspection	253	1	1	253
Section 10	Request for Expedited Review	1	1	0.5	1
Section 11	Security Plan	253	1	1	253
Section 12	Biosafety Plan	253	1	1	253
Section 13	Request Regarding a Restricted Experiment	1	1	2	2
Section 14	Incident Response Plan	253	1	1	253
Section 15	Training	253	1	1	252
Section 16	Request to Transfer Select Agents and Toxins	253	1	1.5	380
Section 17	Records	253	1	0.5	127
Section 19	Notification of Theft, Loss, or Release	201	1	1	201
Section 20	Administrative Review	28	1	1	28
Total					4465

Jeffrey M. Zirger,

Lead, Information Collection Review Office, Office of Scientific Integrity, Office of Science, Centers for Disease Control and Prevention.

[FR Doc. 2020–06948 Filed 4–2–20; 8:45 am]

BILLING CODE 4163–18–P

DEPARTMENT OF HEALTH AND HUMAN SERVICES

Centers for Disease Control and Prevention

[30Day–20–0995]

Agency Forms Undergoing Paperwork Reduction Act Review

In accordance with the Paperwork Reduction Act of 1995, the Centers for Disease Control and Prevention (CDC) has submitted the information collection request titled ''National Network of Sexually Transmitted Diseases Clinical Prevention Training Centers'' to the Office of Management and Budget (OMB) for review and approval. CDC previously published a ''Proposed Data Collection Submitted for Public Comment and Recommendations'' notice on November 4, 2019 to obtain comments from the public and affected agencies. CDC did not receive comments related to the previous notice. This notice serves to allow an additional 30 days for public and affected agency comments.

CDC will accept all comments for this proposed information collection project. The Office of Management and Budget is particularly interested in comments that:

(a) Evaluate whether the proposed collection of information is necessary for the proper performance of the functions of the agency, including whether the information will have practical utility;

(b) Evaluate the accuracy of the agencies estimate of the burden of the proposed collection of information, including the validity of the methodology and assumptions used;

(c) Enhance the quality, utility, and clarity of the information to be collected;

(d) Minimize the burden of the collection of information on those who are to respond, including, through the use of appropriate automated, electronic, mechanical, or other technological collection techniques or other forms of information technology, *e.g.,* permitting electronic submission of responses; and

(e) Assess information collection costs.

To request additional information on the proposed project or to obtain a copy of the information collection plan and instruments, call (404) 639–7570. Comments and recommendations for the proposed information collection should be sent within 30 days of publication of this notice to *www.reginfo.gov/public/do/PRAMain*. Find this particular information collection by selecting ''Currently under 30-day Review—Open for Public Comments'' or by using the search function. Direct written comments and/or suggestions regarding the items contained in this notice to the Attention: CDC Desk Officer, Office of Management and Budget, 725 17th Street NW, Washington, DC 20503 or by fax to (202) 395–5806. Provide written comments within 30 days of notice publication.

Proposed Project

National Network of Sexually Transmitted Diseases Clinical Prevention Training Centers (OMB No. 0920–0995, Expiration 05/31/2020)—Extension—National Center for HIV/AIDS, Viral Hepatitis, STD, and TB Prevention (NCHHSTP), Centers for Disease Control and Prevention (CDC).

Background and Brief Description

The Centers for Disease Control and Prevention (CDC), Division of STD Prevention requests an extension and three-year approval of the currently approved information collection request that comprises the NNPTC Abbreviated Health Professional Application for Training (NNPTC Abbreviated HPAT). This extension will allow the NNPTC Abbreviated HPAT to continue to serve as the official training application form used for training activities conducted by the Sexually Transmitted Disease (STD) Prevention Training Centers' (PTCs) grantees funded by the (CDC). The PTCs are funded by CDC/Division of STD Prevention (DSTDP) to provide training and capacity-building that includes information, training, technical assistance and technology transfer.

The PTCs offer classroom and experiential training, web-based training, clinical consultation, and capacity building assistance to maintain and enhance the capacity of health care professionals to control and prevent STDs and HIV. The NNPTC Abbreviated HPAT is used to monitor and evaluate performance and reach of grantees that offer STD and HIV prevention training, training assistance, and capacity building assistance to physicians, nurses, disease intervention specialists, health educators, etc. During the previously approved three-year period, data was collected to monitor and evaluate the performance of the NNTPC grantees and the NNPTC program. This data provided the NNPTC with

necessary information to improve program processes and operations in order to improve the quality of STD prevention and treatment.

The 4,500 respondents (who will engage in a total of 11,769 respondent instances) represent an average of the number of health professionals trained by PTC grantees during 2015. The evaluation instruments collect data on the impact of the training by the NNPTC. This data collection is necessary to assess and evaluate the performance of the grantees in delivering training, and to standardize training registration processes across the PTCs. The NNPTC Abbreviated HPAT allows CDC grantees to use a single instrument when collecting demographic data from its training and capacity building participants, regarding their: (1) Occupations, professions, and functional roles; (2) principal employment settings; (3) location of their work settings; and (4) programmatic and population foci of their work. The NNPTC Abbreviated HPAT takes approximately three minutes to complete. This data collection provides CDC with information to determine whether the training grantees are reaching their target audiences in terms of provider type, the types of organizations in which participants work, the focus of their work and the population groups and geographic areas served.

The evaluation instruments are used to assess training and capacity-building outcomes (knowledge, confidence, intention to use information, actual changes made as a result of training) immediately after and again 90 days after training events. The evaluation instruments vary based on the type of training offered and take between approximately 16 minutes to complete (for intensive multi-day trainings) to two minutes to complete (for short didactic or webinar sessions).

The CDC's Funding Opportunity Announcement PS 14–1407, National Network of Sexually Transmitted Diseases Clinical Prevention Training Centers (NNPTC) requires the collection of national demographic information on grantees' trainees and national evaluation outcomes. There are no costs to respondents other than their time. The estimated annualized burden hours for this data collection are 502 hours.

ESTIMATED ANNUALIZED BURDEN HOURS

Type of respondent	Form name	Number of respondents	Number responses per respondent	Average burden per response (in hours)
Healthcare Professionals	NNPTC Abbreviated Health Professional Application for Training (HPAT).	4,500	1	3/60
Healthcare Professionals	Intensive Complete Post-Course Evaluation	116	1	16/60
	Intensive Complete Long-Term Evaluation	36	1	10/60
Healthcare Professionals	Intensive-Didactic Post-Course Evaluation	166	1	10/60
	Intensive-Didactic Long-Term Evaluation	58	1	7/60
Healthcare Professionals	Practicum Post-Course Evaluation	70	1	4/60
	Practicum Long-Term Evaluation	20	1	3/60
Healthcare Professionals	Wet Mount Post-Course Evaluation	40	1	3/60
	Wet Mount Long-Term Evaluation	15	1	2/60
Healthcare Professionals	STD Tx Guidelines Complete Post-Course Evaluation	548	1	6/60
	STD Tx Guidelines Complete Long-Term Evaluation	180	1	5/60
Healthcare Professionals	Short Guidelines Post-Course Evaluation	500	1	3/60
	Short Guidelines Long-Term Evaluation	160	1	3/60
Healthcare Professionals	Basic Post-Course Evaluation	150	1	2/60
	Basic Long-Term Evaluation	50	1	2/60
Healthcare Professionals	Immediate Post-Course email invitation	4,500	1	1/60
Healthcare Professionals	3 Month Long-Term email invitation	660	1	1/60

Jeffrey M. Zirger,

Lead, Information Collection Review Office, Office of Scientific Integrity, Office of Science, Centers for Disease Control and Prevention.

[FR Doc. 2020–06943 Filed 4–2–20; 8:45 am]

BILLING CODE 4163–18–P

DEPARTMENT OF HEALTH AND HUMAN SERVICES

Food and Drug Administration

[Docket No. FDA–2019–N–5971]

Agency Information Collection Activities; Submission for Office of Management and Budget Review; Comment Request; Recommendations To Reduce the Risk of Transfusion-Transmitted of Infection in Whole Blood and Blood Components; Agency Guidance

AGENCY: Food and Drug Administration, HHS.

ACTION: Notice.

SUMMARY: The Food and Drug Administration (FDA) is announcing that a proposed collection of information has been submitted to the Office of Management and Budget (OMB) for review and clearance under the Paperwork Reduction Act of 1995 (PRA).

DATES: Submit written comments (including recommendations) on the collection of information by May 4, 2020.

ADDRESSES: To ensure that comments on the information collection are received, OMB recommends that written comments be submitted to *https://www.reginfo.gov/public/do/PRAMain.* Find this particular information collection by selecting ''Currently under Review—Open for Public Comments'' or by using the search function. The OMB control number for this information collection is 0910–0681. Also include the FDA docket number found in

brackets in the heading of this document.

FOR FURTHER INFORMATION CONTACT: Domini Bean, Office of Operations, Food and Drug Administration, Three White Flint North, 10A–12M, 11601 Landsdown St., North Bethesda, MD 20852, 301–796–5733, *PRAStaff@fda.hhs.gov.*

SUPPLEMENTARY INFORMATION: In compliance with 44 U.S.C. 3507, FDA has submitted the following proposed collection of information to OMB for review and clearance.

Recommendations To Reduce the Risk of Transfusion-Transmitted Infection in Whole Blood and Blood Components; Agency Guidance

OMB Control Number 0910–0681—Extension

Under § 630.3(h) (21 CFR 630.3(h)), a list is set forth of relevant transfusion-transmitted infections (RTTIs) (§ 630.3(h)(1)) and the conditions under which a transfusion-transmitted infection (TTI) would meet the definition of an RTTI (§ 630.3(h)(2)). The list of RTTIs under § 630.3(h)(1) includes, among other things, the following: *Trypanosoma cruzi* (Chagas), Creutzfeldt Jacob Disease (CJD)/variant Creutzfeldt Jacob Disease (vCJD), *plasmodium* species (malaria), and West Nile virus. The RTTIs FDA has identified thus far under § 630.3(h)(2) include Zika virus and babesiosis. In addition, FDA has determined Ebola virus to be a TTI identified under § 630.3(*l*). FDA has issued several guidance documents with recommendations regarding the RTTIs or TTIs including Chagas, babesiosis, Zika virus, West Nile virus, Ebola virus, malaria, CJD and vCJD, human immunodeficiency virus (HIV) and human T-lymphotropic virus, types I and II (HTLV).

The Chagas, babesiosis, Zika virus, West Nile virus, and HTLV guidance documents provide recommendations for consignee and physician notification relating to donors that tested reactive for these infections.

In addition, a blood establishment may receive information from a donor following collection that reveals the donor had a risk factor for an RTTI or TTI at the time of collection and should have been deferred for the risk factor. FDA has recommended, in the following guidance documents, that such a blood collection establishment notify the consignee regarding the distributed blood components that are potentially at-risk for an RTTI or TTI. In some cases, we recommend that if the blood was transfused, the consignee notify the transfusion recipient's physician of record regarding the potential risk. This recommendation is included in Ebola virus, malaria, CJD and vCJD, and HIV guidance documents. These guidance documents are available from our website at *https://www.fda.gov/vaccines-blood-biologics/biologics-guidances/blood-guidances.*

In the **Federal Register** of January 7, 2020 (85 FR 716), we published a 60-day notice requesting public comment on the proposed collection of information. For purposes of estimating burden under the PRA, we provided an estimate of one response and one burden hour annually. As we discussed in our 60-day notice, although such notifications are rare, we believe that these notification practices would be part of the usual and customary business practice for blood establishments and consignees in addressing the RTTIs or TTIs under the regulations. In addition, we believe respondents would have already developed standard operating procedures for notifying consignees and the recipient's physician of record regarding distributed blood components potentially at risk for a TTI. No comments were received in response to our 60-day notice, and we therefore retain this estimate. As other relevant transfusion-transmitted infections are determined under § 630.3, we may continue to issue guidance accordingly, and, if approved, intend the information collections to be included under this OMB control number.

Based on a review of the information collection since our last request for OMB approval, we have made no adjustments to our burden estimate. These guidance documents, as applicable, also refer to previously approved FDA collections of information. The collections of information in 21 CFR parts 601 and 640, and Form FDA 356h have been approved under OMB control number 0910–0338; the collections of information in 21 CFR parts 606 and 630 have been approved under OMB control number 0910–0116; the collections of information in 21 CFR 606.171 have been approved under OMB control number 0910–0458.

Dated: March 24, 2020.

Lowell J. Schiller,

Principal Associate Commissioner for Policy.

[FR Doc. 2020–06986 Filed 4–2–20; 8:45 am]

BILLING CODE 4164–01–P

DEPARTMENT OF HEALTH AND HUMAN SERVICES

Food and Drug Administration

[Docket No. FDA–2016–N–2066]

Agency Information Collection Activities; Submission for Office of Management and Budget Review; Comment Request; Certification of Identity for Freedom of Information Act and Privacy Act Requests

AGENCY: Food and Drug Administration, HHS.

ACTION: Notice.

SUMMARY: The Food and Drug Administration (FDA) is announcing that a proposed collection of information has been submitted to the Office of Management and Budget (OMB) for review and clearance under the Paperwork Reduction Act of 1995.

DATES: Submit written comments (including recommendations) on the collection of information by May 4, 2020.

ADDRESSES: To ensure that comments on the information collection are received, OMB recommends that written comments be submitted to *https://www.reginfo.gov/public/do/PRAMain.* Find this particular information collection by selecting ''Currently under Review—Open for Public Comments'' or by using the search function. The OMB control number for this information collection is 0910–0832. Also include the FDA docket number found in brackets in the heading of this document.

FOR FURTHER INFORMATION CONTACT: Domini Bean, Office of Operations, Food and Drug Administration, Three White Flint North, 10A–12M, 11601 Landsdown St., North Bethesda, MD 20852, 301–796–5733, *PRAStaff@fda.hhs.gov.*

SUPPLEMENTARY INFORMATION: In compliance with 44 U.S.C. 3507, FDA has submitted the following proposed collection of information to OMB for review and clearance.

Certification of Identity; Form FDA 3975

OMB Control Number 0910–0832—Extension

This information collection supports Form FDA 3975 entitled ''Certification of Identity,'' which is used by FDA to identify an individual requesting a particular record under the Freedom of Information Act (FOIA) and the Privacy Act. The form is available from our website at: *https://www.fda.gov/*

RegulatoryInformation/FOI/default.htm, although if an individual requests one, we will send it by mail or email. The form is required only if an individual makes an FOIA request or Privacy Act request for records about himself and has not provided sufficient assurances of identity in the incoming FOIA or Privacy Act request.

The FOIA grants the public a right to access Federal records not normally prepared for public distribution. The Privacy Act grants a right of access to members of the public who seek access to one's own records that are maintained in an Agency's system of records (*i.e.,* the records are retrieved by that individual's name or other personal identifier). The statutes overlap, and individuals who request their own records are processed under both statutes. The Agency may need to confirm that the individual making the FOIA or Privacy Act request is indeed the same person named in the Agency records. Respondents to the information collection are asked for certain information including name, citizenship status, social security number, address, date of birth, place of birth, signature, and date of signature.

In the **Federal Register** of November 22, 2019 (84 FR 64539), we published a 60-day notice requesting public comment on the proposed collection of information. One comment was received stating it was important that FDA retain the information collection to help protect against potential identity fraud. The comment also suggested that the associated burden for completing and submitting Form FDA 3975 may be lower than estimated, but did not provide alternative figures for us to consider. We therefore retain our burden estimate, which is as follows:

TABLE 1—ESTIMATED ANNUAL REPORTING BURDEN [1]

FDA form No.	Number of respondents	Number of responses per respondent	Total annual responses	Average burden per response	Total hours
3975; Certification of Identity	50	1	50	0.17 (10 minutes)	8.5

[1] There are no capital costs or operating and maintenance costs associated with this collection of information.

Based on Agency data, we have received no more than 50 submissions since establishing the collection in 2017.

Dated: March 26, 2020.

Lowell J. Schiller,

Principal Associate Commissioner for Policy.

[FR Doc. 2020–06996 Filed 4–2–20; 8:45 am]

BILLING CODE 4164–01–P

DEPARTMENT OF HEALTH AND HUMAN SERVICES

Food and Drug Administration

[Docket No. FDA–2013–N–0731]

Agency Information Collection Activities; Submission for Office of Management and Budget Review; Comment Request; Human Cells, Tissues, and Cellular and Tissue-Based Products: Establishment Registration and Listing; Eligibility Determination for Donors; and Current Good Tissue Practice

AGENCY: Food and Drug Administration, HHS.

ACTION: Notice.

SUMMARY: The Food and Drug Administration (FDA) is announcing that a proposed collection of information has been submitted to the Office of Management and Budget (OMB) for review and clearance under the Paperwork Reduction Act of 1995.

DATES: Submit written comments (including recommendations) on the collection of information by May 4, 2020.

ADDRESSES: To ensure that comments on the information collection are received, OMB recommends that written comments be submitted to *https://www.reginfo.gov/public/do/PRAMain.* Find this particular information collection by selecting ''Currently under Review—Open for Public Comments'' or by using the search function. The OMB control number for this information collection is 0910–0543. Also include the FDA docket number found in brackets in the heading of this document.

FOR FURTHER INFORMATION CONTACT: Domini Bean, Office of Operations, Food and Drug Administration, Three White Flint North, 10A–12M, 11601 Landsdown St., North Bethesda, MD 20852, 301–796–5733, *PRAStaff@fda.hhs.gov.*

SUPPLEMENTARY INFORMATION: In compliance with 44 U.S.C. 3507, FDA has submitted the following proposed collection of information to OMB for review and clearance.

Human Cells, Tissues, and Cellular and Tissue-Based Products: Establishment Registration and Listing; Eligibility Determination for Donors; and Current Good Tissue Practice

OMB Control Number 0910–0543–Extension

Under section 361 of the Public Health Service Act (the PHS Act) (42 U.S.C. 264), FDA may issue and enforce regulations necessary to prevent the introduction, transmission, or spread of communicable diseases between the States or possessions or from foreign countries into the States. As derivatives of the human body, all human cells, tissues, and cellular and tissue-based products (HCT/Ps) pose some risk of carrying pathogens that could potentially infect recipients or handlers. FDA has issued regulations related to HCT/Ps involving electronic establishment registration and listing using an electronic system, eligibility determination for donors, and current good tissue practice (CGTP).

I. Electronic Establishment Registration and Listing

The regulations in part 1271 (21 CFR part 1271) require domestic and foreign establishments that recover, process, store, label, package, or distribute an HCT/P regulated solely under section 361 of the PHS Act and described in § 1271.10(a) (21 CFR 1271.10(a)), or that perform screening or testing of the cell or tissue donor, to register electronically with FDA (§§ 1271.1(a) (21 CFR 1271.1(a)) and 1271.10(b)(1)) and submit a list electronically of each HCT/P manufactured (§§ 1271.1(a) and 1271.10(b)(2)). Section 1271.21(a) (21 CFR 1271.21(a)) requires an establishment to follow certain procedures for initial registration and listing of HCT/Ps, and § 1271.25(a) and (b) (21 CFR 1271.25(a) and (b)) identify the required initial registration and HCT/P listing information. Section 1271.21(b), in brief, requires an annual update of the establishment registration.

Section 1271.21(c)(ii) requires establishments to submit HCT/P listing updates if a change as described in § 1271.25(c) has occurred. Section 1271.25(c) identifies the required HCT/P listing update information. Section 1271.26 (21 CFR 1271.26) requires establishments to submit an amendment if ownership or location of the establishment changes, or if there is a change in the U.S. agent's name, address, telephone number, or email address. FDA requires the use of an electronic registration and listing system entitled ''eHCTERs'' (Electronic Human Cell and Tissue Establishment Registration System) to submit the required information (§§ 1271.10, 1271.21, 1271.25, and 1271.26)). Under § 1271.23 (21 CFR 1271.23), manufacturers may request a waiver from the requirements in 21 CFR 1271.22 that information must be provided to FDA in electronic format.

II. Eligibility Determination for Donors

In brief, FDA requires certain HCT/P establishments described in § 1271.1(b) to determine donor eligibility based on donor screening and testing for relevant communicable disease agents and diseases except as provided under 21 CFR 1271.90. The documented determination of a donor's eligibility is made by a responsible person as defined in § 1271.3(t) (21 CFR 1271.3(t)) and is based on the results of required donor screening, which includes a donor medical history interview (defined in § 1271.3(n)), and testing (§ 1271.50(a) (21 CFR 1271.50(a)). Certain records must accompany an HCT/P once the donor-eligibility determination has been made (§ 1271.55(a) (21 CFR 1271.55(a))). This requirement applies both to an HCT/P from a donor who is determined to be eligible as well as to an HCT/P from a donor who is determined to be ineligible or where the donor-eligibility determination is not complete if there is a documented urgent medical need, as defined in § 1271.3(u) (§§ 1271.60 and 1271.65 (21 CFR 1271.60 and 1271.65)). Once the donor-eligibility determination has been made, the HCT/P must be accompanied by a summary of records used to make the donor-eligibility determination (§ 1271.55(b)), and a statement whether, based on the results of the screening and testing of the donor, the donor is determined to be eligible or ineligible (§ 1271.55(a)(2)). Records used in determining the eligibility of a donor, *i.e.,* results and interpretations of testing for relevant communicable disease agents, the donor-eligibility determination, the name and address of the testing laboratory or laboratories, and the name of the responsible person (defined in § 1271.3(t)) who made the donor-eligibility determination and the date of the determination, must be maintained (§ 1271.55(d)(1)). If any information on the donor is not in English, the original record must be maintained and translated to English and accompanied by a statement of authenticity by the translator (§ 1271.55(d)(2)). HCT/P establishments must retain the records pertaining to a particular HCT/P at least 10 years after the date of its administration, or, if the date of administration is not known, then at least 10 years after the date of the HCT/P's distribution, disposition, or expiration, whichever is latest (§ 1271.55(d)(4)).

When a product is shipped in quarantine, as defined in § 1271.3(q), before completion of screening and testing, the HCT/P must be accompanied by records identifying the donor (*e.g.,* by a distinct identification code affixed to the HCT/P container) stating that the donor-eligibility determination has not been completed and stating that the product must not be implanted, transplanted, infused, or transferred until completion of the donor-eligibility determination, except in cases of urgent medical need, as defined in § 1271.3(u) (§ 1271.60(c)). When an HCT/P is used in cases of documented urgent medical need, the results of any completed donor screening and testing, and a list of any required screening and testing that has not yet been completed also must accompany the HCT/P (§ 1271.60(d)(2)). When a HCT/P is used in cases of urgent medical need or from a donor who has been determined to be ineligible (as permitted under § 1271.65), documentation by the HCT/P establishment is required, showing that the recipient's physician received notification that the testing and screening were not complete (in cases of urgent medical need), and upon the completion of the donor-eligibility determination, of the results of the determination (§§ 1271.60(d)(3) and (4), and 1271.65(b)(3)).

An HCT/P establishment is also required to establish and maintain procedures for all steps that are performed in determining eligibility (§ 1271.47(a) (21 CFR 1271.47(a)), including the use of a product from a donor of viable, leukocyte-rich cells or tissue testing reactive for cytomegalovirus (§ 1271.85(b)(2) (21 CFR 1271.85(b)(2))). The HCT/P establishment must record and justify any departure from a procedure relevant to preventing risks of communicable disease transmission at the time of its occurrence (§ 1271.47(d)).

III. Current Good Tissue Practice

FDA requires HCT/P establishments that manufacture HCT/Ps that are regulated solely under section 361 of the PHS Act to follow CGTP (§ 1271.1(b)). Section 1271.155(a) (21 CFR 1271.155(a)) permits the submission of a request for FDA approval of an exemption from or an alternative to any requirement in subpart C or D of part 1271. Section 1271.290(c) (21 CFR 1271.290(c)) requires establishments to affix a distinct identification code to each HCT/P that they manufacture that relates the HCT/P to the donor and to all records pertaining to the HCT/P. Whenever an establishment distributes an HCT/P to a consignee, § 1271.290(f) requires the establishment to inform the consignee, in writing, of the product tracking requirements and the methods the establishment uses to fulfill these requirements. Non-reproductive HCT/P establishments described in § 1271.10 are required under § 1271.350(a)(1) and (3) (21 CFR 1271.350(a)(1) and (3)) to investigate and report to FDA adverse reactions (defined in § 1271.3(y)) using Form FDA–3500A (§ 1271.350(a)(2)). Form FDA–3500A is approved under OMB control number 0910–0291. Section 1271.370(b) and (c) (21 CFR 1271.370(b) and (c)) requires establishments to include specific information either on the HCT/P label or with the HCT/P.

The standard operating procedures (SOPs) provisions under part 1271 include the following: (1) Section 1271.160(b)(2) (21 CFR 1271.160(b)(2)) (receiving, investigating, evaluating, and documenting information relating to core CGTP requirements, including complaints, and for sharing information with consignees and other establishments); (2) § 1271.180(a) (21 CFR 1271.180(a)) (to meet core CGTP requirements for all steps performed in the manufacture of HCT/Ps); (3) § 1271.190(d)(1) (21 CFR 1271.190(d)(1)) (facility cleaning and sanitization); (4) § 1271.200(b) (21 CFR 1271.200(b)) (cleaning, sanitizing, and maintenance of equipment); (5) § 1271.200(c) (calibration of equipment); (6) § 1271.230(a) and (c) (21 CFR 1271.230(a) and (c)) (validation of a process and review and evaluation of changes to a validated process); (7) § 1271.250(a) (21 CFR 1271.250(a)) (controls for labeling HCT/Ps); (8) § 1271.265(e) (21 CFR 1271.265(e)) (receipt, predistribution shipment, availability for distribution, and packaging and shipping of HCT/Ps); (9) § 1271.265(f) (suitable for return to

inventory); (10) § 1271.270(b) (21 CFR 1271.270(b)) (records management system); (11) § 1271.290(b)(1) (21 CFR 1271.290(b)(1)) (system of HCT/P tracking); and (12) § 1271.320(a) (21 CFR 1271.320(a)) (review, evaluation, and documentation of complaints as defined in § 1271.3(aa)).

Section 1271.155(f) requires an establishment operating under the terms of an exemption or alternative to maintain documentation of FDA's grant of the exemption or approval and the date on which it began operating under the terms of the exemption or alternative. Section 1271.160(b)(3) requires the quality program of an establishment that performs any step in the manufacture of HCT/Ps to document corrective actions relating to core CGTP requirements. Section 1271.160(b)(6) requires documentation of HCT/P deviations. Section 1271.160(d) requires, in brief, documentation of validation of computer software if the establishment relies upon it to comply with core CGTP requirements. Section 1271.190(d)(2) requires documentation of all cleaning and sanitation activities performed to prevent contamination of HCT/Ps. Section 1271.195(d) requires documentation of environmental control and monitoring activities. Section 1271.200(e) requires documentation of all equipment maintenance, cleaning, sanitizing, calibration, and other activities. Section 1271.210(d) (21 CFR 1271.210(d)) requires, in brief, documentation of the receipt, verification, and use of each supply or reagent. Section 1271.230(a) requires documentation of validation activities and results when the results of processing described in 21 CFR 1271.220 cannot be fully verified by subsequent inspection and tests. Section 1271.230(c) requires that when changes to a validated process subject to § 1271.230(a) occur, documentation of the review and evaluation of the process and revalidation, if necessary, must occur. Section 1271.260(d) and (e) (21 CFR 1271.260(d) and (e)) requires documentation of any corrective action taken when proper storage conditions are not met and documentation of the storage temperature for HCT/Ps. Section 1271.265(c)(1) requires documentation that all release criteria have been met before distribution of an HCT/P. Section 1271.265(c)(3) requires documentation of any departure from a procedure relevant to preventing risks of communicable disease transmission at the time of occurrence. Section 1271.265(e) requires documentation of the activities in paragraphs (a) through (d) of that section, which must include identification of the HCT/P and the establishment that supplied the HCT/P, activities performed and the results of each activity, date(s) of activity, quantity of HCT/P subject to the activity, and disposition of the HCT/P. Section 1271.270(a) requires documentation of each step in manufacturing required in part 1271, subparts C and D. Section 1271.270(e) requires documentation of the name and address, and a list of responsibilities of any establishment that performs a manufacturing step for the establishment. Section 1271.290(d) and (e) require documentation of a method for recording the distinct identification code and type of each HCT/P distributed to a consignee to enable tracking from the consignee to the donor and to enable tracking from the donor to the consignee or final disposition. Section 1271.320(b) requires an establishment to maintain a record of each complaint that it receives. The complaint file must contain sufficient information about each complaint for proper review and evaluation of the complaint and for determining whether the complaint is an isolated event or represents a trend.

Section 1271.420(a) (21 CFR 1271.420(a)) requires importers of HCT/Ps to notify the FDA District Director having jurisdiction over the port of entry through which the HCT/Ps are offered for import. The HCT/Ps must be held intact or transported under quarantine until they are inspected and released by FDA.

Respondents to this information collection are establishments that recover, process, store, label, package, or distribute any HCT/P that is regulated solely under section 361 of the PHS Act or perform donor screening or testing. The estimates provided below are based on most recent available information from FDA's database system and trade organizations. The hours per response and hours per record are based on data provided by the Eastern Research Group, or FDA experience with similar recordkeeping or reporting requirements.

There are an estimated 2,736 HCT/P establishments (conventional tissue, eye tissue, peripheral blood stem cell, stem cell products from cord blood, reproductive tissue, and sperm banks), including 1,004 manufacturers of HCT/Ps regulated under the Federal Food, Drug, and Cosmetic Act and section 351 of the PHS Act (42 U.S.C 262), that have registered and listed with FDA. In addition, we estimate that 193 new establishments have registered with FDA (§§ 1271.10(b)(1) and (2) and 1271.25(a) and (b)). There are an estimated 1,062 listing updates (§§ 1271.10(b)(2), 1271.21(c)(ii), and 1271.25(c)) and 358 location/ownership amendments (§ 1271.26).

Under § 1271.23, FDA estimates an average of one waiver request annually.

Under § 1271.55(a), an estimated total of 2,594,415 HCT/Ps (which include conventional tissues, eye tissues, hematopoietic stem cells/progenitor cells, and reproductive cells and tissues), and an estimated total of 2,454,415 non-reproductive cells and tissues (total HCT/Ps minus reproductive cells and tissues) are distributed per year by an estimated 1,632 establishments (2,736 − 1,104 = 1,632).

Under § 1271.60(c) and (d)(2), FDA estimates that 1,611 establishments shipped an estimated 572,000 HCT/P under quarantine, and that an estimated 15 establishments requested 64 exemptions from or alternative to any requirement under part 1271, subpart C or D, specifically under § 1271.155(a).

Under §§ 1271.290(c) and 1271.370(b) and (c), the estimated 2,109 non-reproductive HCT/P establishments label each of their 2,441,644 HCT/Ps with certain information. These establishments are also required to inform their consignees in writing of the requirements for tracking and of their established tracking system under § 1271.290(f).

FDA estimates 13 HCT/P establishments submitted 188 adverse reaction reports with 162 involving a communicable disease (§ 1271.350(a)(1)).

FDA estimates that 193 new establishments will create SOPs, and that 2,736 establishments will review and revise existing SOPs annually.

FDA estimates that 1,368 HCT/P establishments (2,736 × 50 percent = 1,368) and 1,055 non-reproductive HCT/P establishments (2,109 × 50 percent = 1,055) record and justify a departure from the procedures (§§ 1271.47(d) and 1271.265(c)(3)).

Under § 1271.50(a), HCT/P establishments are required to have a documented medical history interview about the donor's medical history and relevant social behavior as part of the donor's relevant medical records for each of the estimated total of 109,019 donors (which include conventional tissue donors, eye tissue donors, peripheral and cord blood stem cell donors, and reproductive cell and tissue donors), and the estimated total of 103,419 non-reproductive cells and tissue donors (total donors minus reproductive cell and tissue donors).

FDA estimates that 821 HCT/P establishments (2,736 × 30 percent =

821) document an urgent medical need of the product to notify the physician using the HCT/P (§§ 1271.60(d)(3) and 1271.65(b)(3)).

FDA also estimates that 2,189 HCT/P establishments (2,736 × 80 percent = 2,189) have to maintain records for an average of 2 contract establishments to perform their manufacturing process (§ 1271.270(e) and 1,687 HCT/P establishments (2,109 × 80 percent = 1,687) maintain an average of 5 complaint records annually (§ 1271.320(b)).

FDA estimates that under § 1271.420(a), 200 establishments will submit 560 reports of HCT/Ps offered for imports.

In the **Federal Register** of December 5, 2019 (84 FR 66673), we published a 60-day notice requesting public comment on the proposed collection of information. No comments were received.

We estimate the burden of the information collection as follows:

TABLE 1—ESTIMATED ANNUAL REPORTING BURDEN [1]

21 CFR part 1271; human cells, tissues, and cellular and tissue-based products	Number of respondents	Number of responses per respondent	Total annual responses	Average burden per response	Total hours [3]
1271.10(b)(1) and 1271.21(b) [2]	2,736	1	2,736	0.5 (30 minutes)	1,368
1271.10(b)(1) and (2), 1271.21(a), and 1271.25(a) and (b) [2].	193	1	193	0.75 (45 minutes)	145
1271.10(b)(2), 1271.21(c)(2)(ii), and 1271.25(c) [2]	1,062	1	1,062	0.5 (30 minutes)	531
1271.23	1	1	1	1	1
1271.26 [2]	358	1	358	0.25 (15 minutes)	90
1271.155(a)	15	4.27	64	3	192
1271.350(a)(1) and (3)	13	14.46	188	1	188
1271.420(a)	200	2.8	560	0.25 (15 minutes)	140
Total					2,655

[1] There are no capital costs or operating and maintenance costs associated with this collection of information.
[2] Using eHCTERS.
[3] Rounded to the nearest whole number.

TABLE 2—ESTIMATED ANNUAL RECORDKEEPING BURDEN [1]

21 CFR part 1271; human cells, tissues, and cellular and tissue-based products	Number of recordkeepers	Number of records per recordkeeper	Total annual records	Average burden per recordkeeping	Total hours [3]
New SOPs [2]	193	1	193	48	9,264
SOP Update [2]	2,736	1	2,736	24	65,664
1271.47(d)	1,368	1	1,368	1	1,368
1271.50(a)	2,736	39.846	109,019	5	545,095
1271.55(d)(1)	2,736	39.846	109,019	1	109,019
1271.55(d)(2)	2,736	1	2,736	1	2,736
1271.55(d)(4)	2,736	1	2,736	120	328,320
1271.60(d)(3) and (4); 1271.65(b)(3)(iii)	821	1	821	2	1,642
1271.155(f)	15	4.27	64	0.25 (15 minutes)	16
1271.160(b)(3) and (6)	2,109	12	25,308	1	25,308
1271.160(d)	2,109	12	25,308	1	25,308
1271.190(d)(2)	2,109	12	25,308	1	25,308
1271.195(d)	2,109	12	25,308	1	25,308
1271.200(e)	2,109	12	25,308	1	25,308
1271.210(d)	2,109	12	25,308	1	25,308
1271.230(a)	2,109	12	25,308	1	25,308
1271.230(c)	2,109	1	2,109	1	2,109
1271.260(d)	2,109	12	25,308	0.25 (15 minutes)	6,327
1271.260(e)	2,109	365	769,785	0.083 (5 minutes)	63,892
1271.265(c)(1)	2,109	1,163.781	2,454,415	0.083 (5 minutes)	203,716
1271.265(c)(3)	1,055	1	1,055	1	1,055
1271.265(e)	2,109	1,163.781	2,454,415	0.083 (5 minutes)	203,716
1271.270(a)	2,109	1,163.781	2,454,415	0.25 (15 minutes)	613,604
1271.270(e)	2,189	2	4,378	0.5 (30 minutes)	2,189
1271.290(d) and (e)	2,109	49.037	103,419	0.25 (15 minutes)	25,855
1271.320(b)	1,687	5	8,435	1	8,435
Total					2,371,178

[1] There are no capital costs or operating and maintenance costs associated with this collection of information.
[2] Sections 1271.47(a), 1271.85(b)(2), 1271.160(b)(2) and (d)(1), 1271.180(a), 1271.190(d)(1), 1271.200(b), 1271.200(c), 1271.230(a), 1271.250(a), and 1271.265(e).
[3] Rounded to the nearest whole number.

TABLE 3—ESTIMATED ANNUAL THIRD-PARTY DISCLOSURE BURDEN [1]

21 CFR part 1271; human cells, tissues, and cellular and tissue-based products	Number of respondents	Number of disclosures per respondent	Total annual disclosures	Average burden per disclosure	Total hours
1271.55(a)	1,632	1,589.715	2,594,415	0.5 (30 minutes)	1,297,208
1271.60(c) and (d)(2)	1,611	355.06	572,000	0.5 (30 minutes)	286,000
1271.290(c)	2,109	1,163.781	2,454,415	0.083 (5 minutes)	203,716
1271.290(f)	2,109	1	2,109	1	2,109
1271.370(b) and (c)	2,109	1,163.781	2,454,415	0.25 (15 minutes)	613,604
Total					2,402,637

[1] There are no capital costs or operating and maintenance costs associated with this collection of information.
[2] Rounded to the nearest whole number.

Our estimated burden for the information collection reflects an overall increase of 628,585 hours (111 reporting burden hours; 305,118 recordkeeping hours; and 323,356 disclosure burden hours) and a corresponding increase of annual responses, annual records, and annual disclosures. We attribute this adjustment to an increase in the number of HCT/P establishments and an increase in the number of HCT/Ps distributed over the past few years.

Dated: March 26, 2020.

Lowell J. Schiller,

Principal Associate Commissioner for Policy.

[FR Doc. 2020–06981 Filed 4–2–20; 8:45 am]

BILLING CODE 4164–01–P

DEPARTMENT OF HEALTH AND HUMAN SERVICES

Food and Drug Administration

[Docket No. FDA–2014–N–0487]

Agency Information Collection Activities; Proposed Collection; Comment Request; Generic Clearance for the Collection of Qualitative Feedback on Agency Service Delivery

AGENCY: Food and Drug Administration, HHS.

ACTION: Notice.

SUMMARY: The Food and Drug Administration (FDA or Agency) is announcing an opportunity for public comment on the proposed collection of certain information by the Agency. Under the Paperwork Reduction Act of 1995 (PRA), Federal Agencies are required to publish notice in the **Federal Register** concerning each proposed collection of information, including each proposed extension of an existing collection of information, and to allow 60 days for public comment in response to the notice. This notice solicits comments on the collection of information for the ''Generic Clearance for the Collection of Qualitative Feedback on Agency Service Delivery.''

DATES: Submit either electronic or written comments on the collection of information by June 2, 2020.

ADDRESSES: You may submit comments as follows. Please note that late, untimely filed comments will not be considered. Electronic comments must be submitted on or before June 2, 2020. The *https://www.regulations.gov* electronic filing system will accept comments until 11:59 p.m. Eastern Time at the end of June 2, 2020. Comments received by mail/hand delivery/courier (for written/paper submissions) will be considered timely if they are postmarked or the delivery service acceptance receipt is on or before that date.

Electronic Submissions

Submit electronic comments in the following way:

- *Federal eRulemaking Portal: https://www.regulations.gov.* Follow the instructions for submitting comments. Comments submitted electronically, including attachments, to *https://www.regulations.gov* will be posted to the docket unchanged. Because your comment will be made public, you are solely responsible for ensuring that your comment does not include any confidential information that you or a third party may not wish to be posted, such as medical information, your or anyone else's Social Security number, or confidential business information, such as a manufacturing process. Please note that if you include your name, contact information, or other information that identifies you in the body of your comments, that information will be posted on *https://www.regulations.gov.*
- If you want to submit a comment with confidential information that you do not wish to be made available to the public, submit the comment as a written/paper submission and in the manner detailed (see ''Written/Paper Submissions'' and ''Instructions'').

Written/Paper Submissions

Submit written/paper submissions as follows:

- *Mail/Hand Delivery/Courier (for written/paper submissions):* Dockets Management Staff (HFA–305), Food and Drug Administration, 5630 Fishers Lane, Rm. 1061, Rockville, MD 20852.
- For written/paper comments submitted to the Dockets Management Staff, FDA will post your comment, as well as any attachments, except for information submitted, marked and identified, as confidential, if submitted as detailed in ''Instructions.''

Instructions: All submissions received must include the Docket No. FDA–2014–N–0487 for ''Agency Information Collection Actitivites; Proposed Collection; Comment Request; Generic Clearance for the Collection of Qualitative Feedback on Agency Service Delivery.'' Received comments, those filed in a timely manner (see **ADDRESSES**), will be placed in the docket and, except for those submitted as ''Confidential Submissions,'' publicly viewable at *https://www.regulations.gov* or at the Dockets Management Staff between 9 a.m. and 4 p.m., Monday through Friday.

- Confidential Submissions—To submit a comment with confidential information that you do not wish to be made publicly available, submit your comments only as a written/paper submission. You should submit two copies total. One copy will include the information you claim to be confidential with a heading or cover note that states ''THIS DOCUMENT CONTAINS CONFIDENTIAL INFORMATION.'' The Agency will review this copy, including the claimed confidential information, in its consideration of comments. The second copy, which will have the claimed confidential information redacted/blacked out, will be available for public viewing and posted on *https://www.regulations.gov.* Submit both copies to the Dockets Management Staff. If you do not wish your name and

contact information to be made publicly available, you can provide this information on the cover sheet and not in the body of your comments and you must identify this information as ''confidential.'' Any information marked as ''confidential'' will not be disclosed except in accordance with 21 CFR 10.20 and other applicable disclosure law. For more information about FDA's posting of comments to public dockets, see 80 FR 56469, September 18, 2015, or access the information at: *https://www.govinfo.gov/content/pkg/FR-2015-09-18/pdf/2015-23389.pdf.*

Docket: For access to the docket to read background documents or the electronic and written/paper comments received, go to *https://www.regulations.gov* and insert the docket number, found in brackets in the heading of this document, into the ''Search'' box and follow the prompts and/or go to the Dockets Management Staff, 5630 Fishers Lane, Rm. 1061, Rockville, MD 20852.

FOR FURTHER INFORMATION CONTACT: Ila S. Mizrachi, Office of Operations, Food and Drug Administration, Three White Flint North, 10A–12M, 11601 Landsdown St., North Bethesda, MD 20852, 301–796–7726, *PRAStaff@fda.hhs.gov.*

SUPPLEMENTARY INFORMATION: Under the PRA (44 U.S.C. 3501–3521), Federal Agencies must obtain approval from the Office of Management and Budget (OMB) for each collection of information they conduct or sponsor. ''Collection of information'' is defined in 44 U.S.C. 3502(3) and 5 CFR 1320.3(c) and includes Agency requests or requirements that members of the public submit reports, keep records, or provide information to a third party. Section 3506(c)(2)(A) of the PRA (44 U.S.C. 3506(c)(2)(A)) requires Federal Agencies to provide a 60-day notice in the **Federal Register** concerning each proposed collection of information, including each proposed extension of an existing collection of information, before submitting the collection to OMB for approval. To comply with this requirement, FDA is publishing notice of the proposed collection of information set forth in this document.

With respect to the following collection of information, FDA invites comments on these topics: (1) Whether the proposed collection of information is necessary for the proper performance of FDA's functions, including whether the information will have practical utility; (2) the accuracy of FDA's estimate of the burden of the proposed collection of information, including the validity of the methodology and assumptions used; (3) ways to enhance the quality, utility, and clarity of the information to be collected; and (4) ways to minimize the burden of the collection of information on respondents, including through the use of automated collection techniques, when appropriate, and other forms of information technology.

Generic Clearance for the Collection of Qualitative Feedback on Agency Service Delivery

OMB Control Number 0910–0697—Extension

The information collection activity will garner qualitative customer and stakeholder feedback in an efficient, timely manner, in accordance with the Administration's commitment to improving service delivery. By qualitative feedback we mean information that provides useful insights on perceptions and opinions but are not statistical surveys that yield quantitative results that can be generalized to the population of study. This feedback will provide insights into customer or stakeholder perceptions, experiences and expectations, provide an early warning of issues with service, or focus attention on areas where communication, training or changes in operations might improve delivery of products or services. These collections will allow for ongoing, collaborative, and actionable communications between the Agency and its customers and stakeholders. It will also allow feedback to contribute directly to the improvement of program management.

Feedback collected under this generic clearance will provide useful information, but it will not yield data that can be generalized to the overall population. This type of generic clearance for qualitative information will not be used for quantitative information collections that are designed to yield reliably actionable results, such as monitoring trends over time or documenting program performance. Such data uses require more rigorous designs that address the following: The target population to which generalizations will be made, the sampling frame, the sample design (including stratification and clustering), the precision requirements or power calculations that justify the proposed sample size, the expected response rate, methods for assessing potential non-response bias, the protocols for data collection, and any testing procedures that were or will be undertaken prior fielding the study. Depending on the degree of influence the results are likely to have, such collections may still be eligible for submission for other generic mechanisms that are designed to yield quantitative results.

Respondents to this collection of information cover a broad range of stakeholders who have specific characteristics related to certain products or services regulated by FDA. These stakeholders include members of the general public, healthcare professionals, the industry, and other stakeholders who are related to a product under FDA's jurisdiction.

FDA estimates the burden of this collection of information as follows:

TABLE 1—ESTIMATED ANNUAL REPORTING BURDEN [1]

Activity	Number of respondents	Number of responses per respondent	Total annual responses	Average burden per response	Total hours
Focus groups	800	1	800	1.75	1,400
Customer comment cards/forms	1,325	1	1,325	0.25 (15 minutes)	331.25
Small discussion groups	800	1	800	1.75	1,400
Customer satisfaction surveys	12,000	1	12,000	0.33 (20 minutes)	3,960
Total					7,091.25

[1] There are no capital costs or operating and maintenance costs associated with this collection of information.

Based on a review of the information collection since our last request for OMB approval, we have made no adjustments to our burden estimate.

Dated: March 24, 2020.

Lowell J. Schiller,

Principal Associate Commissioner for Policy.

[FR Doc. 2020–06992 Filed 4–2–20; 8:45 am]

BILLING CODE 4164–01–P

DEPARTMENT OF HEALTH AND HUMAN SERVICES

Food and Drug Administration

[Docket No. FDA–2016–N–3535]

Agency Information Collection Activities; Submission for Office of Management and Budget Review; Comment Request; Special Protocol Assessment; Guidance for Industry

AGENCY: Food and Drug Administration, HHS.

ACTION: Notice.

SUMMARY: The Food and Drug Administration (FDA) is announcing that a proposed collection of information has been submitted to the Office of Management and Budget (OMB) for review and clearance under the Paperwork Reduction Act of 1995.

DATES: Submit written comments (including recommendations) on the collection of information May 4, 2020.

ADDRESSES: To ensure that comments on the information collection are received, OMB recommends that written comments be submitted to *https://www.reginfo.gov/public/do/PRAMain.* Find this particular information collection by selecting ''Currently under Review—Open for Public Comments'' or by using the search function. The OMB control number for this information collection is 0910–0470. Also include the FDA docket number found in brackets in the heading of this document.

FOR FURTHER INFORMATION CONTACT: Domini Bean, Office of Operations, Food and Drug Administration, Three White Flint North, 10A–12M, 11601 Landsdown St., North Bethesda, MD 20852, 301–796–5733, *PRAStaff@fda.hhs.gov.*

SUPPLEMENTARY INFORMATION: In compliance with 44 U.S.C. 3507, FDA has submitted the following proposed collection of information to OMB for review and clearance.

Special Protocol Assessment

OMB Control Number 0910–0470—Revision

This information collection request supports Agency guidance entitled ''Special Protocol Assessment'' (Revision 1) (83 FR 16367, April 16, 2018), which describes procedures FDA uses to evaluate issues related to the adequacy (*e.g.,* design, conduct, analysis) of certain proposed studies. A copy of the guidance is available from our website at *https://www.fda.gov/RegulatoryInformation/Guidances/default.htm.* The guidance describes procedures for sponsors to request special protocol assessment and for FDA to act on such requests. The guidance provides information on how FDA interprets and applies provisions of the Food and Drug Administration Modernization Act of 1997 and the specific Prescription Drug User Fee Act of 1992 (PDUFA) goals for special protocol assessment associated with the development and review of PDUFA products. The guidance describes the following two collections of information: (1) The submission of a notice of intent to request special protocol assessment of a carcinogenicity protocol; and (2) the submission of a request for special protocol assessment.

I. Notification for a Carcinogenicity Protocol

As described in the guidance, a sponsor interested in an FDA assessment of a carcinogenicity protocol should notify the appropriate division in FDA's Center for Drug Evaluation and Research (CDER) or the Center for Biologics Evaluation and Research (CBER) of an intent to request special protocol assessment at least 30 days prior to submitting the request. With such notification, the sponsor should submit relevant background information so that FDA may review reference material related to carcinogenicity protocol design before receiving the carcinogenicity protocol.

II. Request for Special Protocol Assessment

The guidance asks that a request for special protocol assessment be submitted as an amendment to the investigational new drug application (IND) for the underlying product and that it be submitted to FDA in triplicate with Form FDA 1571 (*https://www.fda.gov/downloads/AboutFDA/ReportsManualsForms/Forms/UCM083533.pdf*) attached. The guidance also suggests that the sponsor submit the cover letter to a request for special protocol assessment via Fax to the appropriate division in CDER or CBER. FDA regulations (21 CFR 312.23(d)) state that information provided to us as part of an IND is to be submitted in triplicate and with the appropriate cover form, Form FDA 1571. An IND is submitted to FDA under existing regulations in part 312 (21 CFR part 312), which specifies the information that manufacturers must submit so that FDA may properly evaluate the safety and effectiveness of investigational drugs and biological products. The information collection requirements resulting from the preparation and submission of an IND under part 312 have been estimated by FDA, and the reporting and recordkeeping burden has been approved by OMB under OMB control number 0910–0014.

FDA suggests that the cover letter to the request for special protocol assessment be submitted via Fax to the appropriate division in CDER or CBER to enable FDA staff to prepare for the arrival of the protocol for assessment. FDA recommends that a request for special protocol assessment be submitted as an amendment to an IND for two reasons: (1) To ensure that each request is kept in the administrative file with the entire IND and (2) to ensure that pertinent information about the request is entered into the appropriate tracking databases. Use of the information in FDA's tracking databases enables the appropriate Agency official to monitor progress on the evaluation of the protocol and to ensure that appropriate steps will be taken in a timely manner.

The guidance recommends that the following information should be submitted to the appropriate Center with each request for special protocol assessment so that the Center may quickly and efficiently respond to the request:

- Questions to FDA concerning specific issues regarding the protocol.
- All data, assumptions, and information needed to permit an adequate evaluation of the protocol, including: (1) The role of the study in the overall development of the drug; (2) information supporting the proposed trial, including power calculations, the choice of study endpoints, and other critical design features; (3) regulatory outcomes that could be supported by the results of the study; (4) final labeling that could be supported by the results of the study; and (5) for a stability protocol, product characterization and relevant manufacturing data.

Description of Respondents: A sponsor, applicant, or manufacturer of a drug or biologic product that FDA

regulates under the Federal Food, Drug, and Cosmetic Act or section 351 of the Public Health Service Act (42 U.S.C. 262) requesting special protocol assessment.

In the **Federal Register** of January 3, 2020 (85 FR 320) we published a 60-day notice requesting public comment on the proposed collection of information. Although one comment was received, it was not responsive to the information collection topics solicited in the notice.

We estimate the burden of this collection of information as follows:

TABLE 1—ESTIMATED ANNUAL REPORTING BURDEN [1]

Information collection activity	Number of respondents	Number of responses per respondent	Total annual responses	Average burden per response	Total hours
Notification for Carcinogenicity Protocols	106	1.78	189	8	1,510
Requests for Special Protocol Assessment Reports	113	1.03	116	15	1,740
Total			305		3,250

[1] There are no capital costs or operating and maintenance costs associated with this collection of information.

Burden Estimate: Table 1 provides an estimate of the annual reporting burden for notifications for a carcinogenicity protocol and requests for a special protocol assessment.

Notification for a Carcinogenicity Protocol: Based on the number of notifications for carcinogenicity protocols and the number of carcinogenicity protocols currently submitted to CDER and CBER, CDER estimates that it will receive approximately 188 notifications of an intent to request special protocol assessment of a carcinogenicity protocol per year from approximately 105 sponsors. CBER estimates that it will receive approximately one notification of an intent to request special protocol assessment of a carcinogenicity protocol per year from approximately one sponsor. The hours per response, which is the estimated number of hours that a sponsor would spend preparing the notification and background information to be submitted in accordance with the guidance, is estimated to be approximately 8 hours.

Requests for Special Protocol Assessment: Based on the number of requests for special protocol assessment currently submitted to CDER and CBER, CDER estimates that it will receive approximately 108 requests for special protocol assessment per year from approximately 105 sponsors. CBER estimates that it will receive approximately eight requests from approximately eight sponsors. The hours per response is the estimated number of hours that a respondent would spend preparing the information to be submitted with a request for special protocol assessment, including the time it takes to gather and copy questions to be posed to the Agency regarding the protocol and data, assumptions, and information needed to permit an adequate evaluation of the protocol.

Based on our experience with these submissions, we estimate approximately 15 hours on average would be needed per response. The information collection reflects an adjustment in burden by 608 hours. We attribute this adjustment to an increase in the number of submissions we received over the last few years.

Dated: March 24, 2020.

Lowell J. Schiller,

Principal Associate Commissioner for Policy.

[FR Doc. 2020–06983 Filed 4–2–20; 8:45 am]

BILLING CODE 4164–01–P

DEPARTMENT OF HEALTH AND HUMAN SERVICES

Food and Drug Administration

[Docket No. FDA–2020–N–0907]

Medical Device User Fee Amendments for Fiscal Years 2023 Through 2027; Public Meeting; Request for Comments

AGENCY: Food and Drug Administration, HHS.

ACTION: Notice of public meeting; request for comments; postponement.

SUMMARY: The Food and Drug Administration (FDA) is announcing that the public meeting entitled ''Medical Device User Fee Amendments for Fiscal Years 2023 Through 2027; Public Meeting; Request for Comments'' that appeared in the **Federal Register** on March 6, 2020, and was scheduled for April 7, 2020, is postponed to May 5, 2020, and will take place by webcast only.

DATES: The public meeting will take place remotely on May 5, 2020, beginning at 9 a.m. EST. Submit either electronic or written comments on the medical device user fee program and suggestions regarding the commitments FDA should propose for the next reauthorized program by June 5, 2020.

FOR FURTHER INFORMATION CONTACT: Ellen Olson, Center for Devices and Radiological Health, Food and Drug Administration, Bldg. 66, Rm. 1664, 10903 New Hampshire Ave., Silver Spring, MD 20993, 301–796–4322, *ellen.olson@fda.hhs.gov* or *CDRH-OPEQ-StrategicInitiatives@fda.hhs.gov.*

SUPPLEMENTARY INFORMATION: The public meeting entitled ''Medical Device User Fee Amendments for Fiscal Years 2023 Through 2027; Public Meeting; Request for Comments'' announced in the **Federal Register** of March 6, 2020 (85 FR 13165), and scheduled for April 7, 2020, is postponed to May 5, 2020, and will take place virtually due to extenuating circumstances. There will no longer be an in-person meeting and instead the meeting will be held by webcast only. The webcast link and connection instructions will be available on the registration web page (*https://www.fda.gov/medical-devices/workshops-conferences-medical-devices/2020-medical-device-meetings-and-workshops*) after April 23, 2020. Interested participants may continue to register and, if applicable, to specify whether they would like to present during a particular session or the public comment session.

Dated: March 31, 2020.

Lowell J. Schiller,

Principal Associate Commissioner for Policy.

[FR Doc. 2020–07016 Filed 4–2–20; 8:45 am]

BILLING CODE 4164–01–P

DEPARTMENT OF HEALTH AND HUMAN SERVICES

Food and Drug Administration

[Docket No. FDA–2008–N–0490]

Agency Information Collection Activities; Proposed Collection; Comment Request; Cosmetic Labeling Regulations and Voluntary Cosmetic Registration Program

AGENCY: Food and Drug Administration, HHS.

ACTION: Notice.

SUMMARY: The Food and Drug Administration (FDA or Agency) is announcing an opportunity for public comment on the proposed collection of certain information by the Agency. Under the Paperwork Reduction Act of 1995 (PRA), Federal Agencies are required to publish notice in the **Federal Register** concerning each proposed collection of information, including each proposed extension of an existing collection of information, and to allow 60 days for public comment in response to the notice. This notice solicits comments on information collection provisions in FDA's cosmetic labeling regulations and its Voluntary Cosmetic Registration Program (VCRP).

DATES: Submit either electronic or written comments on the collection of information by June 2, 2020.

ADDRESSES: You may submit comments as follows. Please note that late, untimely filed comments will not be considered. Electronic comments must be submitted on or before June 2, 2020. The *https://www.regulations.gov* electronic filing system will accept comments until 11:59 p.m. Eastern Time at the end of June 2, 2020. Comments received by mail/hand delivery/courier (for written/paper submissions) will be considered timely if they are postmarked or the delivery service acceptance receipt is on or before that date.

Electronic Submissions

Submit electronic comments in the following way:

• *Federal eRulemaking Portal: https://www.regulations.gov.* Follow the instructions for submitting comments. Comments submitted electronically, including attachments, to *https://www.regulations.gov* will be posted to the docket unchanged. Because your comment will be made public, you are solely responsible for ensuring that your comment does not include any confidential information that you or a third party may not wish to be posted, such as medical information, your or anyone else's Social Security number, or confidential business information, such as a manufacturing process. Please note that if you include your name, contact information, or other information that identifies you in the body of your comments, that information will be posted on *https://www.regulations.gov.*

• If you want to submit a comment with confidential information that you do not wish to be made available to the public, submit the comment as a written/paper submission and in the manner detailed (see ''Written/Paper Submissions'' and ''Instructions'').

Written/Paper Submissions

Submit written/paper submissions as follows:

• *Mail/Hand delivery/Courier (for written/paper submissions):* Dockets Management Staff (HFA–305), Food and Drug Administration, 5630 Fishers Lane, Rm. 1061, Rockville, MD 20852.

• For written/paper comments submitted to the Dockets Management Staff, FDA will post your comment, as well as any attachments, except for information submitted, marked and identified, as confidential, if submitted as detailed in ''Instructions.''

Instructions: All submissions received must include the Docket No. FDA–2008–N–0490 for ''Agency Information Collection Activities; Proposed Collection; Comment Request; Cosmetic Labeling Regulations and Voluntary Cosmetic Registration Program.'' Received comments, those filed in a timely manner (see **ADDRESSES**), will be placed in the docket and, except for those submitted as ''Confidential Submissions,'' publicly viewable at *https://www.regulations.gov* or at the Dockets Management Staff between 9 a.m. and 4 p.m., Monday through Friday.

• Confidential Submissions—To submit a comment with confidential information that you do not wish to be made publicly available, submit your comments only as a written/paper submission. You should submit two copies total. One copy will include the information you claim to be confidential with a heading or cover note that states ''THIS DOCUMENT CONTAINS CONFIDENTIAL INFORMATION.'' The Agency will review this copy, including the claimed confidential information, in its consideration of comments. The second copy, which will have the claimed confidential information redacted/blacked out, will be available for public viewing and posted on *https://www.regulations.gov.* Submit both copies to the Dockets Management Staff. If you do not wish your name and contact information to be made publicly available, you can provide this information on the cover sheet and not in the body of your comments and you must identify this information as ''confidential.'' Any information marked as ''confidential'' will not be disclosed except in accordance with 21 CFR 10.20 and other applicable disclosure law. For more information about FDA's posting of comments to public dockets, see 80 FR 56469, September 18, 2015, or access the information at: *https://www.govinfo.gov/content/pkg/FR-2015-09-18/pdf/2015-23389.pdf.*

Docket: For access to the docket to read background documents or the electronic and written/paper comments received, go to *https://www.regulations.gov* and insert the docket number, found in brackets in the heading of this document, into the ''Search'' box and follow the prompts and/or go to the Dockets Management Staff, 5630 Fishers Lane, Rm. 1061, Rockville, MD 20852.

FOR FURTHER INFORMATION CONTACT: Domini Bean, Office of Operations, Food and Drug Administration, Three White Flint North, 10A–12M, 11601 Landsdown St., North Bethesda, MD 20852, 301–796–5733, *PRAStaff@fda.hhs.gov.*

SUPPLEMENTARY INFORMATION: Under the PRA (44 U.S.C. 3501–3521), Federal Agencies must obtain approval from the Office of Management and Budget (OMB) for each collection of information they conduct or sponsor. ''Collection of information'' is defined in 44 U.S.C. 3502(3) and 5 CFR 1320.3(c) and includes Agency requests or requirements that members of the public submit reports, keep records, or provide information to a third party. Section 3506(c)(2)(A) of the PRA (44 U.S.C. 3506(c)(2)(A)) requires Federal Agencies to provide a 60-day notice in the **Federal Register** concerning each proposed collection of information, including each proposed extension of an existing collection of information, before submitting the collection to OMB for approval. To comply with this requirement, FDA is publishing notice of the proposed collection of information set forth in this document.

With respect to the following collection of information, FDA invites comments on these topics: (1) Whether the proposed collection of information is necessary for the proper performance of FDA's functions, including whether the information will have practical utility; (2) the accuracy of FDA's estimate of the burden of the proposed collection of information, including the validity of the methodology and assumptions used; (3) ways to enhance

the quality, utility, and clarity of the information to be collected; and (4) ways to minimize the burden of the collection of information on respondents, including through the use of automated collection techniques, when appropriate, and other forms of information technology.

Cosmetic Labeling Regulations—21 CFR Part 701 and Voluntary Cosmetic Registration Program—21 CFR Parts 710 and 720

OMB Control Number 0910–0599—Revision

The Federal Food, Drug, and Cosmetic Act (FD&C Act) and the Fair Packaging and Labeling Act (the FPLA) require that cosmetic manufacturers, packers, and distributors disclose information about themselves or their products on the labels or labeling of their products. Sections 201, 301, 502, 601, 602, 603, 701, and 704 of the FD&C Act (21 U.S.C. 321, 352, 361, 362, 363, 371, and 374) and sections 4 and 5 of the FPLA (15 U.S.C. 1453 and 1454) provide authority to FDA to regulate the labeling of cosmetic products. Failure to comply with the requirements for cosmetic labeling may render a cosmetic adulterated under section 601 of the FD&C Act or misbranded under section 602 of the FD&C Act.

Cosmetic Labeling Regulations

FDA's cosmetic labeling regulations are codified in part 701 (21 CFR part 701). Section 701.3 requires the label of a cosmetic product to bear a declaration of the ingredients in descending order of predominance. Section 701.11 requires the principal display panel of a cosmetic product to bear a statement of the identity of the product. Section 701.12 requires the label of a cosmetic product to specify the name and place of business of the manufacturer, packer, or distributor. Section 701.13 requires the label of a cosmetic product to declare the net quantity of contents of the product. The information collection provisions found in part 701 are currently approved under OMB control number 0910–0027. To improve the efficiency of Agency operations, we are consolidating these information collection elements into OMB control number 0910–0599.

Voluntary Cosmetic Registration Program

Information collection associated with our VCRP are found in parts 710 and 720 (21 CFR parts 710 and 720). Participants have the option of submitting information via paper forms or via an online interface. The use of the term ''form'' refers to both the paper form and the online system.

Pursuant to part 710, we request that establishments that manufacture or package cosmetic products voluntarily register with us using Form FDA 2511 entitled ''Registration of Cosmetic Product Establishment.'' The online version of Form FDA 2511 is available on our VCRP website at *https://www.fda.gov/cosmetics/voluntary-cosmetic-registration-program/online-registration-voluntary-cosmetic-registration-program-vcrp.* We encourage online registration of Form FDA 2511 because it is faster and more efficient for the filer and the Agency. A registering facility will receive confirmation of online registration, including a registration number by email. The online system also allows for amendments to past submissions.

Because registration of cosmetic product establishments is not mandatory, voluntary registration provides FDA with the best information available about the locations, business trade names, and types of activity (manufacturing or packaging) of cosmetic product establishments. We store the registration information in a computer database and use the information to generate mailing lists for distributing regulatory information and for inviting firms to participate in workshops on topics in which they may be interested. Registration is permanent, although we request that respondents submit an amended Form FDA 2511 if any of the originally submitted information changes.

Pursuant to part 720, we request firms that manufacture, pack, or distribute cosmetics to file with the Agency an ingredient statement for each of their products. Filing of cosmetic product ingredient statements is also voluntary. Ingredient statements for new submissions are reported on Form FDA 2512, ''Cosmetic Product Ingredient Statement,'' and on Form FDA 2512a, a continuation form. Amendments to product formulations also are reported on Forms FDA 2512 and FDA 2512a. When a firm discontinues the commercial distribution of a cosmetic, we request that the firm notify FDA that they have discontinued a cosmetic product formulation by submitting an amended Form FDA 2512. If any of the information submitted on these forms is confidential, the firm may submit a request for confidentiality of a cosmetic ingredient.

FDA's use of an electronic submission system has been designed to make it easier for participants to provide information to FDA about their products. The online version of Forms FDA 2512 and FDA 2512a are available on our VCRP website at *https://www.fda.gov/cosmetics/voluntary-cosmetic-registration-program/online-registration-voluntary-cosmetic-registration-program-vcrp.*

Description of Respondents: Respondents to this collection of information include cosmetic manufacturers, packers, and distributors. Respondents are from the private sector (for-profit businesses).

We estimate the burden of this collection of information as follows:

TABLE 1—ESTIMATED ANNUAL THIRD-PARTY DISCLOSURE BURDEN [1]

21 CFR section; activity	Number of respondents	Number of disclosures per respondent	Total annual disclosures	Average burden per disclosure	Total hours
701.3; ingredients in order of predominance	1,518	21	31,878	1	31,878
701.11; statement of identity	1,518	24	36,432	1	36,432
701.12; name and place of business	1,518	24	36,432	1	36,432
701.13; net quantity of contents	1,518	24	36,432	1	36,432
Total					141,174

[1] There are no capital costs or operating and maintenance costs associated with this collection of information.

The estimated annual third-party disclosure burden is based on data available to the Agency, our knowledge of and experience with cosmetics, and communications with industry. The hour burden is the additional or incremental time that establishments need to design and print labeling that includes the following required

elements: A declaration of ingredients in decreasing order of predominance, a statement of the identity of the product, a specification of the name and place of business of the establishment, and a declaration of the net quantity of contents. These requirements increase the time establishments needed to design labels because they increase the number of label elements that establishments must consider when designing labels. These requirements do not generate any recurring burden per label because establishments must already print and affix labels to cosmetic products as part of normal business practices. We estimate that the total third-party disclosure burden is 141,174 hours.

TABLE 2—ESTIMATED ANNUAL REPORTING BURDEN [1]

21 CFR section or part	Form FDA No.	Number of respondents	Number of responses per respondent	Total annual responses	Average burden per response	Total hours
Part 710 (registrations)	[2] 2511	1,702	1	1,702	0.20 (12 minutes)	340
720.1 through 720.4 (new submissions).	[3] 2512	6,843	1	6,843	0.33 (20 minutes)	2,258
720.6 (amendments)	2512	2,477	1	2,477	0.17 (10 minutes)	421
720.6 (notices of discontinuance)	2512	232	1	232	0.10 (6 minutes)	23
720.8 (requests for confidentiality)		1	1	1	2	2
Total						3,044

[1] There are no capital costs or operating and maintenance costs associated with this collection of information.

[2] The term "Form FDA 2511" refers to both the paper Form FDA 2511 and online Form FDA 2511 in the online system known as the VCRP, which is available at *https://www.fda.gov/cosmetics/voluntary-cosmetic-registration-program/online-registration-voluntary-cosmetic-registration-program-vcrp.*

[3] The term "Form FDA 2512" refers to the paper Forms FDA 2512 and 2512a and online Form FDA 2512 in the online system known as the VCRP, which is available at *https://www.fda.gov/cosmetics/voluntary-cosmetic-registration-program/online-registration-voluntary-cosmetic-registration-program-vcrp.*

We base our estimate on information from cosmetic industry personnel and FDA experience entering data submitted on paper Forms FDA 2511, 2512, and 2512a into the online system. We estimate that, annually, 1,702 establishments that manufacture or package cosmetic products will each submit 1 registration on Form FDA 2511, for a total of 1,702 annual responses. Each submission is estimated to take about 0.20 hour per response for a total of 340.4 hours, rounded to 340. We estimate that, annually, firms that manufacture, pack, or distribute cosmetics will file 6,843 ingredient statements for new submissions on Forms FDA 2512 and FDA 2512a. Each submission is estimated to take about 0.33 hour per response for a total of 2,258.19 hours, rounded to 2,258. We estimate that, annually, firms that manufacture, pack, or distribute cosmetics will file 2,477, amendments to product formulations on Forms FDA 2512 and FDA 2512a. Each submission is estimated to take about 0.17 hour per response for a total of 421.09 hours, rounded to 421. We estimate that, annually, firms that manufacture, pack, or distribute cosmetics will file 232 notices of discontinuance on Form FDA 2512. Each submission is estimated to take about 0.10 hour per response for a total of 23.2 hours, rounded to 23. We estimate that, annually, one firm will file one request for confidentiality. Each such request is estimated to take 2 hours to prepare for a total of 2 hours. Thus, the estimated total reporting burden is 3,044 hours.

Our estimated burden for the information collection reflects an overall increase of 3,044 hours and a corresponding increase of 11,255 responses. We attribute this adjustment to an increase in the number of hours and responses due to the consolidation of OMB control numbers 0910–0027 and 0910–0599. Total burden for the combined collection of information is therefore, 144,218 hours (141,174 hours from OMB control number 0910–0599 and 3,044 hours from OMB control number 0910–0027).

Dated: March 30, 2020.

Lowell J. Schiller,

Principal Associate Commissioner for Policy.

[FR Doc. 2020–06982 Filed 4–2–20; 8:45 am]

BILLING CODE 4164–01–P

DEPARTMENT OF HEALTH AND HUMAN SERVICES

Food and Drug Administration

[Docket No. FDA–2013–N–1119]

Agency Information Collection Activities; Proposed Collection; Comment Request; Food Canning Establishment Registration, Process Filing, and Recordkeeping for Acidified Foods and Thermally Processed Low-Acid Foods in Hermetically Sealed Containers

AGENCY: Food and Drug Administration, HHS.

ACTION: Notice.

SUMMARY: The Food and Drug Administration (FDA or Agency) is announcing an opportunity for public comment on the proposed collection of certain information by the Agency. Under the Paperwork Reduction Act of 1995 (PRA), Federal Agencies are required to publish notice in the **Federal Register** concerning each proposed collection of information, including each proposed extension of an existing collection of information, and to allow 60 days for public comment in response to the notice. This notice solicits comments on the information collection provisions of reporting and recordkeeping requirements for firms that process acidified foods and thermally processed low-acid foods in hermetically sealed containers.

DATES: Submit either electronic or written comments on the collection of information by June 2, 2020.

ADDRESSES: You may submit comments as follows. Please note that late, untimely filed comments will not be considered. Electronic comments must be submitted on or before June 2, 2020. The *https://www.regulations.gov* electronic filing system will accept comments until 11:59 p.m. Eastern Time at the end of June 2, 2020. Comments received by mail/hand delivery/courier (for written/paper submissions) will be considered timely if they are postmarked or the delivery service acceptance receipt is on or before that date.

Electronic Submissions

Submit electronic comments in the following way:

• *Federal eRulemaking Portal: https://www.regulations.gov.* Follow the instructions for submitting comments. Comments submitted electronically, including attachments, to *https://www.regulations.gov* will be posted to the docket unchanged. Because your comment will be made public, you are solely responsible for ensuring that your comment does not include any confidential information that you or a third party may not wish to be posted, such as medical information, your or anyone else's Social Security number, or confidential business information, such as a manufacturing process. Please note that if you include your name, contact information, or other information that identifies you in the body of your comments, that information will be posted on *https://www.regulations.gov.*

• If you want to submit a comment with confidential information that you do not wish to be made available to the public, submit the comment as a written/paper submission and in the manner detailed (see ''Written/Paper Submissions'' and ''Instructions'').

Written/Paper Submissions

Submit written/paper submissions as follows:

• *Mail/Hand delivery/Courier (for written/paper submissions):* Dockets Management Staff (HFA–305), Food and Drug Administration, 5630 Fishers Lane, Rm. 1061, Rockville, MD 20852.

• For written/paper comments submitted to the Dockets Management Staff, FDA will post your comment, as well as any attachments, except for information submitted, marked and identified, as confidential, if submitted as detailed in ''Instructions.''

Instructions: All submissions received must include the Docket No. FDA–2013–N–1119 for ''Agency Information Collection Activities; Proposed Collection; Comment Request; Food Canning Establishment Registration, Process Filing, and Recordkeeping for Acidified Foods and Thermally Processed Low-Acid Foods in Hermetically Sealed Containers.'' Received comments, those filed in a timely manner (see **ADDRESSES**), will be placed in the docket and, except for those submitted as ''Confidential Submissions,'' publicly viewable at *https://www.regulations.gov* or at the Dockets Management Staff between 9 a.m. and 4 p.m., Monday through Friday.

• Confidential Submissions—To submit a comment with confidential information that you do not wish to be made publicly available, submit your comments only as a written/paper submission. You should submit two copies total. One copy will include the information you claim to be confidential with a heading or cover note that states ''THIS DOCUMENT CONTAINS CONFIDENTIAL INFORMATION.'' The Agency will review this copy, including the claimed confidential information, in its consideration of comments. The second copy, which will have the claimed confidential information redacted/blacked out, will be available for public viewing and posted on *https://www.regulations.gov.* Submit both copies to the Dockets Management Staff. If you do not wish your name and contact information to be made publicly available, you can provide this information on the cover sheet and not in the body of your comments and you must identify this information as ''confidential.'' Any information marked as ''confidential'' will not be disclosed except in accordance with 21 CFR 10.20 and other applicable disclosure law. For more information about FDA's posting of comments to public dockets, see 80 FR 56469, September 18, 2015, or access the information at: *https://www.govinfo.gov/content/pkg/FR-2015-09-18/pdf/2015-23389.pdf.*

Docket: For access to the docket to read background documents or the electronic and written/paper comments received, go to *https://www.regulations.gov* and insert the docket number, found in brackets in the heading of this document, into the ''Search'' box and follow the prompts and/or go to the Dockets Management Staff, 5630 Fishers Lane, Rm. 1061, Rockville, MD 20852.

FOR FURTHER INFORMATION CONTACT: Domini Bean, Office of Operations, Food and Drug Administration, Three White Flint North, 10A–12M, 11601 Landsdown St., North Bethesda, MD 20852, 301–796–5733, *PRAStaff@fda.hhs.gov.*

SUPPLEMENTARY INFORMATION: Under the PRA (44 U.S.C. 3501–3521), Federal Agencies must obtain approval from the Office of Management and Budget (OMB) for each collection of information they conduct or sponsor. ''Collection of information'' is defined in 44 U.S.C. 3502(3) and 5 CFR 1320.3(c) and includes Agency requests or requirements that members of the public submit reports, keep records, or provide information to a third party. Section 3506(c)(2)(A) of the PRA (44 U.S.C. 3506(c)(2)(A)) requires Federal Agencies to provide a 60-day notice in the **Federal Register** concerning each proposed collection of information, including each proposed extension of an existing collection of information, before submitting the collection to OMB for approval. To comply with this requirement, FDA is publishing notice of the proposed collection of information set forth in this document.

With respect to the following collection of information, FDA invites comments on these topics: (1) Whether the proposed collection of information is necessary for the proper performance of FDA's functions, including whether the information will have practical utility; (2) the accuracy of FDA's estimate of the burden of the proposed collection of information, including the validity of the methodology and assumptions used; (3) ways to enhance the quality, utility, and clarity of the information to be collected; and (4) ways to minimize the burden of the collection of information on respondents, including through the use of automated collection techniques, when appropriate, and other forms of information technology.

Food Canning Establishment Registration, Process Filing, and Recordkeeping for Acidified Foods and Thermally Processed Low-Acid Foods in Hermetically Sealed Containers, 21 CFR 108.25 and 108.35, and 21 CFR Parts 113 and 114

OMB Control Number 0910–0037—Extension

Section 402 of the Federal Food, Drug, and Cosmetic Act (the FD&C Act) (21 U.S.C. 342) deems a food to be adulterated, in part, if the food bears or contains any poisonous or deleterious substance that may render it injurious to health. Section 301(a) of the FD&C Act (21 U.S.C. 331(a)) prohibits the introduction or delivery for introduction into interstate commerce of adulterated food. Under section 404 of the FD&C Act (21 U.S.C. 344), our regulations require registration of food processing establishments, filing of process or other data, and maintenance of processing and production records for acidified foods and thermally processed low-acid foods in hermetically sealed containers. These requirements are intended to ensure safe manufacturing, processing, and packing procedures, and to permit us to verify that these procedures are being followed. Improperly processed low-acid foods present life-threatening hazards if contaminated with foodborne microorganisms, especially *Clostridium botulinum.* The spores of *C. botulinum* need to be destroyed or inhibited to avoid production of the deadly toxin that causes botulism. This is

accomplished with good manufacturing procedures, which must include the use of adequate heat processes or other means of preservation.

To protect the public health, our regulations require that each firm that manufactures, processes, or packs acidified foods or thermally processed low-acid foods in hermetically sealed containers for introduction into interstate commerce register the establishment with us using Form FDA 2541 (§§ 108.25(c)(1) and 108.35(c)(2) (21 CFR 108.25(c)(1) and 108.35(c)(2)). In addition to registering the plant, each firm is required to provide data on the processes used to produce these foods, using Forms FDA 2541d, FDA 2541e, and FDA 2541f for all methods except aseptic processing, or Form FDA 2541g for aseptic processing of low-acid foods in hermetically sealed containers (§§ 108.25(c)(2) and 108.35(c)(2)). Plant registration and process filing may be accomplished simultaneously. Process data must be filed prior to packing any new product, and operating processes and procedures must be posted near the processing equipment or made available to the operator (21 CFR 113.87(a)).

Regulations in parts 108, 113, and 114 (21 CFR parts 108, 113, and 114) require firms to maintain records showing adherence to the substantive requirements of the regulations. These records must be made available to FDA on request. Firms also must document corrective actions when process controls and procedures do not fall within specified limits (§§ 113.89, 114.89, and 114.100(c)); to report any instance of potential health-endangering spoilage, process deviation, or contamination with microorganisms where any lot of the food has entered distribution in commerce (§§ 108.25(d) and 108.35(d) and (e)); and to develop and keep on file plans for recalling products that may endanger the public health (§§ 108.25(e) and 108.35(f)). To permit lots to be traced after distribution, acidified foods and thermally processed low-acid foods in hermetically sealed containers must be marked with an identifying code (§ 113.60(c)) (thermally processed foods) and § 114.80(b) (acidified foods).

The records of processing information are periodically reviewed during factory inspections by FDA to verify fulfillment of the requirements in parts 113 or 114. Scheduled thermal processes are examined and reviewed to determine their adequacy to protect public health. In the event of a public health emergency, records are used to pinpoint potentially hazardous foods rapidly and thus limit recall activity to affected lots.

As described in our regulations, processors may obtain the paper version of Forms FDA 2541, FDA 2541d, FDA 2541e, FDA 2541f, and FDA 2541g by contacting us at a particular address by visiting *https://www.fda.gov/Food/GuidanceRegulation/FoodFacilityRegistration/AcidifiedLACFRegistration/ucm2007436.htm.* Processors mail completed paper forms to us. However, processors who are subject to § 108.25, § 108.35, or both, have an option to submit Forms FDA 2541, FDA 2541d, FDA 2541e, FDA 2541f, and FDA 2541g electronically.

Although we encourage commercial processors to use the electronic submission system for plant registration and process filing, we will continue to make paper-based forms available. To standardize the burden associated with process filing, regardless of whether the process filing is submitted electronically or using a paper form, we are offering the public the opportunity to use four forms, each of which pertains to a specific type of commercial processing and is available both on the electronic submission system and as a paper-based form. The electronic submission system and paper-based form ''mirror'' each other to the extent practicable. The four process filing forms are as follows:

- Form FDA 2541d (Food Process Filing for Low-Acid Retorted Method);
- Form FDA 2541e (Food Process Filing for Acidified Method);
- Form FDA 2541f (Food Process Filing for Water Activity/Formulation Control Method); and
- Form FDA 2541g (Food Process Filing for Low-Acid Aseptic Systems).

At this time, the paper-based versions of the four forms and their instructions are all available for review at *https://www.fda.gov/Food/GuidanceRegulation/FoodFacilityRegistration/AcidifiedLACFRegistration/ucm2007436.htm.*

Description of Respondents: The respondents to this information collection are commercial processors and packers of acidified foods and thermally processed low-acid foods in hermetically sealed containers.

We estimate the burden of this collection of information as follows:

TABLE 1—ESTIMATED ANNUAL REPORTING BURDEN [1]

21 CFR section; activity	FDA Form No.	Number of respondents	Number of responses per respondent	Total annual responses	Average burden per response [2]	Total hours
108.25(c)(1) and 108.35(c)(1); Food canning establishment registration.	2541	645	1	645	0.17 (10 mins.)	110
108.25(c)(2); Food process filing for acidified method.	2541e	726	11	7,986	0.33 (20 mins.)	2,659
108.35(c)(2); Food process filing for low-acid retorted method.	2541d	336	12	4,032	0.33 (20 mins.)	1,343
108.35(c)(2); Food process filing for water activity/formulation control method.	2541f	37	6	222	0.33 (20 mins.)	74
108.35(c)(2); Food process filing for low-acid aseptic systems.	2541g	42	22	924	0.75 (45 mins.)	693
108.25(d); 108.35(d) and (e); Report of any instance of potential health-endangering spoilage, process deviation, or contamination with microorganisms where any lot of the food has entered distribution in commerce.	N/A	1	1	1	4	4
Total	.....	.....	.....	.....	.....	4,883

[1] There are no capital costs or operating and maintenance costs associated with this collection of information.
[2] The calculation for 20 minutes uses 0.333 hour.

Based on a review of the information collection since our last request for OMB approval, we have made no adjustments to our burden estimate. We base our estimate of the number of respondents in table 1 on registrations, process filings, and reports received. The hours per response reporting estimates are based on our experience with similar programs and information received from industry. The reporting burden for §§ 108.25(d) and 108.35(d) and (e) is minimal because notification of spoilage, process deviation, or contamination of product in distribution occurs less than once a year. Most firms discover these problems before the product is distributed and, therefore, are not required to report the occurrence. We estimate that we will receive one report annually under §§ 108.25(d) and 108.35(d) and (e). The report is expected to take 4 hours per response, for a total of 4 hours.

TABLE 2—ESTIMATED ANNUAL RECORDKEEPING BURDEN [1]

21 CFR part	Number of recordkeepers	Number of records per recordkeeper	Total annual records	Average burden per recordkeeping	Total hours
108, 113, and 114	10,392	1	10,392	250	2,598,000

[1] There are no capital costs or operating and maintenance costs associated with this collection of information.

We base our estimate of 10,392 recordkeepers in table 2 on the number of registered firms, excluding firms that were inactive or out of business, yet still registered. We estimate that 10,392 firms will each expend approximately 250 hours per year to fully satisfy the recordkeeping requirements in parts 108, 113 and 114, for a total of 2,598,000 hours.

Finally, our regulations require that processors mark thermally processed low-acid foods in hermetically sealed containers (§ 113.60(c)) and acidified foods (§ 114.80(b)) with an identifying code to permit lots to be traced after distribution. No burden has been estimated for the third-party disclosure requirements in §§ 113.60(c) and 114.80(b) because the coding process is done as a usual and customary part of normal business activities. Coding is a business practice in foods for liability purposes, inventory control, and process control in the event of a problem. Under 5 CFR 1320.3(b)(2), the time, effort, and financial resources necessary to comply with a collection of information are excluded from the burden estimate if the reporting, recordkeeping, or disclosure activities needed to comply are usual and customary because they would occur in the normal course of activities.

Dated: March 30, 2020.

Lowell J. Schiller,

Principal Associate Commissioner for Policy.

[FR Doc. 2020–07007 Filed 4–2–20; 8:45 am]

BILLING CODE 4164–01–P

DEPARTMENT OF HEALTH AND HUMAN SERVICES

Food and Drug Administration

[Docket No. FDA–2013–N–1619]

Agency Information Collection Activities; Submission for Office of Management and Budget Review; Comment Request; Good Manufacturing Practice in Manufacturing, Packaging, Labeling, or Holding Operations for Dietary Supplements

AGENCY: Food and Drug Administration, HHS.

ACTION: Notice.

SUMMARY: The Food and Drug Administration (FDA) is announcing that a proposed collection of information has been submitted to the Office of Management and Budget (OMB) for review and clearance under the Paperwork Reduction Act of 1995.

DATES: Submit written comments (including recommendations) on the collection of information by May 4, 2020.

ADDRESSES: To ensure that comments on the information collection are received, OMB recommends that written comments be submitted to *https://www.reginfo.gov/public/do/PRAMain.* Find this particular information collection by selecting ''Currently under Review—Open for Public Comments'' or by using the search function. The OMB control number for this information collection is 0910–0606. Also include the FDA docket number found in brackets in the heading of this document.

FOR FURTHER INFORMATION CONTACT: Domini Bean, Office of Operations, Food and Drug Administration, Three White Flint North, 10A–12M, 11601 Landsdown St., North Bethesda, MD 20852, 301–796–5733, *PRAStaff@fda.hhs.gov.*

SUPPLEMENTARY INFORMATION: In compliance with 44 U.S.C. 3507, FDA has submitted the following proposed collection of information to OMB for review and clearance.

Current Good Manufacturing Practice in Manufacturing, Packaging, Labeling, or Holding Operations for Dietary Supplements—21 CFR Part 111; OMB Control Number 0910–0606—Revision

The Dietary Supplement Health and Education Act (Pub. L. 103–417) added section 402(g) of the Federal Food, Drug, and Cosmetic Act (FD&C Act) (21 U.S.C. 342(g)), which provides, in part, that the Secretary of Health and Human Services may, by regulation, prescribe good manufacturing practice for dietary supplements. Section 402(g) of the FD&C Act also stipulates that such regulations will be modeled after current good manufacturing practice (CGMP) regulations for food and may not impose standards for which there are no current, and generally available, analytical methodology. Section 402(g)(1) of the FD&C Act states that a dietary supplement is adulterated if it has been prepared, packed, or held under conditions that do not meet current good manufacturing practice regulations.

Accordingly, we have promulgated regulations in part 111 (21 CFR part 111) establishing minimum CGMP requirements pertaining to the manufacturing, packaging, labeling, or holding of dietary supplements to ensure their quality. Included among the requirements is recordkeeping, documenting, planning, control, and improvement processes of a quality control system. Implementation of these processes in a manufacturing operation serves as the backbone to CGMP. The records must show what is being manufactured and whether the controls

in place ensure the product's identity, purity, strength, and composition, and that limits on contaminants and measures to prevent adulteration are effective. Further, records must show whether and what deviations from control processes occurred, facilitate evaluation and corrective action concerning these deviations (including, where necessary, whether associated batches of product should be recalled from the marketplace), and enable a manufacturer to assure that the corrective action was effective. We believe the regulations in part 111 establish the minimum manufacturing practices necessary to ensure that dietary supplements are manufactured, packaged, labeled, or held in a manner that will ensure the quality of the dietary supplements during manufacturing, packaging, labeling, or holding operations.

Specifically, the recordkeeping requirements of the regulations in part 111 include establishing written procedures and maintaining records pertaining to: (1) Personnel; (2) sanitation; (3) calibration of instruments and controls; (4) calibration, inspection, or checks of automated, mechanical, or electronic equipment; (5) maintaining, cleaning, and sanitizing equipment and utensils and other contact surfaces; (6) water used that may become a component of the dietary supplement; (7) production and process controls; (8) quality control; (9) components, packaging, labels, and product received for packaging and labeling; (10) master manufacturing and batch production; (11) laboratory operations; (12) manufacturing operations; (13) packaging and labeling operations; (14) holding and distributing operations; (15) returned dietary supplements; and (16) product complaints.

Section 111.75 (21 CFR 111.75) reflects FDA's determination that manufacturers that test or examine 100 percent of the incoming dietary ingredients for identity can be assured of the identity of the ingredient. However, we recognize that it may be possible for a manufacturer to demonstrate, through various methods and processes in use over time for its particular operation, that a system of less than 100 percent identity testing would result in no material diminution of assurance of the identity of the dietary ingredient as compared to the assurance provided by 100 percent identity testing. Section 111.75 provides an opportunity for a manufacturer to make such a showing and reduce the frequency of identity testing of components that are dietary ingredients from 100 percent to some lower frequency. Section 111.75 sets forth the information a manufacturer is required to submit for an exemption from the requirement of 100 percent identity testing when a manufacturer petitions the Agency for such an exemption to 100 percent identity testing under 21 CFR 10.30, and the Agency grants such exemption. This reporting burden is currently accounted for under OMB control number 0910–0608, Petition to Request an Exemption from 100 Percent Identity Testing of Dietary Ingredients: CGMP in Manufacturing, Packaging, Labeling or Holding Operations for Dietary Supplements. With this notice, we propose to consolidate information collection under § 111.75 into the instant and related information collection.

Description of Respondents: Manufacturers, dietary supplement manufacturers, packagers and repackagers, labelers and re-labelers, holders, distributors, warehousers, exporters, importers, large businesses, and small businesses engaged in the dietary supplement industry.

In the **Federal Register** of December 5, 2019 (84 FR 66678), we published a 60-day notice requesting public comment on the proposed collection of information. No comments were received.

We estimate the burden of this collection of information as follows:

TABLE 1—ESTIMATED ANNUAL RECORDKEEPING BURDEN [1]

21 CFR section; activity	Number of recordkeepers	Number of records per recordkeeper	Total annual records	Average burden per recordkeeping	Total hours
111.14; records of personnel practices, including documentation of training.	15,000	4	60,000	1	60,000
111.23; records of physical plant sanitation practices, including pest control and water quality.	15,000	1	15,000	0.2 (12 minutes)	3,000
111.35; records of equipment and utensils calibration and sanitation practices.	400	1	400	12.5	5,000
111.95; records of production and process control systems.	250	1	250	45	11,250
111.140; records that quality control personnel must make and keep.	240	1,163	279,120	1	279,120
111.180; records associated with components, packaging, labels, and product received for packaging and labeling as a dietary supplement.	240	1,163	279,120	1	279,120
111.210; requirements for what the master manufacturing record must include.	240	1	240	2.5	600
111.260; requirements for what the batch record must include.	145	1,408	204,160	1	204,160
111.325; records that quality control personnel must make and keep for laboratory operations.	120	1	120	15	1,800
111.375; records of the written procedures established for manufacturing operations.	260	1	260	2	520
111.430; records of the written procedures for packaging and labeling operations.	50	1	50	12.6	630
111.475; records of product distribution and procedures for holding and distributing operations.	15,000	1	15,000	0.4 (24 minutes)	6,000
111.535; records for returned dietary supplements.	110	4	440	13.5	5,940
111.570; records regarding product complaints	240	600	144,000	0.5 (30 minutes)	72,000

TABLE 1—ESTIMATED ANNUAL RECORDKEEPING BURDEN [1]—Continued

21 CFR section; activity	Number of recordkeepers	Number of records per recordkeeper	Total annual records	Average burden per recordkeeping	Total hours
Total					929,140

[1] There are no capital costs or operating and maintenance costs associated with this collection of information.

TABLE 2—ESTIMATED ANNUAL REPORTING BURDEN [1]

21 CFR section; activity	Number of respondents	Number of responses per respondent	Total annual responses	Average burden per response	Total hours
111.75; petition for exemption from 100 percent identity testing	1	1	1	8	8

[1] There are no capital costs or operating and maintenance costs associated with this collection of information.

We have made no changes to our estimate of the information collection based on our most recent review. However, in consolidating burden from information collection previously accounted for under OMB control number 0910–0608, the information collection reflects an increase of 8 hours and one response annually.

Dated: March 26, 2020.

Lowell J. Schiller,

Principal Associate Commissioner for Policy.

[FR Doc. 2020–07000 Filed 4–2–20; 8:45 am]

BILLING CODE 4164–01–P

DEPARTMENT OF HEALTH AND HUMAN SERVICES

National Institutes of Health

National Institute on Deafness and Other Communication Disorders; Amended Notice of Meeting

Notice is hereby given of a change in the meeting of the Board of Scientific Counselors, NIDCD, March 30, 2020, 8:15 a.m. to March 31, 2020, 4:15 p.m., PORTER NEUROSCIENCE RESEARCH CENTER, Building 35A, 35 Convent Drive, Bethesda, MD 20892 which was published in the **Federal Register** on March 4, 2020, 85 FR 12796.

This notice is being amended to change the meeting location from Bldg. 35A to a virtual meeting. The URL link to this meeting is: *https://nih.webex.com/nih/j.php?MTID=mf89176f712a4e0c93a5c0bb2ea70d9ad.* Any member of the public may submit written comments no later than 15 days after meeting. The meeting is partially Closed to the public.

Dated: March 30, 2020.

Miguelina Perez,

Program Analyst, Office of Federal Advisory Committee Policy.

[FR Doc. 2020–06942 Filed 4–2–20; 8:45 am]

BILLING CODE 4140–01–P

DEPARTMENT OF HEALTH AND HUMAN SERVICES

National Institutes of Health

National Institute of Allergy and Infectious Diseases; Amended Notice of Meeting

Notice is hereby given of a change in the meeting of the Microbiology and Infectious Diseases Research Committee, June 04, 2020, 09:00 a.m. to June 05, 2020, 06:00 p.m., Embassy Suites Hotel, 4300 Military Road, Washington, DC 20015 which was published in the **Federal Register** on January 16, 2020, 85 FR 515.

This meeting notice is amended to change the meeting type from regular in person to teleconference.

The meeting is closed to the public.

Dated: March 30, 2020.

Tyeshia M. Roberson,

Program Analyst, Office of Federal Advisory Committee Policy.

[FR Doc. 2020–06970 Filed 4–2–20; 8:45 am]

BILLING CODE 4140–01–P

DEPARTMENT OF HEALTH AND HUMAN SERVICES

National Institutes of Health

National Institute on Aging; Notice of Closed Meetings

Pursuant to section 10(d) of the Federal Advisory Committee Act, as amended, notice is hereby given of the following meetings.

The meetings will be closed to the public in accordance with the provisions set forth in sections 552b(c)(4) and 552b(c)(6), Title 5 U.S.C., as amended. The grant applications and the discussions could disclose confidential trade secrets or commercial property such as patentable material, and personal information concerning individuals associated with the grant applications, the disclosure of which would constitute a clearly unwarranted invasion of personal privacy.

Name of Committee: National Institute on Aging Special Emphasis Panel; Drug Repositioning and Combination Therapy for AD.

Date: May 6, 2020.

Time: 10:00 a.m. to 2:00 p.m.

Agenda: To review and evaluate grant applications.

Place: National Institute on Aging, Gateway Building, 7201 Wisconsin Avenue, Bethesda, MD 20892 (Telephone Conference Call).

Contact Person: Alexander Parsadanian, Ph.D., Scientific Review Officer, Scientific Review Branch, National Institute on Aging, National Institutes of Health, Gateway Building 2C/212, 7201 Wisconsin Avenue, Bethesda, MD 20892, (301) 496–9666, *parsadaniana@nia.nih.gov.*

Name of Committee: National Institute on Aging Special Emphasis Panel; Alzheimer's Disease Drug Development.

Date: May 13, 2020.

Time: 12:00 p.m. to 3:00 p.m.

Agenda: To review and evaluate grant applications.

Place: National Institute on Aging, Gateway Building, 7201 Wisconsin Avenue, Bethesda, MD 20892 (Telephone Conference Call).

Contact Person: Alexander Parsadanian, Ph.D., Scientific Review Officer, Scientific Review Branch, National Institute on Aging, National Institutes of Health, Gateway Building, 2C/212, 7201 Wisconsin Avenue, Bethesda, MD 20892, (301) 496–9666, *parsadaniana@nia.nih.gov.*

(Catalogue of Federal Domestic Assistance Program Nos. 93.866, Aging Research, National Institutes of Health, HHS)

Dated: March 30, 2020.

Miguelina Perez,

Program Analyst, Office of Federal Advisory Committee Policy.

[FR Doc. 2020–06941 Filed 4–2–20; 8:45 am]

BILLING CODE 4140–01–P

DEPARTMENT OF HOMELAND SECURITY

Coast Guard

[Docket No. USCG–2020–0095]

Merchant Mariner Medical Advisory Committee; April 2020 Teleconference

AGENCY: U.S. Coast Guard, Department of Homeland Security.

ACTION: Notice of Federal Advisory Committee teleconference meeting.

SUMMARY: The Merchant Mariner Medical Advisory Committee (Committee) and its working groups will meet via teleconference to discuss matters relating to medical certification determinations for issuance of licenses, certificates of registry, and merchant mariners' documents, medical standards and guidelines for the physical qualifications of operators of commercial vessels, medical examiner education, and medical research.

DATES: *Meeting:* The Merchant Mariner Medical Advisory Committee and its working groups will meet by teleconference on Wednesday, April 29, 2020, from 8:00 a.m. until 11:00 a.m. The teleconference may adjourn early if the Committee has completed its business.

Comments and supporting documentation: To ensure your comments are received by Committee members before the teleconference, submit your written comments no later than April 22, 2020.

ADDRESSES: To join the teleconference or to request special accommodations, contact the individual listed in the **FOR FURTHER INFORMATION CONTACT** section no later than 1 p.m. on April 22, 2020, to obtain the needed information. The number of teleconferences lines is limited and will be available on a first-come, first-served basis.

Instructions: You are free to submit comments at any time, including orally at the teleconference as time permits, but if you want Committee members to review your comment before the teleconference, please submit your comments no later than April 22, 2020. We are particularly interested in comments on the issues in the ''Agenda'' section below. We encourage you to submit comments through the Federal eRulemaking Portal at *https://www.regulations.gov.* If your material cannot be submitted using *https://www.regulations.gov,* call or email the individual in the **FOR FURTHER INFORMATION CONTACT** section of this document for alternate instructions. You must include the docket number [USCG–2020–0095]. Comments received will be posted without alteration at *http://www.regulations.gov,* including any personal information provided. For more about privacy and submissions in response to this document, see DHS's eRulemaking System of Records notice (85 FR 14226, March 11, 2020).

If you encounter technical difficulties with comment submission, contact the individual listed in the **FOR FURTHER INFORMATION CONTACT** section of this notice.

Docket Search: Documents mentioned in this notice as being available in the docket, and all public comments, will be in our online docket at *https://www.regulations.gov* and can be viewed by following that website's instructions. Additionally, if you go to the online docket and sign-up for email alerts, you will be notified when comments are posted.

FOR FURTHER INFORMATION CONTACT: Ms. Megan Johns Henry, Alternate Designated Federal Officer of the Merchant Mariner Medical Advisory Committee, 2703 Martin Luther King Jr. Ave SE, Stop 7509, Washington, DC 20593–7509, telephone 202–372–1255, fax 202–372–4908 or *megan.c.johns@uscg.mil.*

SUPPLEMENTARY INFORMATION: Notice of this meeting is in compliance with the *Federal Advisory Committee Act,* 5 U.S.C. Appendix.

The Merchant Mariner Medical Advisory Committee Meeting is authorized by U.S. Code, Title 46, section 7115. The Committee advises the Secretary of the Department of Homeland Security on matters related to (a) medical certification determinations for issuance of licenses, certificates of registry, and merchant mariners' documents; (b) medical standards and guidelines for the physical qualifications of operators of commercial vessels; (c) medical examiner education; and (d) medical research.

Agenda

The agenda for the April 29, 2020, teleconference is as follows:

(1) Introduction.

(2) Designated Federal Officer remarks.

(3) Remarks from the Committee Chairman.

(4) Remarks from U.S. Coast Guard Leadership.

(5) Roll call of Committee members and determination of a quorum.

(6) The Committee will address the following task statements which are available for viewing at *https://homeport.uscg.mil/missions/ports-and-waterways/safety-advisory-committees/merpac;*

(a) Task Statement 19–29, Review of CG Forms CG–719K and CG–719K/E

(7) Report on Status of Working Groups, Determination on Intercessional Meetings and Discussion of Working Group recommendations. The Committee will review the information presented on each issue, deliberate on any recommendations presented by the Working Groups, approve/formulate recommendations and close any completed tasks. Official action on these recommendations may be taken:

(a) Task Statement 17–26, Regulatory Reform;

(b) Task Statement 18–27, Mariner Mental Health;

(c) Task Statement 18–28, External Stakeholder Communication; and

(d) Task Statement 19–29, Review of CG Forms CG–719K and CG–719K/E;

(8) Public comment period.

(9) Closing remarks/plans for next meeting.

(10) Adjournment of meeting.

A copy of all meeting documentation will be available at *https://homeport.uscg.mil/missions/ports-and-waterways/safety-advisory-committees/medmac* no later than April 22, 2020. Alternatively, you may contact Ms. Megan Johns Henry as noted in the **FOR FURTHER INFORMATION** section above.

During the April 29, 2020 teleconference, a public comment period will be held from approximately 10:00–10:15 a.m. Public comments will be limited to two minutes per speaker. Please note that the public comment periods will end following the last call for comments.

Please contact the individual listed in the **FOR FURTHER INFORMATION CONTACT** section, to register as a speaker.

Dated: March 31, 2020.

Jeffrey G. Lantz,

Director of Commercial Regulations and Standards.

[FR Doc. 2020–07041 Filed 4–2–20; 8:45 am]

BILLING CODE 9110–04–P

DEPARTMENT OF HOMELAND SECURITY

Coast Guard

[Docket No. USCG–2010–0164]

National Boating Safety Advisory Council; April 2020 Teleconference

AGENCY: U.S. Coast Guard, Department of Homeland Security.

ACTION: Notice of Federal Advisory Committee teleconference meeting.

SUMMARY: The National Boating Safety Advisory Council (Council) and its working groups will meet via teleconference to discuss matters relating to recreational boating safety. These meetings will be open to the public.

DATES: *Meeting:* The National Boating Safety Advisory Council and its working groups will meet by teleconference on Wednesday, April 22, 2020, from 1:00 p.m. until 5:00 p.m. (Eastern Daylight Time). The teleconference may adjourn early if the Council has completed its business.

Comments and supporting documentation: To ensure your comments are received by Council members before the teleconference, submit your written comments no later than April 15, 2020.

ADDRESSES: To join the teleconference or to request special accommodations, contact the individual listed in the **FOR FURTHER INFORMATION CONTACT** section no later than 1 p.m. on April 15, 2020, to obtain the needed information. The number of teleconference lines is limited and will be available on a first-come, first-served basis.

Instructions: You are free to submit comments at any time, including orally at the teleconference as time permits, but if you want Council members to review your comment before the teleconference, please submit your comments no later than April 15, 2020. We are particularly interested in comments on the issues in the ''Agenda'' section below. We encourage you to submit comments through the Federal eRulemaking Portal at *https://www.regulations.gov.* If your material cannot be submitted using *https://www.regulations.gov,* call or email the individual in the **FOR FURTHER INFORMATION CONTACT** section of this document for alternate instructions. You must include the docket number [USCG–2010–0164]. Comments received will be posted without alteration at *http://www.regulations.gov,* including any personal information provided. For more about privacy and submissions in response to this document, see DHS's eRulemaking System of Records notice (85 FR 14226, March 11, 2020). If you encounter technical difficulties with comment submission, contact the individual listed in the **FOR FURTHER INFORMATION CONTACT** section of this notice.

Docket Search: Documents mentioned in this notice as being available in the docket, and all public comments, will be in our online docket at *https://www.regulations.gov* and can be viewed by following that website's instructions. Additionally, if you go to the online docket and sign-up for email alerts, you will be notified when comments are posted.

FOR FURTHER INFORMATION CONTACT: Mr. Jeff Decker, Alternate Designated Federal Officer of the National Boating Safety Advisory Council, 2703 Martin Luther King Jr. Ave SE, Stop 7509, Washington, DC 20593–7509, telephone 202–372–1507 or *NBSAC@uscg.mil.*

SUPPLEMENTARY INFORMATION: Notice of this meeting is given pursuant to the *Federal Advisory Committee Act,* (5 U.S.C., Appendix). Congress established the National Boating Safety Advisory Council in the *Federal Boat Safety Act of 1971* (Public Law 92–75). The National Boating Safety Advisory Council provides advice and recommendations to the Department of Homeland Security on matters relating to recreational vessels and associated equipment and on other safety matters related to recreational vessels.

Agenda

The agenda for the National Boating Safety Advisory Council meeting is as follows:

Wednesday, April 22, 2020

(1) Call to Order.

(2) Opening remarks.

(3) Receipt and discussion of the following reports from the Office of Auxiliary and Boating Safety:

(a) Update on the U.S. Coast Guard's implementation of National Boating Safety Advisory Council Recommendations and Recreational Boating Safety Program Report.

(b) Alternate Designated Federal Officer's report concerning Council administrative and logistical matters including updates on key elements affecting the Council.

(c) 2019 National Recreational Boating Safety Survey Results.

(d) BSX–22 update on the National Recreational Boating Grant Program.

(e) Update on the current USCG RBS Strategic Plan and discussion of the 2022–2026 Strategic Plan.

(4) National Boating Safety Advisory Council discussion on initiating a boating safety program on the use and benefits of cut-off switches for recreational vessels.

(5) National Boating Safety Advisory Council discussion on exemption from carriage of throwable personal flotation devices requirement for rafts over 16 feet in length.

(6) National Boating Safety Advisory Council discussion on Associated Equipment; specifically related to protective gear for Personal Watercraft operators and passengers and in general when applied to all boats.

(7) Update of the National Association of State Boating Law Administrator's Engineering, Research and Analysis committee's work over the past year and next steps.

(8) Presentation and discussion on the Sport Fish Restoration and Boating Safety Trust Fund.

(9) Closing remarks/plans for next meeting.

(10) Adjournment of meeting.

A copy of all meeting documentation will be available at *https://homeport.uscg.mil/missions/ports-and-waterways/safety-advisory-committees/nbsac* no later than April 15, 2020. Alternatively, you may contact Mr. Jeff Decker as noted in the **FOR FURTHER INFORMATION CONTACT** section above.

During the April 22, 2020 teleconference, a public comment period will be held from approximately 3:00 p.m.–3:30 p.m. Public comments will be limited to two minutes per speaker. Please note that the public comment periods will end following the last call for comments.

Please contact the individual listed in the **FOR FURTHER INFORMATION CONTACT** section, to register as a speaker.

Dated: March 30, 2020.

David Barata,

Captain, U.S. Coast Guard, Director of Inspections and Compliance.

[FR Doc. 2020–06964 Filed 4–2–20; 8:45 am]

BILLING CODE 9110–04–P

DEPARTMENT OF HOMELAND SECURITY

U.S. Customs and Border Protection

Quarterly IRS Interest Rates Used in Calculating Interest on Overdue Accounts and Refunds on Customs Duties

AGENCY: U.S. Customs and Border Protection, Department of Homeland Security.

ACTION: General notice.

SUMMARY: This notice advises the public that the quarterly Internal Revenue Service interest rates used to calculate interest on overdue accounts (underpayments) and refunds (overpayments) of customs duties will remain the same from the previous quarter. For the calendar quarter beginning April 1, 2020, the interest rates for overpayments will be 4 percent for corporations and 5 percent for non-corporations, and the interest rate for underpayments will be 5 percent for both corporations and non-corporations. This notice is published for the convenience of the importing public and U.S. Customs and Border Protection personnel.

DATES: The rates announced in this notice are applicable as of April 1, 2020.

FOR FURTHER INFORMATION CONTACT: Bruce Ingalls, Revenue Division, Collection Refunds & Analysis Branch, 6650 Telecom Drive, Suite #100, Indianapolis, Indiana 46278; telephone (317) 298–1107.

SUPPLEMENTARY INFORMATION:

Background

Pursuant to 19 U.S.C. 1505 and Treasury Decision 85–93, published in the **Federal Register** on May 29, 1985 (50 FR 21832), the interest rate paid on applicable overpayments or underpayments of customs duties must be in accordance with the Internal Revenue Code rate established under 26 U.S.C. 6621 and 6622. Section 6621 provides different interest rates applicable to overpayments: One for corporations and one for non-corporations.

The interest rates are based on the Federal short-term rate and determined by the Internal Revenue Service (IRS) on behalf of the Secretary of the Treasury on a quarterly basis. The rates effective for a quarter are determined during the first-month period of the previous quarter.

In Revenue Ruling 2020–7, the IRS determined the rates of interest for the calendar quarter beginning April 1, 2020, and ending on June 30, 2020. The interest rate paid to the Treasury for underpayments will be the Federal short-term rate (2%) plus three percentage points (3%) for a total of five percent (5%) for both corporations and non-corporations. For corporate overpayments, the rate is the Federal short-term rate (2%) plus two percentage points (2%) for a total of four percent (4%). For overpayments made by non-corporations, the rate is the Federal short-term rate (2%) plus three percentage points (3%) for a total of five percent (5%). These interest rates used to calculate interest on overdue accounts (underpayments) and refunds (overpayments) of customs duties are remaining the same from the previous quarter. These interest rates are subject to change for the calendar quarter beginning July 1, 2020, and ending on September 30, 2020.

For the convenience of the importing public and U.S. Customs and Border Protection personnel, the following list of IRS interest rates used, covering the period from July of 1974 to date, to calculate interest on overdue accounts and refunds of customs duties, is published in summary format.

Beginning date	Ending date	Underpayments (percent)	Overpayments (percent)	Corporate overpayments (Eff. 1–1–99) (percent)
070174	063075	6	6	
070175	013176	9	9	
020176	013178	7	7	
020178	013180	6	6	
020180	013182	12	12	
020182	123182	20	20	
010183	063083	16	16	
070183	123184	11	11	
010185	063085	13	13	
070185	123185	11	11	
010186	063086	10	10	
070186	123186	9	9	
010187	093087	9	8	
100187	123187	10	9	
010188	033188	11	10	
040188	093088	10	9	
100188	033189	11	10	
040189	093089	12	11	
100189	033191	11	10	
040191	123191	10	9	
010192	033192	9	8	
040192	093092	8	7	
100192	063094	7	6	
070194	093094	8	7	
100194	033195	9	8	
040195	063095	10	9	
070195	033196	9	8	
040196	063096	8	7	
070196	033198	9	8	
040198	123198	8	7	
010199	033199	7	7	6
040199	033100	8	8	7
040100	033101	9	9	8
040101	063001	8	8	7
070101	123101	7	7	6
010102	123102	6	6	5
010103	093003	5	5	4
100103	033104	4	4	3
040104	063004	5	5	4

Beginning date	Ending date	Underpayments (percent)	Overpayments (percent)	Corporate overpayments (Eff. 1–1–99) (percent)
070104	093004	4	4	3
100104	033105	5	5	4
040105	093005	6	6	5
100105	063006	7	7	6
070106	123107	8	8	7
010108	033108	7	7	6
040108	063008	6	6	5
070108	093008	5	5	4
100108	123108	6	6	5
010109	033109	5	5	4
040109	123110	4	4	3
010111	033111	3	3	2
040111	093011	4	4	3
100111	033116	3	3	2
040116	033118	4	4	3
040118	123118	5	5	4
010119	063019	6	6	5
070119	093020	5	5	4

Dated: March 30, 2020.

Jeffrey Caine,

Acting Chief Financial Officer, U.S. Customs and Border Protection.

[FR Doc. 2020–06974 Filed 4–2–20; 8:45 am]

BILLING CODE 9111–14–P

DEPARTMENT OF HOMELAND SECURITY

Federal Emergency Management Agency

[Docket ID FEMA–2020–0002; Internal Agency Docket No. FEMA–B–2023]

Changes in Flood Hazard Determinations

AGENCY: Federal Emergency Management Agency, DHS.

ACTION: Notice.

SUMMARY: This notice lists communities where the addition or modification of Base Flood Elevations (BFEs), base flood depths, Special Flood Hazard Area (SFHA) boundaries or zone designations, or the regulatory floodway (hereinafter referred to as flood hazard determinations), as shown on the Flood Insurance Rate Maps (FIRMs), and where applicable, in the supporting Flood Insurance Study (FIS) reports, prepared by the Federal Emergency Management Agency (FEMA) for each community, is appropriate because of new scientific or technical data. The FIRM, and where applicable, portions of the FIS report, have been revised to reflect these flood hazard determinations through issuance of a Letter of Map Revision (LOMR), in accordance with Federal Regulations. The LOMR will be used by insurance agents and others to calculate appropriate flood insurance premium rates for new buildings and the contents of those buildings. For rating purposes, the currently effective community number is shown in the table below and must be used for all new policies and renewals.

DATES: These flood hazard determinations will be finalized on the dates listed in the table below and revise the FIRM panels and FIS report in effect prior to this determination for the listed communities.

From the date of the second publication of notification of these changes in a newspaper of local circulation, any person has 90 days in which to request through the community that the Deputy Associate Administrator for Insurance and Mitigation reconsider the changes. The flood hazard determination information may be changed during the 90-day period.

ADDRESSES: The affected communities are listed in the table below. Revised flood hazard information for each community is available for inspection at both the online location and the respective community map repository address listed in the table below. Additionally, the current effective FIRM and FIS report for each community are accessible online through the FEMA Map Service Center at *https://msc.fema.gov* for comparison.

Submit comments and/or appeals to the Chief Executive Officer of the community as listed in the table below.

FOR FURTHER INFORMATION CONTACT: Rick Sacbibit, Chief, Engineering Services Branch, Federal Insurance and Mitigation Administration, FEMA, 400 C Street SW, Washington, DC 20472, (202) 646–7659, or (email) *patrick.sacbibit@fema.dhs.gov;* or visit the FEMA Mapping and Insurance eXchange (FMIX) online at *https://www.floodmaps.fema.gov/fhm/fmx_main.html.*

SUPPLEMENTARY INFORMATION: The specific flood hazard determinations are not described for each community in this notice. However, the online location and local community map repository address where the flood hazard determination information is available for inspection is provided.

Any request for reconsideration of flood hazard determinations must be submitted to the Chief Executive Officer of the community as listed in the table below.

The modifications are made pursuant to section 201 of the Flood Disaster Protection Act of 1973, 42 U.S.C. 4105, and are in accordance with the National Flood Insurance Act of 1968, 42 U.S.C. 4001 *et seq.,* and with 44 CFR part 65.

The FIRM and FIS report are the basis of the floodplain management measures that the community is required either to adopt or to show evidence of having in effect in order to qualify or remain qualified for participation in the National Flood Insurance Program (NFIP).

These flood hazard determinations, together with the floodplain management criteria required by 44 CFR 60.3, are the minimum that are required. They should not be construed to mean that the community must change any existing ordinances that are more stringent in their floodplain management requirements. The community may at any time enact stricter requirements of its own or pursuant to policies established by other Federal, State, or regional entities. The

flood hazard determinations are in accordance with 44 CFR 65.4.

The affected communities are listed in the following table. Flood hazard determination information for each community is available for inspection at both the online location and the respective community map repository address listed in the table below. Additionally, the current effective FIRM and FIS report for each community are accessible online through the FEMA Map Service Center at *https://msc.fema.gov* for comparison.

(Catalog of Federal Domestic Assistance No. 97.022, ''Flood Insurance.'')

Michael M. Grimm,

Assistant Administrator for Risk Management, Department of Homeland Security, Federal Emergency Management Agency.

State and county	Location and case No.	Chief executive officer of community	Community map repository	Online location of letter of map revision	Date of modification	Community No.
Colorado: Broomfield.	City and County of Broomfield (19–08–1004P).	The Honorable Patrick Quinn, Mayor, City and County of Broomfield, 1 DesCombes Drive, Broomfield, CO 80020.	Engineering Department, 1 DesCombes Drive, Broomfield, CO 80020.	*https://msc.fema.gov/portal/advanceSearch.*	May 6, 2020	085073
Florida:						
Lee	City of Sanibel, (19–04–6595P).	The Honorable Kevin Ruane, Mayor, City of Sanibel, 800 Dunlop Road, Sanibel, FL 33957.	Community Services Department, 800 Dunlop Road, Sanibel, FL 33957.	*https://msc.fema.gov/portal/advanceSearch.*	Jul. 15, 2020	120402
Monroe	Unincorporated areas of Monroe County, (20–04–1422P).	The Honorable Heather Carruthers, Mayor, Monroe County Board of Commissioners, 500 Whitehead Street, Suite 102, Key West, FL 33040.	Monroe County Building Department, 2798 Overseas Highway, Suite 300, Marathon, FL 33050.	*https://msc.fema.gov/portal/advanceSearch.*	Jul. 21, 2020	125129
Palm Beach ...	City of Westlake, (19–04–3409P).	Mr. Kenneth G. Cassel, City of Westlake Manager, 4001 Seminole Pratt, Whitney Road, Westlake, FL 33470.	City Hall, 4001 Seminole Pratt, Whitney Road, Westlake, FL 33470.	*https://msc.fema.gov/portal/advanceSearch.*	Jul. 15, 2020	120018
Massachusetts:						
Plymouth	Town of Duxbury, (20–01–0284P).	The Honorable David J. Madigan, Chairman, Town of Duxbury Board of Selectmen, 878 Tremont Street, Duxbury, MA 02332.	Planning Department, 878 Tremont Street, Duxbury, MA 02332.	*https://msc.fema.gov/portal/advanceSearch.*	Jul. 6, 2020	250263
Plymouth	Town of Marshfield, (20–01–0284P).	The Honorable Joseph E. Kelleher, Chairman, Town of Marshfield Board of Selectmen, 870 Moraine Street, Marshfield, MA 02050.	Building Department, 870 Moraine Street, Marshfield, MA 02050.	*https://msc.fema.gov/portal/advanceSearch.*	Jul. 6, 2020	250273
North Carolina:						
Wake County	Town of Cary (19–04–3102P.	The Honorable Harold Weinbrecht, Mayor, Town of Cary, P.O. Box 8005, Cary, NC 27512.	Stormwater Services Division, 316 North Academy Street, Cary, NC 27513.	*http://msc.fema.gov/portal/advanceSearch.*	Apr. 15, 2020	370238
Wake County	Town of Morrisville, (19–04–3102P.	The Honorable T.J. Cawley, Mayor, Town of Morrisville, 100 Town Hall Drive, Morrisville, NC 27560.	Planning Department, 260 Town Hall Drive, Suite B, Morrisville, NC 27560.	*http://msc.fema.gov/portal/advanceSearch.*	Apr. 15, 2020	370242
Oklahoma:						
Tulsa	City of Tulsa, (18–06–3174P).	The Honorable G.T. Bynum, Mayor, City of Tulsa, 175 East 2nd Street, Tulsa, OK 74103.	Development Services Department, 175 East 2nd Street, Suite 450, Tulsa, OK 74103.	*https://msc.fema.gov/portal/advanceSearch.*	Jul. 9, 2020	405381
Tulsa	City of Tulsa, (19–06–3205P).	The Honorable G.T. Bynum, Mayor, City of Tulsa, 175 East 2nd Street, Tulsa, OK 74103.	Development Services Department, 175 East 2nd Street, Suite 450, Tulsa, OK 74103.	*https://msc.fema.gov/portal/advanceSearch.*	Jun. 25, 2020	405381
Pennsylvania:						
Lackawanna ...	Borough of Jermyn, (20–03–0330P).	The Honorable Frank Kulick, President, Borough of Jermyn Council, 440 Jefferson Avenue, Jermyn, PA 18433.	Borough Hall, 440 Jefferson Avenue, Jermyn, PA 18433.	*https://msc.fema.gov/portal/advanceSearch.*	Aug. 6, 2020	420530
Lackawanna ...	Borough of Mayfield, (20–03–0330P).	The Honorable Alexander J. Chelik, Mayor, Borough of Mayfield, 739 Penn Avenue, Mayfield, PA 18433.	Borough Hall, 739 Penn Avenue, Mayfield, PA 18433.	*https://msc.fema.gov/portal/advanceSearch.*	Aug. 6, 2020	420532

State and county	Location and case No.	Chief executive officer of community	Community map repository	Online location of letter of map revision	Date of modification	Community No.
Lackawanna ...	Township of Carbondale, (20–03–0330P).	The Honorable Paul Figliomeni, Chairman, Township of Carbondale Board of Supervisors, 103 School Street, Childs, PA 18407.	Township Hall, 103 School Street, Childs, PA 18407.	*https://msc.fema.gov/portal/advanceSearch.*	Aug. 6, 2020	421750
Montgomery ...	Township of Whitpain, (19–03–1425P).	The Honorable Frederick R. Conner, Jr., Chairman, Township of Whitpain Board of Supervisors, 960 Wentz Road, Blue Bell, PA 19422.	Township Hall, 960 Wentz Road, Blue Bell, PA 19422.	*https://msc.fema.gov/portal/advanceSearch.*	Jul. 6, 2020	420713
Rhode Island:						
Washington	Town of Hopkinton, (20–01–0268P).	The Honorable Frank Landolfi, President, Town of Hopkinton Council, 1 Town House Road, Hopkinton, RI 02833.	Town Hall, 1 Town House Road, Hopkinton, RI 02833.	*https://msc.fema.gov/portal/advanceSearch.*	Jul. 6, 2020	440028
Washington	Town of Richmond, (20–01–0268P).	The Honorable Rich Nassaney, President, Town of Richmond Council, 5 Richmond Townhouse Road, Wyoming, RI 02898.	Town Hall, 5 Richmond Townhouse Road, Wyoming, RI 02898.	*https://msc.fema.gov/portal/advanceSearch.*	Jul. 6, 2020	440031
Tennessee:						
Shelby	Town of Collierville, (18–04–7494P).	The Honorable Stan Joyner, Jr., Mayor, Town of Collierville, 500 Poplar View Parkway, Collierville, TN 38017.	Department of Public Services, 500 Keough Road, Collierville, TN 38017.	*https://msc.fema.gov/portal/advanceSearch.*	May 8, 2020	470263
Shelby	Unincorporated areas of Shelby County, (18–04–7494P).	The Honorable Lee Harris, Mayor, Shelby County, 160 North Main Street, Memphis, TN 38103.	Shelby County Department of Engineering, 6463 Haley Road, Memphis, TN 38134.	*https://msc.fema.gov/portal/advanceSearch.*	May 8, 2020	470214
Texas:						
Bell	City of Harker Heights, (18–06–3437P).	The Honorable Spencer H. Smith, Mayor, City of Harker Heights, 305 Millers Crossing, Harker Heights, TX 76548.	Building and Permits Department, 305 Millers Crossing, Harker Heights, TX 76548.	*https://msc.fema.gov/portal/advanceSearch.*	Jun. 17, 2020	480029
Bexar	City of San Antonio, (19–06–1390P).	The Honorable Ron Nirenberg, Mayor, City of San Antonio, P.O. Box 839966, San Antonio, TX 78283.	Transportation and Capitol Improvements Department, Storm Water Division, 114 West Commerce Street, 7th Floor, San Antonio, TX 78205.	*https://msc.fema.gov/portal/advanceSearch.*	Jun. 22, 2020	480045
Bexar	Unincorporated areas of Bexar County, (19–06–3386P).	The Honorable Nelson W. Wolff, Bexar County Judge, 101 West Nueva Street, 10th Floor, San Antonio, TX 78205.	Bexar County Public Works Department, 1948 Probandt Street, San Antonio, TX 78214.	*https://msc.fema.gov/portal/advanceSearch.*	Jun. 15, 2020	480035
Collin	City of Plano, (20–06–0804P).	The Honorable Harry LaRosiliere, Mayor, City of Plano, 1520 K Avenue, Suite 300, Plano, TX 75074.	Department of Engineering, 1520 K Avenue, Suite 250, Plano, TX 75074.	*https://msc.fema.gov/portal/advanceSearch.*	Jul. 17, 2020	480140
Denton	City of Denton (19–06–2271P).	The Honorable Chris Watts, Mayor, City of Denton, 215 East McKinney Street, Denton, TX 76201.	Engineering Department, 901–A Texas Street, Denton, TX 76209.	*https://msc.fema.gov/portal/advanceSearch.*	Jul. 17, 2020	480194
Denton	City of Denton (20–06–0789P).	The Honorable Chris Watts, Mayor, City of Denton, 215 East McKinney Street, Denton, TX 76201.	Engineering Department, 901–A Texas Street, Denton, TX 76209.	*https://msc.fema.gov/portal/advanceSearch.*	Jul. 24, 2020	480194
Denton	Unincorporated areas of Denton County, (20–06–0789P).	The Honorable Andy Eads, Denton County Judge, 110 West Hickory Street, 2nd Floor, Denton, TX 76201.	Denton County Public Works, Engineering Department, 1505 East McKinney Street, Suite 175, Denton, TX 76209.	*https://msc.fema.gov/portal/advanceSearch.*	Jul. 24, 2020	480774
El Paso	City of El Paso, (19–06–2053P).	Mr. Tommy Gonzalez, Manager, City of El Paso, 300 North Campbell Street, El Paso, TX 79901.	Development Department, 801 Texas Avenue, El Paso, TX 79901.	*https://msc.fema.gov/portal/advanceSearch.*	Jun. 16, 2020	480214

State and county	Location and case No.	Chief executive officer of community	Community map repository	Online location of letter of map revision	Date of modification	Community No.
El Paso	Unincorporated areas of El Paso County, (19–06–2053P).	The Honorable Ricardo A. Samaniego, El Paso County Judge, 500 East San Antonio Street, Suite 301, El Paso, TX 79901.	El Paso County Public Works Department, 800 East Overland Avenue, Suite 200, El Paso, TX 79901.	*https://msc.fema.gov/portal/advanceSearch.*	Jun. 16, 2020	480212
Kaufman	City of Crandall (19–06–3605P).	The Honorable Danny Kirbie, Mayor, City of Crandall, P.O. Box 277, Crandall, TX 75114.	City Hall, 110 South Main Street, Crandall, TX 75114.	*https://msc.fema.gov/portal/advanceSearch.*	Jul. 10, 2020	480409
Kaufman	Unincorporated areas of Kaufman County, (19–06–3605P).	The Honorable Hal Richards, Kaufman County Judge, 100 West Mulberry Street, Kaufman, TX 75142.	Kaufman County Development Services Department, 106 West Grove Street, Kaufman, TX 75142.	*https://msc.fema.gov/portal/advanceSearch.*	Jul. 10, 2020	480411
Kaufman	Unincorporated areas of Kaufman County, (20–06–0329P).	The Honorable Hal Richards, Kaufman County Judge, 100 West Mulberry Street, Kaufman, TX 75142.	Kaufman County Development Services Department, 106 West Grove Street, Kaufman, TX 75142.	*https://msc.fema.gov/portal/advanceSearch.*	Jul. 6, 2020	480411
Kendall	Unincorporated areas of Kendall County, (19–06–2192P).	The Honorable Darrel L. Lux, Kendall County Judge, 201 East San Antonio Avenue, Suite 122, Boerne, TX 78006.	Kendall County Engineering Department, 201 East San Antonio Avenue, Suite 101, Boerne, TX 78006.	*https://msc.fema.gov/portal/advanceSearch.*	Jun. 24, 2020	480417
Tarrant	City of Hurst, (18–06–4025P).	The Honorable Henry Wilson, Mayor, City of Hurst, 1505 Precinct Line Road, Hurst, TX 76054.	Public Works Department, 1505 Precinct Line Road, Hurst, TX 76054.	*https://msc.fema.gov/portal/advanceSearch.*	Jul. 6, 2020	480601
Tarrant	City of Richland Hills, (18–06–4025P).	The Honorable Edward Lopez, Mayor, City of Richland Hills, 3200 Diana Drive, Richland Hills, TX 76118.	City Hall, 3200 Diana Drive, Richland Hills, TX 76118.	*https://msc.fema.gov/portal/advanceSearch.*	Jul. 6, 2020	480608
Travis	Unincorporated areas of Travis County, (19–06–2941P).	The Honorable Sarah Eckhardt, Travis County Judge, P.O. Box 1748, Austin, TX 78767.	Travis County Transportation and Natural Resources Department, 700 Lavaca Street, 5th Floor, Austin, TX 78701.	*https://msc.fema.gov/portal/advanceSearch.*	Jul. 13, 2020	481026
Utah:						
Washington	City of St. George, (20–08–0005P).	The Honorable Jonathon T. Pike, Mayor, City of St. George, 175 East 200 North, St. George, UT 84770.	City Hall, 175 East 200 North, St. George, UT 84770..	*https://msc.fema.gov/portal/advanceSearch.*	Jul. 1, 2020	490177

[FR Doc. 2020–07052 Filed 4–2–20; 8:45 am]

BILLING CODE 9110–12–P

DEPARTMENT OF HOMELAND SECURITY

Federal Emergency Management Agency

[Docket ID FEMA–2020–0002]

Final Flood Hazard Determinations

AGENCY: Federal Emergency Management Agency, DHS.

ACTION: Notice.

SUMMARY: Flood hazard determinations, which may include additions or modifications of Base Flood Elevations (BFEs), base flood depths, Special Flood Hazard Area (SFHA) boundaries or zone designations, or regulatory floodways on the Flood Insurance Rate Maps (FIRMs) and where applicable, in the supporting Flood Insurance Study (FIS) reports have been made final for the communities listed in the table below.

The FIRM and FIS report are the basis of the floodplain management measures that a community is required either to adopt or to show evidence of having in effect in order to qualify or remain qualified for participation in the Federal Emergency Management Agency's (FEMA's) National Flood Insurance Program (NFIP). In addition, the FIRM and FIS report are used by insurance agents and others to calculate appropriate flood insurance premium rates for buildings and the contents of those buildings.

DATES: The date of August 5, 2020 has been established for the FIRM and, where applicable, the supporting FIS report showing the new or modified flood hazard information for each community.

ADDRESSES: The FIRM, and if applicable, the FIS report containing the final flood hazard information for each community is available for inspection at the respective Community Map Repository address listed in the tables below and will be available online through the FEMA Map Service Center at *https://msc.fema.gov* by the date indicated above.

FOR FURTHER INFORMATION CONTACT: Rick Sacbibit, Chief, Engineering Services Branch, Federal Insurance and Mitigation Administration, FEMA, 400 C Street SW, Washington, DC 20472, (202) 646–7659, or (email) *patrick.sacbibit@fema.dhs.gov;* or visit the FEMA Mapping and Insurance eXchange (FMIX) online at *https://www.floodmaps.fema.gov/fhm/fmx_main.html.*

SUPPLEMENTARY INFORMATION: The Federal Emergency Management Agency (FEMA) makes the final determinations listed below for the new or modified flood hazard information for each community listed. Notification of these changes has been published in

newspapers of local circulation and 90 days have elapsed since that publication. The Deputy Associate Administrator for Insurance and Mitigation has resolved any appeals resulting from this notification.

This final notice is issued in accordance with section 110 of the Flood Disaster Protection Act of 1973, 42 U.S.C. 4104, and 44 CFR part 67. FEMA has developed criteria for floodplain management in floodprone areas in accordance with 44 CFR part 60.

Interested lessees and owners of real property are encouraged to review the new or revised FIRM and FIS report available at the address cited below for each community or online through the FEMA Map Service Center at *https://msc.fema.gov.*

The flood hazard determinations are made final in the watersheds and/or communities listed in the table below.

(Catalog of Federal Domestic Assistance No. 97.022, ''Flood Insurance.'')

Michael M. Grimm,

Assistant Administrator for Risk Management, Department of Homeland Security, Federal Emergency Management Agency.

Community	Community map repository address
Randolph County, Illinois and Incorporated Areas Docket No.: FEMA–B–1908	
Unincorporated Areas of Randolph County	Randolph County Courthouse, 1 Taylor Street, Chester, IL 62233.
Village of Ellis Grove	City Hall, 101 Main Street, Ellis Grove, IL 62241.
Village of Evansville	Evansville Village Hall, 403 Spring Street, Evansville, IL 62242.
Village of Prairie du Rocher	Prairie du Rocher Village Hall, 209 Henry Street, Prairie du Rocher, IL 62277.
Lackawanna County, Pennsylvania (All Jurisdictions) Docket No.: FEMA–B–1250 and FEMA–B–1802	
Borough of Archbald	Municipal Building, 400 Church Street, Archbald, PA 18403.
Borough of Blakely	Blakely Borough Building, 1439 Main Street, Peckville, PA 18452.
Borough of Clarks Green	Borough Building, 104 North Abington Road, Clarks Green, PA 18411.
Borough of Clarks Summit	Municipal Building, 304 South State Street, Clarks Summit, PA 18411.
Borough of Dalton	Municipal Building, 105 West Main Street, Dalton, PA 18414.
Borough of Dickson City	Borough Building, 901 Enterprise Street, Dickson City, PA 18519.
Borough of Dunmore	Municipal Building, 400 South Blakely Street, Dunmore, PA 18512.
Borough of Jermyn	Municipal Building, 440 Jefferson Avenue, Jermyn, PA 18433.
Borough of Jessup	Municipal Building, 395 Lane Street, Jessup, PA 18434.
Borough of Mayfield	Municipal Building, 739 Penn Avenue, Mayfield, PA 18433.
Borough of Moosic	Municipal Building, 715 Main Street, Moosic, PA 18507.
Borough of Moscow	Municipal Building, 123 Van Brunt Street, Moscow, PA 18444.
Borough of Old Forge	Municipal Building, 310 South Main Street, Old Forge, PA 18518.
Borough of Olyphant	Municipal Building, 113 Willow Avenue, Olyphant, PA 18447.
Borough of Taylor	Municipal Building, 122 Union Street, Taylor, PA 18517.
Borough of Throop	Municipal Building, 436 Sanderson Street, Throop, PA 18512.
Borough of Vandling	Borough Building, 449 Hillside Street, Vandling, PA 18421.
City of Carbondale	City Hall, 1 North Main Street, Carbondale, PA 18407.
City of Scranton	Municipal Building, 340 North Washington Avenue, Scranton, PA 18503.
Township of Benton	Benton Township Maintenance Building, 2019 State Route 107, Fleetville, PA 18420.
Township of Carbondale	Carbondale Township Municipal Building, 103 School Street, Childs, PA 18407.
Township of Clifton	Municipal Building, 361 State Route 435, Clifton Township, PA 18424.
Township of Covington	Township Municipal Office, 20 Moffat Drive, Covington Township, PA 18444.
Township of Elmhurst	Municipal Building, 112 Municipal Lane, Elmhurst Township, PA 18444.
Township of Fell	Fell Township Building, 1 Veterans Drive, Simpson, PA 18407.
Township of Glenburn	Glenburn Township Municipal Building, 54 Waterford Road, Dalton, PA 18414.
Township of Greenfield	Township Municipal Building, 424 State Route 106, Greenfield Township, PA 18407.
Township of Jefferson	Township Municipal Building, 487 Cortez Road, Jefferson Township, PA 18436.
Township of La Plume	La Plume Township Municipal Building, 2109 U.S. Route 6 and 11, Factoryville, PA 18419.
Township of Madison	Municipal Building, 3200 Madisonville Road, Madison Township, PA 18444.
Township of Newton	Newton Township Hall, 1528 Newton-Ransom Boulevard, Clarks Summit, PA 18411.
Township of North Abington	Township Hall, 138 Sullivan Road, North Abington Township, PA 18414.
Township of Ransom	Ransom Township Municipal Building, 2435 Hickory Lane, Clarks Summit, PA 18411.
Township of Roaring Brook	Municipal Building, 430 Blue Shutters Road, Roaring Brook Township, PA 18444.
Township of Scott	Joey Terry Civic Center, 1038 Montdale Road, Scott Township, PA 18447.

Community	Community map repository address
Township of South Abington	Municipal Building, 104 Shady Lane Road, South Abington Township, PA 18411.
Township of Spring Brook	Municipal Building, 966 State Route 307, Spring Brook Township, PA 18444.
Township of Thornhurst	Township Building, 356 Old River Road, Thornhurst, PA 18424.
Township of Waverly	Municipal Building, 1 Lake Henry Drive, Waverly, PA 18471.
Township of West Abington	West Abington Township Building, 2545 Bald Mountain Road, Clarks Summit, PA 18411.

[FR Doc. 2020–07054 Filed 4–2–20; 8:45 am]
BILLING CODE 9110–12–P

DEPARTMENT OF HOMELAND SECURITY

Federal Emergency Management Agency

[Docket ID FEMA–2020–0002; Internal Agency Docket No. FEMA–B–2017]

Proposed Flood Hazard Determinations

AGENCY: Federal Emergency Management Agency, DHS.

ACTION: Notice.

SUMMARY: Comments are requested on proposed flood hazard determinations, which may include additions or modifications of any Base Flood Elevation (BFE), base flood depth, Special Flood Hazard Area (SFHA) boundary or zone designation, or regulatory floodway on the Flood Insurance Rate Maps (FIRMs), and where applicable, in the supporting Flood Insurance Study (FIS) reports for the communities listed in the table below. The purpose of this notice is to seek general information and comment regarding the preliminary FIRM, and where applicable, the FIS report that the Federal Emergency Management Agency (FEMA) has provided to the affected communities. The FIRM and FIS report are the basis of the floodplain management measures that the community is required either to adopt or to show evidence of having in effect in order to qualify or remain qualified for participation in the National Flood Insurance Program (NFIP). In addition, the FIRM and FIS report, once effective, will be used by insurance agents and others to calculate appropriate flood insurance premium rates for new buildings and the contents of those buildings.

DATES: Comments are to be submitted on or before July 2, 2020.

ADDRESSES: The Preliminary FIRM, and where applicable, the FIS report for each community are available for inspection at both the online location *https://www.fema.gov/preliminaryfloodhazarddata* and the respective Community Map Repository address listed in the tables below. Additionally, the current effective FIRM and FIS report for each community are accessible online through the FEMA Map Service Center at *https://msc.fema.gov* for comparison.

You may submit comments, identified by Docket No. FEMA–B–2017, to Rick Sacbibit, Chief, Engineering Services Branch, Federal Insurance and Mitigation Administration, FEMA, 400 C Street SW, Washington, DC 20472, (202) 646–7659, or (email) *patrick.sacbibit@fema.dhs.gov.*

FOR FURTHER INFORMATION CONTACT: Rick Sacbibit, Chief, Engineering Services Branch, Federal Insurance and Mitigation Administration, FEMA, 400 C Street SW, Washington, DC 20472, (202) 646–7659, or (email) *patrick.sacbibit@fema.dhs.gov;* or visit the FEMA Mapping and Insurance eXchange (FMIX) online at *https://www.floodmaps.fema.gov/fhm/fmx_main.html.*

SUPPLEMENTARY INFORMATION: FEMA proposes to make flood hazard determinations for each community listed below, in accordance with section 110 of the Flood Disaster Protection Act of 1973, 42 U.S.C. 4104, and 44 CFR 67.4(a).

These proposed flood hazard determinations, together with the floodplain management criteria required by 44 CFR 60.3, are the minimum that are required. They should not be construed to mean that the community must change any existing ordinances that are more stringent in their floodplain management requirements. The community may at any time enact stricter requirements of its own or pursuant to policies established by other Federal, State, or regional entities. These flood hazard determinations are used to meet the floodplain management requirements of the NFIP and are used to calculate the appropriate flood insurance premium rates for new buildings built after the FIRM and FIS report become effective.

The communities affected by the flood hazard determinations are provided in the tables below. Any request for reconsideration of the revised flood hazard information shown on the Preliminary FIRM and FIS report that satisfies the data requirements outlined in 44 CFR 67.6(b) is considered an appeal. Comments unrelated to the flood hazard determinations also will be considered before the FIRM and FIS report become effective.

Use of a Scientific Resolution Panel (SRP) is available to communities in support of the appeal resolution process. SRPs are independent panels of experts in hydrology, hydraulics, and other pertinent sciences established to review conflicting scientific and technical data and provide recommendations for resolution. Use of the SRP only may be exercised after FEMA and local communities have been engaged in a collaborative consultation process for at least 60 days without a mutually acceptable resolution of an appeal. Additional information regarding the SRP process can be found online at *https://www.floodsrp.org/pdfs/srp_overview.pdf.*

The watersheds and/or communities affected are listed in the tables below. The Preliminary FIRM, and where applicable, FIS report for each community are available for inspection at both the online location *https://www.fema.gov/preliminaryfloodhazarddata* and the respective Community Map Repository address listed in the tables. For communities with multiple ongoing Preliminary studies, the studies can be identified by the unique project number and Preliminary FIRM date listed in the tables. Additionally, the current effective FIRM and FIS report for each community are accessible online through the FEMA Map Service Center at *https://msc.fema.gov* for comparison.

(Catalog of Federal Domestic Assistance No. 97.022, ''Flood Insurance.'')

Michael M. Grimm,

Assistant Administrator for Risk Management, Department of Homeland Security, Federal Emergency Management Agency.

Community	Community map repository address
Horry County, South Carolina and Incorporated Areas Project: MICS 18448 Preliminary Date: August 19, 2019	
City of Conway	Building Department, 206 Laurel Street, Conway, SC 29526.
City of Myrtle Beach	City Services Building, 921 North Oak Street, Myrtle Beach, SC 29577.
City of North Myrtle Beach	Planning and Development Department, 1018 2nd Avenue South, North Myrtle Beach, SC 29582.
Unincorporated Areas of Horry County	Horry County Code Enforcement Office, 1301 2nd Avenue, Suite 1D09, Conway, SC 29526.
Hays County, Texas and Incorporated Areas Project: 16–06–1113S Preliminary Date: October 29, 2019	
City of Buda	City Engineer's Office, 405 East Loop Street, Building 100, Buda, TX 78610.
City of Dripping Springs	Public Works Department, 511 Mercer Street, Dripping Springs, TX 78620.
City of Hays	Hays City Hall, 520 Country Lane, Buda, TX 78610.
City of Kyle	Building Department, 100 West Center Street, Kyle, TX 78640.
City of Mountain City	City Hall, 101 Mountain City Drive, Mountain City, TX 78610.
City of San Marcos	Engineering Department, Municipal Building, 630 East Hopkins Street, San Marcos, TX 78666.
City of Wimberley	Planning and Development Department, 221 Stillwater Road, Wimberley, TX 78676.
Unincorporated Areas of Hays County	Hays County Development Services Department, 2171 Yarrington Road, Suite 100, Kyle, TX 78640.
Davis County, Utah and Incorporated Areas Project: 10–08–1054S Preliminary Date: September 30, 2019	
City of Bountiful	City Hall, 150 North Main Street, Suite 101, Bountiful, UT 84010.
City of Centerville	Community Development Department, 655 North 1250 West, Centerville, UT 84014.
City of Farmington	City Hall, 160 South Main Street, Farmington, UT 84025.
City of Fruit Heights City	City Hall, 910 South Mountain Road, Fruit Heights City, UT 84037.
City of Kaysville	City Hall, 23 East Center Street, Kaysville, UT 84037.
City of Layton	City Hall, 437 North Wasatch Drive, Layton, UT 84041.
City of West Bountiful	City Hall, 550 North 800 West, West Bountiful, UT 84087.
City of Woods Cross	City Hall, 1555 South 800 West, Woods Cross, UT 84087.
Unincorporated Areas of Davis County	Davis County Administration Building, 61 South Main Street, Farmington, UT 84025.
Essex County, Virginia and Incorporated Areas Project: 19–03–0006S Preliminary Date: September 15, 2019	
Unincorporated Areas of Essex County	Essex County Building and Zoning Department, 202 South Church Lane, Tappahannock, VA 22560.
Middlesex County, Virginia and Incorporated Areas Project: 19–03–0011S Preliminary Date: September 16, 2019	
Unincorporated Areas of Middlesex County	Middlesex County Building Department, 877 General Puller Highway, Saluda, VA 23149.

[FR Doc. 2020–07053 Filed 4–2–20; 8:45 am]

BILLING CODE 9110–12–P

DEPARTMENT OF HOMELAND SECURITY

Federal Emergency Management Agency

[Docket ID FEMA–2014–0022]

Technical Mapping Advisory Council

AGENCY: Federal Emergency Management Agency, DHS.

ACTION: Committee management; request for applicants for appointment to the Federal Emergency Management Agency's Technical Mapping Advisory Council.

SUMMARY: The Federal Emergency Management Agency (FEMA) is requesting qualified individuals interested in serving on the Technical Mapping Advisory Council (TMAC) to apply for appointment. As provided for in the Biggert-Waters Flood Insurance Reform Act of 2012, the TMAC makes recommendations to the FEMA Administrator on how to improve, in a cost-effective manner, the accuracy, general quality, ease of use, and distribution and dissemination of flood insurance rate maps (FIRMs) and risk data; and performance metrics and milestones required to effectively and efficiently map flood risk areas in the United States. Applicants will be considered for appointment for the five vacancies on the TMAC.

DATES: Applications will be accepted until 11:59 p.m. EST on May 31, 2020.

ADDRESSES: Applications for membership should be submitted by one of the following methods:

- *Email: FEMA-TMAC@fema.dhs.gov.*
- *Mail:* FEMA, Federal Insurance and Mitigation Administration, Risk Management Directorate, Attn: Michael

Nakagaki, 400 C Street SW, Suite 6NW–1412, Washington, DC 20472–3020.

FOR FURTHER INFORMATION CONTACT: Michael Nakagaki (Designated Federal Officer for the TMAC); FEMA, Federal Insurance and Mitigation Administration, Risk Management Directorate, 400 C Street SW, Suite 6NW–1412, Washington, DC 20472–3020; telephone: (202) 212–2148; and email: *FEMA-TMAC@fema.dhs.gov.* The TMAC website is: *http://www.fema.gov/TMAC.*

SUPPLEMENTARY INFORMATION: The TMAC is an advisory committee that was established by the Biggert-Waters Flood Insurance Reform Act of 2012, 42 U.S.C. 4101a, and in accordance with provisions of the Federal Advisory Committee Act (FACA), 5 U.S.C. App. (Pub. L. 92–463). The TMAC is required to make recommendations to FEMA on mapping-related issues and activities. This includes mapping standards and guidelines, performance metrics and milestones, map maintenance, interagency and intergovernmental coordination, map accuracy, funding strategies, and other mapping-related issues and activities. In addition, the TMAC is required to submit an annual report to the FEMA Administrator that contains: (1) A description of the activities of the Council; (2) an evaluation of the status and performance of Flood Insurance Rate Maps and mapping activities to revise and update Flood Insurance Rate Maps; and (3) a summary of recommendations made by the Council to the FEMA Administrator.

Members of the TMAC will be appointed based on their demonstrated knowledge and competence regarding surveying, cartography, remote sensing, geographic information systems, or the technical aspects of preparing and using FIRMs. To the maximum extent practicable, FEMA will ensure that membership of the TMAC has a balance of Federal, State, local, Tribal, and private members, and includes geographic diversity.

FEMA is requesting qualified individuals who are interested in serving on the TMAC to apply for appointment. Applicants will be considered for appointment for five vacancies on the TMAC, the terms of which start on March 30, 2021. Certain members of the TMAC, as described below, will be appointed to serve as Special Government Employees (SGE) as defined in section 202(a) of title 18 United States Code. Candidates selected for appointment as SGEs are required to complete a Confidential Financial Disclosure Form (Office of Government Ethics (OGE) Form 450). This form can be obtained by visiting the website of the Office of Government Ethics (*http://www.oge.gov*). Please do not submit this form with your application. Qualified applicants will be considered for one or more of the following membership categories with vacancies:

(a) One member of a recognized professional mapping association or organization;

(b) A representative of State national flood insurance coordination offices;

(c) A representative of a local government agency that has entered into cooperating technical partnerships with the Administrator and demonstrated the capability to produce flood insurance maps;

(d) One member of a recognized floodplain management association or organization;

(e) One State mitigation officer.

Members of the TMAC serve terms of office for three years. There is no application form. However, applications must include the following information:

- The applicant's full name,
- home and business phone numbers,
- preferred email address,
- home and business mailing addresses,
- current position title and organization,
- resume or curriculum vitae,
- and the membership category of interest (*e.g.,* member of a recognized professional association or organization representing flood hazard determination firms).

The TMAC shall meet as often as needed to fulfill its mission, but not less than twice a year. Members may be reimbursed for travel and per diem incurred in the performance of their duties as members of the TMAC. All travel for TMAC business must be approved in advance by the Designated Federal Officer.

The Department of Homeland Security (DHS) does not discriminate in employment on the basis of race, color, religion, sex, national origin, political affiliation, sexual orientation, gender identity, marital status, disability and genetic information, age, membership in an employee organization, or other non-merit factor. DHS strives to achieve a widely diverse candidate pool for all its recruitment actions. Current DHS and FEMA employees will not be considered for membership. Federally registered lobbyists will not be considered for SGE appointments.

Michael M. Grimm,

Assistant Administrator for Risk Management, Department of Homeland Security, Federal Emergency Management Agency.

[FR Doc. 2020–07049 Filed 4–2–20; 8:45 am]

BILLING CODE 9110–12–P

DEPARTMENT OF HOMELAND SECURITY

Federal Emergency Management Agency

[Docket ID FEMA–2020–0002]

Changes in Flood Hazard Determinations

AGENCY: Federal Emergency Management Agency, DHS.

ACTION: Notice.

SUMMARY: New or modified Base (1-percent annual chance) Flood Elevations (BFEs), base flood depths, Special Flood Hazard Area (SFHA) boundaries or zone designations, and/or regulatory floodways (hereinafter referred to as flood hazard determinations) as shown on the indicated Letter of Map Revision (LOMR) for each of the communities listed in the table below are finalized. Each LOMR revises the Flood Insurance Rate Maps (FIRMs), and in some cases the Flood Insurance Study (FIS) reports, currently in effect for the listed communities. The flood hazard determinations modified by each LOMR will be used to calculate flood insurance premium rates for new buildings and their contents.

DATES: Each LOMR was finalized as in the table below.

ADDRESSES: Each LOMR is available for inspection at both the respective Community Map Repository address listed in the table below and online through the FEMA Map Service Center at *https://msc.fema.gov.*

FOR FURTHER INFORMATION CONTACT: Rick Sacbibit, Chief, Engineering Services Branch, Federal Insurance and Mitigation Administration, FEMA, 400 C Street SW, Washington, DC 20472, (202) 646–7659, or (email) *patrick.sacbibit@fema.dhs.gov;* or visit the FEMA Mapping and Insurance eXchange (FMIX) online at *https://www.floodmaps.fema.gov/fhm/fmx_main.html.*

SUPPLEMENTARY INFORMATION: The Federal Emergency Management Agency (FEMA) makes the final flood hazard determinations as shown in the LOMRs

for each community listed in the table below. Notice of these modified flood hazard determinations has been published in newspapers of local circulation and 90 days have elapsed since that publication. The Deputy Associate Administrator for Insurance and Mitigation has resolved any appeals resulting from this notification.

The modified flood hazard determinations are made pursuant to section 206 of the Flood Disaster Protection Act of 1973, 42 U.S.C. 4105, and are in accordance with the National Flood Insurance Act of 1968, 42 U.S.C. 4001 *et seq.,* and with 44 CFR part 65.

For rating purposes, the currently effective community number is shown and must be used for all new policies and renewals.

The new or modified flood hazard information is the basis for the floodplain management measures that the community is required either to adopt or to show evidence of being already in effect in order to remain qualified for participation in the National Flood Insurance Program (NFIP).

This new or modified flood hazard information, together with the floodplain management criteria required by 44 CFR 60.3, are the minimum that are required. They should not be construed to mean that the community must change any existing ordinances that are more stringent in their floodplain management requirements. The community may at any time enact stricter requirements of its own or pursuant to policies established by other Federal, State, or regional entities.

This new or modified flood hazard determinations are used to meet the floodplain management requirements of the NFIP and are used to calculate the appropriate flood insurance premium rates for new buildings, and for the contents in those buildings. The changes in flood hazard determinations are in accordance with 44 CFR 65.4.

Interested lessees and owners of real property are encouraged to review the final flood hazard information available at the address cited below for each community or online through the FEMA Map Service Center at *https://msc.fema.gov.*

(Catalog of Federal Domestic Assistance No. 97.022, ''Flood Insurance.'')

Michael M. Grimm,

Assistant Administrator for Risk Management, Department of Homeland Security, Federal Emergency Management Agency.

State and county	Location and case No.	Chief executive officer of community	Community map repository	Date of modification	Community No.
Colorado:					
Boulder (FEMA Docket No.: B–1981).	City of Longmont (19–08–0300P).	The Honorable Brian Bagley, Mayor, City of Longmont, 350 Kimbark Street, Longmont, CO 80501.	Public Works and Natural Resources Department, 385 Kimbark Street, Longmont, CO 80501.	Mar. 11, 2020	080027
Boulder (FEMA Docket No.: B–1981).	Unincorporated areas of Boulder County (19–08–0300P).	The Honorable Elise Jones, Chair, Boulder County Board of Commissioners, P.O. Box 471, Boulder, CO 80306.	Boulder County Transportation Department, 2525 13th Street, Suite 203, Boulder, CO 80304.	Mar. 11, 2020	080023
Las Animas (FEMA Docket No.: B–1981).	Unincorporated areas of Las Animas County (19–08–0389P).	The Honorable Felix M. Lopez, District 1 Commissioner, Las Animas County, 200 East 1st Street, Trinidad, CO 81082.	Las Animas County Courthouse, 200 East 1st Street, Room 106, Trinidad, CO 81082.	Mar. 12, 2020	080105
Connecticut: Tolland (FEMA Docket No.: B–1981).	Town of Somers (19–01–0920P).	The Honorable C.G. Knorr, Jr., First Selectman, Town of Somers Board of Selectmen, 600 Main Street, Somers, CT 06071.	Town Hall, 600 Main Street, Somers, CT 06071.	Mar. 18, 2020	090112
Florida:					
Collier (FEMA Docket No.: B–2006).	City of Marco Island (19–04–5064P).	Mr. Michael T. McNees, City of Marco Island, Manager, 50 Bald Eagle Drive, Marco Island, FL 34145.	Building Services Department, 50 Bald Eagle Drive, Marco Island, FL 34145.	Mar. 13, 2020	120426
Monroe (FEMA Docket No.: B–1981).	Village of Islamorada (19–04–5432P).	The Honorable Deb Gillis, Mayor, Village of Islamorada, 86800 Overseas Highway, Islamorada, FL 33036.	Building Department, 86800 Overseas Highway, Islamorada, FL 33036.	Mar. 4, 2020	120424
Orange (FEMA Docket No.: B–1981).	City of Orlando (19–04–2940P).	The Honorable Buddy Dyer, Mayor, City of Orlando, 400 South Orange Avenue, Orlando, FL 32801.	Public Works Department, Engineering Division, 400 South Orange Avenue, Orlando, FL 32801.	Mar. 11, 2020	120186
Orange (FEMA Docket No.: B–1981).	City of Orlando (19–04–3467P).	The Honorable Buddy Dyer, Mayor, City of Orlando, 400 South Orange Avenue, Orlando, FL 32801.	Public Works Department, Engineering Division, 400 South Orange Avenue, Orlando, FL 32801.	Mar. 4, 2020	120186
Orange (FEMA Docket No.: B–1981).	Unincorporated areas of Orange County (19–04–2940P).	The Honorable Jerry L. Demings, Mayor, Orange County, 201 South Rosalind Avenue, 5th Floor Orlando, FL 32801.	Orange County Stormwater Management Department, 4200 South John Young Parkway Orlando, FL 32839.	Mar. 11, 2020	120179
Orange (FEMA Docket No.: B–1981).	Unincorporated areas of Orange County (19–04–3467P).	The Honorable Jerry L. Demings, Mayor, Orange County, 201 South Rosalind Avenue, 5th Floor Orlando, FL 32801.	Orange County Stormwater Management Department, 4200 South John Young Parkway, Orlando, FL 32839.	Mar. 4, 2020	120179
Sarasota (FEMA Docket No.: B–1981).	City of Sarasota (19–04–5431P).	The Honorable Liz Alpert, Mayor, City of Sarasota, 1565 1st Street, Room 101, Sarasota, FL 34236.	Development Services Department, 1565 1st Street, Sarasota, FL 34236.	Mar. 13, 2020	125150
New York: Montgomery (FEMA Docket No.: B–1974).	City of Amsterdam (19–02–1207P).	The Honorable Michael J. Villa, Mayor, City of Amsterdam, 61 Church Street, Amsterdam, NY 12010.	City Hall, 61 Church Street, Amsterdam, NY 12010.	Mar. 20, 2020	360440
North Carolina: Cumberland (FEMA Docket No.: B–2006).	City of Fayetteville (19–04–2019P).	The Honorable Mitch Colvin, Mayor, City of Fayetteville, 433 Hay Street, Fayetteville, NC 28301.	Planning and Zoning Division, 433 Hay Street, Fayetteville, NC 28301.	Feb. 25, 2020	370077
Oklahoma:					
Creek (FEMA Docket No.: B–2006).	City of Sapulpa (19–06–0851P).	The Honorable Reg Green, Mayor, City of Sapulpa, 425 East Dewey Avenue, Sapulpa, OK 74067.	GIS Mapping Department, 425 East Dewey Avenue, Sapulpa, OK 74067.	Mar. 16, 2020	400053

State and county	Location and case No.	Chief executive officer of community	Community map repository	Date of modification	Community No.
Creek (FEMA Docket No.: B–2006).	Unincorporated areas of Creek County (19–06–0851P).	The Honorable Leon Warner, Chairman, Creek County Commission, 10920 South Highway 99, Drumright, OK 74030.	Creek County Planning Department, 317 East Lee Avenue, Suite 101, Sapulpa, OK 74066.	Mar. 16, 2020	400490
Tulsa (FEMA Docket No.: B–1981).	City of Bixby (19–06–2128P).	The Honorable Brian Guthrie, Mayor, City of Bixby, P.O. Box 70, Bixby, OK 74008.	Development Services Department, 113 West Dawes, Bixby, OK 74008.	Mar. 12, 2020	400207
South Carolina: Horry (FEMA Docket No.: B–1981).	City of Myrtle Beach (19–04–5527P).	Mr. John Pedersen, City of Myrtle Beach, Manager, 937 Broadway Street, Myrtle Beach, SC 29577.	City Services Department, 921 North Oak Street, Myrtle Beach, SC 29577.	Mar. 13, 2020	450109
Texas:					
Bexar (FEMA Docket No.: B–2006).	City of San Antonio (18–06–2883P).	The Honorable Ron Nirenberg, Mayor, City of San Antonio, P.O. Box 839966, San Antonio, TX 78283.	Transportation and Capital Improvements Department, Storm Water Division, 1901 South Alamo Street, 2nd Floor, San Antonio, TX 78204.	Mar. 9, 2020	480045
Collin (FEMA Docket No.: B–2006).	City of Allen (19–06–0352P).	The Honorable Stephen Terrell, Mayor, City of Allen, 305 Century Parkway, 1st Floor, Allen, TX 75013.	City Hall, 305 Century Parkway, Allen, TX 75013.	Mar. 13, 2020	480131
Collin (FEMA Docket No.: B–2006).	City of Celina (19–06–2646P).	The Honorable Sean Terry, Mayor, City of Celina, 142 North Ohio Street, Celina, TX 75009.	City Hall, 142 North Ohio Street, Celina, TX 75009.	Mar. 16, 2020	480133
Dallas (FEMA Docket No.: B–2006).	City of Dallas (19–06–2679P).	The Honorable Eric Johnson, Mayor, City of Dallas, 1500 Marilla Street, Suite 5EN, Dallas, TX 75201.	Floodplain Management Department, 320 East Jefferson Boulevard, Room 307, Dallas, TX 75203.	Mar. 16, 2020	480171
Dallas (FEMA Docket No.: B–1981).	City of Grand Prairie (19–06–2040P).	The Honorable Ron Jensen, Mayor, City of Grand Prairie, P.O. Box 534045, Grand Prairie, TX 75053.	Development Department, 206 West Church Street, Grand Prairie, TX 75050.	Mar. 6, 2020	485472
Denton and Tarrant (FEMA Docket No.: B–2006).	City of Fort Worth (19–06–2492P).	The Honorable Betsy Price, Mayor, City of Fort Worth, 200 Texas Street, Fort Worth, TX 76102.	Transportation and Public Works Department, 200 Texas Street, Fort Worth, TX 76102.	Mar. 16, 2020	480596
Tarrant (FEMA Docket No.: B–2006).	City of Fort Worth (19–06–3526X).	The Honorable Betsy Price, Mayor, City of Fort Worth, 200 Texas Street, Fort Worth, TX 76102.	Transportation and Public Works Department, 200 Texas Street, Fort Worth, TX 76102.	Mar. 16, 2020	480596
Virginia:					
Albemarle (FEMA Docket No.: B–1981).	Unincorporated areas of Albemarle County (19–03–1243P).	Mr. Jeff Richardson, Albemarle County Executive, 401 McIntire Road, Charlottesville, VA 22902.	Albemarle County Community Development Department, 401 McIntire Road, Charlottesville, VA 22902.	Mar. 19, 2020	510006
Independent City (FEMA Docket No.: B–1981).	City of Charlottesville (19–03–1243P).	Mr. Tarron J. Richardson, City of Charlottesville Manager, P.O. Box 911, Charlottesville, VA 22902.	Neighborhood Development Services Department, 610 East Market Street, Charlottesville, VA 22902.	Mar. 19, 2020	510033

[FR Doc. 2020–07051 Filed 4–2–20; 8:45 am]

BILLING CODE 9110–12–P

DEPARTMENT OF HOMELAND SECURITY

[Docket No. CISA–2020–0004]

Notice of the President's National Infrastructure Advisory Council Meeting

AGENCY: Cybersecurity and Infrastructure Security Agency (CISA), Department of Homeland Security (DHS).

ACTION: Announcement of meeting; request for comments.

SUMMARY: CISA announces a public meeting of the President's National Infrastructure Advisory Council (NIAC). To facilitate public participation, CISA invites public comments on the agenda items and any associated briefing materials to be considered by the council at its next meeting.

DATES:

Written Comments: Written comments in response to the meeting minutes and briefing materials will be accepted through 5:00 p.m. EST on April 20, 2020.

NIAC Meeting: The meeting was held on Friday, March 13, 2020 from 4:00 p.m.–5:00 p.m. ET.

ADDRESSES: The meeting was held via conference call on March 13, 2020.

Comments: Written comments may be submitted on the issues considered by the NIAC as described in the **SUPPLEMENTARY INFORMATION** section below and any briefing materials for the meeting. The minutes for this meeting will be made publicly available on at the following website: *https://www.dhs.gov/national-infrastructure-advisory-council.*

Comments identified by docket number '' *CISA–2020–0004*'' may be submitted by any of the following methods:

- Federal eRulemaking Portal: *www.regulations.gov.* Follow the instructions for submitting written comments.
- *Email: NIAC@hq.dhs.gov.* Include docket number *CISA–2019–0017* in the subject line of the message.
- *Fax:* 703–235–9707, ATTN: Ginger K. Norris.
- *Mail:* Ginger K. Norris, Designated Federal Officer, National Infrastructure Advisory Council, Cybersecurity and Infrastructure Security Agency, Department of Homeland Security, 245 Murray Lane, Mail Stop 0612, Arlington, VA 20598–0612.

Instructions: All submissions received must include the agency name and docket number for this notice. All written comments received will be posted without alteration at *www.regulations.gov,* including any personal information provided. For detailed instructions on sending comments and additional information on participating in the upcoming NIAC meeting, see the ''Public Participation'' heading of the **SUPPLEMENTARY INFORMATION** section of this document.

Docket: For access to the docket and comments received by the NIAC, go to *www.regulations.gov.*

FOR FURTHER INFORMATION CONTACT: Ginger K. Norris, 202–441–5885, *ginger.norris@cisa.dhs.gov.*

SUPPLEMENTARY INFORMATION: The NIAC is established under Section 10 of E.O. 13231 issued on October 16, 2001. Notice of this meeting is given under the

Federal Advisory Committee Act (FACA), 5 U.S.C. Appendix (Pub. L. 92–463). The NIAC shall provide the President, through the Secretary of Homeland Security, with advice on the security and resilience of the Nation's critical infrastructure sectors.

The NIAC met under an Exceptional Circumstance on March 13, 2020, to discuss the COVID–19 Pandemic and the ways in which the NIAC might be able to assist CISA with its ongoing response efforts. The following agenda was used for the NIAC discussion with CISA leadership.

Agenda

I. Call to Order
II. Opening Remarks
III. Discussion on COVID–19
IV. Closing Remarks
V. Adjournment

Public Participation

Meeting Registration Information

Any member of the public who wishes to provide written comment can do so by emailing *NIAC@hq.dhs.gov* no later than Friday, April 20, 2020, at 5:00 p.m. EST.

Information on Services for Individuals With Disabilities

For information on facilities or services for individuals with disabilities or to request special assistance at the meeting, contact *NIAC@hq.dhs.gov* as soon as possible.

Ginger K. Norris,

Designated Federal Official National Infrastructure Advisory Council, Cybersecurity and Infrastructure Security Agency, Department of Homeland Security.

[FR Doc. 2020–06933 Filed 4–2–20; 8:45 am]

BILLING CODE 9110–9P–P

DEPARTMENT OF THE INTERIOR

Fish and Wildlife Service

[Docket No. FWS–R8–ES–2018–0116; FF08ESMF00–FXES11140800000–189]

Block 12 Development Project, Kern County, California; Draft Environmental Assessment and Draft Habitat Conservation Plan; Reopening of Public Comment Period

AGENCY: Fish and Wildlife Service, Interior.

ACTION: Notice of availability; reopening of public comment period.

SUMMARY: The U.S. Fish and Wildlife Service (Service) is reopening the public comment period for the draft environmental assessment (draft EA) and draft habitat conservation plan (HCP) in support of an incidental take permit (ITP) application received from Aera Energy, LLC.

DATES: The comment period for the draft EA and draft HCP addressing the ITP application for incidental take, which opened via a notice that published on March 2, 2020 (85 FR 12322), is reopened. We will accept comments received or postmarked on or before April 17, 2020. Comments submitted electronically using *http://www.regulations.gov* (see **ADDRESSES**) must be received by 11:59 p.m. Eastern Time on the closing date.

ADDRESSES: *Obtaining Documents:* The draft EA, draft HCP, and any comments and other materials that we receive are available for public inspection at *http://www.regulations.gov* in Docket No. FWS–HQ–IA–2018–0116.

Submitting Comments: To submit comments, please use one of the following methods, and note that your information requests or comments are in reference to the draft EA, draft HCP, or both. If you have previously submitted comments, please do not resubmit them, we have already incorporated them in the public record and will fully consider them in our final decision.

- *Internet:* Submit comments at *http://www.regulations.gov* under Docket No. FWS–R8–ES–2018–0116.
- *U.S. Mail or Hand-Delivery:* Public Comments Processing, Attn: Docket No. FWS–R8–ES–2018–0116; U.S. Fish and Wildlife Service Headquarters, MS: PRB/3W; 5275 Leesburg Pike; Falls Church, VA 22041–3803.

For more information, see Public Comments under **SUPPLEMENTARY INFORMATION**.

FOR FURTHER INFORMATION CONTACT: Justin Sloan, Senior Wildlife Biologist, or Patricia Cole, Chief, San Joaquin Valley Division, Sacramento Fish and Wildlife Office, by email at *justin_sloan@fws.gov* or *patricia_cole@fws.gov,* by phone at 916–414–6600 or via the Federal Relay Service at 800–877–8339.

SUPPLEMENTARY INFORMATION: The U.S. Fish and Wildlife Service (Service) received an incidental take permit (ITP) application from Aera Energy, LLC in accordance with the requirements of the Endangered Species Act, as amended (ESA; 16 U.S.C. 1531 *et seq.*). For more information, see the March 2, 2020 (85 FR 12322), notice. We are reopening the public comment period on the draft EA and draft HCP documents (see **DATES** and **ADDRESSES**).

Authority

We issue this notice pursuant to section 10(c) of the ESA (16 U.S.C. 1531 *et seq.*) and its implementing regulations (50 CFR 17.22 and 17.32), and the National Environmental Policy Act (42 U.S.C. 4321 *et seq.*) and its implementing regulations (40 CFR 1506.6 and 43 CFR 46.305).

Jennifer Norris,

Field Supervisor, Sacramento Fish and Wildlife Office, Sacramento, California.

[FR Doc. 2020–06961 Filed 4–2–20; 8:45 am]

BILLING CODE 4333–15–P

DEPARTMENT OF THE INTERIOR

Fish and Wildlife Service

[FWS–R1–ES–2019–N084; FXES11140100000–190–FF01E00000]

Record of Decision for the Final Environmental Impact Statement for the Skookumchuck Wind Energy Project Habitat Conservation Plan, Lewis and Thurston Counties, Washington

AGENCY: Fish and Wildlife Service, Interior.

ACTION: Notice of availability; record of decision.

SUMMARY: We, the U.S. Fish and Wildlife Service (Service), announce the availability of a record of decision (ROD) for the proposed issuance of an Endangered Species Act (ESA) permit for the Skookumchuck Wind Energy Project (project) and final habitat conservation plan (HCP). The ROD documents the Service's decision to issue an incidental take permit (ITP) to Skookumchuck Wind Energy Project, LLC (applicant). As summarized in the ROD, the Service has selected Alternative 1—the Proposed Action, which includes implementation of the HCP and issuance of the ITP authorizing incidental take of one threatened species listed under the ESA and two species protected under the Bald and Golden Eagle Protection Act (BGEPA) that may occur as a result of operation of the project over a 30-year period.

ADDRESSES: You may obtain copies of the ROD and other documents associated with the decision by the following methods.

- *Internet:* Documents may be viewed and downloaded on the internet at *http://www.fws.gov/wafwo/.*
- *U.S. Mail:* You may obtain a CD–ROM with electronic copies of these documents if you make a request within 30 days after the date of publication of this notice by writing to Curtis Tanner, U.S. Fish and Wildlife Service, Washington Fish and Wildlife Office, 510 Desmond Dr. SE, Suite 102, Lacey, WA 98503.

• *Telephone:* Call 360–753–4326 during regular business hours.

FOR FURTHER INFORMATION CONTACT: Curtis Tanner, by mail at U.S. Fish and Wildlife Service, Washington Fish and Wildlife Office (see **ADDRESSES**); by phone at 360–753–4326; or via email at *Curtis_Tanner@fws.gov.* Hearing or speech impaired individuals may call the Federal Relay Service at 800–877–8339 for TTY assistance.

SUPPLEMENTARY INFORMATION: We, the U.S. Fish and Wildlife Service (Service), announce the availability of a record of decision (ROD) for the proposed issuance of an Endangered Species Act (ESA) section 10(a)(1)(B) incidental take permit (ITP) to Skookumchuck Wind Energy Project, LLC (applicant) for the Skookumchuck Wind Energy Project (project) and final habitat conservation plan (HCP). The ROD documents the Service's decision to issue an ITP to the applicant. As summarized in the ROD, the Service has selected Alternative 1–the Proposed Action (described below), which includes implementation of the HCP and issuance of the ITP authorizing incidental take of the following covered species that may occur as a result of project operations during a 30-year period—the marbled murrelet (*Brachyramphus marmoratus*), which is a threatened species listed under the ESA, and the bald eagle (*Haliaeetus leucocephalus*) and the golden eagle (*Aquila chrysaetos*), which are not listed under the ESA but are protected under the Bald and Golden Eagle Protection Act (BGEPA).

We are advising the public of the availability of the ROD, developed in compliance with the agency decision-making requirements of the National Environmental Policy Act of 1969, as amended (NEPA), as well as the final HCP as submitted by the applicant. All alternatives have been described in detail, evaluated, and analyzed in our draft environmental impact statement (DEIS) and final environmental impact statement (FEIS). Our notice of availability of the FEIS and HCP was published in the **Federal Register** on May 31, 2019 (84 FR 25299), with a minor correction published in the **Federal Register** on June 6, 2019 (84 FR 26423).

Background

The project site encompasses approximately 9,700 acres of forestlands in Thurston and Lewis Counties, Washington. The applicant intends to initiate turbine operations in 2019, or as soon as possible thereafter. A detailed description of the project is presented in chapter 2 of the HCP. The majority of the project, including all 38 wind turbines, is located in Lewis County, Washington. Some supporting infrastructure is located in Thurston County, Washington. The wind energy generation facility is located on a prominent ridgeline on the Weyerhaeuser Company's Vail Tree Farm, located approximately 18 miles east of Centralia, Washington. The project is expected to produce an output of approximately 137 megawatts (MW) of electricity from 38 wind turbines, each of which is 492 feet tall (from ground to vertical blade tip), with rotor diameters of 446 feet. The turbine operating prescriptions presented in chapter 2 of the HCP include curtailment regimes and site management prescriptions.

Pre-project monitoring identified the presence of each covered species in the project area. The applicant determined that adverse effects to each of the covered species are unavoidable, and developed the HCP to cover take of those species caused by project operations over a period of 30 years. The HCP details measures the applicant will implement to minimize, mitigate, and monitor the unavoidable incidental take of the covered species.

Avoidance and minimization measures in the HCP to benefit the marbled murrelet include seasonal curtailment of turbine blades (turbine blades are fully stopped and feathered into the wind) and site management prescriptions to maintain transmission and distribution line flight diverters, shield artificial light sources, and minimize the artificial increase of potential nest predators in the project area. Mitigation measures in the HCP to benefit the marbled murrelet include acquisition and permanent management of conservation lands to promote the preservation and enhancement of suitable nesting habitat for the species, and funding the removal of abandoned or derelict fishing nets in the Salish Sea in which murrelets can become entangled and drown.

Avoidance and minimization measures in the HCP to benefit the bald eagle and the golden eagle include site management prescriptions to remove carrion to reduce scavenging by eagles on the project site, minimize cover for prey animals such as rabbits to reduce prey-based attractions of eagles to the project site, and testing of eagle detection-based turbine curtailment technologies intended to reduce eagle collisions with operating turbine blades. If effective, the turbine curtailment triggered by automated eagle-detection will be implemented routinely. Mitigation measures in the HCP intended to benefit bald eagles and golden eagles consist of retrofitting power poles to reduce the occurrence of eagle collisions with power lines and electrocution. Eagles will also receive marginal benefit from the conservation lands in the form of nesting, roosting, and foraging habitat.

Purpose and Need

The Service's purpose and need is to respond to the ITP application submitted by the applicant, and to approve, approve with conditions, or deny the ITP application. This assessment is complete, and was be made pursuant to the requirements of ESA section 10(a)(1)(B) and the BGEPA, and their respective implementing regulations. Any ITP issued by the Service must meet all applicable requirements of the ESA, BGEPA, and their implementing regulations.

Alternatives

Our FEIS analyzed the environmental impacts of no action, and the following three action alternatives related to the issuance of the ITP and implementation of the HCP: (A) The Proposed Action (Alternative 1); (B) a modified site design for the Proposed Action (Alternative 2); and (C) an enhanced curtailment regime for the Proposed Action (Alternative 3).

No-Action Alternative: Under the No-Action Alternative (Options A and B), no permit would be issued, and the applicant's HCP would not be implemented. This alternative consists of two options: Option A—No Project Operations and Option B—No Project. Option A assumes the applicant would construct the project before the Service makes a final permit decision, but would not operate the project without an ITP. Option A is included in the FEIS because the applicant informed the Service that it may initiate and complete construction of the project before the Service makes a decision on the ITP application. Option B assumes that the applicant would not construct the project without an ITP. Under this option, nothing would change from current conditions and no impacts on the human environment would result from the project.

Alternative 1 (Proposed Action): Issuance of the requested permit and implementation of the conservation program described in the applicant's HCP. Alternative 1 is the Service's preferred alternative.

Alternative 2: Under the Modified Project Site Design Alternative, the project would not operate the five wind turbine generators (WTGs) closest to documented marbled murrelet nest

locations for the duration of the ITP. The Service would issue an ITP authorizing the level of incidental take expected to result from operation and maintenance of the remaining 33 WTGs and site management activities.

Alternative 3: Under the Enhanced Curtailment Regime of the Proposed Action Alternative, all 38 WTGs would operate under an expanded set of curtailment measures intended to minimize the potential for take of the covered species. The Service would issue an ITP authorizing the level of incidental take expected to result from covered activities in accordance with the additional curtailment measures.

The environmental consequences of each alternative were analyzed in the FEIS. The types of effects on covered species were similar across action alternatives, with take resulting from project operations being mitigated through land acquisition, derelict net removal, and power pole retrofits. Increasing the use of avoidance and minimization measures through different turbine curtailment regimes can reduce the amount of take of the covered species and the amount of renewable electricity produced; a commensurate reduction in the amount of derelict net removal and power pole retrofits are expected with alternatives that increase turbine curtailment.

Public comments received in response to the DEIS were considered, and the FEIS reflects clarifications of the existing analysis to address public comments.

The FEIS does not identify an environmentally preferred alternative. Pursuant to NEPA implementing regulations found at 40 CFR 15.2(b), the Service identified the No Action Alternative—Option B (no approval of the HCP/no issuance of the ITP/no project construction) as the environmentally preferred alternative in the ROD.

Decision and Rationale for Decision

Based on our review of the alternatives and their environmental consequences as described in our FEIS, we have selected the Proposed Action option (Alternative 1). The Proposed Action includes the applicant's implementation of the final HCP and the Service's issuance of an ITP authorizing incidental take of the covered species that may occur as a result of project operations.

In order to issue an ITP for covered species under the ESA, we must determine that the HCP meets the issuance criteria set forth in 16 U.S.C. 1539(a)(2)(B). In addition, in order to issue an ITP covering bald eagles and golden eagles, we must determine that the HCP meets the issuance criteria set forth in 50 CFR 22.26(f). We have made the determination that the HCP meets both sets of criteria, as described further in the ROD.

Authority

We provide this notice in accordance with the requirements of section 10(c) of the ESA (16 U.S.C. 1539(c)) and its implementing regulations (50 CFR 17.22 and 17.32), and NEPA (42 U.S.C. 4321 *et seq.*) and its implementing regulations (40 CFR 1506.6; 43 CFR part 46).

Robyn Thorson,

Regional Director, U.S. Fish and Wildlife Service.

[FR Doc. 2020–06977 Filed 4–2–20; 8:45 am]

BILLING CODE 4333–15–P

DEPARTMENT OF THE INTERIOR

Fish and Wildlife Service

[FWS–R1–ES–2020–N047; FXES11140100000–201–FF01E00000]

DeChaux Habitat Conservation Plan for the Yelm Subspecies of the Mazama Pocket Gopher, Thurston County, Washington; Categorical Exclusion

AGENCY: Fish and Wildlife Service, Interior.

ACTION: Notice of availability; request for comments.

SUMMARY: We, the U.S. Fish and Wildlife Service, received an application from Duane DeChaux (applicant) for an incidental take permit (ITP) pursuant to the Endangered Species Act of 1973, as amended (ESA). The ITP would authorize the applicant's take of the Yelm pocket gopher, incidental to otherwise lawful activities during construction of their single-family home and agricultural shop in Thurston County, Washington. The application includes a habitat conservation plan (HCP) with measures to minimize and mitigate the impacts of the taking on the covered species. We have also prepared a draft environmental action statement for our preliminary determination that the HCP and permit decision may be eligible for categorical exclusion under the National Environmental Policy Act. We provide this notice to open a public comment period and invite comments from all interested parties regarding the documents.

DATES: Please submit written comments by May 4, 2020.

ADDRESSES: To request further information or submit written comments, please use one of the following methods:

- *Internet:* You may view or download the habitat conservation plan, draft environmental action statement, and additional information on the internet at *http://www.fws.gov/wafwo/.*
- *Email: wfwocomments@fws.gov.* Include ''DeChaux HCP'' in the subject line of the message.
- *U.S. Mail:* Public Comments Processing, Attn: FWS–R1–ES–2020–N047; U.S. Fish and Wildlife Service; Washington Fish and Wildlife Office; 510 Desmond Drive SE, Suite 102; Lacey, WA 98503.
- *In-Person Drop-off, Viewing, or Pickup:* Call 360–753–5823 to make an appointment (necessary for viewing or picking up documents only) during regular business hours at the above address.

FOR FURTHER INFORMATION CONTACT: Tim Romanski, Conservation Planning and Hydropower Branch Manager, Washington Fish and Wildlife Office, U.S. Fish and Wildlife Service (see **ADDRESSES**), telephone: 360–753–5823. If you use a telecommunications device for the deaf, please call the Federal Relay Service at 800–877–8339.

SUPPLEMENTARY INFORMATION: We, the U.S. Fish and Wildlife Service (Service), received an application for an incidental take permit (ITP) pursuant to section 10(a)(1)(B) of the Endangered Species Act of 1973, as amended (ESA; 16 U.S.C. 1531). The ITP would authorize the applicant's ''take'' of the Yelm pocket gopher (*Thomomys mazama yelmensis*) incidental to otherwise lawful activities during construction of their single-family home and agricultural shop in Thurston County, Washington. The application includes a habitat conservation plan (HCP) with measures to minimize and mitigate the impacts of the taking on the covered species. We have also prepared a draft environmental action statement (EAS) for our preliminary determination that the HCP and permit decision may be eligible for categorical exclusion under the National Environmental Policy Act (NEPA; 42 U.S.C. 4321 *et seq.*). We provide this notice to open a public comment period and invite comments from all interested parties regarding the documents.

Background

Section 9 of the ESA prohibits ''take'' of fish and wildlife species listed as endangered or threatened. Under the ESA, the term ''take'' means to harass, harm, pursue, hunt, shoot, wound, kill,

trap, capture, or collect, or to attempt to engage in any such conduct (16 U.S.C. 1532(19)). The term ''harm,'' as defined in our regulations, includes significant habitat modification or degradation that results in death or injury to listed species by significantly impairing essential behavioral patterns, including breeding, feeding, or sheltering (50 CFR 17.3). The term ''harass'' is defined in our regulations as to carry out intentional or negligent actions that create the likelihood of injury to listed species to such an extent as to significantly disrupt normal behavioral patterns, which include, but are not limited to, breeding, feeding, or sheltering (50 CFR 17.3).

Section 10(a)(1)(B) of the ESA contains provisions that authorize the Service to issue permits to non-Federal entities for the take of endangered and threatened species caused by otherwise lawful activities, provided the following criteria are met: (1) The taking will be incidental; (2) the applicant will, to the maximum extent practicable, minimize and mitigate the impact of such taking; (3) the applicant will ensure that adequate funding for the plan will be provided; (4) the taking will not appreciably reduce the likelihood of the survival and recovery of the species in the wild; and (5) the applicant will carry out any other measures that the Service may require as being necessary or appropriate for the purposes of the plan. Regulations governing permits for endangered and threatened species are found in 50 CFR 17.22 and 17.32, respectively.

Proposed Action

The applicant proposes to construct a single-family residence, including a home, driveway, landscaping areas, underground utilities, and an agricultural building on 5 acres in Thurston County, Washington. All construction and landscaping activity will be confined to an area encompassing 1.28 acres. The applicant will continue to implement agricultural activities as conditioned by commitments in the HCP on the remaining acreage.

The property is currently occupied by the Yelm pocket gopher. The applicant proposes to offset adverse effects to the species by executing a conservation easement with Thurston County for a 2.58-acre conservation site within the 5-acre property. The conservation site will be managed for successful Yelm pocket gopher feeding, breeding, and sheltering. The Service proposes to issue the requested 10-year ITP based on the applicant's commitment to implement the HCP, if permit issuance criteria are met.

Public Comments

You may submit your comments and materials by one of the methods listed in **ADDRESSES**. We specifically request information, views, and suggestions from interested parties regarding our proposed Federal action, including adequacy of the HCP pursuant to the requirements for permits at 50 CFR parts 13 and 17 and adequacy of the EAS pursuant to the requirements of NEPA.

Public Availability of Comments

All comments and materials we receive become part of the public record associated with this action. Before including your address, phone number, email address, or other personally identifiable information in your comments, you should be aware that your entire comment—including your personally identifiable information—may be made publicly available at any time. While you can ask us in your comment to withhold your personally identifiable information from public review, we cannot guarantee that we will be able to do so. All submissions from organizations or businesses, and from individuals identifying themselves as representatives or officials of organizations or businesses, will be made available for public disclosure in their entirety. Comments and materials we receive will be available for public inspection by appointment, during normal business hours, at our Washington Fish and Wildlife Office (see **ADDRESSES**).

Next Steps

After public review, we will assess the comments received and finalize the EAS. We will evaluate the permit application, associated documents, and any comments received, to determine whether the permit application meets the requirements of section 10(a)(1)(B) of the ESA. We will also evaluate whether issuance of the requested section 10(a)(1)(B) permit would comply with section 7 of the ESA by conducting an intra-Service section 7 consultation under section 7(a)(2) of the ESA on the proposed ITP action. The final NEPA and permit determinations will not be completed until after the end of the 30-day comment period, and will fully consider all comments received during the comment period. If we determine that all requirements are met, we will issue an ITP under section 10(a)(1)(B) of the ESA to the applicant for the take of the covered species, incidental to otherwise lawful covered activities.

Authority

We provide this notice in accordance with the requirements of section 10(c) of the ESA (16 U.S.C. 1531 *et seq.*) and NEPA (42 U.S.C. 4321 *et seq.*), and their implementing regulations (at 50 CFR 17.32 and 40 CFR 1506.6, respectively).

Mary M. Abrams,

Deputy Regional Director, U.S. Fish and Wildlife Service.

[FR Doc. 2020–06980 Filed 4–2–20; 8:45 am]

BILLING CODE 4333–15–P

DEPARTMENT OF THE INTERIOR

Bureau of Indian Affairs

[201A2100DD/AAKC001030/ A0A501010.999900 253G]

Tribal Consultation Regarding the Indian Employment, Training, and Related Services Demonstration Act

AGENCY: Bureau of Indian Affairs, Interior.

ACTION: Notice of Tribal consultation.

SUMMARY: The Office of the Assistant Secretary—Indian Affairs (AS–IA) will be hosting a consultation session by webinar with interested Tribes regarding the 477 Program.

DATES: Comments must be received on or before Thursday, April 30, 2020. Consultation by webinar will be held Wednesday, April 15, 2020 at 1 p.m. See the **SUPPLEMENTARY INFORMATION** section of this notice for information on joining the webinar.

ADDRESSES: Send comments to: *consultation@bia.gov,* or by mail to: Deputy Bureau Director—Indian Services, MS–4660, 1849 C Street NW, Washington, DC 20240.

FOR FURTHER INFORMATION CONTACT: Dawn Selwyn, Acting Associate Deputy Bureau Director—Indian Services at (202) 208–6941.

SUPPLEMENTARY INFORMATION: Several Federal agencies, including Interior, are party to an interagency memorandum of agreement (MOA) to implement Public Law 102–477, the Indian Employment, Training, and Related Services Demonstration Act of 1992 (477 Program).

We invite Tribes to attend to a consultation session by webinar, to provide input on the 477 Program on Wednesday, April 15, 2020, 1 p.m. to 3 p.m.:

- *To join the Webinar, go to this link: https://bia-oishs.webex.com/bia-oishs/j.php?MTID=mfb5d92db4acef795d0d282c3f855187e,* enter meeting number: 795 506 785, Password: 477Program.

• *To join by phone:* (877) 417–9689 passcode 1730174.

The Department previously announced this webinar session in a March 6, 2020 letter to Tribal leaders. That letter also announced sessions on April 6, 2020 in Nashville, Tennessee, and April 28, 2020, in Burlingame, California that have since been canceled due to cancellation of the associated conferences (the Native American Finance Officers Association 38th Annual Conference and the 2020 Tribal Self-Governance Conference). The Department will announce any rescheduled sessions in a future letter to Tribes and by **Federal Register** notice, as appropriate.

Tara Sweeney,

Assistant Secretary—Indian Affairs.

[FR Doc. 2020–06953 Filed 4–2–20; 8:45 am]

BILLING CODE 4337–15–P

DEPARTMENT OF THE INTERIOR

Bureau of Land Management

[19X.LLID930000.L11700000.DF0000. LXSGPL000000.241A.4500132602]

Notice of Availability of the Draft Programmatic Environmental Impact Statement for Fuels Reduction and Rangeland Restoration in the Great Basin; California, Idaho, Nevada, Oregon, Utah, and Washington

AGENCY: Bureau of Land Management, Interior.

ACTION: Notice of availability.

SUMMARY: In accordance with the National Environmental Policy Act of 1969, as amended, the Bureau of Land Management (BLM) has prepared a Draft Programmatic Environmental Impact Statement (EIS) for Fuels Reduction and Rangeland Restoration in the Great Basin and by this notice is announcing for the opening of the comment period. The BLM will hold public meetings throughout the project area to share information with the public and answer questions.

DATES: To ensure comments will be considered, the BLM must receive written comments on the Draft Programmatic EIS for Fuels Reduction and Rangeland Restoration in the Great Basin within 60 days following the date the Environmental Protection Agency publishes its Notice of Availability in the **Federal Register**. The BLM will announce future meetings or hearings and any other public involvement activities at least 15 days in advance through public notices, media releases, and/or mailings and will ensure that the last public meeting is held at least 15 days before the public comment period ends.

ADDRESSES: You may submit comments related to the Draft Programmatic EIS for Fuels Reduction and Rangeland Restoration in the Great Basin by any of the following methods:

• *Website: https://go.usa.gov/xdfgV.*

• *Email: BLM_PEIS_Comments@blm.gov.*

• *Fax:* 208–373–3805.

• *Mail:* Bureau of Land Management, Idaho State Office, ATTN: Fuels Reduction Draft PEIS, 1387 South Vinnell Way, Boise, ID 83709.

Copies of the Draft Programmatic EIS for Fuels Reduction and Rangeland Restoration in the Great Basin are available for public inspection during regular business hours at the BLM Idaho State Office, 1387 South Vinnell Way, Boise, ID 83709. Interested persons may also review the Draft Programmatic EIS online at: *https://go.usa.gov/xdfgV.* Additional copies are available upon request at the BLM California, Nevada, Oregon/Washington, and Utah State Offices.

FOR FURTHER INFORMATION CONTACT: Ammon Wilhelm, telephone 208–373–3824; address BLM Idaho State Office, 1387 South Vinnell Way, Boise, ID 83709; email *awilhelm@blm.gov.* Persons who use a telecommunications device for the deaf (TDD) may call the Federal Information Relay Service (FIRS) at 1–800–877–8339 to contact the above individual during normal business hours. The FIRS is available 24 hours a day, 7 days a week, to leave a message or question with the above individual. You will receive a reply during normal business hours.

SUPPLEMENTARY INFORMATION: The sagebrush communities in the Great Basin are home to over 350 species of plants and wildlife and are a vital part of Western working landscapes. Wildfire and cheatgrass invasions are threatening these vegetative communities; approximately 45% of the historical range of sagebrush has been lost. Between 2009 and 2018, over 13.5 million acres burned on BLM land within the project area. Many sagebrush communities, both burned and unburned, are being overtaken by invasive annual grasses and encroaching pinyon-juniper. Fuels reduction and rangeland restoration treatments can reduce fire severity, which increases the vegetative communities' resistance to invasive annual grasses and improves their ability to recover after wildfire.

The Project Area covers approximately 223 million acres, including portions of California, Idaho, Nevada, Oregon, Utah, and Washington. Restoration projects would be implemented within an analysis area covering approximately 38.5 million acres of sagebrush communities managed by the BLM within the project area boundary. The analysis area is defined by the current and historical presence of sagebrush on BLM-administered lands.

The purpose of future treatments is to enhance the long-term function, viability, resistance, and resilience of vegetative communities and to protect, conserve, and restore sagebrush communities within the project area. Functioning and viable sagebrush communities provide multiple-use opportunities for all user groups as well as habitat for sagebrush-dependent species.

Intact sagebrush communities are disappearing within the Great Basin due to increased wildfires, the spread of invasive annual grasses, and the encroachment of pinyon-juniper. Restoration treatments such as fuels reduction and revegetation are needed to increase intact sagebrush communities and improve their ability to resist annual grass invasion and recover from disturbance such as wildfire.

The preferred alternative (Alternative B) analyzes a full suite of manual, chemical and mechanical treatments, including prescribed fire, seeding, and targeted grazing, to restore degraded vegetative communities within the 38.5 million-acre sagebrush analysis area.

Please note that public comments and information submitted including names, street addresses, and email addresses of persons who submit comments will be available for public review and disclosure at the above address during regular business hours (8 a.m. to 4 p.m.), Monday through Friday, except holidays.

Before including your address, phone number, email address, or other personal identifying information in your comment, you should be aware that your entire comment—including your personal identifying information—may be made publicly available at any time. While you can ask us in your comment to withhold your personal identifying information from public review, we cannot guarantee that we will be able to do so.

Authority: 40 CFR 1506.6, 40 CFR 1506.10.

John F. Ruhs,

Idaho State Director.

[FR Doc. 2020–06890 Filed 4–2–20; 8:45 am]

BILLING CODE 4310–GG–P

DEPARTMENT OF THE INTERIOR

Bureau of Land Management

[19XL.LLIDB03000.DF0000.LFHFFR 650000.241A.4500136018]

Notice of Availability for the Tri-State Fuel Breaks Project Final Environmental Impact Statement, Idaho and Oregon

AGENCY: Bureau of Land Management, Interior.

ACTION: Notice of availability.

SUMMARY: In accordance with the National Environmental Policy Act of 1969, as amended, and the Federal Land Policy and Management Act of 1976, as amended, the Bureau of Land Management (BLM) Boise District Office, Boise, Idaho, and the BLM Vale District Office, Vale, Oregon, have prepared the Tri-state Fuel Breaks Project Final Environmental Impact Statement (DOI–BLM–ID–B000–2015–0001–EIS) (Final EIS) and, by this notice, are announcing its availability.

DATES: The BLM will not issue a final decision on the proposal for a minimum of 30 days following the date the Environmental Protection Agency publishes its Notice of Availability in the **Federal Register**.

ADDRESSES: Interested persons may also review the Final EIS and accompanying background documents on the project website: *https://go.usa.gov/xPruu.* If you are unable to access the documents online and would like a paper copy, please contact the Project Lead identified below.

FOR FURTHER INFORMATION CONTACT: Lance Okeson, Project Lead, telephone: 208–384–3300; 3948 South Development Ave., Boise, ID 83705; email: *blm_id_tristate@blm.gov.* Contact Mr. Okeson to have your name added to our mailing list. Persons who use a telecommunications device for the deaf (TDD) may call the Federal Relay Service (FRS) at 1–800–877–8339 to contact Mr. Okeson during normal business hours. FRS is available 24 hours a day, 7 days a week, to leave a message or a question. You will receive a reply during normal business hours.

SUPPLEMENTARY INFORMATION: Southwestern Idaho, southeastern Oregon, and northern Nevada (the Tri-state area) comprise one of the largest intact strongholds of sagebrush-steppe habitat in the Northern Great Basin. This area supports big game and sagebrush-dependent species and provides for a variety of multiple-use activities. Assessments have identified the project area as a landscape particularly threatened by wildfire and the subsequent spread of invasive annual grasses. For example, the 2010 Rapid Eco-regional Assessment of the Northern Basin and Range and Snake River Plain identified the tri-state area as being at high risk for large-scale wildfires. Wildfires in this remote area can grow quickly and affect hundreds of thousands of acres of sagebrush-steppe habitat and working landscapes within a matter of days. The 2012 Long Draw Fire (558,198 acres), the 2014 Buzzard Complex Fire (395,747 acres), the 2015 Soda Fire (285,360 acres), the 2018 Martin Fire (435,569 acres), and the 2018 Sugar Loaf Fire (233,462 acres)—all of which were in or near the project area—each impacted over a hundred thousand acres within 24 hours.

The sagebrush-steppe landscape within this area represents one of the most impacted ecosystems in the United States. The Secretary of the Interior's 2017 Wildland Fire Directive and Secretarial Order 3372 call for active management of public lands to reduce the risk of catastrophic wildfire to America's forests and rangelands. Management of wildfire has been identified as one of the key issues for maintaining sage-grouse populations in sagebrush-dominated landscapes.

Purpose and Need

The purpose of the action is to provide a network of fuel breaks to enable wildland fire suppression resources in the tri-state area to more safely, rapidly, and effectively protect natural and cultural resources from wildfires. The strategy proposes to create and maintain fuel breaks along established roads through mechanical, biological, chemical, and prescribed fire treatments. Fuel breaks reduce fuel accumulations and disrupt fuel continuity in order to modify fire behavior and provide safe anchor points for firefighters. Fuel breaks allow firefighters to more rapidly contain and control wildland fires and increase suppression efficacy by enabling firefighters to engage wildfires over a larger area. This network would improve firefighters' opportunities for protecting one of the few remaining large areas of intact sagebrush-steppe habitat from the threat of wildland fire.

Alternatives

Under the No Action Alternative (Alternative 1), a fuel break network would not be created. Fuels adjacent to roadways would not be treated to reduce fuel accumulations and disrupt fuel continuity. Fire suppression personnel would continue to use existing paved and other improved BLM and county roads and natural topographic features to attempt holding and controlling wildfire.

Under all action alternatives, fuel breaks would only be implemented alongside existing roads. Fuel breaks would extend up to, but no farther than, 200 feet from both sides of roadways. Environmental constraints such as adjacent vegetation, terrain, soil type, and resource concerns would dictate width and treatment type in a given area. No fuel breaks would be constructed in designated wilderness. Fuel breaks could be established along the non-wilderness side of boundary roads adjacent to designated wilderness and along boundary roads surrounding wilderness study areas (WSAs).

The methods for fuel break creation and maintenance analyzed in the Final EIS include mowing, hand cutting, seeding (including seedbed preparation techniques), herbicide treatment, prescribed fire (*e.g.,* pile burning), and targeted grazing. These methods may be implemented in combination or as stand-alone treatments as necessary to meet the treatment objectives. Depending on available funding, implementation could occur over 15 years.

Alternative 2 contains the highest number and density of fuel breaks of all action alternatives. The BLM would implement and maintain a fuel break network along approximately 1,539 miles of existing roads: 731 miles in Idaho and 808 miles in Oregon.

Alternative 3 was developed to protect natural resources from large wildfires while minimizing impacts to cultural resources. Alternative 3 emphasizes avoidance of cultural resources and limiting impacts to special management areas (*e.g.,* wilderness and WSAs). The fuel break network would span 1,063 miles of existing roads: 505 miles in Idaho and 558 miles in Oregon.

Alternative 4 emphasizes protection to wildlife and their habitat while providing a network of fuel breaks that meets the purpose and need. The fuel break network would span 910 miles of existing roads: 450 miles in Idaho and 460 miles in Oregon.

The Final EIS introduces Alternative 5, the preferred alternative, which blends elements of Alternatives 2, 3, and 4 to provide a strategic fuel break network that limits adverse impacts to wildlife and cultural resources. This alternative reflects adjustments to fuel break routes previously analyzed in the Draft EIS under Alternatives 2, 3, and 4 based on the analysis of impacts and public comments received. The fuel break network for this alternative would

span 987 miles of existing roads: 435 miles in Idaho and 552 miles in Oregon.

Comments on the Draft EIS received from the public and internal BLM review were considered and incorporated as appropriate into the Final EIS. Public comments resulted in the development of Alternative 5, which is within the range of alternatives analyzed in the Draft EIS.

(Authority: 40 CFR 1506.6, 40 CFR 1506.10, and 43 CFR 1610.2)

Aimee D. K. Betts,

Acting Boise District Manager, Idaho.

Donald N. Gonzalez,

Vale District Manager, Oregon/Washington.

[FR Doc. 2020–06949 Filed 4–2–20; 8:45 am]

BILLING CODE 4310–GG–P

DEPARTMENT OF JUSTICE

Drug Enforcement Administration

Brewster Drug, Inc.; Decision and Order

On October 26, 2017, the DEA Acting Administrator issued an Order to Show Cause and Immediate Suspension of Registration (hereinafter collectively, OSC), to Brewster Drug, Inc. (hereinafter, Registrant), of Brewster, Washington. The OSC informed Registrant of the immediate suspension of its DEA Certificate of Registration AB6785161 and proposed its revocation, the denial of any pending application for renewal or modification of such registration, and the denial of any applications for additional DEA registrations, on the ground that its ''continued registration is inconsistent with the public interest.'' OSC, at 1 (citing 21 U.S.C. 824(a)(4) and 823(f)).

The OSC alleged that Registrant is a corporate entity in the state of Washington. *Id.* at 2. It further alleged that ''Brian Johnson and Nikki Johnson are the [Registrant's] 'Governing Persons'—as defined in the Revised Code of Washington (RCW) 23.95.105(12),'' and that ''Brian Johnson is listed as the Pharmacy's Registered Agent by the Washington State Corporation commission.'' *Id.* It further alleged that Brian Johnson is Registrant's Pharmacist-in-Charge (hereinafter, PIC). *Id.*

The OSC alleged that ''DEA's investigation [of Registrant] has revealed separate types of misconduct, which, taken together, pose an imminent danger to public health or safety.'' *Id.* at 2. Specifically, DEA conducted inspections of Registrant on August 15, 2017 and September 13, 2017,[1] which ''revealed that [Registrant] was unable to account for large volumes of controlled substances.'' *Id.* The Order also alleged that PIC Johnson ''engaged in the practice of pharmacy at [Registrant] while under the influence of controlled substances, including some of the same controlled substances for which [one of the audits] showed significant discrepancies.'' *Id.* The OSC further alleged that Registrant failed to maintain adequate records in violation of 21 U.S.C. 827(a) and 21 CFR 1304.03-.04, 1304.11, 1304.21, and 1305.13(e), and that PIC Johnson placed customers in danger by dispensing controlled substances to a patient without a valid prescription. *Id.* at 2–4.

Based on his ''preliminary finding that controlled substances were diverted from [Registrant] in connection with failure to maintain complete records and dispensing controlled substances without a valid prescription,'' the former Acting Administrator concluded that Registrant's registration ''is inconsistent with the public interest.'' *Id.* at 5. The former Acting Administrator also made the preliminary finding that Registrant's ''continued registration during the pendency of these proceedings would constitute an imminent danger to the public health and safety because of the substantial likelihood of an imminent threat that death, serious bodily harm or abuse of controlled substances will occur in the absence of this suspension.'' *Id.* The former Acting Administrator thus concluded that Registrant's continued registration during the pendency of the proceeding ''constitutes an imminent danger to the public health and safety'' and suspended its registration ''effective immediately.'' *Id.* (citing 21 U.S.C. 824(d)). Pursuant to 21 U.S.C. 824(f) and 21 CFR 1301.36(f), the former Acting Administrator authorized the DEA Special Agents and Diversion Investigators serving the OSC on Registrant to place under seal or to remove for safekeeping all controlled substances Registrant possessed pursuant to the immediately suspended registration. *Id.* The former Acting Administrator also directed those DEA employees to take possession of Registrant's Certificate of Registration AB6785161 and any unused order forms. *Id.*

The OSC notified Registrant of its right to request a hearing on the allegations or to submit a written statement while waiving its right to a hearing, the procedures for electing either option, and the consequence of failing to elect either option. *Id.* at 5–6 (citing 21 CFR 1301.43).

On October 31, 2017, a DEA Diversion Investigator (DI) personally served the OSC on Brian Johnson, Registrant's PIC at Registrant's address. GX 3, at 3. On the same day, Diversion Investigators took custody of Registrant's DEA Certificate of Registration and removed all controlled substances in Registrant's possession, pursuant to the Immediate Suspension Order. *Id. See also* GX 3, Appendix 4 (Inventory of Seized Items).

According to the Government, since the date of service of the Order, neither Registrant, nor anyone purporting to represent it, has filed a written statement or made any communication in writing to the Agency since the OSC was served. Request for Final Agency Action (hereinafter, RFAA), at 2; *see also* GX 3, at 3. Based on the Government's representation, I find that more than 30 days have now passed and Registrant has neither requested a hearing nor submitted a written statement while waiving its right to a hearing. I therefore find that Registrant has waived its right to a hearing or to submit a written statement, and issue this Decision and Order based on the record submitted by the Government, which constitutes the entire record before me. *See* 21 CFR 1301.43(e).

On February 25, 2019, I issued an Order taking notice of the Agency's registration records, which showed that on January 16, 2018, DEA approved the registration of a different retail pharmacy, called ''Brewster Marketplace Pharmacy & T.V. Hardware LLC'' at the same street address as Registrant. Order dated February 25, 2019 (hereinafter, February Order). The February Order directed the Government ''to investigate and to address whether Registrant has discontinued its business practice as a retail pharmacy and whether its DEA registration has thus terminated pursuant to 21 CFR 1301.52.'' *Id.* at 2. Additionally, the Order directed the Government to determine whether Registrant has forfeited its right, title and interest in the seized controlled substances. *Id.* at 2–3.

On March 25, 2019, I received the Government's Reply to Administrator's February Order (hereinafter, GR), which confirmed that Registrant discontinued business on December 29, 2017, and sold the business to Brewster Marketplace Pharmacy and Hardware, LLC (hereinafter, Marketplace). GR, at 2. The Government asserts that because

[1] The Government did not include any further mention of the September 13, 2017 audit in the record provided to me; therefore, the findings herein are limited to the August 15, 2017 audit.

Registrant discontinued professional practice, the regulation states that the registration terminates ''without any further action by the Administration.'' GR, at 2 (quoting 21 CFR 1301.52). Because Registrant discontinued business, DEA issued a letter on March 15, 2019, notifying Registrant that its DEA-seized controlled substances would be disposed of pursuant to 21 U.S.C. 824(g). *Id.;* GRX 1. On March 20, 2019, DEA received an email from Marketplace claiming an ownership interest in the controlled substances. *Id.* at 3; GRX 2. Therefore, despite the Registrant's discontinuation of business, the Government requests that I affirm the ISO in order to resolve title to Registrant's DEA-seized property. *Id.* (citing *ChipRX, L.L.C., d/b/a City Center Pharmacy,* 82 FR 51433 (2017)).

According to the Controlled Substances Act (hereinafter, CSA), the controlled substances inventory that DEA seized from Registrant's registered location on the date DEA served the OSC ''shall be forfeited to the United States'' and ''[a]ll right, title, and interest in such controlled substances shall vest in the United States upon a revocation order becoming final.'' 21 U.S.C. 824(f). Disposition of Registrant's seized controlled substances inventory remains outstanding even though Registrant discontinued business, and, therefore, its registration is terminated. 21 CFR 1301.52. I shall, therefore, adjudicate this OSC to finality as required by 21 U.S.C. 824(f). *See also Jeffrey D. Olsen, M.D.,* 84 FR 68474 (2019) (declining to dismiss an immediate suspension order as moot when the registrant allowed the registration subject to the ISO to expire before final adjudication of the ISO).[2]

I make the following findings.

Findings of Fact

Registrant's DEA Registration

Registrant, a retail pharmacy, was a corporate entity organized under the laws of Washington State. OSC, at 2. It was registered with the DEA as a retail pharmacy authorized to dispense controlled substances in schedules II–V pursuant to Registration AB6785161, with a registered address at 811 US Highway 97, P.O. Box 798, Brewster, Washington 98812. GX 1 (Certificate of Registration). Registrant's registration would have expired by its terms on July 31, 2020; however, it appears that the Registrant discontinued business on December 29, 2017. *Id.;* GR, at 2.

According to the DI in charge of this investigation, at the time of the investigation, Brian Johnson and Nikki Johnson were listed as Registrant's ''Governing Persons,'' under the Revised Code of Washington, which defines ''Governor'' as ''a director of a business corporation . . . or any other person under whose authority the powers of an entity are exercised and under whose direction the activities and affairs of the entity are managed pursuant to the organic law and organic rules of the entity.'' GX 3, at 2 (Declaration of Diversion Investigation) (citing Wash. Rev. Code Ann. § 23.95.105(12) (West 2019)); *see also* GX 3, Appendix 1 (copy of web page entitled ''Corporations: Registration detail'' obtained from Washington Secretary of State website, *www.sos.wa.gov/corps/search_detail*). The same web page also listed Brian Johnson as the Registered Agent for Registrant.[3]

According to the DI, Brian Johnson worked as Registrant's PIC and is married to Nikki Johnson. GX 3, at 2. Agency registration records show that Brian Johnson is the contact for Registrant's DEA registration.[4]

Investigation by Washington State Pharmacy Investigator

The Government's evidence includes a sworn Declaration, dated March 15, 2018, by an investigator (hereinafter, Investigator V.) employed by the Washington State Pharmacy Quality Assurance Commission, Washington State Department of Health (DOH).[5] GX 4. According to the Declaration, the investigation into dispensing practices at Registrant was initiated by a physician's complaint to the DOH, which alleged that a patient (hereinafter, Patient M.R.) had obtained multiple dispensings of oxycodone based on a single prescription presented to Registrant. GX 4, at 1 (Declaration of Investigator V.).

According to the Government's evidence, a physician practicing in Wenatchee, Washington (hereinafter, Dr. F.) averred in a sworn declaration that, while she was treating Patient M.R. on February 17, 2017, the patient showed her three bottles of oxycodone filled by Registrant. GX 5 (Declaration of Dr. F.), at 1. Patient M.R. told Dr. F. that he had obtained them from Registrant, and that he did not know how much he had received, but ''recalled the first bottle was for a smaller amount than on the prescription as they did not have enough pills to fill as written'' and that ''[h]e later received the remainder from that prescription.'' *Id.* Dr. F. stated, ''[e]ach of the bottles had a sticker indicating that the bottle was for patient M.R.'' and ''[o]ne of the bottles was labeled for oxycodone 30 mg, and the other two for oxycodone 15 mg.'' *Id.* Dr. F. then ''reviewed M.R.'s patient record from a prior visit'' and found that the records showed that a nurse practitioner at her practice (N.P.) had issued a single prescription for 182 tablets of oxycodone 30mg to M.R. on January 20, 2017. *Id.* The doctor also compared M.R.'s patient record with the Washington state Prescription Drug Monitoring Program (hereinafter, PMP), which showed that Registrant reported three transactions of dispensing oxycodone to M.R. in early February 2017, after the prescription written by N.P. *Id.* at 1–2.

Dr. F. stated that she telephoned Registrant on February 17, 2017, and asked the PIC to find out how much oxycodone had been provided to patient M.R., but the PIC was unable to tell her. *Id.* Dr. F. then submitted a complaint to the Washington Pharmacy Commission. GX 4, at 1.

Investigator V. reported that he ''obtained a copy of the original prescription written by N.P. for Patient M.R. from [Registrant],'' which ''has a fill sticker from [Registrant] reflecting prescription number N1133568'' and indicates the ''prescription was filled on February 11, 2017.'' *Id.* ''The initials 'BJ'[6] are on the fill sticker indicating that the prescription was filled by PIC Brian Johnson.'' *Id.* at 1; GX 4, Appendix 1. The Investigator attached a true and correct copy of the prescription to his Declaration. *Id.* at 1; GX 4, Appendix 1. The prescription notes ''Dispense as Written: No'' and includes a ''Start Date'' of January 20, 2017, but

[2] My implementation of these statutory and regulatory provisions also provides transparency given Marketplace's claim of an ownership in the controlled substances inventory that DEA seized in conjunction with its service of the OSC.

[3] The website currently lists the business status as ''administratively dissolved.''

[4] Under the Administrative Procedure Act (APA), an agency ''may take official notice of facts at any stage in a proceeding—even in the final decision.'' U.S. Dept. of Justice, *Attorney General's Manual on the Administrative Procedure Act* 80 (1947) (Wm. W. Gaunt & Sons, Inc., Reprint 1979). In accordance with the APA and DEA's regulations, Registrant is ''entitled on timely request to an opportunity to show to the contrary.'' 5 U.S.C. 556(e); *see also* 21 CFR 1316.59(e). To allow Registrant the opportunity to refute the facts of which I take official notice, Registrant may file a motion for reconsideration within fifteen calendar days of service of this order which shall commence on the date this order is mailed.

[5] The Government's evidence includes the Declarations of the State Investigator and Dr. F., including attachments, but does not explain how it obtained them, nor how this Agency became aware of the State's investigation.

[6] The Registrant's PIC's name is Brian Johnson (B.J.).

the ''End Date'' is blank and there are ''0 (Zero)'' refills. GX 4, Appendix 1.

The Investigator obtained a copy of the Washington state PMP report for Patient M.R. ''to identify what [Registrant] reported to the PMP'' regarding the controlled substance prescriptions it filled for M.R. *Id.* He noted that ''a Pharmacy is required to report to the Washington State PMP every instance where a controlled substance is dispensed to a patient.'' *Id.* He reported and included a record demonstrating that Patient M.R.'s PMP report showed that in February 2017, Registrant reported three dispensings of oxycodone prescribed by N.P.:

(1) 364 tablets oxycodone 15mg on February 1 under prescription #1132787, a 14 day supply;

(2) 182 tablets oxycodone 30mg on February 11 under prescription #1133568, a 14 day supply;

(3) 364 tablets oxycodone 15mg on February 11 under prescription #1132787, a 14 day supply.

Id. at 1–2; GX 4, Appendix 3 (PMP database printout). The Investigator stated that these were the only reports made by Registrant to the PMP, and all were associated with the single prescription issued by N.P. to Patient M.R. on January 20, 2017. *GX 4,* at 2; *accord* GX 5 (Declaration of Dr. F). In consideration of the DI's attestation regarding the report's authenticity as a true and correct copy of the Washington State PMP, and in the absence of any evidence to the contrary, I find that this report represents a true copy of the Washington State PMP and accurately reflects what Registrant reported as its dispensings of oxycodone to M.R. on the dates listed.

The Investigator also obtained Registrant's patient profile for Patient M.R. for the time period February 1—February 28, 2017, which shows Registrant's internal dispensing record of prescriptions it filled for M.R. GX 4, at 2. A copy of this report was submitted to the Government's evidentiary record. GX 4, Appendix 2. The patient profile records two oxycodone dispensings on February 11, 2017, showing prescription number 1132787 for 364 tablets of oxycodone 15mg, and prescription number 1133568 for 182 tablets of oxycodone 30 mg. *Id.* at 1. Registrant's patient profile does not show any oxycodone dispensing to Patient M.R. on February 1, 2017. *Id.*

According to the Investigator, Dr. F. sent him photocopies of the three prescription bottles patient M.R. brought to his appointment. GX 4, at 2. ''She [ ] informed me that her patient, M.R., had three bottles of various strength oxycodone that [he] reported [he] obtained from Registrant based on the single prescription from [N.P.].'' *Id.; see also* GX 4, Appendix 4. The photocopies attached to the Investigator's report are poor quality but include four pages, each showing three prescription bottles, each from a slightly different angle, depicting:

1) One bottle labeled RX#N113278[ ][7] for 364 tablets of oxycodone dated February 1, 2017, issued to [M.R.] by Dr. [N.P.], with the initials ''BJ''[8] on the label.

(2) One bottle labeled RX#N1132787 for 364 tablets of oxycodone dated February 1, 2017, issued to [M.R.] by Dr. [N.P.], with the initials ''BJ'' on the label), and

(3) One bottle labeled RXN#113356[], for 182 tablets of oxycodone, dated February 11, 2017, issued to [M.R.] by [N.P.], with the initials ''BJ'' on the label.

GX 4, Appendix 4, at 1–4.[9] The three bottles appear to bear the name ''Brewster Drug;'' however, corresponding dosage units are not clearly shown on any of the copies. *Id.*

Investigator V. further attested that he spoke with PIC Brian Johnson regarding the Registrant's dispensing multiple bottles of various strength oxycodone on the basis of a single prescription, and he memorialized the conversation in a Memorandum, dated June 13, 2017. GX 4, Appendix 5. He reported, ''PIC Johnson explained that he may have filled the prescription for 30 mg oxycodone tablets with 15 mg tablets because he did not have enough supply on hand,'' but he ''was not sure when or what quantities he dispensed to patient M.R., and he could not account for prescription RX#1133568, shown in the PMP.'' GX 4, at 2. Investigator V. further stated he ''confronted PIC Johnson on the fact that he had only a record of the single issued prescription corresponding with prescription number 1132787,'' and ''he acknowledged that he had made no record of partial fills or substitute fills and had no other explanation'' for M.R.'s three prescription bottles. *Id.; see also* GX 4, Appendix 5 (Investigator V.'s Memorandum of Conversation with PIC).

According to the Investigator, PIC Johnson ''confirm[ed] that it was he who was the responsible pharmacist on each of the dispensing[s],'' but that ''he was sure the patient wasn't given more medication than the doctor had prescribed but doesn't recall the exact amount in each bottle.'' GX 4, Appendix 5. He also told the Investigator that ''he [didn't] recall the exact events,'' but believed he ''either didn't have enough, or any, of the 30 mg Oxycodone so he gave him a partial quantity of the 15 mg tablets'' and that he ''didn't document how much he gave him at this time.'' *Id.* Further, according to the Memorandum, PIC Johnson told Investigator V. that ''when the patient returned for the remainder of the prescription he believe[d] he again didn'[t] have enough of the 30mg tablets to complete the order so he provided a combination of both 15mg and 30 mg tablets'' and that ''the patient has been on this drug for quite some time and he believe[d] the patient [was] knowledgeable enough to take the correct bottle and dose and not to overdose himself.'' *Id.*

Additionally, Investigator V.'s Memorandum reported that Johnson stated that ''he wasn't sure how the patient received a bottle dated [February 1, 2017] as he doesn't recall giving him that one and it's not listed in his computer,'' but he acknowledged that the prescription was entered into the system on February 1, 2017. *Id.* The Memorandum further reported that PIC Johnson ''recognize[d] that he failed to keep records of each time and quantity given to the patient.'' *Id.* The Investigator finally reported that he asked a pharmacy employee to retrieve the hard copy prescriptions for Rx#1132787 [364 oxycodone 15mg] and Rx#1133568 [182 oxycodone 30mg], but #1132787 was not located. *Id.* According to the Memorandum, PIC Johnson also attempted to retrieve them and did not locate them. *Id.*

Investigator V.'s Memorandum also stated that PIC Johnson ''identified the partial adhesives near the back tag label applied to the [ARNP's] prescription, which he opined may have been the previous label [RX 1132787 for 364 oxycodone 15mg] that he put on the prescription and then must have removed it when he filled the 30mg tablets.'' *Id.* According to the Memorandum, PIC Johnson admitted to Investigator V., ''Boy I guess I shouldn't

[7] The last digit is unclear from the photocopy, but the declarations indicate that this prescription was for RX #1132787 and I find that it is probable that the missing number is a 7.

[8] The evidence demonstrates that BJ is PIC Brian Johnson. *See* GX 4.

[9] The PMP demonstrates that there were three prescriptions, one on February 1st, and two on February 11th, but the copies of bottle labels provided by Dr. F. demonstrate two bottles on February 1st and one on February 11th. This discrepancy is not further described in the Government's evidence; however, the PMP is clearly inaccurate, so the bottle labels seem to represent a more accurate depiction of what Registrant actually filled. Regardless of which is more accurate, the evidence is clear that Registrant filled one prescription in three different ways on two different dates and did not appropriately maintain records, as further described herein.

have done that'' [10] and ''I guess I [f--ed] this one up. I quit. Do you know anybody who wants to buy a pharmacy?'' *Id.*

The Diversion Investigator's Investigation

The DI reported, in a sworn Declaration dated March 19, 2018, that he conducted an accountability audit for Registrant on August 15, 2017. GX 3, at 2. As part of the audit, he conducted a physical count and review of some, but not all, controlled substances on hand at Registrant, and ''compared that count with the [Registrant's] biennial inventory records, dispensing logs, DEA 222 forms, and invoices compared with shipping records, which [he] had subpoenaed from pharmacy suppliers McKesson and Amerisource Bergen.'' *Id.* According to the DI, the results of his audit showed that Registrant was short 10,594 oxycodone 30 mg tablets and 11,125 Carisprodol 350 mg tablets, and had overages of hydrocodone/apap 10/325 mg by 3,717 tablets, and overages of Tramadol 50 mg by 5,018 tablets.[11] *Id.* The DI's declaration explained that when he began the audit on August 15, 2017, ''DEA was not aware that PIC Johnson had tested positive for amphetamines, and did not select amphetamines as a controlled substance to audit.'' *Id.*

The DI stated that he issued an administrative subpoena to Three Rivers Hospital in Brewster, Washington to obtain PIC Johnson's patient file. *Id.* According to the DI, the records show that PIC Johnson had tested positive in urine drug screens for oxycodone and amphetamines on July 29, 2017, and October 7, 2017, and that he had ''made various admissions regarding his drug abuse during the course of his treatment for drug overdose.'' *Id.; see also* GX 3, Appendix 2 (subpoenaed Three Rivers Hospital records).

The DI also obtained Emergency Medical Service records from the Douglas Okanogan County Fire Department,[12] which demonstrated that on July 29, 2017, and October 7, 2017, Emergency Medical Services (hereinafter, EMS) were dispatched to Registrant to attend to PIC Johnson. GX 3, at 3 (citing GX 3, Appendix 3 (EMS records)).

The DI also reported that during an interview with PIC Johnson on October 31, 2017, which included two of his DEA colleagues, ''PIC Johnson admitted that he was diverting controlled substances from the pharmacy and was, on average, taking approximately 4–5 oxycodone 30 mg tablets at a time, twice a day,'' but he ''could not recall . . . how long he had been diverting controlled substances from the pharmacy.'' *Id.* Further, PIC Johnson admitted that he had abused oxycodone on the previous night and ''admitted that he abused amphetamines which he diverted from Registrant, but not as often as he abused diverted oxycodone.'' *Id.* Further, according to the DI, PIC Johnson told them during the interview that in spite of his regular diversion, abuse and impairment, ''it would be more dangerous to have a new pharmacist who does not know the community operating [Registrant] than it would be for [him] to continue operating [it].'' *Id.*

The DI also interviewed PIC Johnson's wife, Nikki Johnson, who told them that she began noticing that PIC Johnson was using controlled substances ''about a year prior,'' and that ''he would 'plan ahead' and bring home controlled substance pills [from Registrant] in his pockets and she would occasionally find controlled substances pills in his pockets at home.'' *Id.*

PIC Brian Johnson's Treatment for Substance Abuse

In particular, the Government's evidence includes a copy of a medical incident report obtained by the DI from the Douglas Okanogan County Fire Department on July 29, 2017.[13] GX 3, Appendix 3. The incident report states that EMS responded to a call for ''Heat/Cold Exposure'' at Registrant's location at 811 Highway 97, Brewster, where the Emergency Medical Technicians (EMTs) found PIC Johnson suffering from ''possible heat stroke,'' ''confused/disoriented,'' and displaying symptoms of ''Cognitive-Confusion/Disorientation.'' *Id.* at 1–2. The report states, ''[I]t is known to EMS crew that patient has recently been to rehab for opioid drug use.'' *Id.* at 2. The EMTs administered Narcan (Naloxone) and transported him to the local hospital. *Id.*

PIC Johnson's patient records from Three Rivers Hospital (TRH) show that on July 29, 2017, PIC Johnson was treated in the emergency room after EMS documented ''[c]oncern for heatstroke vs. drug OD?'' GX 3, Appendix 2, at 2. The results of an administered urine drug test were positive for amphetamines and oxycodone. *Id.* at 20. The ''Nurses Notes'' in the hospital record state that prior to discharge from the hospital a ''brief intervention [was] done regarding drug use.''' *Id.* at 7.

A document titled ''ER Note'' for PIC Johnson on that date states that his chief complaint was ''altered mental status'' and that ''he denie[d] taking any medications,'' and ''denies recreational drug use''; however, the reviewing doctor's assessment was ''Narcotic overdose.'' *Id.* at 19–21.

The records attached to the DI's Declaration show that on September 29, 2017, the EMS responded to an emergency call on Highway 97, Pateros, Washington, where they encountered PIC Johnson sitting ''in a car along the road [ ] shaking and non-respon[sive] to [rescue personnel] on the scene.'' GX 3, Appendix 3, at 4. The EMTs reported that he ''kept saying that he was late and needed to get to work.'' *Id.* The EMTs assessed him with ''altered mental status'' and transported him to the hospital. *Id.* at 3. The corresponding hospital report states that he ''[d]enies any drug use in the past 30 days.'' GX 3, Appendix 2, at 41. According to the report, during his treatment in the emergency room, police ''received orders from a judge to obtain labs,'' and he was discharged into police custody and ''taken to jail for DUI.'' *Id.* at 45. The reviewing doctor's report states that he ''reports a history of narcotic dependence in the past and though he denies dependency now he admits to abuse.'' *Id.* at 46. No urine drug screen was performed at the hospital but the treating doctor's report was amended to state, ''The main issue will be withdrawal from narcotics which may happen in the next 24 hours.'' *Id.* at 48.

On October 7, 2017, the EMS responded to a call at Registrant in response to a complaint of PIC Johnson ''shaking, possibly having seizure while standing.'' GX 3, Appendix 3, at 8. The EMT's report states that, upon arrival, they encountered PIC Johnson and the field assessment of him was ''Substance Abuse—Opioid.'' *Id.* at 10.

According to the hospital patient records for PIC Johnson on that date, a urine drug screen showed positive results for amphetamines and

[10] Ellipses omitted from quote.

[11] The Government's evidence does not include any evidence of the DI's audit calculations, beginning or ending inventories, dispensing records, receiving records, DEA 222 order forms, invoices or a computation chart. The DI's declaration touches on some of this information, and there is no evidence to contradict it, so I am sustaining those allegations that are adequately explained in the DI Declaration.

[12] The subpoenaed Fire Department records in Appendix 3 also included an emergency dispatch on September 29, 2017, which was not included in the DI's declaration.

[13] The Government's evidence does not include a subpoena for the medical reports obtained from Douglas Okanogan County Fire Department, nor is there a corresponding attestation of authenticity to those records, however, the DI attests that that all information included in his Declaration is true and correct, and specifically states that he attached the records obtained from the subpoenas in Appendix 2; therefore, I find that these records appear to be authentic.

oxycodone. GX 3, Appendix 2, at 69, 77. The treating physician's report states that PIC Johnson ''admits during ER course to problem with using drugs and wishes to stop but declines admission and states he knows how to get off drugs with Methadone or Suboxone'' and that he planned to enter rehab when ''able to be free from his pharmacy business for at least a [three] week period.'' *Id.* at 72. He also admitted he ''has no prescribed medication from a provider . . . [h]e states he is a pharmacist and has access to medications.'' *Id.* The treating physician's impression was ''drug intoxication, mixed substance abuse, narcotics and amphetamine, acute, recurrent. Illicit drug use.'' *Id.*

Allegation That PIC Johnson Abused Registrant's Registration To Fuel His Drug Addiction

The Government has demonstrated that PIC Johnson used the Registrant's registration to procure drugs for his own addiction. By his own admission to the DI, PIC Johnson was ''diverting controlled substances from the pharmacy and was, on average, taking approximately 4–5 oxycodone 30 mg tablets at a time, twice a day.'' GX 3, at 3. His wife, and co-owner of Registrant, confirmed this admission in stating to the DI that PIC Johnson ''would 'plan ahead' and bring home controlled substance pills [from Registrant] in his pockets.'' *Id.* The evidence is clear that Registrant was enabling this drug addiction by dispensing to PIC Johnson without a prescription and without maintaining required records. Although I believe that the Government has provided substantial evidence regarding PIC Johnson's abuse of Registrant's registration through PIC Johnson's admission, this violation was not alleged in the OSC; therefore, I will not ultimately consider this violation as a basis for sanction in this case. Had this case gone to hearing, the violation would have likely been adequately noticed during the prehearing phase.[14] In this case, I believe that there is enough evidence that Registrant's registration is inconsistent with the public interest without it.

Allegation That PIC Johnson Was Impaired While Working as Pharmacist-In-Charge

Based on the declaration of the DI and the records from EMS and Three Rivers Hospital, I find that the Government has established that PIC Johnson was impaired on at least two occasions, while working as the Pharmacist in Charge. GX 3, Appendix 2 & 3. Particularly, EMS was dispatched on July 29, 2017, and October 7, 2017, to Registrant to attend to PIC Johnson. GX 3, at 3 (citing GX 3, Appendix 3). Laboratory tests conducted at the hospital on those two occasions demonstrated that PIC Johnson tested positive for oxycodone and amphetamines. GX 3, Appendix 2, 20; *id.* at 69, 77.

Allegation That Registrant Failed To Keep Accurate Records

Based on the uncontested declaration of the DI, I find that Registrant failed to maintain adequate records of its controlled substances.[15] GX 3, at 2. I find that an accountability audit conducted on August 15, 2017, demonstrated that Registrant was short 10,594 oxycodone 30 mg tablets and 11,125 Carisoprodol 350 mg tablets, and had overages of hydrocodone/apap 10/325 mg by 3,717 tablets, and overages of Tramadol 50 mg by 5,018 tablets.[16] [17] *Id.*

Regarding the multiple fillings of Patient M.R.'s prescription, I find that the Government's evidence substantially indicates that on more than one occasion, PIC Johnson dispensed varying dosages of Oxycodone to Patient M.R. on the basis of a single prescription. Although the evidence is unclear as to how many bottles were filled on February 1, 2017, it appears that the PMP entries for the prescription were inaccurate, because it shows only one prescription filled on February 1, for the full prescription. *See* GX 4, Appendix 1 (PMP data for February 1, 2017 and February 11, 2017) (showing three dispensings on two different dates, one of which is for the full prescription). I find that both the State PMP and the labels on the bottles show that the Registrant filled a prescription for a prescription number that was entirely invented (no record from the prescriber or at the pharmacy), and also filled the full amount of the single prescription twice. *Id.;* GX 5, at 2.[18]

Discussion

Public Interest Analysis

The Government asserts that Registrant's registration should be revoked because its continued registration is inconsistent with the public interest, and requests that I issue a final order affirming the Order of Immediate Suspension issued on October 26, 2017. RFAA, at 1. According to the Government, Registrant's pharmacist in charge ''circumvented the CSA's prescription requirement by leapfrogging the doctor-patient component of the CSA's closed system, obtained [*sic*] a DEA Registration, and used the Pharmacy to order wholesale quantities of controlled substances for his abuse.'' RFAA, at 7. It also contends that PIC Johnson dispensed controlled substances to patient M.R. contrary to the CSA's prescription requirement, and that the PIC's repeated drug overdoses, while working as the Pharmacist-in-Charge at the Registrant, demonstrates conduct which may threaten the public health and safety.

In addition, the Government requests that all controlled substances seized from Registrant on October 31, 2017, pursuant to the Order of Immediate Suspension be forfeited to the United States. *Id.* at 1.

Section 304(a) of the CSA provides that ''[a] registration . . . to . . . dispense a controlled substance . . . may be suspended or revoked by the Attorney General upon a finding that the registrant . . . has committed such acts as would render [its] registration under section 823 of this title inconsistent with the public interest as determined under such section.'' 21 U.S.C. 824(a)(4). In the case of a ''practitioner,'' which is defined in 21 U.S.C. 802(21) and includes a pharmacy, the CSA requires that the Agency consider the following factors in making the public interest determination:

(1) The recommendation of the appropriate State licensing board or professional disciplinary authority.

[14] In this case, the Government has provided no evidence or legal arguments regarding its provision of due process to the Registrant related to the allegation not charged in the OSC that would allow me to consider PIC Johnson's admission as a basis for sanction.

[15] The Government also alleged in the OSC that Registrant failed to record the date and quantity of controlled substances received on multiple copies of DEA Form 222; however, the DI's sworn declaration did not include confirmation of this allegation; therefore, this allegation is not sustained.

[16] The OSC also alleged that the audit showed shortages of morphine immediate release, morphine extended release and meperidine; however, the DI's sworn declaration did not include confirmation; therefore, this allegation is not sustained.

[17] The Government's evidence does not include any evidence of the DI's audit calculations, beginning or ending inventories, dispensing records, receiving records, DEA 222 order forms, invoices or a computation chart; however, there is no information to contradict the DI's sworn declaration, so I will find the facts as presented therein.

[18] The evidence also demonstrates that Registrant engaged in unlawful dispensing to PIC Johnson, which would provide further evidence of recordkeeping violations, but as explained herein, I am not ultimately considering violations related to PIC Johnson's self-dispensing in my sanction determination, because these violations were not included in the OSC, nor was Registrant otherwise provided with notice that they would be a basis for sanction.

(2) The applicant's experience in dispensing . . . controlled substances.

(3) The applicant's conviction record under Federal or State laws relating to the . . . distribution[ ] or dispensing of controlled substances.

(4) Compliance with applicable State, Federal, or local laws relating to controlled substances.

(5) Such other conduct which may threaten the public health and safety.

21 U.S.C. 823(f). These factors are considered in the disjunctive. *Robert A. Leslie, M.D.,* 68 FR 15227, 15230 (2003).

According to Agency decisions, I ''may rely on any one or a combination of factors and may give each factor the weight [I] deem[ ] appropriate in determining whether'' to revoke a registration. *Id.; see also Jones Total Health Care Pharmacy, LLC* v. *Drug Enf't Admin.,* 881 F.3d 823, 830 (11th Cir. 2018) (citing *Akhtar-Zaidi* v. *Drug Enf't Admin.,* 841 F.3d 707, 711 (6th Cir. 2016); *MacKay* v. *Drug Enf't Admin.,* 664 F.3d 808, 816 (10th Cir. 2011); *Volkman* v. *Drug Enf't Admin.,* 567 F.3d 215, 222 (6th Cir. 2009); *Hoxie* v. *Drug Enf't Admin.,* 419 F.3d 477, 482 (6th Cir. 2005). Moreover, while I am required to consider each of the factors, I ''need not make explicit findings as to each one.'' *MacKay,* 664 F.3d at 816 (quoting *Volkman,* 567 F.3d at 222); *see also Hoxie,* 419 F.3d at 482. ''In short, . . . the Agency is not required to mechanically count up the factors and determine how many favor the Government and how many favor the registrant. Rather, it is an inquiry which focuses on protecting the public interest; what matters is the seriousness of the registrant's misconduct.'' *Jayam Krishna-Iyer, M.D.,* 74 FR 459, 462 (2009). Accordingly, as the Tenth Circuit has recognized, findings under a single factor can support the revocation of a registration. *MacKay,* 664 F.3d at 821.

Also, pursuant to section 824(d), ''[t]he Attorney General may, in his discretion, suspend any registration simultaneously with the institution of proceedings under this section, in cases where he finds that there is an imminent danger to the public health or safety.'' 21 U.S.C. 824(d)(1). Congress has defined ''the phrase 'imminent danger to the public health or safety' [to] mean[ ] that, due to the failure of the registrant to maintain effective controls against diversion or otherwise comply with the obligations of a registrant under [the CSA], there is a substantial likelihood of an immediate threat that death, serious bodily harm, or abuse of a controlled substance will occur in the absence of an immediate suspension of the registration.'' *Id.* at (d)(2).

Under the Agency's regulation, ''[a]t any hearing for the revocation or suspension of a registration, the Administration shall have the burden of proving that the requirements for such revocation or suspension pursuant to . . . 21 U.S.C. 824(a) . . . are satisfied.'' 21 CFR 1301.44(e). In this matter, I have considered all of the factors and find that the Government's evidence with respect to factors two, four and five establishes that Registrant, through its corporate principal and pharmacist-in-charge, has committed acts which render its registration ''inconsistent with the public interest'' and which support the revocation of its registration. 21 U.S.C. 824(a)(4). I further find that the Government's evidence, supports my initial finding and further establishes that Registrant's misconduct satisfies the imminent danger standard of 21 U.S.C. 824(d), in that, Registrant's failure ''to maintain effective controls against diversion or otherwise comply with the obligations of a registrant under'' the CSA created ''a substantial likelihood of an immediate threat that . . . abuse of a controlled substance will occur in the absence of an immediate suspension of [its] registration.'' *Id.*

Factors Two and/or Four—The Registrant's Experience in Dispensing Controlled Substances and Compliance With Applicable Laws Related to Controlled Substances

The Government has established that Registrant unlawfully dispensed controlled substances to Patient M.R. The definition of ''dispense'' under the CSA is ''to deliver a controlled substance to an ultimate user . . . pursuant to the lawful order of, a practitioner.'' *Id.* at § 802(10); *see also* 21 CFR 1300.01(a) (''*Prescription means* an order for medication which is dispensed to or for an ultimate user . . . .'').

Factor Four is demonstrated by evidence that a registrant has not complied with laws related to controlled substances, including violations of the CSA, DEA regulations, or other state or local laws regulating the dispensing of controlled substances. The Government's case relies primarily on the actions of Registrant's PIC and co-owner. ''Agency precedent has consistently held that the registration of a pharmacy may be revoked as the result of the unlawful activity of the pharmacy's owners, majority shareholders, officers, managing pharmacist, or other key employee.'' *Perry County Food &Drug,* 80 FR 70084, 70109 (2015) (citing *EZRX, LLC,* 69 FR 63178, 63181 (1988); *Plaza Pharmacy,* 53 FR 36910, 36911 (1988).

Under the CSA, it is ''unlawful for any person knowingly or intentionally to possess a controlled substance unless such substance was obtained directly, or pursuant to a valid prescription or order, from a practitioner, while acting in the course of his professional practice, or except as otherwise authorized by this subchapter.'' 21 U.S.C. 844(a). While PIC Johnson was authorized to order controlled substances for the pharmacy and to possess controlled substances in his capacity as the Registrant's PIC, he was authorized to do so only for the purpose of dispensing the controlled substances to patients ''pursuant to the lawful order of a practitioner,'' in this case, a prescription. 21 U.S.C. 822(b) (''Persons registered by the Attorney General under this subchapter to . . . dispense controlled substances . . . are *authorized to possess . . . distribute, or dispense such substance . . . to the extent authorized by their registration and in conformity with the other provision of this subchapter.*'') (emphasis added); 21 U.S.C. 823(f); *see also ChipRX, L.L.C., d/b/a City Center Pharmacy,* 82 FR 51433, 51437 (2017).

The Government asserts that not only does PIC Johnson's misconduct in dispensing to himself violate 21 U.S.C. 844(a) (unauthorized possession of controlled substances), but that such possession demonstrates the Registrant's violation of § 829(a) and (b) (requiring a prescription to dispense controlled substances). RFAA, at 8. Further, it alleges that the Registrant's conduct violates federal regulations mandating that a pharmacist may dispense scheduled drugs only pursuant to a written prescription signed by the practitioner. 21 CFR 1306.11 (schedule II) and 1306.21 (schedules III–V). *Id.* The evidence shows that Registrant's PIC was diverting narcotic controlled substances from Registrant's pharmacy stock for his own misuse—taking approximately 4–5 oxycodone 30 mg tablets at a time, twice a day. *See* GX 3, at 3. His wife, Registrant's co-owner, also informed the DIs that he would bring home controlled substance pills from Registrant in his pockets, which demonstrated that she had knowledge of Registrant's unlawful activity and permitted it to continue. Although there is substantial evidence that PIC Johnson violated multiple laws in dispensing to himself, these allegations were not noticed in the OSC, and therefore, I am not relying on the violations of law associated with them in my sanction determination.

There is substantial evidence that Registrant violated the recordkeeping requirements of the CSA. Recordkeeping is one of the CSA's principal tools for preventing the diversion of controlled substances. *Grider Drug 1 & Grider Drug 2,* 77 FR 44070, 44100 (citing *Paul H. Volkman,* 73 FR 30630, 30644 (2008)). Under the Act, ''every registrant . . . dispensing a controlled substance or substances shall maintain, on a current basis, a complete and accurate record of each such substance . . . received, sold, delivered, or otherwise disposed of by him.'' 21 U.S.C. 827(a). Further, DEA decisions have explained that ''a registrant's accurate and diligent adherence to [its recordkeeping] obligations is absolutely essential to protect against the diversion of controlled substances.'' *Volkman,* 73 FR at 30644. Here, the Government alleged, in its Order to Show Cause, that an audit conducted by the Diversion Investigators of Registrant showed shortages of more than 10,000 oxycodone 30 mg tablets and more than 11,000 carisoprodol 350 mg tablets. OSC, at 2. In addition, the Government alleged that the audit showed overages for hydrocodone/apap 10/325 and tramadol. *Id.* (citing 21 CFR 1304.03, 1304.04, 1304.11, 1304.21); [19] *see also* GX3, at 2 (DI's Declaration). It is clear from such overages and shortages that Registrant was not maintaining required records.

In addition, as found herein, the Government's evidence substantially indicates that PIC Johnson filled multiple prescriptions for varying dosages of Oxycodone to Patient M.R. on the basis of a single prescription. Registrant filled the single Schedule II oxycodone prescription on more than one occasion in violation of 21 U.S.C. 841(a). Further, it is clear that Registrant did not maintain adequate records regarding its dispensing to Patient M.R.

On the basis of these unrefuted facts I find that Registrant, through its PIC, failed to maintain accurate records of its dispensing activities to M.R., violated federal law in dispensing to M.R. without a valid prescription, and Registrant's inventory overages and shortages further demonstrate violations of federal law and regulations. Such findings weigh against entrusting Registrant with a registration.

[19] Although the OSC alleged that Registrant had also violated 21 CFR 1305.13(e), I found no mention of the underlying violations in the DI Declaration nor in the RFAA, so I am not sustaining that violation. *See* OSC, at 2; GX 3; RFAA. Additionally, I am not sustaining a violation of 21 CFR 1304.22 as alleged in the RFAA, because it was not alleged in the OSC and the Government has not provided me with a basis for considering it.

Factor Five—Such Other Conduct Which May Threaten Public Health and Safety

Although factor five is broad, DEA decisions have qualified its breadth by limiting the considerations made under that factor to those where there is ''a substantial relationship between the conduct and the CSA's purpose of preventing drug abuse and diversion.'' *Zvi H. Perper, M.D.,* 77 FR 64131, 64141 (2012), citing *Tony T. Bui,* 75 FR 49979, 49988 (2010). DEA caselaw has held that registrants who self-abuse controlled substances may endanger public health and safety. *See Tyson D. Quy,* M.D., 78 FR 47412 (2013); *Bui,* 75 FR at 49988; *Kenneth Wayne Green,* Jr., 59 FR 51453 (1994). In particular, PIC Johnson abused oxycodone and amphetamines on two documented occasions, while acting as the Pharmacist-in-Charge at Registrant to such an extent that EMS had to take him to the hospital for a potential overdose. A practitioner, who is under the influence of controlled substances while practicing, places public health and safety in jeopardy. *See Quy,* 78 FR at 47418 (holding that a physician who reported to work at a hospital while under the influence endangered public health and safety, because ''the fact that he was willing to risk such harm is inconsistent with the requirements of a DEA registrant.'').

In this case, Registrant is a corporation, not an individual, but ''misconduct of an entity's principal is properly considered in determining whether to revoke the entity's registration.'' *ChipRX, L.L.C., d/b/a City Center Pharmacy,* 82 FR 51438 (citing *G&O Pharmacy of Paducah,* 68 FR 43752, 43753 (2003). Although PIC Johnson's dispensing to Patient M.R. fortunately did not result in harm to the patient, it demonstrates a dangerous lack of attention to detail and violations of law, which resulted in PIC Johnson filling ''this single prescription three times,[20] providing patient M.R. with three different prescription bottles with various dosage strengths, for a total of 910 oxycodone tablets.'' OSC, at 4. As the Agency has previously held, '' '[c]areless or negligent handling of controlled substances creates the opportunity for diversion and [can] justify' the revocation of an existing registration or the denial of an application for a registration.'' *Lon F. Alexander, M.D.,* 82 FR 49704, 49725 n.43 (2017) (quoting *Paul J. Caragine, Jr.* 63 FR 51592, 51601 (1998)).

[20] As explained herein, he appeared to fill the prescription twice in three bottles.

Additionally, on September 29, 2017, EMS and hospital records demonstrate that PIC Johnson showed signs of drug abuse while operating his vehicle on his way to work. *See* GX 3, Appendix 3, at 4. The hospital records show that he was subsequently arrested for Driving Under the Influence. GX 3, Appendix 2, at 45. Once again, it appears that PIC Johnson was planning to practice as the Pharmacist-in-Charge while dangerously intoxicated, and additionally, he demonstrated an extreme lack of judgment and a reckless disregard for the safety of others by driving his car in such a state.

Summary of Factors Two, Four and Five and Imminent Danger

Having considered all of the factors, I conclude that the evidence pertinent to factors two, four and five demonstrate a *prima facie* showing that Registrant ''has committed such acts as would render [its] registration . . . inconsistent with the public interest.'' 21 U.S.C. 824(a)(4). I further conclude that Registrant has not rebutted the Government's *prima facie* case.

For purposes of the imminent danger inquiry, my findings also lead to the conclusion that Respondent has ''fail[ed] . . . to maintain effective controls against diversion or otherwise comply with the obligations of a registrant'' under the CSA. 21 U.S.C. 824(d)(2). The uncontroverted, substantial evidence that Respondent was severely impaired while working or heading to work, as evidenced by his emergency room treatments for potential overdose three times in the course of three months, establishes that there was ''a substantial likelihood of an immediate threat that death, serious bodily harm, or abuse of a controlled substance . . . [would] occur in the absence of the immediate suspension'' of Registrant's registration. *Id.; see also, ChipRX, L.L.C. d/b/a City Center Pharmacy,* 82 FR 51433, 51439 (2017).

Sanction

Where, as here, the Government has met its *prima facie* burden of showing that Registrant's continued registration is inconsistent with the public interest, the burden shifts to the Registrant to show why it can be entrusted with a registration. *Garrett Howard Smith, M.D.,* 83 FR 18882, 18910 (2018) (collecting cases).

The CSA authorizes the Attorney General to ''promulgate and enforce any rules, regulations, and procedures which he may deem necessary and appropriate for the efficient execution of his functions under this subchapter.'' 21 U.S.C. 871(b). This authority

specifically relates ''to 'registration' and 'control,' and 'for the efficient execution of his functions' under the statute.'' *Gonzales,* 546 U.S. at 259. ''Because 'past performance is the best predictor of future performance, *ALRA Labs, Inc.* v. *Drug Enf't Admin.,* 54 F.3d 450, 452 (7th Cir. 1995), [the Agency] has repeatedly held that where a registrant has committed acts inconsistent with the public interest, the registrant must accept responsibility for [the registrant's] actions and demonstrate that [registrant] will not engage in future misconduct.' '' *Jayam Krishna-Iyer,* 74 FR at 463 (quoting *Medicine Shoppe,* 73 FR 364, 387 (2008)); *see also Jackson,* 72 FR at 23853; *John H. Kennedy, M.D.,* 71 FR 35705, 35709 (2006); *Prince George Daniels, D.D.S.,* 60 FR 62884, 62887 (1995). The issue of trust is necessarily a fact-dependent determination based on the circumstances presented by the individual registrant; therefore, the Agency looks at factors, such as the acceptance of responsibility, and the credibility of that acceptance as it relates to the probability of repeat violations or behavior, and the nature of the misconduct that forms the basis for sanction, while also considering the Agency's interest in deterring similar acts. *See Arvinder Singh, M.D.,* 81 FR 8247, 8248 (2016).

Here the Registrant failed to respond to the Government's Order to Show Cause and Immediate Suspension Order and did not avail itself of the opportunity to refute the Government's case. PIC Johnson did arguably accept responsibility on two occasions, one by admitting to the DI that he was diverting controlled substances, and the other when he admitted to the state investigator that he ''shouldn't have done that.'' GX 3, at 3; GX 4, Appendix 5. However, he also told the DI that ''it would be more dangerous to have a new pharmacist who does not know the community operating [Registrant] tha[n] it would be for [him] to continue operating the Pharmacy notwithstanding his regular diversion, abuse, and impairment.'' GX 3, at 3. This statement undercuts any acceptance of responsibility and also highlights PIC Johnson's lack of judgment in believing that it would benefit the community to have a pharmacist under the influence of controlled substances. Furthermore, because neither PIC Johnson nor anyone else testified nor presented any evidence on behalf of the Registrant in this proceeding, the Registrant has not provided any assurances that it has implemented remedial measures to ensure such conduct is not repeated. Such silence weighs against the Registrant's continued registration. *Zvi H. Perper, M.D.,* 77 FR at 64142 (citing *Medicine Shoppe,* 73 FR at 387); *see also Samuel S. Jackson,* 72 FR at 23853.

Accordingly, I find that the factors weigh in favor of sanction and I shall order the sanctions the Government requested, as contained in the Order below.

Order

Pursuant to 28 CFR 0.100(b) and the authority vested in me by 21 U.S.C. 824(a), I hereby revoke DEA Certificate of Registration No. AB6785161 issued to Brewster Drug, Inc. Further, pursuant to 28 CFR 0.100(b) and the authority vested in me by 21 U.S.C. 823(f), I hereby deny any pending application of Brewster Drug, Inc. to renew or modify this registration, as well as any other pending application of Brewster Drug, Inc. for additional registrations in Washington. Pursuant to the authority vested in me by 21 U.S.C. 824(f), as well as 28 CFR 0.100(b), I further order that all controlled substances seized pursuant to the Order of Immediate Suspension of Registration are forfeited to the United States. This Order is effective May 4, 2020.

Dated: March 13, 2020.

Uttam Dhillon,

Acting Administrator.

[FR Doc. 2020–07017 Filed 4–2–20; 8:45 am]

BILLING CODE 4410–09–P

DEPARTMENT OF JUSTICE

Drug Enforcement Administration

[Docket No. 19–35]

Gregory L. Molden, M.D.; Decision and Order

On June 28, 2019, the Assistant Administrator, Diversion Control Division, Drug Enforcement Administration (hereinafter, DEA or Government), issued an Order to Show Cause (hereinafter, OSC) to Gregory L. Molden, M.D. (hereinafter, Respondent) of New Orleans, Louisiana. OSC, at 1. The OSC proposed the revocation of Respondent's Certificate of Registration No. BM0671481. *Id.* It alleged that Respondent is mandatorily excluded from participation in Medicare, Medicaid, and all Federal health care programs for a minimum period of fifteen years. *Id.* at 1–2 (citing 21 U.S.C. 824(a)(5)). The OSC further alleged that Respondent is without ''authority to practice medicine or handle controlled substances in the State of Louisiana, the state in which [Respondent is] registered with DEA.'' *Id.* at 2 (citing 21 U.S.C. 824(a)(3)).

Specifically, the OSC alleged that on or about September 25, 2018, Respondent was convicted in the United States District Court for the Eastern District of Louisiana on one count of ''Conspiracy to Commit Health Care Fraud,'' in violation of 18 U.S.C. 1349, one count of ''Conspiracy to Pay and Receive Illegal Health Care Kickbacks,'' in violation of 18 U.S.C 371, and eleven counts of ''Health Care Fraud,'' in violation of 18 U.S.C 1347. *Id.* According to the OSC, based on Respondent's conviction, the U.S. Department of Health and Human Services, Office of Inspector General, by letter dated March 29, 2019, mandatorily excluded Respondent from participation in Medicare, Medicaid and all Federal health care programs for a minimum period of fifteen years effective April 18, 2019, pursuant to 42 U.S.C 1320a–7(a). *Id.*

Additionally, the OSC alleged that the Louisiana State Board of Medical Examiners issued an Interim Consent Order for Suspension of Medical License on May 13, 2019. OSC, at 2. This Order, according to the OSC, indefinitely suspended Respondent's Louisiana medical license leaving Respondent without authority to practice medicine or handle controlled substances in Louisiana—the state in which Respondent is registered with DEA. *Id.*

The OSC notified Respondent of the right to either request a hearing on the allegations or submit a written statement in lieu of exercising the right to a hearing, the procedures for electing each option, and the consequences for failing to elect either option. *Id.* at 2–3 (citing 21 CFR 1301.43). The OSC also notified Respondent of the opportunity to submit a corrective action plan. OSC, at 3 (citing 21 U.S.C. 824(c)(2)(C)).

By letter dated August 7, 2019, Respondent timely requested a hearing.[1] Request for Hearing, at 1. According to the Hearing Request, Respondent sought to ''reset/delay'' any action on the OSC for a period of six months to allow Respondent time to appeal his criminal conviction. *Id.* Respondent stated that the criminal conviction, which he was appealing, was the basis for revoking his

[1] The Hearing Request was filed on August 7, 2019. Order Denying Continuance Request and Directing the Filing of Government Evidence Regarding its Lack of State Authority Allegation and Briefing Schedule, at 1. I, thus, find that the Government's service of the OSC was adequate.

Certificate of Registration (hereinafter, DEA registration).[2] *Id.*

The Office of Administrative Law Judges put the matter on the docket and assigned it to Chief Administrative Law Judge John J. Mulrooney, II (hereinafter, Chief ALJ). Order Denying Continuance Request and Directing the Filing of Government Evidence Regarding its Lack of State Authority Allegation and Briefing Schedule dated August 9, 2019 (hereinafter, Briefing Schedule), at 1. In the Briefing Schedule, the Chief ALJ denied the Respondent's request for a continuance [3] and directed the Government to file evidence regarding its lack of state authority allegation. *Id.* The Government timely complied with the Briefing Schedule by filing the Government's Motion for Summary Disposition on August 16, 2019 (hereinafter, Government's Motion or GX). Order Granting the Government's Motion for Summary Disposition, and Recommended Rulings, Findings of Fact, Conclusions of Law, and Decision of the Administrative Law Judge dated August 30, 2019 (hereinafter, Recommended Decision or RD), at 2.

In its motion, the Government argued that there is ''no dispute as to a material fact'' and that ''it is appropriate for the [Chief ALJ] to grant summary disposition.'' GX, at 1. The Government stated that Respondent lacks authority to handle controlled substances in Louisiana, the state in which he is registered with the DEA, because his medical license is suspended. *Id.* at 3. Therefore, the Government argued, DEA does not have statutory authority to maintain Respondent's registration and recommended that Respondent's registration be revoked. *Id.*

Respondent filed ''Molden['s] Response to Government's Motion for Summary Disposition,'' dated August 29, 2019 (hereinafter, Response).[4] Notably, Respondent did not dispute the fact that he lacks state authority to handle controlled substances. Response, at 1 (''The underlying . . . state regulatory decisions in this matter which gives rise to the pending matter is not in dispute . . .''). Instead, Respondent argued that he is appealing his criminal conviction, that therefore his criminal conviction lacks finality, and that without finality the Agency's action is premature. *Id.* at 1–3. Respondent further argued that, as he is detained in a federal prison in Florida, he ''presents no threat to the general public concerning his DEA license.'' *Id.* at 3.

The Chief ALJ granted the Government's Motion finding that ''summary disposition of an administrative case is warranted where, as here, there is no factual dispute of substance.'' RD, at 4 (citing *Veg-Mix, Inc.* v. *U.S. Dep't of Agric.,* 832 F.2d 601, 607 (D.C. Cir. 1987). The Chief ALJ also recommended, ''based upon the Respondent's current lack of state authority, that his DEA registration be revoked, and any pending applications for renewal be denied.'' *Id.* at 5 (emphasis omitted).

The Chief ALJ made no findings on the OSC's mandatory federal program exclusion allegation. *Id.* Instead the Chief ALJ interpreted the Government's Motion as ''convey[ing] [the Government's] preference to have this case forwarded to the Acting Administrator based exclusively on the [loss of state authority allegation [5]] without expending the time and resources required for a full merits hearing.'' *Id.* The Chief ALJ further stated, ''to remove any ambiguity in this regard, to the extent the Government seeks to go forward on its Mandatory Federal Program Exclusion allegation, it may file a request to do so . . . .'' *Id.* at n.5.

By letter dated October 15, 2019, the Chief ALJ certified and transmitted the record to me for final Agency action. The certified record did not include a request from the Government to proceed on the mandatory federal program exclusion allegation. Accordingly, I find that the Government has abandoned the mandatory federal program exclusion allegation. In the October 15, 2019, letter, the Chief ALJ advised that neither party filed exceptions. I find that the time period to file exceptions has expired. *See* 21 CFR 1316.66.

I issue this Decision and Order based on the entire record before me. 21 CFR 1301.46. I make the following findings of fact.

Findings of Fact

Respondent's DEA Registration

Respondent is the holder of DEA Certificate of Registration No. BM0671481 at the registered address of 2300 S Galvez St., New Orleans, LA 70125–3102. GX 1, at 1. Pursuant to this registration, Respondent is authorized to dispense controlled substances in schedules II through V as a practitioner. *Id.* Respondent's registration expires on January 31, 2021, and is ''in an active pending status.'' *Id.*

The Status of Respondent's State License

On May 13, 2019, the Louisiana State Board of Medical Examiners issued an Interim Consent Order for Suspension of Medical License (hereinafter, Suspension of Medical License). GX 3, at 1. According to the Suspension of Medical License, Respondent ''was criminally convicted in the United States District Court for the Eastern District of Louisiana on twelve felony counts related to the practice of medicine.'' *Id.* The Suspension of Medical License also stated that Respondent has reported to prison. *Id.* According to the Suspension of Medical License, Respondent waived his right to notice and formal adjudication of the Louisiana State Board of Medical Examiner's administrative proceedings against him and consented to the Suspension of Medical License. *Id.* at 2.

Therefore, the Louisiana State Board of Medical Examiners ordered that Respondent's license to practice medicine in Louisiana be placed on an indefinite suspension effective on the date of signature, May 13, 2019. *Id.* at 2–3. According to Louisiana's online records, of which I take official notice, Respondent's medical license is still suspended.[6] Louisiana State Board of

[2] The OSC provides that 21 U.S.C. 824(a)(3) and (5) are the grounds for proposing to revoke Respondent's COR, not the criminal conviction. OSC, at 1–2.

[3] The Chief ALJ denied the request for a six-month continuance because ''the Agency has made it clear that a stay in administrative enforcement proceedings is unlikely to ever be justified due to ancillary proceedings involving the Respondent.'' Briefing Schedule, at 2 (internal quotations omitted).

[4] While Respondent did not timely comply with the Briefing Schedule, on August 27, 2019, the Chief ALJ granted a two-day enlargement of time for Respondent to respond. Order Granting Enlargement of Time, at 1. Accordingly, I find that the Response was timely.

[5] In the RD, the Chief ALJ mistakenly typed MFPE. But it is clear from the context that he meant LSA or loss of state authority.

[6] Under the Administrative Procedure Act, an agency ''may take official notice of facts at any stage in a proceeding—even in the final decision.'' United States Department of Justice, Attorney General's Manual on the Administrative Procedure Act 80 (1947) (Wm. W. Gaunt & Sons, Inc., Reprint 1979). Pursuant to 5 U.S.C. 556(e), ''[w]hen an agency decision rests on official notice of a material fact not appearing in the evidence in the record, a party is entitled, on timely request, to an opportunity to show the contrary.'' Accordingly, Respondent may dispute my finding by filing a properly supported motion for reconsideration within fifteen calendar days of the date of this Order. Any such motion shall be filed with the Office of the Administrator and a copy shall be served on the Government. In the event Respondent files a motion, the Government shall have fifteen calendar days to file a response. Any such motion and response may be filed and served by email (*dea.addo.attorneys@dea.usdoj.gov*) or by mail to Office of the Administrator, Attn: ADDO, Drug Enforcement Administration, 8701 Morrissette Drive, Springfield, VA 22152.

Medical Examiners Online Verification, *https://online.lasbme.org/#/verifylicense* (last visited March 13, 2020).

Accordingly, I find that Respondent currently is not licensed to engage in the practice of medicine and, therefore, cannot dispense controlled substances in Louisiana, the state in which Respondent is registered with the DEA (as discussed more fully below).

Discussion

Pursuant to 21 U.S.C. 824(a)(3), the Attorney General is authorized to suspend or revoke a registration issued under section 823 of the Controlled Substances Act (hereinafter, CSA), ''upon a finding that the registrant . . . has had his State license or registration suspended . . . [or] revoked . . . by competent State authority and is no longer authorized by State law to engage in the . . . dispensing of controlled substances.'' With respect to a practitioner, the DEA has also long held that the possession of authority to dispense controlled substances under the laws of the state in which a practitioner engages in professional practice is a fundamental condition for obtaining and maintaining a practitioner's registration. *See, e.g., James L. Hooper, M.D.,* 76 FR 71,371 (2011), *pet. for rev. denied,* 481 Fed. Appx. 826 (4th Cir. 2012); *Frederick Marsh Blanton, M.D.,* 43 FR 27,616, 27,617 (1978).

This rule derives from the text of two provisions of the CSA. First, Congress defined the term ''practitioner'' to mean ''a physician . . . or other person licensed, registered, or otherwise permitted, by . . . the jurisdiction in which he practices . . ., to distribute, dispense, . . . [or] administer . . . a controlled substance in the course of professional practice.'' 21 U.S.C. 802(21). Second, in setting the requirements for obtaining a practitioner's registration, Congress directed that ''[t]he Attorney General shall register practitioners . . . if the applicant is authorized to dispense . . . controlled substances under the laws of the State in which he practices.'' 21 U.S.C. 823(f). Because Congress has clearly mandated that a practitioner possess state authority in order to be deemed a practitioner under the CSA, the DEA has held repeatedly that revocation of a practitioner's registration is the appropriate sanction whenever he is no longer authorized to dispense controlled substances under the laws of the state in which he practices. *See, e.g., James L. Hooper,* 76 FR at 71,371–72; *Sheran Arden Yeates, M.D.,* 71 FR 39,130, 39,131 (2006); *Dominick A. Ricci, M.D.,* 58 FR 51,104, 51,105 (1993); *Bobby Watts, M.D.,* 53 FR 11,919, 11,920 (1988); *Frederick Marsh Blanton,* 43 FR at 27,617.

According to the Suspension of Medical License, Respondent's license as a physician is suspended, and he can no longer engage in the practice of medicine in Louisiana. GX 3, at 2–3. Because Respondent cannot engage in the practice of medicine in Louisiana, he cannot prescribe medicine in Louisiana and therefore cannot ''dispense'' controlled substances under the CSA. 21 U.S.C. 802(10).

Per the Louisiana Medical Practice Act, the ''practice of medicine'' means ''engagement in, the diagnosing, treating, curing, or relieving of any bodily or mental disease, condition, infirmity, deformity, defect, ailment, or injury in any human being, . . . whether by the use of any drug, instrument or force, . . . or any other agency or means; or the examining, . . . of any person or material from any person for such purpose whether such drug, instrument, force, or other agency or means is applied to or used by the patient . . . .'' La. Stat. Ann. § 37:1262(3) (2019). Because Respondent cannot engage in the practice of medicine as defined above, Respondent clearly cannot ''dispense''[7] or ''administer,''[8] as those terms are defined by the CSA, any drugs in the course of his professional practice. 21 U.S.C. 802(10) and (2).

Similarly, because Respondent is not licensed to practice medicine in Louisiana, he is not a ''practitioner'' authorized to write ''prescriptions'' as defined by the Louisiana Pharmacy Practice Act.[9] LA Stat. Ann. §§ 37:1164(45) and (47) (2019). A ''practitioner'' means ''an individual currently licensed, registered, or otherwise authorized by the appropriate licensing board to prescribe and administer drugs in the course of professional practice.'' La. Stat. Ann. § 37:1164(45) (2019). Furthermore, a ''Prescription'' or ''prescription drug order'' means ''an order from a practitioner authorized by law to prescribe for a drug or device that is patient-specific and is communicated by any means to a pharmacist in a permitted pharmacy . . . .'' La. Stat. Ann. § 37:1164(47) (2019). As discussed above, without a Louisiana medical license, Respondent cannot prescribe or dispense controlled substances.

Here, the undisputed evidence in the record is that Respondent's license to practice medicine in Louisiana has been suspended; and therefore, Respondent currently lacks authority to manufacture, distribute, prescribe, or dispense controlled substances in Louisiana. Therefore, Respondent is not eligible to maintain a DEA registration. Accordingly, I will order that Respondent's DEA registration be revoked.

Order

Pursuant to 28 CFR 0.100(b) and the authority vested in me by 21 U.S.C. 824(a), I hereby revoke DEA Certificate of Registration No. BM0671481 issued to Gregory L. Molden. Further, pursuant to 28 CFR 0.100(b) and the authority vested in me by 21 U.S.C. 823(f), I hereby deny any pending application of Gregory L. Molden to renew or modify this registration, as well as any other application of Gregory L. Molden, for additional registration in Louisiana. This Order is effective May 4, 2020.

Dated: March 13, 2020.

Uttam Dhillon,

Acting Administrator.

[FR Doc. 2020–07018 Filed 4–2–20; 8:45 am]

BILLING CODE 4410–09–P

[7] ''Dispense'' under the CSA, ''means to deliver a controlled substance to an ultimate user or research subject by, or pursuant to the lawful order of, a practitioner, including the prescribing and administering of a controlled substance . . . .'' 21 U.S.C. 802(10). Louisiana's use of the words ''treating, curing . . . by drug'' and ''whether such drug is . . . used by the patient'' appears analogous to the CSA's use of ''dispense.'' La. Stat. Ann. § 37:1262(3) (2019).

[8] ''Administer'' under the CSA, ''refers to the direct application of a controlled substance to the body of a patient . . . by . . . a practitioner . . . . .'' 21 U.S.C. 802(2). Louisiana's use of the words ''whether such drug . . . is applied to . . . the patient'' appears analogous to the CSA's use of ''administer.'' La. Stat. Ann. § 37:1262(3) (2019).

[9] According to Louisiana's Board of Pharmacy online records, of which I take official notice, Respondent also does not currently hold a valid controlled dangerous substance license as a practitioner in Louisiana, which is required to prescribe controlled dangerous substances pursuant to La Stat. Ann. § 40:973(A)(1) (2019). Louisiana's Board of Pharmacy License Lookup, *https://secure.pharmacy.la.gov/Lookup/LicenseLookup.aspx* (last visited March 13, 2020). Louisiana's online records show that license Number CDS.017534–MD (license type—CDS License—Physician) assigned to Gregory Louis Molden, M.D., expired on 11/03/2019, and that the current status is ''Lapsed; not valid for practice.'' *Id.* Similarly, license number PMP.006430–CDS assigned to Gregory Louis Molden, M.D., has a current status of ''Lapsed; not valid for practice.'' *Id.*

DEPARTMENT OF JUSTICE

Foreign Claims Settlement Commission

Completion of Claims Adjudication Program

AGENCY: Foreign Claims Settlement Commission of the United States, DOJ.

ACTION: Notice.

SUMMARY: This notice announces the completion date of the claims adjudication program referred to the Foreign Claims Settlement Commission (''Commission'') by the Department of State by letter dated October 7, 2014 (the ''Iraq II program''), involving claims of United States nationals against the Republic of Iraq that were settled under the ''Claims Settlement Agreement Between the Government of the United States of America and the Government of the Republic of Iraq,'' dated September 2, 2010. By prior notice, the Commission announced the commencement of the Iraq II program on October 23, 2014 (79 FR 63439).

DATES: The completion date of the Iraq II program is April 13, 2020.

FOR FURTHER INFORMATION CONTACT: Brian M. Simkin, Chief Counsel, Foreign Claims Settlement Commission of the United States, 441 G St NW, Room 6234, Washington, DC 20579, Tel. (202) 616–6975, FAX (202) 616–6993.

Notice of Completion of Claims Adjudication Program

Pursuant to the authority conferred upon the Secretary of State and the Commission under subsection 4(a)(1)(C) of Title I of the International Claims Settlement Act of 1949 (Pub. L. 455, 81st Cong., approved March 10, 1950, as amended by Public Law 105–277, approved October 21, 1998 (22 U.S.C. 1623(a)(1)(C))), the Foreign Claims Settlement Commission hereby gives notice that on April 13, 2020, the Commission will complete the claims adjudication programs referred to the Commission by the Department of State by letter dated October 7, 2014 (the ''Iraq II program''), involving claims of United States nationals against the Republic of Iraq that were settled under the ''Claims Settlement Agreement Between the Government of the United States of America and the Government of the Republic of Iraq,'' dated September 2, 2010.

Brian M. Simkin,

Chief Counsel.

[FR Doc. 2020–06962 Filed 4–2–20; 8:45 am]

BILLING CODE 4410–BA–P

NATIONAL CREDIT UNION ADMINISTRATION

Agency Information Collection Activities: Proposed Collection; Comment Request

AGENCY: National Credit Union Administration (NCUA).

ACTION: Notice and request for comment.

SUMMARY: The National Credit Union Administration (NCUA), as part of a continuing effort to reduce paperwork and respondent burden, invites the general public and other Federal agencies to comment on the following extensions of a currently approved collection, as required by the Paperwork Reduction Act of 1995.

DATES: Written comments should be received on or before June 2, 2020 to be assured consideration.

ADDRESSES: Interested persons are invited to submit written comments on the information collection to Mackie Malaka, National Credit Union Administration, 1775 Duke Street, Suite 6060, Alexandria, Virginia 22314; Fax No. 703–519–8579; or Email at *PRAComments@NCUA.gov.*

FOR FURTHER INFORMATION CONTACT: Address requests for additional information to Mackie Malaka at the address above or telephone 703–548–2704.

SUPPLEMENTARY INFORMATION:

OMB Number: 3133–0135.

Title: Authorization Agreement for Electronic Funds Transfer Payment.

Type of Review: Extension of a currently approved collection.

Abstract: The NCUA is required under the Debt Collection Improvement Act of 1996 to issue payments to credit unions and all other entities electronically. The ''Authorization Agreement for Electronic Funds Transfer Payment'' form is used to maintain up-to-date and accurate electronic payment data for new and existing credit unions. NCUA will use the information to update its vendor (credit union) electronic routing and transit data database to enable transmittal of funds and payments. If this information is not collected, NCUA will not be able to make payment electronically through the Automated Clearing House (ACH) and will be in non-compliance with the Debt Collection Improvement Act of 1996.

Affected Public: Private Sector: Not-for-profit institutions.

Estimated No. of Respondents: 100.

Estimated No. of Responses per Respondent: 1.

Estimated Total Annual Responses: 100.

Estimated Burden Hours per Response: 15 mins.

Estimated Total Annual Burden Hours: 25.

OMB Number: 3133–0166.

Title: Home Mortgage Disclosure Act (HMDA), 12 CFR 1003 (Reg C).

Type of Review: Extension of a currently approved collection.

Abstract: HMDA was enacted in 1975 and requires most mortgage lenders lending in metropolitan areas to collect data about their housing-related lending activity. The Dodd-Frank Wall Street Reform and Consumer Protection Act of 2010 transferred rulemaking authority for HMDA to the Consumer Financial Protection Bureau (CFPB).

Regulation C, 12 CFR part 1003, requires financial institutions that meet certain thresholds to report data annually about Each application or loan, including the application date; the action taken and the date of that action; the loan amount; the loan type and purpose; and, if the loan is sold, the type of purchaser; Each applicant or borrower, including ethnicity, race, sex, and income; and Each property, including location and occupancy status.

A covered lender generally must update information quarterly, all reportable transaction must be recorded within 30 calendar days after the end of the calendar quarter in which final action is taken on a loan application register (LAR), and must submit the completed LAR annually to the appropriate Federal agency by March 1 of the year following the year covered by the LAR. The Federal Financial Institutions Examination Council (FFIEC) then prepares a disclosure statement from data submitted by the financial institutions, and provides the disclosure statement to the financial institution. Within three business days of receiving its statement, the financial institution must make a copy available at its home office. In addition, within ten business days of receiving its disclosure statement, the financial institution must either: (1) Make the disclosure statement available in at least one branch office in every Metropolitan Statistical Area (MSA) and Metropolitan Division (Division) where it has an office or (2) post a notice in at least one branch office per MSA and Division where it has an office stating that the disclosure statement is available upon written request. A covered lender must make each public disclosure statement available to the public for five years.

Each financial institution must retain its completed LAR for three years and during that period it must make its LAR available to the public after redacting certain information to protect the privacy of its applicants and borrowers.

Affected Public: Private Sector; Not-for-profit institutions.

Estimated No. of Respondents: 1,108.

Estimated No. of Responses per Respondent: 1,172.

Estimated Total Annual Responses: 1,298,105.

Estimated Burden Hours per Response: 5 mins.

Estimated Total Annual Burden Hours: 108,175.

Request for Comments: Comments submitted in response to this notice will be summarized and included in the request for Office of Management and Budget approval. All comments will become a matter of public record. The public is invited to submit comments concerning: (a) Whether the collection of information is necessary for the proper execution of the function of the agency, including whether the information will have practical utility; (b) the accuracy of the agency's estimate of the burden of the collection of information, including the validity of the methodology and assumptions used; (c) ways to enhance the quality, utility, and clarity of the information to be collected; and (d) ways to minimize the burden of the collection of the information on the respondents, including the use of automated collection techniques or other forms of information technology.

By Gerard Poliquin, Secretary of the Board, the National Credit Union Administration, on March 31, 2020.

Dated: March 31, 2020.

Mackie I. Malaka,

NCUA PRA Clearance Officer.

[FR Doc. 2020–07035 Filed 4–2–20; 8:45 am]

BILLING CODE 7535–01–P

NATIONAL SCIENCE FOUNDATION

Request for Information—Interagency Arctic Research Policy Committee, Chaired by the National Science Foundation

AGENCY: National Science Foundation.

ACTION: Request for information.

SUMMARY: The Interagency Arctic Research Policy Committee (IARPC), chaired by the National Science Foundation, seeks public input on the content and organization of the next 5-year Arctic Research Plan: 2022–2026.

DATES: Written comments must be submitted no later than July 2, 2020.

ADDRESSES: Email comments to *IARPCPlan@nsf.gov.* Send written submissions to Roberto Delgado, Office of Polar Programs, National Science Foundation, 2415 Eisenhower Avenue, Alexandria, VA 22314.

FOR FURTHER INFORMATION: Contact Meredith LaValley at 940–733–5675.

SUPPLEMENTARY INFORMATION:

The Interagency Arctic Research Policy Committee (IARPC) is initiating development of the next Arctic Research Plan, as called for in the Arctic Research Policy Act (ARPA) of 1984 (15 U.S.C. 4108). The Plan aims to strengthen interagency communication, coordination, and collaboration of the 14 Federal agencies, departments and offices that make up IARPC. The Plan will address critical needs in Arctic research and identify those areas where research in the Arctic can be improved through interagency collaboration. More information is available at *https://www.iarpccollaborations.org/arctic-research-plan-2022-2026.html.*

About IARPC

IARPC is chartered as a subcommittee under the National Science and Technology Council (NSTC) managed by the Office of Science and Technology Policy (OSTP) in the Executive Office of the President. The Arctic Research Policy Act of 1984 (ARPA) provides for a comprehensive national policy dealing with national research needs and objectives in the Arctic. The ARPA established an Arctic Research Commission (ARC) and an Interagency Arctic Research Policy Committee (IARPC), to implement the Act. IARPC was formally created by Executive Order 12501 and with the Director of the National Science Foundation serving as Chair.

IARPC is charged with enhancing both the scientific monitoring of and research on local, regional, and global environmental issues in the Arctic. To meet the Nation's economic, scientific, and environmental needs, IARPC envisions a prosperous, sustainable and healthy Arctic realized through research coordinated among Federal agencies and domestic and international collaborators.

About the Arctic Research Plan

IARPC is required by law to prepare and execute a 5-year Arctic Research Plan, which helps to coordinate the overall Federal effort in Arctic research. To address the interests and needs of all, IARPC works in partnership with representatives from local communities, Indigenous Peoples, the State of Alaska, the private sector, non-governmental organizations, research institutions, and the academic community. To date, two research Plans have been released and implemented. The current Plan, ''Arctic Research Plan 2017–2021,'' has four policy drivers and nine research goals (see below). The current Plan is being implemented by nine collaboration teams which are co-led by program managers and researchers from IARPC agencies and individuals from the research community and Alaska Native partners.

In September 2019, the IARPC Principals approved the development of the next Arctic Research Plan, covering the period of 2022–2026, with a planned release date at the end of calendar year 2021.

Plans reflect the goals and missions of the Federal agencies supporting research in the Arctic and are developed in coordination with the goals and objectives set out by the Arctic Research Commission. Arctic Research Plans focus on research which will be enhanced through collaboration among Federal agencies. The new Arctic Research Plan will provide a blueprint for effective Federal coordination of Arctic research for the period 2022–2026, positioning the United States to remain a global leader in Arctic research and stewardship for many years to come.

Seeking Input

As called for in the ARPA, IARPC seeks input to ensure that the research interests and needs of all are addressed appropriately in the new Plan. Input is sought from any interested individuals and organizations, and IARPC is committed to an open and equitable engagement process throughout the development of the Plan. A second **Federal Register** Notice, seeking input from interested individuals and organizations, will be posted when a draft of the new Arctic Research Plan is ready in 2021.

IARPC is soliciting input on:

1. Content of the Plan: The critical issues where Federally-funded science and engineering research can provide knowledge to promote good decision-making at all levels related to the Arctic.

2. Organization of the Plan: The structure of the Arctic Research Plan and how it might be updated to better meet and communicate the science needs and plans for the Arctic.

The current Plan ''Arctic Research Plan 2017–2021'' has four policy drivers and nine research goals.

The policy drivers for the Arctic Research Plan FY2017–2021 are:

- Enhance the well-being of Arctic residents;
- Advance stewardship of the Arctic environment;
- Strengthen national and regional security; and
- Improve understanding of the Arctic as a component of planet Earth.

The 9 goals of the Arctic Research Plan FY2017–2021 are:

- Enhance understanding of health determinants and improve the well-being of Arctic residents;
- Advance process and system understanding of the changing Arctic

atmospheric composition and dynamics and the resulting changes to surface energy budgets;

- Enhance understanding and improve predictions of the changing Arctic sea ice cover;
- Increase understanding of the structure and function of Arctic marine ecosystems and their role in the climate system and advance predictive capabilities;
- Understand and project the mass balance of glaciers, ice caps, and the Greenland Ice Sheet, and their consequences for sea level rise;
- Advance understanding of processes controlling permafrost dynamics and the impacts on ecosystems, infrastructure, and climate feedbacks;
- Advance an integrated, landscape-scale understanding of Arctic terrestrial and freshwater ecosystems and the potential for future change;
- Strengthen coastal community resilience and advance stewardship of coastal natural and cultural resources by engaging in research related to the interconnections of people, and natural and built environments; and
- Enhance frameworks for environmental intelligence gathering, interpretation, and application toward decision support.

For the full Arctic Research Plan 2017–2021, see: *https://www.iarpccollaborations.org/download.axd?file=iarpc_arctic_research_plan_2017-2021.pdf*.

For the full Arctic Research Plan 2013–2017, see: *https://www.iarpccollaborations.org/uploads/cms/documents/2013_arctic_research_plan.pdf*.

For details on the conduct of research we aim to support in the new Plan, see the Principles for Conducting Research in the Arctic: *https://www.iarpccollaborations.org/uploads/cms/documents/principles_for_conducting_research_in_the_arctic_final_2018.pdf*.

Dated: March 31, 2020.

Suzanne H. Plimpton,

Reports Clearance Officer, National Science Foundation.

[FR Doc. 2020–07040 Filed 4–2–20; 8:45 am]

BILLING CODE 7555–01–P

NUCLEAR REGULATORY COMMISSION

[Docket No. 99902046 NRC–2020–0088]

Oklo, Inc.; Oklo Power

AGENCY: Nuclear Regulatory Commission.

ACTION: Combined license application; receipt.

SUMMARY: The U.S. Nuclear Regulatory Commission (NRC) is providing public notice of receipt and availability of an application for a combined license from Oklo Power, a subsidiary of Oklo, Inc.

DATES: The application for the combined license was received on March 11, 2020.

ADDRESSES: Please refer to Docket ID NRC–2020–0088 when contacting the NRC about the availability of information regarding this document. You may obtain publicly-available information related to this document using any of the following methods:

- *Federal Rulemaking Website:* Go to *https://www.regulations.gov* and search for Docket ID NRC–2020–0088. Address questions about NRC docket IDs in *Regulations.gov* to Jennifer Borges; telephone: 301–287–9127; email: *Jennifer.Borges@nrc.gov*. For technical questions, contact the individuals listed in the **FOR FURTHER INFORMATION CONTACT** section of this document.
- *NRC's Agencywide Documents Access and Management System (ADAMS):* You may obtain publicly-available documents online in the ADAMS Public Documents collection at *https://www.nrc.gov/reading-rm/adams.html*. To begin the search, select ''Begin Web-based ADAMS Search.'' For problems with ADAMS, please contact the NRC's Public Document Room (PDR) reference staff at 1–800–397–4209, 301–415–4737, or by email to *pdr.resource@nrc.gov*. The application will also be available at *https://www.nrc.gov/reactors/new-reactors/advanced/oklo.html*.
- *NRC's PDR:* You may examine and purchase copies of public documents at the NRC's PDR, Room O1–F21, One White Flint North, 11555 Rockville Pike, Rockville, Maryland 20852.

FOR FURTHER INFORMATION CONTACT: Lucieann Vechioli, Office of Nuclear Reactor Regulation, U.S. Nuclear Regulatory Commission, Washington, DC 20555–0001; telephone: 301–415–6035; email: *Lucieann.Vechioli@nrc.gov*.

SUPPLEMENTARY INFORMATION:

I. Discussion

On March 11, 2020, Oklo Power, a subsidiary of Oklo, Inc. filed with the U.S. Nuclear Regulatory Commission (NRC) pursuant to Section 103 of the Atomic Energy Act and title 10 of the *Code of Federal Regulations* (10 CFR) part 52, ''Licenses, Certifications, and Approvals for Nuclear Power Plants,'' an application for a combined license (COL) for one micro-reactor at the Idaho National Laboratory located in Idaho. The reactor is to be identified as the Aurora.

An applicant may seek a COL in accordance with subpart C of 10 CFR part 52.

The information submitted by the applicant includes certain administrative information such as financial qualifications submitted pursuant to 10 CFR 52.77 as well as technical information submitted pursuant to 10 CFR 52.79.

Subsequent **Federal Register** notices will address the acceptability of the tendered COL application for docketing and provisions for participation of the public in the COL process.

Dated at Rockville, Maryland, this 30th day of March 2020.

For the Nuclear Regulatory Commission.

Lucieann Vechioli Feliciano,

Project Manager, Advanced Reactors Licensing Branch, Division of Advanced Reactors and Non-Power Production and Utilization Facilities, Office of Nuclear Reactor Regulation.

[FR Doc. 2020–06939 Filed 4–2–20; 8:45 am]

BILLING CODE 7590–01–P

POSTAL REGULATORY COMMISSION

[Docket Nos. MC2020–109 and CP2020–115; MC2020–110 and CP2020–116]

New Postal Products

AGENCY: Postal Regulatory Commission.

ACTION: Notice.

SUMMARY: The Commission is noticing a recent Postal Service filing for the Commission's consideration concerning negotiated service agreements. This notice informs the public of the filing, invites public comment, and takes other administrative steps.

DATES: *Comments are due:* April 6, 2020.

ADDRESSES: Submit comments electronically via the Commission's Filing Online system at *http://www.prc.gov*. Those who cannot submit comments electronically should contact the person identified in the **FOR FURTHER INFORMATION CONTACT** section by telephone for advice on filing alternatives.

FOR FURTHER INFORMATION CONTACT: David A. Trissell, General Counsel, at 202–789–6820.

SUPPLEMENTARY INFORMATION:

Table of Contents

I. Introduction
II. Docketed Proceeding(s)

I. Introduction

The Commission gives notice that the Postal Service filed request(s) for the Commission to consider matters related to negotiated service agreement(s). The request(s) may propose the addition or removal of a negotiated service agreement from the market dominant or the competitive product list, or the modification of an existing product currently appearing on the market dominant or the competitive product list.

Section II identifies the docket number(s) associated with each Postal Service request, the title of each Postal Service request, the request's acceptance date, and the authority cited by the Postal Service for each request. For each request, the Commission appoints an officer of the Commission to represent the interests of the general public in the proceeding, pursuant to 39 U.S.C. 505 (Public Representative). Section II also establishes comment deadline(s) pertaining to each request.

The public portions of the Postal Service's request(s) can be accessed via the Commission's website (*http://www.prc.gov*). Non-public portions of the Postal Service's request(s), if any, can be accessed through compliance with the requirements of 39 CFR 3007.301.[1]

The Commission invites comments on whether the Postal Service's request(s) in the captioned docket(s) are consistent with the policies of title 39. For request(s) that the Postal Service states concern market dominant product(s), applicable statutory and regulatory requirements include 39 U.S.C. 3622, 39 U.S.C. 3642, 39 CFR part 3010, and 39 CFR part 3020, subpart B. For request(s) that the Postal Service states concern competitive product(s), applicable statutory and regulatory requirements include 39 U.S.C. 3632, 39 U.S.C. 3633, 39 U.S.C. 3642, 39 CFR part 3015, and 39 CFR part 3020, subpart B. Comment deadline(s) for each request appear in section II.

II. Docketed Proceeding(s)

1. *Docket No(s).:* MC2020–109 and CP2020–115; *Filing Title:* USPS Request to Add Priority Mail Contract 600 to Competitive Product List and Notice of Filing Materials Under Seal; *Filing Acceptance Date:* March 27, 2020; *Filing Authority:* 39 U.S.C. 3642, 39 CFR 3020.30 *et seq.,* and 39 CFR 3015.5; *Public Representative:* Curtis E. Kidd; *Comments Due:* April 6, 2020.

2. *Docket No(s).:* MC2020–110 and CP2020–116; *Filing Title:* USPS Request to Add Priority Mail Contract 601 to Competitive Product List and Notice of Filing Materials Under Seal; *Filing Acceptance Date:* March 27, 2020; *Filing Authority:* 39 U.S.C. 3642, 39 CFR 3020.30 *et seq.,* and 39 CFR 3015.5; *Public Representative:* Curtis E. Kidd; *Comments Due:* April 6, 2020.

This Notice will be published in the **Federal Register**.

Erica A. Barker,

Secretary.

[FR Doc. 2020–06938 Filed 4–2–20; 8:45 am]

BILLING CODE 7710–FW–P

[1] *See* Docket No. RM2018–3, Order Adopting Final Rules Relating to Non-Public Information, June 27, 2018, Attachment A at 19–22 (Order No. 4679).

SECURITIES AND EXCHANGE COMMISSION

[Release No. 34–88515; File No. SR–LTSE–2020–08]

Self-Regulatory Organizations; Long-Term Stock Exchange, Inc.; Notice of Filing and Immediate Effectiveness of Proposed Rule Change Relating to the Pre-Market Session and Regular Market Session Opening Process for Non-LTSE-Primary-Listed Securities

March 30, 2020.

Pursuant to Section 19(b)(1) of the Securities Exchange Act of 1934 (''Act''),[1] and Rule 19b–4 thereunder,[2] notice is hereby given that on March 27, 2020, Long-Term Stock Exchange, Inc. (''LTSE'' or ''Exchange'') filed with the Securities and Exchange Commission (''Commission'') the proposed rule change as described in Items I, II, and III below, which Items have been prepared by the Exchange. The Commission is publishing this notice to solicit comments on the proposed rule change from interested persons.

I. Self-Regulatory Organization's Statement of the Terms of Substance of the Proposed Rule Change

LTSE proposes a rule change to (i) amend how the Pre-Market Session and Regular Market Session Opening Process for Non-LTSE-Primary-Listed Securities will operate, and (ii) make certain non-substantive, technical changes.

The text of the proposed rule change is available at the Exchange's website at *https://longtermstockexchange.com/,* at the principal office of the Exchange, and at the Commission's Public Reference Room.

[1] 15 U.S.C. 78s(b)(1).

[2] 17 CFR 240.19b–4.

II. Self-Regulatory Organization's Statement of the Purpose of, and Statutory Basis for, the Proposed Rule Change

In its filing with the Commission, the self-regulatory organization included statements concerning the purpose of and basis for the proposed rule change and discussed any comments it received on the proposed rule change. The text of these statements may be examined at the places specified in Item IV below. The self-regulatory organization has prepared summaries, set forth in Sections A, B, and C below, of the most significant aspects of such statements.

A. Self-Regulatory Organization's Statement of the Purpose of, and Statutory Basis for, the Proposed Rule Change

1. Purpose

The Exchange proposes to amend LTSE Rules 11.190, 11.220, and 11.231 to revise how its Pre-Market Session and Regular Market Session Opening Process for Non-LTSE-Primary-Listed Securities[3] will operate, and to make certain non-substantive, technical changes. The Exchange has three trading sessions: Pre-Market Session,[4] Regular Market Session,[5] and Post-Market Session.[6]

Existing LTSE Rule 11.190 provides that limit orders with a time-in-force (''TIF'') of DAY or GTX,[7] and market orders with a TIF of DAY,[8] if received prior to the open of the Regular Market Session, are queued in time priority until the open of the Regular Market Session.[9] The Exchange proposes to amend LTSE Rule 11.190(a)(2)(E) to state that market orders may only be submitted during the Regular Market Session and that market orders submitted in the Pre-Market Session or Post-Market Session will be rejected by the System. Specifically, the text of the opening paragraph in proposed LTSE Rule 11.190(a)(2)(E) would be amended to state that that a market order ''[m]ay only be submitted during the Regular

[3] The term ''Non-LTSE-Primary-Listed Security'' refers to: (i) Any UTP Security; and (ii) any Dually-Listed Securities, as provided for in LTSE Rule 14.210, which are not LTSE-Primary-Listed Securities. *See* LTSE Rule 1.160(z).

[4] The term ''Pre-Market Session'' refers to the time between 8:00 a.m. and 9:30 a.m. Eastern Time. *See* LTSE Rule 1.160(dd).

[5] The term ''Regular Market Session'' refers to the time between 9:30 a.m. and 4:00 p.m. Eastern Time. *See* LTSE Rule 1.160(kk).

[6] The term ''Post-Market Session'' refers to the time between 4:00 p.m. and 5:00 p.m. Eastern Time. *See* LTSE Rule 1.160(ee).

[7] *See* LTSE Rule 11.190(a)(1)(E)(ii), (iv).

[8] *See* LTSE 11.190(a)(2)(E)(ii).

[9] Market orders with a TIF of GTX are rejected. *See* LTSE Rule 11.190(a)(2)(E)(iv).

Market Session. Market orders submitted in the Pre-Market Session or Post-Market Session will be rejected by the System.'' [10] In a conforming change to subparagraph (ii) of the rule, the Exchange proposes to remove references to market orders with a TIF of DAY being queued by the System because, as noted in the proposed opening paragraph of LTSE Rule 11.190(a)(2)(E), such orders when submitted in the Pre-Market and Post-Market Session are proposed to be rejected. Thus, the beginning of subparagraph (ii) of the rule would be revised to state that ''Market orders marked DAY are rejected during the Pre-Market Session and Post-Market Session.'' The remainder of subparagraph (ii) of the rule would be deleted, except the last sentence, which is proposed to remain unchanged. This proposed rule text tracks subparagraph (i) of the existing rule for orders marked IOC,[11] because, as noted in LTSE Rule 11.190(a)(2)(E)(ii), market orders marked DAY are treated by the System as having a TIF of IOC.

Proposed LTSE Rule 11.190(d) would be identical to existing LTSE Rule 11.190(d), but for the capitalization of the defined term ''Order Amendment'' in proposed LTSE Rule 11.190(d)(6).[12] The Exchange also proposes to amend existing LTSE Rule 11.190(e) to capitalize the term ''Cancel/Replace.'' In clarifying this approach to the Opening Process, the Exchange also proposes to amend existing LTSE Rule 11.190(f)(1) to eliminate references to Cross Book, which would no longer be used.

Existing LTSE Rule 11.231 provides for an auction-style Opening Match [13] for Non-LTSE-Primary-Listed Securities. The proposed rule change would eliminate the auction-style Opening Match in LTSE Rule 11.231 by deleting all of the existing rule text and replacing it with an opening process modeled on how IEX conducted its opening process when it was approved as a national securities exchange.[14] The proposed rule change would treat limit orders in Non-LTSE-Primary-Listed Securities that are eligible to queue during the Pre-Market Session as incoming orders at the start of the Regular Market Session in their relative time priority, as discussed below. The proposed rule change also would make conforming amendments to LTSE Rule 11.220, as further described below.

Under proposed LTSE Rule 11.231(a), orders for Non-LTSE-Primary-Listed Securities not eligible for trading prior to the commencement of the Regular Market Session that are received and queued during the Pre-Market Session, as described in LTSE Rule 11.190(a), would be queued in the time sequence of their receipt by the System, pursuant to LTSE Rule 11.220(a)(2).[15] Under proposed LTSE Rule 11.231(b), orders queued prior to the Regular Market Session would be able to be modified consistent with LTSE Rule 11.190(d), which establishes the process for amending an order.[16] Further, under proposed LTSE Rule 11.231(b), any modification to an order so queued may result in the time of receipt being updated to the time of receipt of the last modification consistent with the application of a new timestamp, pursuant to proposed LTSE Rule 11.220(a)(2).[17]

Under proposed LTSE Rule 11.231(c), at the commencement of the Regular Hours Trading, orders for Non-LTSE-Primary-Listed Securities queued during the Pre-Market Session would be processed as incoming orders, consistent with LTSE Rules 11.190 and 11.230 in their relative time priority, pursuant to proposed LTSE Rule 11.220(a)(2).[18]

Under proposed LTSE Rule 11.231(d), all messages in Non-LTSE-Primary-Listed Securities that are relevant to the Order Book and are received after the commencement of the Regular Market Session would be processed after the completion of the Regular Market Session Opening Process.[19]

Under proposed LTSE Rule 11.231(e), if a security is subject to a halt, suspension, or pause in trading during the Pre-Market Session, the Exchange would not accept orders for that security for the Regular Market Session Opening Process or otherwise. If the halt, suspension, or pause remains in effect at the time of the Regular Market Session Opening Process, the Opening Process would not occur at the normally scheduled time. Once the security resumes trading, the Exchange would conduct the Regular Market Session Opening Process for any orders in the queue, and would then accept and execute orders as usual in accordance with prevailing market session rules.[20]

The Exchange believes that permitting certain limit orders with a TIF which makes them ineligible to trade during the Pre-Market Session to become part of the Pre-Market Session order queue and to join the Order Book at the commencement of the Regular Market Session is consistent with an orderly and predictable market opening.[21]

Proposed LTSE Rule 11.220(a)(2), which would replace existing LTSE Rule 11.220(a)(2) in its entirety, would require that orders queued for the Regular Market Session Opening Process for Non-LTSE-Primary-Listed Securities be ranked and maintained in time priority. The order established as the oldest in the System [22] would have precedence among those queued for the Opening Process, up to the number of shares of the security specified in the order.[23] Orders would be ranked by the

[10] The opening paragraph of proposed LTSE Rule 11.190(a)(2)(E) would be identical to the opening paragraph of Investors' Exchange LLC (''IEX'') Rule 11.190(a)(2)(E). In this proposed rule change, references to IEX's rules are to the IEX rules as they appeared when IEX was approved as a national securities exchange. *See* IEX Form 1, Exhibit B.

[11] *See* LTSE Rule 11.190(a)(2)(E)(i). IOC stands for Immediate-or-Cancel. *See* LTSE Rule 11.190(c)(1).

[12] *See infra* note 16.

[13] *See* LTSE Rule 11.231(b)(1) (defining ''Opening Match'').

[14] *See* Securities Exchange Act Release No. 78101 (June 17, 2016), 81 FR 41141 (June 23, 2016) (File No. 10–222).

[15] Proposed LTSE Rule 11.231(a) would be identical to IEX Rule 11.231(a), except that proposed LTSE Rule 11.231(a) would clarify that the rule only applies ''for Non-LTSE-Primary-Listed Securities,'' and would cross-reference to LTSE's rules and not IEX's rules.

[16] In what are purely technical changes to Rule 11.190(d), the Exchange proposes to capitalize the defined term ''Order Amendment.'' *See supra* text accompanying note 12.

[17] Proposed LTSE Rule 11.231(b) would be identical to IEX Rule 11.231(b), except that proposed LTSE Rule 11.231(b) would cross-reference to LTSE's rules and not IEX's rules, would clarify that the ''queue'' refers to the ''Pre-Market Session order queue,'' and would not incorporate IEX Rule 11.231(b)(1) because the Exchange does not route orders.

[18] Proposed LTSE Rule 11.231(c) would be identical to IEX Rule 11.231(c), except that proposed LTSE Rule 11.231(c) would cross-reference to LTSE's rules and not IEX's rules, would clarify that the ''queue'' refers to the ''Pre-Market Session order queue,'' and the phrase ''Non-LTSE-Primary-Listed Securities'' is proposed to be added to reflect the scope of the proposed rule.

[19] Proposed LTSE Rule 11.231(d) would be identical to IEX Rule 11.231(d), except the phrase ''Non-LTSE-Primary-Listed Securities'' is proposed to be added to reflect the scope of the proposed rule.

[20] Proposed LTSE Rule 11.231(e) would be identical to IEX Rule 11.231(e), except that proposed LTSE Rule 11.231(e) would clarify that the ''queue'' refers to the ''Pre-Market Session order queue,'' and would add the phrase ''that security for'' in the first sentence to clarify the scope of a halt, suspension, or pause in trading.

[21] The Exchange notes that this method was used by IEX when it was approved as national securities exchange. *See supra* note 14.

[22] The term ''System'' refers to the electronic communications and trading facility designated by the Board through which securities orders of Members are consolidated for ranking and execution. *See* LTSE Rule 1.160(rr).

[23] Proposed LTSE Rule 11.220(a)(2) would be identical to the opening paragraph of IEX Rule 11.220(a)(2) and IEX Rule 11.220(a)(2)(A), except that proposed LTSE Rule 11.220(a)(2) would: (1) Use the phrase ''Regular Market Session Opening Process for Non-LTSE-Primary-Listed Securities'' instead of simply the term ''Opening Process'' for clarity; (2) not include the word ''clearly'' before ''established'' because the word ''clearly'' is superfluous; and (3) use the term ''security'' instead of ''stock'' because the Exchange believes the term

time at which they are submitted to the Pre-Market Session order queue, the first in the queue being the oldest submitted. Orders would maintain their time priority once queued unless an amendment to the order is submitted by the User by means of a Cancel/Replace pursuant to LTSE Rule 11.190(d), except in the event that the only change to the order is a decrease in share quantity, in which case the order would not receive a new timestamp.[24]

To illustrate how the proposed Opening Process would operate, consider the following example where the Order Book prior to the start of Regular Market Session is as follows: [25]

Bid				Offer			
Order	TIF	Time	Price	Order	TIF	Time	Price
A	SYS	9:15	10	B	SYS	9:15	10.05
C	SYS	9:25	9.97	D	SYS	9:29	10.07

And the Pre-Market Session queue is as follows:

Order	TIF	Time in Queue	Price	Type
E	DAY	8:15	10.02	Bid.
F	DAY	8:17	10.05	Bid.
G	DAY	8:19	10.04	Offer.
H	DAY	9:28	10.07	Offer.

The Order Book at the start of the Regular Market Session would be as follows, as each of the orders in the Pre-Market Session queue are treated as incoming orders in relative time priority (and for illustrative purposes only, the time to drain each order in the queue is 1 millisecond):

Bid				Offer			
Order	TIF	Time	Price	Order	TIF	Time	Price
E	DAY	9:30:00001	10.02	G	DAY	9:30:00003	10.04
A	SYS	9:15	10	D	SYS	9:29	10.07
C	SYS	9:25	9.97	H	DAY	9:30:00004	10.07

Note that Orders F and B are gone; that is because incoming Order F would have executed against resting Order B.

As described in proposed LTSE Rule 11.231(d), all messages in Non-LTSE-Primary-Listed Securities relevant to the Order Book received after the commencement of the Regular Market Session would be processed after the completion of the Regular Market Session Opening Process. Orders received during the Regular Market Session would become part of the Order Book only after the Pre-Market Session queue is completed. For example, if the following orders are received at the start Regular Market Session:

Order	TIF	Time in Queue	Price	Type
I	DAY	9:30:0001	10.03	Offer.
J	DAY	9:30:0002	10	Bid.

Then the Order Book would be as follows:

Bid				Offer			
Order	TIF	Time	Price	Order	TIF	Time	Price
E	DAY	9:30:00001	10.02	I	DAY	9:30:0001	10.03
A	SYS	9:15	10	G	DAY	9:30:00003	10.04
J	DAY	9:30:0002	10	D	SYS	9:29	10.07
C	SYS	9:25	9.97	H	DAY	9:30:00004	10.07

''security'' more appropriately describes what is intended.

[24] Proposed LTSE Rule 11.220(a)(2) would not include references to routable orders, see IEX Rule 11.220(a)(2)(A)(ii), because the Exchange does route orders. *See also supra* note 17.

[25] For purposes of these examples, all orders are limit orders for 100 shares.

The preceding example illustrates how the proposed Opening Process would operate solely for orders in Non-LTSE-Primary-Listed Securities. The Exchange has a different opening process for LTSE-Primary-Listed Securities in Rule 11.350, which would remain unchanged.

2. Statutory Basis

The Exchange believes that the proposed rule change is consistent with the provisions of Section 6 of the Act,[26] in general, and furthers the objectives of Section 6(b)(5) of the Act,[27] in particular, in that it is designed to prevent fraudulent and manipulative acts and practices, promote just and equitable principles of trade, to foster cooperation and coordination with persons engaged in facilitating transactions in securities, to remove impediments to and perfect the mechanism of a free and open market and a national market system and, in general, to protect investors and the public interest.

Specifically, the Exchange believes that the proposed rule change is consistent with fostering cooperation and coordination with persons engaged in facilitating transactions in securities. The simplicity and determinism of this Opening Process for Non-LTSE-Primary-Listed Securities will facilitate trading of NMS stocks without imposing burdens on market participants to adapt to, or adopt, another opening cross methodology for securities where the Exchange is not the primary listing market. The Exchange also believes that the streamlined approach of the proposed rule change to commencing trading in the Regular Market Session removes impediments to and perfects the mechanism of a free and open market and a national market system by providing a clear and transparent process designed to provide a means for trading in a Non-LTSE-Primary-Listed Security to open in an orderly and timely manner.

In addition, the Exchange also believes that rejecting market orders with a TIF of DAY received during the Pre-Market Session will provide for a more orderly Opening Process and protect investors and the public interest. The Exchange believes that market orders marked DAY, which are treated as having a TIF of IOC, should be treated in the same way as market orders marked IOC, which are rejected.[28]

The Exchange further believes that the proposed rule change aligns with the philosophy and principles of the Very Simple Market or VSM™ in that its relatively simple and deterministic model aims to reduce the complexity of the trading process on the Exchange, while acknowledging that alternatives employed by other exchanges and trading venues are part of a dynamic and vibrant national market system. The Exchange also believes that the proposed rule change is consistent with the protection of investors and the public interest in that it would be applied fairly and equitably across all market participants, while also providing for orderly and timely openings for Non-LTSE-Primary-Listed Securities.

B. Self-Regulatory Organization's Statement on Burden on Competition

LTSE does not believe that the proposed rule change will impose any burden on competition that is not necessary or appropriate in furtherance of the purposes of the Act. The Exchange believes that the proposed Opening Process for Non-LTSE-Primary-Listed Securities is designed to promote fair competition among brokers and dealers and exchanges by offering an alternative Opening Process, thereby promoting intermarket competition between exchanges in furtherance of the principles of Section 11A(a)(1) of the Act.[29]

With respect to intramarket competition, the proposed Opening Process would apply equally to all non-LTSE-Primary-Listed Securities, and all Members and market participants that send orders to LTSE through Members in the Pre-Market Session. As described above, Members are permitted to enter orders for the Pre-Market Session queue, and all orders received are maintained in time priority. Consequently, LTSE does not believe that the proposed rule change would impose any burden on intramarket competition that is not necessary or appropriate in furtherance of the purposes of the Act.

C. Self-Regulatory Organization's Statement on Comments on the Proposed Rule Change Received from Members, Participants, or Others

Written comments were neither solicited nor received.

III. Date of Effectiveness of the Proposed Rule Change and Timing for Commission Action

Because the foregoing proposed rule change does not: (i) Significantly affect the protection of investors or the public interest; (ii) impose any significant burden on competition; and (iii) become operative for 30 days from the date on which it was filed, or such shorter time as the Commission may designate, it has become effective pursuant to Section 19(b)(3)(A)(iii) of the Act[30] and subparagraph (f)(6) of Rule 19b–4 thereunder.[31]

At any time within 60 days of the filing of such proposed rule change, the Commission summarily may temporarily suspend such rule change if it appears to the Commission that such action is necessary or appropriate in the public interest, for the protection of investors, or otherwise in furtherance of the purposes of the Act. If the Commission takes such action, the Commission shall institute proceedings to determine whether the proposed rule should be approved or disapproved.

IV. Solicitation of Comments

Interested persons are invited to submit written data, views, and arguments concerning the foregoing, including whether the proposed rule change is consistent with the Act. Comments may be submitted by any of the following methods:

Electronic Comments

- Use the Commission's internet comment form (*http://www.sec.gov/rules/sro.shtml*); or
- Send an email to *rule-comments@sec.gov.* Please include File Number SR–LTSE–2020–08 on the subject line.

Paper Comments

- Send paper comments in triplicate to Secretary, Securities and Exchange Commission, 100 F Street NE, Washington, DC 20549–1090.

All submissions should refer to File Number SR–LTSE–2020–08. This file number should be included on the subject line if email is used. To help the Commission process and review your comments more efficiently, please use only one method. The Commission will post all comments on the Commission's internet website (*http://www.sec.gov/rules/sro.shtml*). Copies of the submission, all subsequent amendments, all written statements with respect to the proposed rule change that are filed with the

[26] 15 U.S.C. 78f.

[27] 15 U.S.C. 78f(b)(5).

[28] *See* LTSE Rule 11.190(a)(2)(E)(ii).

[29] 15 U.S.C. 78k–1(a)(1).

[30] 15 U.S.C. 78s(b)(3)(A)(iii).

[31] 17 CFR 240.19b–4(f)(6). In addition, Rule 19b–4(f)(6) requires the Exchange to give the Commission written notice of its intent to file the proposed rule change, along with a brief description and text of the proposed rule change, at least five business days prior to the date of filing of the proposed rule change, or such shorter time as designated by the Commission. The Exchange has satisfied this requirement.

Commission, and all written communications relating to the proposed rule change between the Commission and any person, other than those that may be withheld from the public in accordance with the provisions of 5 U.S.C. 552, will be available for website viewing and printing in the Commission's Public Reference Room, 100 F Street NE, Washington, DC 20549, on official business days between the hours of 10:00 a.m. and 3:00 p.m. Copies of the filing also will be available for inspection and copying at the principal office of the Exchange. All comments received will be posted without change. Persons submitting comments are cautioned that we do not redact or edit personal identifying information from comment submissions. You should submit only information that you wish to make available publicly. All submissions should refer to File Number SR–LTSE–2020–08, and should be submitted on or before April 24, 2020.

For the Commission, by the Division of Trading and Markets, pursuant to delegated authority.[32]

J. Matthew DeLesDernier,

Assistant Secretary.

[FR Doc. 2020–06958 Filed 4–2–20; 8:45 am]

BILLING CODE 8011–01–P

[32] 17 CFR 200.30–3(a)(12).

SECURITIES AND EXCHANGE COMMISSION

[Release No. 34–88514; File No. SR–NSCC–2020–007]

Self-Regulatory Organizations; National Securities Clearing Corporation; Notice of Filing and Immediate Effectiveness of a Proposed Rule Change To Revise the Clearing Agency Investment Policy

March 30, 2020

Pursuant to Section 19(b)(1) of the Securities Exchange Act of 1934 (''Act'')[1] and Rule 19b–4 thereunder,[2] notice is hereby given that on March 26, 2020, National Securities Clearing Corporation (''NSCC'') filed with the Securities and Exchange Commission (''Commission'') the proposed rule change as described in Items I, II and III below, which Items have been prepared by the clearing agency. NSCC filed the proposed rule change pursuant to Section 19(b)(3)(A) of the Act[3] and Rule 19b–4(f)(6) thereunder.[4] The Commission is publishing this notice to solicit comments on the proposed rule change from interested persons.

[1] 15 U.S.C. 78s(b)(1).

[2] 17 CFR 240.19b–4.

[3] 15 U.S.C. 78s(b)(3)(A).

[4] 17 CFR 240.19b–4(f)(6).

I. Clearing Agency's Statement of the Terms of Substance of the Proposed Rule Change

The proposed rule change would revise the Clearing Agency Investment Policy (''Investment Policy'') of NSCC and its affiliates, The Depository Trust Company (''DTC'') and Fixed Income Clearing Corporation (''FICC,'' and together with DTC and NSCC, the ''Clearing Agencies'') in order to (1) include the proceeds of the issuance of term debt by NSCC as part of the description of ''Default Liquidity Funds'' within the section for ''Investable Funds''; (2) clarify the allowable investments for DTC's Participants Fund;[5] and (3) enhance the description of collateral that may be posted in connection with investments in reverse repurchase agreements; as described in greater detail below.

II. Clearing Agency's Statement of the Purpose of, and Statutory Basis for, the Proposed Rule Change

In its filing with the Commission, the clearing agency included statements concerning the purpose of and basis for the proposed rule change and discussed any comments it received on the proposed rule change. The text of these statements may be examined at the places specified in Item IV below. The clearing agency has prepared summaries, set forth in sections A, B, and C below, of the most significant aspects of such statements.

(A) Clearing Agency's Statement of the Purpose of, and Statutory Basis for, the Proposed Rule Change

1. Purpose

The Clearing Agencies are proposing to revise the Investment Policy, which was adopted for each clearing agency in December 2016[6] and is maintained in compliance with Rule 17Ad–22(e)(16) under the Act,[7] in order to (1) include the proceeds of the issuance of term debt by NSCC as part of the description of ''Default Liquidity Funds'' within the section for ''Investable Funds''; (2) clarify the allowable investments for DTC's Participants Fund; and (3) enhance the description of collateral that may be posted in connection with investments in reverse repurchase agreements; as described in greater detail below.

Overview of the Investment Policy

The Investment Policy governs the management, custody and investment of cash deposited to the respective NSCC and FICC Clearing Funds, and the DTC Participants Fund, the proprietary liquid net assets (cash and cash equivalents) of the Clearing Agencies, and other funds held by the Clearing Agencies pursuant to their respective rules.

The Investment Policy identifies the guiding principles for investments and defines the roles and responsibilities of DTCC staff in administering the Investment Policy pursuant to those principles. The Investment Policy is co-owned by DTCC's Treasury group (''Treasury'')[8] and the Counterparty Credit Risk team (''CCR'') within DTCC's Group Chief Risk Office (''GCRO'').[9] Treasury is responsible for identifying potential counterparties to investment transactions, establishing and managing investment relationships with approved investment counterparties, and making and monitoring all investment transactions with respect to the Clearing Agencies. CCR is responsible for conducting a credit review of any potential counterparty, updating those reviews on a quarterly basis, and establishing an investment limit for each counterparty.

The Investment Policy also identifies sources of funds that may be invested, and the permitted investments of those funds, including the authority required to make such investments and the parameters of, and limitations on, each type of investment. Allowable investments include bank deposits, reverse repurchase agreements, direct obligations of the U.S. government,

[5] The respective Clearing Funds of NSCC and FICC, and the DTC Participants Fund are described in the Rules & Procedures of NSCC (''NSCC Rules''), the DTC Rules, By-laws and Organization Certificate (''DTC Rules''), the Clearing Rules of the Mortgage-Backed Securities Division of FICC (''MBSD Rules'') and the Rulebook of the Government Securities Division of FICC (''GSD Rules''), respectively, *available at http://dtcc.com/legal/rules-and-procedures. See* Rule 4 (Clearing Fund) of the NSCC Rules, Rule 4 (Participants Fund and Participants Investment) of the DTC Rules, Rule 4 (Clearing Fund and Loss Allocation) of the GSD Rules and Rule 4 (Clearing Fund and Loss Allocation) of the MBSD Rules.

[6] *See* Securities Exchange Act Release No. 79528 (December 12, 2016), 81 FR 91232 (December 16, 2016) (SR–DTC–2016–007, SR–FICC–2016–005, SR–NSCC–2016–003).

[7] 17 CFR 240.17Ad–22(e)(16). As discussed in this filing, the Investment Policy also addresses compliance with the requirements of the Rule 17Ad–22(e)(3). 17 CFR 240.17Ad–22(e)(3).

[8] Treasury is a part of the DTCC Finance Department and is responsible for the safeguarding, investment and disbursement of funds on behalf of the Clearing Agencies and in accordance with the principles outlined in the Investment Policy.

[9] Among other responsibilities, GCRO is generally responsible for the systems and processes designed to identify and manage credit, market and liquidity risks to the Clearing Agencies.

money market mutual funds, high-grade corporate debt, and hedge transactions. Finally, the Investment Policy defines the approval authority required to exceed established investment limits.

Proposed Revisions to the Investment Policy

The Investment Policy is reviewed and approved by the Boards annually. In connection with the most recent annual review of the Investment Policy and in order to reflect recent changes to NSCC's default liquidity funds, the Clearing Agencies have decided to propose certain revisions and updates. These proposed revisions, described in greater detail below, are designed to update the Investment Policy and help ensure that it reflects the Clearing Agencies' practices related to investments of funds.

1. Include Additional NSCC Default Liquidity in Table of Investable Funds

First, the Clearing Agencies are proposing to amend the table of investable funds in Section 5 of the Investment Policy to include proceeds from the issuance of term debt by NSCC in the description of NSCC's default liquidity funds.

This table identifies the sources of investable funds that are invested by the Clearing Agencies, and groups these sources of funds into separate categories. One of the categories of investable funds is the default liquidity funds of NSCC, which is currently described as including the proceeds from the issuance of commercial paper and extendible notes. NSCC recently proposed to raise additional prefunded default liquidity through the periodic issuance and private placement of term debt.[10] The investment of these funds would be governed by the Investment Policy.

The proposed change to the Investment Policy would include proceeds from the issuance of term debt in this category of ''Investable Funds'' to reflect the recent effectiveness of NSCC's proposal.[11]

2. Clarify Allowable Investments for DTC's Participants Fund

Second, the Clearing Agencies are proposing to make two revisions to the Investment Policy to clarify how DTC's Participants Fund may be invested. It has historically been DTC's practice to invest its Participants Fund in cash deposit accounts only, so that the funds are available for same-day access and settlement.

The Clearing Agencies are proposing to update the Investment Policy to more clearly reflect this practice. First, the Clearing Agencies are proposing to amend the table of allowable investments in Section 6.1 of the Investment Policy to include a separate column to identify the DTC Participants Fund, and show these funds as being available for investment only in bank deposits, including DTC's cash deposit account at the Federal Reserve Bank of New York. Currently, the DTC Participants Fund is included in the same column as the NSCC and FICC Clearing Funds, which may also be invested in other investment types. Therefore, as currently written, this table indicates that DTC's Participants Fund may also be invested in those other investment types. The proposed change to create a separate column for DTC's Participants Fund would more clearly identify the allowable investments of these funds.

Also, the Clearing Agencies are proposing to amend Section 6.2.1 of the Investment Policy, which describes the limits on investments in bank deposits, to explicitly state that DTC's Participants Fund may only be invested in demand deposit, savings or checking bank accounts that provide same day access to funds. This proposed change would clearly identify the limits on investments of DTC's Participants Fund in certain types of bank deposits.

The proposed changes would improve the Investment Policy by more clearly identifying DTC's practice with respect to the investment of its Participants Fund deposits.

3. Enhance Description of Collateral Related to Reverse Repurchase Agreements

Finally, the Clearing Agencies are proposing to amend Section 6.2.2 of the Investment Policy, which describes investment limits on investments in reverse repurchase agreements. The proposed changes would include additional detail to more clearly describe the collateral that may be posted by a counterparty in connection with these investments and to identify the required haircuts on such collateral.

More specifically, in these arrangements, where the Clearing Agencies are the purchaser of securities, the counterparty to the transaction delivers to the custodian collateral (either securities or cash). Currently, the Investment Policy states that securities posted as collateral must have a market value equal to 102% or greater of the cash invested. The proposed changes to the Investment Policy would further state that U.S. Treasury securities, U.S. agency securities and agency mortgage-backed securities posted as collateral must have a two percent haircut; and cash posted as collateral shall have no haircut, because cash does not carry any associated market risk that could lead to a change in collateral value.

The proposed changes would improve the Investment Policy by more clearly describing the limits applicable to these types of investments.

2. Statutory Basis

The Clearing Agencies believe that the proposed rule changes are consistent with the requirements of the Act and the rules and regulations thereunder applicable to a registered clearing agency. In particular, the Clearing Agencies believe that the proposed modifications to the Investment Policy are consistent with Section 17A(b)(3)(F) of the Act[12] and Rule 17Ad–22(e)(16) under the Act,[13] for the reasons described below.

Section 17A(b)(3)(F) of the Act requires, in part, that the rules of each of the Clearing Agencies be designed to assure the safeguarding of securities and funds which are in the custody or control of each of the Clearing Agencies or for which they are responsible.[14] The investment guidelines and governance procedures set forth in the Investment Policy are designed to safeguard funds which are in the custody or control of the Clearing Agencies or for which they are responsible. Such protections include, for example, following a prudent and conservative investment philosophy that places the highest priority on maximizing liquidity and risk avoidance. The Clearing Agencies believe each of these proposed changes would help facilitate the effective execution of the Investment Policy pursuant to the guiding principles set forth therein. Therefore, the Clearing Agencies believe the proposed changes would allow the Clearing Agencies to continue to operate the Investment Policy pursuant to a prudent and conservative investment philosophy that assures the safeguarding of securities and funds which are in their custody and control, or for which they are responsible.

First, the proposed change to include proceeds from NSCC's issuance of term debt in the table of ''Investable Funds'' would make investments of these funds subject to the guidelines and restrictions set forth in the Investment Policy, and,

[10] *See* Securities Exchange Act Release No. 88146 (February 7, 2020), 85 FR 8046 (February 12, 2020) (SR–NSCC–2019–802).

[11] *Id.*

[12] 15 U.S.C. 78q–1(b)(3)(F).

[13] 17 CFR 240.17Ad–22(e)(16).

[14] 15 U.S.C. 78q–1(b)(3)(F).

therefore, would assure the safeguarding of these funds.

Second, the proposed changes to clarify the allowable investments for DTC's Participants Fund and enhance the description of restrictions applicable to investments in reverse repurchase agreements would improve the clarity and accuracy of the Investment Policy. By creating clearer descriptions, the Clearing Agencies believe these proposed changes would make the Investment Policy more effective in governing the management, custody, and investment of funds of and held by the Clearing Agencies.

For the reasons described above, the Clearing Agencies believe the proposed changes would improve the effectiveness of the Investment Policy and allow the Investment Policy to continue to be administered in alignment with the investment guidelines and governance procedures set forth therein. Given that such guidelines and governance procedures are designed to safeguard funds which are in the custody or control of the Clearing Agencies or for which they are responsible, the Clearing Agencies believe the proposed changes are consistent with the requirements of Section 17A(b)(3)(F) of the Act.[15]

Rule 17Ad–22(e)(16) under the Act requires the Clearing Agencies to establish, implement, maintain and enforce written policies and procedures reasonably designed to safeguard the Clearing Agencies' own and their participants' assets, minimize the risk of loss and delay in access to these assets, and invest such assets in instruments with minimal credit, market, and liquidity risks.[16]

The Clearing Agencies believe that the Investment Policy follows a prudent and conservative investment philosophy, placing the highest priority on maximizing liquidity and avoiding risk of loss, by requiring the segregation of funds of each Clearing Agency and of types of funds of each Clearing Agency, using external credit ratings in the evaluation of counterparties, and establishing investment limits by counterparty as well as investment type. As originally implemented, the Investment Policy was designed to meet the requirements of Rule 17Ad–22(e)(16) under the Act.[17]

For the reasons stated above, the Clearing Agencies believe that each of the proposed revisions would improve the clarity and comprehensiveness of the Investment Policy and, therefore, make the Investment Policy more effective in governing the management, custody, and investment of funds of and held by the Clearing Agencies. In this way, the proposed changes would better allow the Clearing Agencies to maintain this document in a way that is designed to meet the requirements of Rule 17Ad–22(e)(16). Therefore, the Clearing Agencies believe the proposed revisions would be consistent with the requirements of Rule 17Ad–22(e)(16) under the Act.[18]

(B) Clearing Agency's Statement on Burden on Competition

Each of the Clearing Agencies believes that none of the proposed revisions to the Investment Policy would have any impact, or impose any burden, on competition. The Investment Policy applies equally to allowable investments of FICC and NSCC Clearing Funds and DTC Participants Fund deposits, as applicable, of each member of the Clearing Agencies, and establishes a uniform policy at the Clearing Agencies. The proposed changes to the Investment Policy would not affect any changes on the fundamental purpose or operation of this document and, as such, would also not have any impact, or impose any burden, on competition.

(C) Clearing Agency's Statement on Comments on the Proposed Rule Change Received From Members, Participants, or Others

The Clearing Agencies have not solicited or received any written comments relating to this proposal. The Clearing Agencies will notify the Commission of any written comments received by the Clearing Agencies.

III. Date of Effectiveness of the Proposed Rule Change, and Timing for Commission Action

Because the foregoing proposed rule change does not:

(i) Significantly affect the protection of investors or the public interest;

(ii) impose any significant burden on competition; and

(iii) become operative for 30 days from the date on which it was filed, or such shorter time as the Commission may designate, it has become effective pursuant to Section 19(b)(3)(A) of the Act[19] and Rule 19b–4(f)(6) thereunder.[20]

At any time within 60 days of the filing of the proposed rule change, the Commission summarily may temporarily suspend such rule change if it appears to the Commission that such action is necessary or appropriate in the public interest, for the protection of investors, or otherwise in furtherance of the purposes of the Act. If the Commission takes such action, the Commission shall institute proceedings to determine whether the proposed rule should be approved or disapproved.

IV. Solicitation of Comments

Interested persons are invited to submit written data, views and arguments concerning the foregoing, including whether the proposed rule change is consistent with the Act. Comments may be submitted by any of the following methods:

Electronic Comments

- Use the Commission's internet comment form (*http://www.sec.gov/rules/sro.shtml*); or
- Send an email to *rule-comments@sec.gov.* Please include File Number SR–NSCC–2020–007 on the subject line.

Paper Comments

- Send paper comments in triplicate to Secretary, Securities and Exchange Commission, 100 F Street NE, Washington, DC 20549.

All submissions should refer to File Number SR–NSCC–2020–007. This file number should be included on the subject line if email is used. To help the Commission process and review your comments more efficiently, please use only one method. The Commission will post all comments on the Commission's internet website (*http://www.sec.gov/rules/sro.shtml*). Copies of the submission, all subsequent amendments, all written statements with respect to the proposed rule change that are filed with the Commission, and all written communications relating to the proposed rule change between the Commission and any person, other than those that may be withheld from the public in accordance with the provisions of 5 U.S.C. 552, will be available for website viewing and printing in the Commission's Public Reference Room, 100 F Street, NE, Washington, DC 20549 on official business days between the hours of

[15] *Id.*

[16] When the Investment Policy was implemented, the Clearing Agencies were subject to the requirements of subsection (d) of Rule 17Ad–22 under the Act, and the Investment Policy was designed to meet the requirements of Rule 17Ad–22(d)(3). *See supra* note 6; 17 CFR 240.17Ad–22(d). The Commission subsequently adopted Rule 17Ad–22(e) and amended Rule 17Ad–22(d) such that the Clearing Agencies became subject to the new requirements of Rule 17Ad–22(e) and are no longer subject to the requirements of Rule 17Ad–22(d). 17 CFR 240.17Ad–22(e).

[17] *Id.*

[18] 17 CFR 240.17Ad–22(e)(16).

[19] 15 U.S.C. 78s(b)(3)(A).

[20] 17 CFR 240.19b–4(f)(6).

10:00 a.m. and 3:00 p.m. Copies of the filing also will be available for inspection and copying at the principal office of NSCC and on DTCC's website (*http://dtcc.com/legal/sec-rule-filings.aspx*). All comments received will be posted without change. Persons submitting comments are cautioned that we do not redact or edit personal identifying information from comment submissions. You should submit only information that you wish to make available publicly. All submissions should refer to File Number SR–NSCC–2020–007 and should be submitted on or before April 24, 2020.

For the Commission, by the Division of Trading and Markets, pursuant to delegated authority.[21]

J. Matthew DeLesDernier,

Assistant Secretary.

[FR Doc. 2020–06957 Filed 4–2–20; 8:45 am]

BILLING CODE 8011–01–P

SECURITIES AND EXCHANGE COMMISSION

[Release No. 34–88511; File No. SR–OCC–2020–002]

Self-Regulatory Organizations; The Options Clearing Corporation; Notice of Filing and Immediate Effectiveness of Proposed Rule Change To Update The Options Clearing Corporation's Operational Loss Fee in OCC's Schedule of Fees

March 30, 2020.

Pursuant to Section 19(b)(1) of the Securities Exchange Act of 1934 (''Exchange Act'' or ''Act''),[1] and Rule 19b–4 thereunder,[2] notice is hereby given that on March 24, 2020, the Options Clearing Corporation (''OCC'') filed with the Securities and Exchange Commission (''SEC'' or ''Commission'') the proposed rule change as described in Items I, II, and III below, which Items have been prepared by OCC. OCC filed the proposed rule change pursuant to Section 19(b)(3)(A)(ii)[3] of the Act and Rule 19b–4(f)(2)[4] thereunder so that the proposal was effective upon filing with the Commission.[5] The Commission is publishing this notice to solicit comments on the proposed rule change from interested persons.

I. Clearing Agency's Statement of the Terms of Substance of the Proposed Rule Change

The proposed rule change by OCC would revise OCC's schedule of fees, effective April 8, 2020, to implement a change in the maximum contingent Operational Loss Fee in accordance with OCC's Capital Management Policy. Proposed changes to OCC's schedule of fees are attached [sic] as Exhibit 5 to the filing. Material proposed to be added to OCC's schedule of fees as currently in effect is underlined and material proposed to be deleted is marked in strikethrough text. All capitalized terms not defined herein have the same meaning as set forth in the OCC By-Laws and Rules.[6]

II. Clearing Agency's Statement of the Purpose of, and Statutory Basis for, the Proposed Rule Change

In its filing with the Commission, OCC included statements concerning the purpose of and basis for the proposed rule change and discussed any comments it received on the proposed rule change. The text of these statements may be examined at the places specified in Item IV below. OCC has prepared summaries, set forth in sections (A), (B), and (C) below, of the most significant aspects of these statements.

(A) Clearing Agency's Statement of the Purpose of, and Statutory Basis for, the Proposed Rule Change

(1) Purpose

The purpose of this proposed rule change is to revise OCC's schedule of fees to update the maximum aggregate Operational Loss Fee that OCC would charge Clearing Members in equal shares in the unlikely event that OCC's shareholders' equity (''Equity'') falls below certain thresholds defined in OCC's Capital Management Policy. The proposed fee change is designed to enable OCC to replenish capital to comply with Rule 17Ad–22(e)(15) under the Exchange Act, which requires OCC, in pertinent part, to ''hold[] liquid net assets funded by equity to the greater of either (x) six months . . . current operating expenses, or (y) the amount determined by the board of directors to be sufficient to ensure a recovery or orderly wind-down of critical operations and service''[7] and ''[m]aintain[] a viable plan, approved by the board of directors and updated at least annually, for raising additional equity should its equity fall close to or below the amount required [to be held].''[8]

On January 24, 2020, the SEC approved OCC's Capital Management Policy, which includes OCC's replenishment plan.[9] Pursuant to that policy, OCC would charge an Operational Loss Fee in equal shares to Clearing Members to raise additional capital should OCC's Equity fall below certain defined thresholds.[10] Specifically, after applying the unvested balance held in respect of OCC's Executive Deferred Compensation Program, OCC would charge an Operational Loss Fee in an amount to raise Equity to 110% of OCC's Target Capital Requirement, up to the maximum Operational Loss Fee identified in OCC's schedule of fees less the amount of any Operational Loss Fees previously charged and not refunded.[11] OCC calculates the maximum aggregate Operational Loss Fee based on the amount determined by the Board of Directors to be sufficient for a recovery or orderly wind-down of critical operations and services (''RWD Amount''),[12] which is determined based on the assumptions in OCC's Recovery and Orderly Wind-Down Plan (''RWD Plan'').[13] In order to account for OCC's tax liability for retaining the Operational Loss Fee as earnings, OCC may apply a tax gross-up to the RWD Amount (''Adjusted RWD Amount'') depending on whether the operational loss that caused OCC's Equity to fall below the Trigger Event thresholds is tax deductible.[14]

The RWD Amount and, in turn, the Adjusted RWD Amount are determined annually based on OCC's corporate budget, the assumptions articulated in

[21] 17 CFR 200.30–3(a)(12).

[1] 15 U.S.C. 78s(b)(1).

[2] 17 CFR 240.19b–4.

[3] 15 U.S.C. 78s(b)(3)(A)(ii).

[4] 17 CFR 240.19b–4(f)(2).

[5] As noted below, the proposed change would not become effective until the later of April 8, 2020 or the date on which the change is deemed certified under the Commodity Futures Trading Commission's (''CFTC'') Regulation 40.6.

[6] OCC's By-Laws and Rules can be found on OCC's public website: *http://optionsclearing.com/about/publications/bylaws.jsp*.

[7] *See* 17 CFR 240.17Ad–22(e)(15)(ii).

[8] *See* 17 CFR 240.17Ad–22(e)(15)(iii).

[9] *See* Exchange Act Release No. 88029 (Jan. 24, 2020), 85 FR 5500 (Jan. 30, 2020) (SR–OCC–2019–007) (''Order Approving OCC's Capital Management Policy'').

[10] *Id.* at 5503. OCC would charge an Operational Loss Fee for a Trigger Event, which the Capital Management Policy defines as when OCC's Equity falls below 90% of OCC's Target Capital Requirement (*i.e.,* the amount of Equity determined by OCC's Board to be sufficient for OCC to meet its regulatory obligations and to serve market participants and the public interest) or remains below the Target Capital Requirement for ninety consecutive calendar days. *See id.* at 5510. OCC's Schedule of Fees currently lists these threshold amounts with respect to OCC's current Target Capital Requirement. This proposed rule change does not implement any change to the Target Capital Requirement or the corresponding threshold amounts.

[11] *Id.* at 5503.

[12] *Id.*

[13] *See* Exchange Act Release No. 83918 (Aug. 23, 2018), 83 FR 44091, 44094 (Aug. 29, 2018) (SR–OCC–2017–021) (''Order Approving OCC's RWD Plan'').

[14] Order Approving OCC's Capital Management Policy, 85 FR at 5503.

the RWD Plan,[15] and OCC's projected effective tax rate.[16] The current Operational Loss Fee listed in OCC's schedule of fees is the Adjusted RWD Amount calculated based on OCC's 2019 corporate budget. Budgeted operating expenses in 2020 are lower than the 2019 budgeted operating expenses. This proposed rule change would revise the maximum Operational Loss Fee to reflect the Adjusted RWD Amount based on OCC's 2020 budget,[17] as follows:

Current fee schedule	Proposed fee schedule
$154,666,667.00 less the aggregate amount of Operational Loss Fees previously charged and not refunded as of the date calculated, divided by the number of Clearing Members at the time charge.	$141,866,667.00 less the aggregate amount of Operational Loss Fees previously charged and not refunded as of the date calculated, divided by the number of Clearing Members at the time charge.

Since the allocation of the Operational Loss Fee is a function of the number of Clearing Members at the time of the charge, the maximum Operational Loss Fee per Clearing Member is subject to fluctuation during the course of the year. However, if the proposed Operational Loss Fee were charged to 106 Clearing Members, the number of Clearing Members as of December 31, 2019 for example, the maximum Operational Loss Fee per Clearing Member would be $1,338,365.

(2) Statutory Basis

OCC believes the proposed rule change is consistent with the Act [18] and the rules and regulations thereunder. In particular, OCC believes that the proposed fee change is also consistent with Section 17A(b)(3)(D) of the Act,[19] which requires that the rules of a clearing agency provide for the equitable allocation of reasonable dues, fees, and other charges among its participants. OCC believes that the proposed fee change is reasonable because it is designed to replenish OCC's Equity in the form of liquid net assets in the event that OCC's Equity falls close to or below its Target Capital Requirement so that OCC can continue to meet its obligations as a systemically important financial market utility (''SIFMU'') to Clearing Members and the general public should an operational losses materialize (including through a recovery or orderly wind-down of critical operations and services) and thereby facilitate compliance with Rule 17Ad–22(e)(15)(iii).[20] The maximum Operational Loss Fee is sized to ensure that OCC maintains sufficient liquid net assets to support its RWD Plan and imposes a contingent obligation on Clearing Members that is approximately the same amount as a Clearing Member's contingent obligation for Clearing Fund assessments for a Clearing Member operating at the minimum Clearing Fund deposit.[21] Therefore, OCC believes the proposed maximum Operational Loss Fee sized to OCC's Adjusted RWD Amount is reasonable.

OCC also believes that the proposed Operational Loss Fee would result in an equitable allocation of fees among its participants because it would be equally applicable to all Clearing Members. As the Commission has recognized, OCC's designation as a SIFMU and its role as the sole covered clearing agency for all listed options contracts in the U.S. makes it an integral part of the national system for clearance and settlement, through which ''Clearing Members, their customers, investors, and the markets as a whole derive significant benefit . . . regardless of their specific utilization of that system.'' [22] Neither the SEC nor OCC has observed any correlation between measures of Clearing Member utilization or OCC's benefit to Clearing Members [23] and its risk of operational loss.[24] As a result, OCC believes that the proposed change to OCC's fee schedule provides for the equitable allocation of reasonable fees in accordance with Section 17A(b)(3)(D) of the Act.[25]

In addition, OCC believes that the proposed rule change is consistent with Rule 17Ad–22(e)(15)(iii), which requires that OCC establish, implement, maintain and enforce written policies and procedures reasonably designed to identify, monitor, and manage OCC's general business risk, including by maintaining a viable plan, approved by the Board and updated at least annually, for raising additional equity should its equity fall close to or below the amount required under Rule 17Ad–22(e)(15)(ii).[26] While Rule 17Ad–22(e)(15)(iii) does not by its terms specify the amount of additional equity a clearing agency's plan for replenishment capital must be designed to raise, the SEC's adopting release states that ''a viable plan generally should enable the covered clearing agency to hold sufficient liquid net assets to achieve recovery or orderly wind-down.'' [27] OCC sets the maximum Operational Loss Fee at an amount sufficient to raise, on a post-tax basis, the amount determined annually by the Board to be sufficient to ensure recovery or orderly wind-down pursuant to the RWD Plan.[28] Therefore, OCC believes the proposed change to OCC's schedule of fees is consistent with Rule 17Ad–22(e)(15)(iii) and the guidance provided by the SEC in the adopting release.

OCC also believes that the proposed fee change is consistent with Section 19(g)(1) of the Act,[29] which, among

[15] The RWD Plan states OCC's basic assumptions concerning the resolution process, including assumptions about the duration of the resolution process, the cost of the resolution process, OCC's capitalization through the resolution process, the maintenance of Critical Services and Critical Support Functions, as defined by the RWD Plan, and the retention of personnel and contractual relationships. *See* Order Approving OCC's RWD Plan, 83 FR at 44094.

[16] *See* Order Approving OCC's Capital Management Policy, 85 FR at 5501 n.20, 5503.

[17] Confidential data and analysis evidencing the calculation of the Adjusted RWD Amount based on OCC's 2020 corporate budget is included in Exhibit 3 to the rule filing.

[18] 15 U.S.C. 78a *et seq.*

[19] 15 U.S.C. 78q–1(b)(3)(D).

[20] 17 CFR 240.17Ad–22(e)(15)(iii).

[21] A Clearing Member operating at the minimum Clearing Fund deposit ($500,000) could be assessed up to an additional $1 million (the minimum deposit, assessed up to two times), for a total contingent obligation of $1.5 million. *See* OCC Rule 1006(h).

[22] *See* Order Approving OCC's Capital Management Policy, 85 FR at 5506.

[23] *Id.* (''The Commission is not aware of evidence demonstrating that those benefits are tied directly or positively correlated to an individual Clearing Member's rate of utilization of OCC's clearance and settlement services.'')

[24] *Id.* (rejecting an objection to the equal allocation of the proposed Operational Loss Fee based on the SEC's regulatory experience and OCC's analyses of Clearing Member utilization (*e.g.,* contract volume) or credit risk (*e.g.,* Clearing Fund size) and the various operational and general business risks that could trigger an Operational Loss Fee). To date, OCC has observed no correlation between Clearing Member utilization or credit risk and OCC's potential risk of operational loss. *See* Confidential Exhibit 3.

[25] 15 U.S.C. 78q–1(b)(3)(D).

[26] 17 CFR 240.17Ad–22(e)(15)(iii).

[27] Standards for Covered Clearing Agencies, Exchange Act Release No. 78961 (Sept. 28, 2016), 81 FR 70786, 70836 (Oct. 13, 2016) (File No. S7–03–14).

[28] *See* Order Approving OCC's Capital Management Policy, 85 FR at 5510 (''The Operational Loss Fee would be sized to the Adjusted RWD Amount, and therefore would be designed to provide OCC with at least enough capital either to continue as a going concern or to wind-down in an orderly fashion.'')

[29] 15 U.S.C. 78s(g)(1).

other things, requires every self-regulatory organization to comply with its own rules. OCC filed its Capital Management Policy as a ''proposed rule change'' within the meaning of Section 19(b) of the Act,[30] and Rule 19b–4 under the Act.[31] The Capital Management Policy specifies that the maximum Operational Loss Fee shall be the Adjusted RWD Amount.[32] Because the Adjusted RWD Amount will change annually based, in part, on OCC's corporate budget, fee filings will be necessary to ensure that the maximum Operational Loss Fee in OCC's schedule of fees remains consistent with the amount identified in the Capital Management Policy. Therefore, OCC believes that the proposed change to OCC's fee schedule is consistent with Section 19(g)(1) of the Act.

The proposed rule change is not inconsistent with the existing rules of OCC, including any other rules proposed to be amended.

(B) Clearing Agency's Statement on Burden on Competition

Section 17A(b)(3)(I) of the Act[33] requires that the rules of a clearing agency not impose any burden on competition not necessary or appropriate in furtherance of the purposes of the Act. OCC does not believe that the proposed rule change would have any impact or impose a burden on competition. Although the proposed Operational Loss Fee affects Clearing Members, their customers, and the markets that OCC serves, OCC believes that the proposed rule change would not disadvantage or favor any particular user of OCC's services in relationship to another user because the proposed Operational Loss Fee would apply equally to all Clearing Members. In addition, OCC does not believe that the proposed Operational Loss Fee imposes a significant burden on smaller firms because the maximum Operational Loss Fee imposes a contingent obligation on Clearing Members that is approximately the same amount as a Clearing Member's contingent obligation for Clearing Fund assessments for a Clearing Member operating at the minimum Clearing Fund deposit.[34] Moreover, the proposed rule change would lower the maximum contingent obligation, which would be a benefit to all Clearing Members. Accordingly, OCC does not believe that the proposed rule change would have any impact or impose a burden on competition.

(C) Clearing Agency's Statement on Comments on the Proposed Rule Change Received From Members, Participants or Others

Written comments on the proposed rule change were not and are not intended to be solicited with respect to the proposed rule change and none have been received.

III. Date of Effectiveness of the Proposed Rule Change and Timing for Commission Action

Pursuant to Section 19(b)(3)(A)(ii)[35] of the Act, and Rule 19b–4(f)(2) thereunder,[36] the proposed rule change is filed for immediate effectiveness as it constitutes a change in fees charged to OCC Clearing Members. At any time within 60 days of the filing of the proposed rule change, the Commission summarily may temporarily suspend such rule change if it appears to the Commission that such action is necessary or appropriate in the public interest, for the protection of investors, or otherwise in furtherance of the purposes of the Act. The proposal shall not take effect until all regulatory actions required with respect to the proposal are completed.[37]

IV. Solicitation of Comments

Interested persons are invited to submit written data, views and arguments concerning the foregoing, including whether the proposed rule change is consistent with the Act. Comments may be submitted by any of the following methods:

Electronic Comments

- Use the Commission's internet comment form (*http://www.sec.gov/rules/sro.shtml*); or
- Send an email to *rule-comments@sec.gov.* Please include File Number SR–OCC–2020–002 on the subject line.

Paper Comments

- Send paper comments in triplicate to Secretary, Securities and Exchange Commission, 100 F Street NE, Washington, DC 20549–1090.

All submissions should refer to File Number SR–OCC–2020–002. This file number should be included on the subject line if email is used. To help the Commission process and review your comments more efficiently, please use only one method. The Commission will post all comments on the Commission's internet website (*http://www.sec.gov/rules/sro.shtml*). Copies of the submission, all subsequent amendments, all written statements with respect to the proposed rule change that are filed with the Commission, and all written communications relating to the proposed rule change between the Commission and any person, other than those that may be withheld from the public in accordance with the provisions of 5 U.S.C. 552, will be available for website viewing and printing in the Commission's Public Reference Room, 100 F Street NE, Washington, DC 20549, on official business days between the hours of 10:00 a.m. and 3:00 p.m. Copies of such filing also will be available for inspection and copying at the principal office of OCC.

All comments received will be posted without change. Persons submitting comments are cautioned that we do not redact or edit personal identifying information from comment submissions. You should submit only information that you wish to make available publicly.

All submissions should refer to File Number SR–OCC–2020–002 and should be submitted on or before April 24, 2020.

For the Commission, by the Division of Trading and Markets, pursuant to delegated authority.[38]

J. Matthew DeLesDernier,

Assistant Secretary.

[FR Doc. 2020–06954 Filed 4–2–20; 8:45 am]

BILLING CODE 8011–01–P

[30] 15 U.S.C. 78s(b).

[31] 17 CFR 240.19b–4.

[32] Order Approving OCC's Capital Management Policy, 85 FR at 5503.

[33] 15 U.S.C. 78q–1(b)(3)(I).

[34] *See* note 18, *supra.*

[35] 15 U.S.C. 78s(b)(3)(A)(ii).

[36] 17 CFR 240.19b–4(f)(2).

[37] Notwithstanding its immediate effectiveness, implementation of this rule change will be delayed until this change is deemed certified under CFTC Regulation 40.6.

[38] 17 CFR 200.30–3(a)(12).

SECURITIES AND EXCHANGE COMMISSION

[Release No. 34–88516; File No. SR–NASDAQ–2020–007]

Self-Regulatory Organizations; The Nasdaq Stock Market LLC; Notice of Filing of Amendment No. 1 and Order Granting Accelerated Approval of a Proposed Rule Change, as Modified by Amendment No. 1, To Assume Operational Responsibility for Certain Enforcement Functions Currently Performed by FINRA Under the Exchanges Authority and Supervision

March 30, 2020.

I. Introduction

On February 3, 2020, The Nasdaq Stock Market LLC (''Exchange'' or ''Nasdaq'') filed with the Securities and

Exchange Commission (''Commission''), pursuant to Section 19(b)(1) of the Securities Exchange Act of 1934 (''Act'') [1] and Rule 19b–4 thereunder,[2] a proposed rule change to assume operational responsibility for certain enforcement functions currently performed by the Financial Industry Regulatory Authority (''FINRA'') under the Exchange's authority and supervision. The proposed rule change was published for comment in the **Federal Register** on February 20, 2020.[3] On March 24, 2020, the Exchange filed Amendment No. 1 to the proposed rule change, which amended and replaced the proposed rule change.[4] The Commission did not receive any comment letters on the proposed rule change. The Commission is publishing this notice to solicit comments on Amendment No. 1 from interested persons, and is approving the proposed rule change, as modified by Amendment No. 1, on an accelerated basis.

II. Description of the Proposal

According to the Exchange, since it became a national securities exchange, the Exchange has contracted with FINRA through various regulatory services agreements to perform certain regulatory functions on its behalf.[5] At the same time, the Exchange retained operational responsibility for a number of regulatory functions, including real-time surveillance, qualification of companies listed on the Exchange, and most surveillance related to its affiliated options markets.[6] In April 2019, the Exchange reallocated operational responsibility from FINRA to Nasdaq Regulation for certain investigative and enforcement activity, including the investigation and enforcement responsibilities for conduct occurring on The Nasdaq Options Market,[7] and investigation and enforcement responsibilities for conduct occurring on Nasdaq's equity market only, *i.e.,* not also on non-Nasdaq-affiliated equities markets.[8] According to the Exchange, notwithstanding the changes made in April 2019, FINRA continues to perform certain functions pursuant to an RSA,[9] including the handling of contested disciplinary proceedings arising out of Nasdaq Regulation-led investigation and enforcement activities.

The Exchange now proposes to reallocate operational responsibility from FINRA to Nasdaq Regulation for certain enforcement activity, specifically, the handling of certain contested disciplinary proceedings.[10] The Exchange states that it anticipates handling those contested disciplinary proceedings that FINRA is unable or unwilling to handle due to strained resources or other similar limitations.[11] Furthermore, the Exchange states that in all cases, the Exchange will continue to use FINRA's Office of Hearing Officers to administer the hearing process, and that the rules applicable to the disciplinary process will remain the same.[12]

III. Discussion and Commission Findings

After careful review, the Commission finds that the proposed rule change, as modified by Amendment No. 1, is consistent with the requirements of the Act and the rules and regulations thereunder applicable to a national securities exchange [13] and, in particular, with Sections 6(b)(5) and 6(b)(7) of the Act.[14] As noted above, since it became a national securities exchange, the Exchange has contracted with FINRA through various regulatory services agreements to perform certain regulatory functions on its behalf.[15] Nasdaq General Rule 1, Section 7 requires that, unless Nasdaq obtains prior Commission approval, the regulatory functions subject to the regulatory services agreement in effect at the time when Nasdaq began to operate a national securities exchange must at all times continue to be performed by FINRA or an affiliate thereof or by another independent self-regulatory organization. The Exchange now proposes to reallocate operational responsibility for the certain contested disciplinary activities discussed above from FINRA to Nasdaq Regulation.[16]

The Commission believes that the Exchange could leverage its knowledge of its markets and members, its experience with investigation and enforcement work, and its surveillance, investigation, and enforcement staff, in helping to effectively, efficiently, and with immediacy, litigate certain contested disciplinary proceeds.[17] The Commission also notes that, as discussed above, the proposal would not change or alter in any way the disciplinary process around how contested matters are handled, and FINRA's Office of Hearing Officers will continue to administer the hearing process for all contested disciplinary proceedings.[18] Furthermore, as the Exchange states, by assuming operational responsibility for certain contested disciplinary proceedings, the Exchange may be able to deliver increased efficiencies in the regulation of its markets and to act promptly and provide more effective regulation by enabling timely and more efficient action.[19] Accordingly, the Commission believes that the proposed rule change, as modified by Amendment No. 1, is consistent with the Act.

IV. Solicitation of Comments on Amendment No. 1 to the Proposed Rule Change

Interested persons are invited to submit written data, views, and arguments concerning whether Amendment No. 1 is consistent with the Act. Comments may be submitted by any of the following methods:

Electronic Comments

- Use the Commission's internet comment form (*http://www.sec.gov/rules/sro.shtml*); or
- Send an email to *rule-comments@sec.gov*. Please include File Number SR–NASDAQ–2020–007 on the subject line.

[1] 15 U.S.C. 78s(b)(1).

[2] 17 CFR 240.19b–4.

[3] *See* Securities Exchange Act Release No. 88209 (February 13, 2020), 85 FR 9870.

[4] In Amendment No. 1, the Exchange: (1) Clarified that the Exchange itself, not a third-party, would be assuming operational responsibility for certain contested disciplinary matters; (2) clarified that FINRA's Office of Hearing Officers would continue to administer the hearing process for all contested disciplinary matters; and (3) made other technical, clarifying, and conforming changes. Amendment No. 1 is available at *https://www.sec.gov/comments/sr-nasdaq-2020-007/srnasdaq2020007-6990674-214688.pdf.*

[5] *See* Amendment No. 1, *supra* note 4 at 4.

[6] *See id.*

[7] According to the Exchange, as appropriate, Nasdaq Regulation coordinates with other SROs to the extent it is investigating activity occurring on non-Nasdaq options markets to ensure no regulatory duplication occurs.

[8] Securities Exchange Act Release No. 85505 (April 3, 2019), 84 FR 14170 (April 9, 2019).

[9] In addition to work performed pursuant to a RSA, FINRA also performs work for matters covered by agreements to allocate regulatory responsibility under Rule 17d–2 of the Act.

[10] *See* Amendment No. 1, *supra* note 4, at 6. The Exchange states that Nasdaq Regulation's decision to assume operational responsibility for any given contested disciplinary proceeding with be made on a case by case basis. *See* Amendment No. 1, *supra* note 4, at 6, fn.13. Furthermore, the Exchange states that for those contested disciplinary proceedings that Nasdaq Regulation does not assume operational responsibility for, the Exchange will continue to use FINRA to litigate those matters. *See* Amendment No. 1, *supra* note 4, at 6.

[11] *See* Amendment No. 1, *supra* note 4, at 6.

[12] *See* Amendment No. 1, *supra* note 4, at 6, fn.12; 7.

[13] In approving this proposed rule change, the Commission has considered the proposed rule's impact on efficiency, competition, and capital formation. *See* 15 U.S.C. 78c(f).

[14] 15 U.S.C. 78f(b)(5), (7).

[15] *See supra* note 5 and accompanying text.

[16] *See supra* notes 10 and 11 and accompanying text.

[17] *See* Amendment No. 1, *supra* note 4, at 7.

[18] *See id.*

[19] *See* Amendment No. 1, *supra* note 4, at 7, 9.

Paper Comments

- Send paper comments in triplicate to Secretary, Securities and Exchange Commission, 100 F Street NE, Washington, DC 20549–1090.

All submissions should refer to File Number SR–NASDAQ–2020–007. This file number should be included on the subject line if email is used. To help the Commission process and review your comments more efficiently, please use only one method. The Commission will post all comments on the Commission's internet website (*http://www.sec.gov/rules/sro.shtml*). Copies of the submission, all subsequent amendments, all written statements with respect to the proposed rule change that are filed with the Commission, and all written communications relating to the proposed rule change between the Commission and any person, other than those that may be withheld from the public in accordance with the provisions of 5 U.S.C. 552, will be available for website viewing and printing in the Commission's Public Reference Room, 100 F Street NE, Washington, DC 20549, on official business days between the hours of 10:00 a.m. and 3:00 p.m. Copies of the filing also will be available for inspection and copying at the principal office of the Exchange. All comments received will be posted without change. Persons submitting comments are cautioned that we do not redact or edit personal identifying information from comment submissions. You should submit only information that you wish to make available publicly. All submissions should refer to File Number SR–NASDAQ–2020–007 and should be submitted on or before April 24, 2020.

V. Accelerated Approval of Proposed Rule Change, as Modified by Amendment No. 1

The Commission finds good cause to approve the proposed rule change, as modified by Amendment No. 1, prior to the thirtieth day after the date of publication of notice of the filing of Amendment No. 1 in the **Federal Register**. The Commission notes that, in Amendment No. 1, the Exchange provided additional information to clarify and support the proposal, and did not materially change the substance of the proposal. The Commission also notes that the original proposal was subject to a 21-day comment period and no comments were received. Accordingly, the Commission finds good cause, pursuant to Section 19(b)(2) of the Act,[20] to approve the proposed rule change, as modified by Amendment No. 1, on an accelerated basis.

VI. Conclusion

It is therefore ordered, pursuant to Section 19(b)(2) of the Act,[21] that the proposed rule change (SR–NASDAQ–2020–007), as modified by Amendment No. 1 be, and hereby is, approved on an accelerated basis.

For the Commission, by the Division of Trading and Markets, pursuant to delegated authority.[22]

J. Matthew DeLesDernier,

Assistant Secretary.

[FR Doc. 2020–06959 Filed 4–2–20; 8:45 am]

BILLING CODE 8011–01–P

[20] 15 U.S.C. 78s(b)(2).

[21] *Id.*

[22] 17 CFR 200.30–3(a)(12).

SECURITIES AND EXCHANGE COMMISSION

[Release No. 34–88512; File No. SR–FICC–2020–003]

Self-Regulatory Organizations; Fixed Income Clearing Corporation; Notice of Filing and Immediate Effectiveness of a Proposed Rule Change To Revise the Clearing Agency Investment Policy

March 30, 2020.

Pursuant to Section 19(b)(1) of the Securities Exchange Act of 1934 (''Act'') [1] and Rule 19b–4 thereunder,[2] notice is hereby given that on March 26, 2020, Fixed Income Clearing Corporation (''FICC'') filed with the Securities and Exchange Commission (''Commission'') the proposed rule change as described in Items I, II and III below, which Items have been prepared by the clearing agency. FICC filed the proposed rule change pursuant to Section 19(b)(3)(A) of the Act [3] and Rule 19b–4(f)(6) thereunder.[4] The Commission is publishing this notice to solicit comments on the proposed rule change from interested persons.

I. Clearing Agency's Statement of the Terms of Substance of the Proposed Rule Change

The proposed rule change would revise the Clearing Agency Investment Policy (''Investment Policy'') of FICC and its affiliates, The Depository Trust Company (''DTC'') and National Securities Clearing Corporation (''NSCC,'' and together with DTC and FICC, the ''Clearing Agencies'') in order to (1) include the proceeds of the issuance of term debt by NSCC as part of the description of ''Default Liquidity Funds'' within the section for ''Investable Funds''; (2) clarify the allowable investments for DTC's Participants Fund; [5] and (3) enhance the description of collateral that may be posted in connection with investments in reverse repurchase agreements; as described in greater detail below.

II. Clearing Agency's Statement of the Purpose of, and Statutory Basis for, the Proposed Rule Change

In its filing with the Commission, the clearing agency included statements concerning the purpose of and basis for the proposed rule change and discussed any comments it received on the proposed rule change. The text of these statements may be examined at the places specified in Item IV below. The clearing agency has prepared summaries, set forth in sections A, B, and C below, of the most significant aspects of such statements.

(A) Clearing Agency's Statement of the Purpose of, and Statutory Basis for, the Proposed Rule Change

1. Purpose

The Clearing Agencies are proposing to revise the Investment Policy, which was adopted for each clearing agency in December 2016 [6] and is maintained in compliance with Rule 17Ad–22(e)(16) under the Act,[7] in order to (1) include the proceeds of the issuance of term debt by NSCC as part of the description of ''Default Liquidity Funds'' within the section for ''Investable Funds''; (2) clarify the allowable investments for DTC's Participants Fund; and (3) enhance the description of collateral that may be posted in connection with investments in reverse repurchase

[1] 15 U.S.C. 78s(b)(1).

[2] 17 CFR 240.19b–4.

[3] 15 U.S.C. 78s(b)(3)(A).

[4] 17 CFR 240.19b–4(f)(6).

[5] The respective Clearing Funds of NSCC and FICC, and the DTC Participants Fund are described in the Rules & Procedures of NSCC (''NSCC Rules''), the DTC Rules, By-laws and Organization Certificate (''DTC Rules''), the Clearing Rules of the Mortgage-Backed Securities Division of FICC (''MBSD Rules'') and the Rulebook of the Government Securities Division of FICC (''GSD Rules''), respectively, *available at http://dtcc.com/legal/rules-and-procedures. See* Rule 4 (Clearing Fund) of the NSCC Rules, Rule 4 (Participants Fund and Participants Investment) of the DTC Rules, Rule 4 (Clearing Fund and Loss Allocation) of the GSD Rules and Rule 4 (Clearing Fund and Loss Allocation) of the MBSD Rules.

[6] *See* Securities Exchange Act Release No. 79528 (December 12, 2016), 81 FR 91232 (December 16, 2016) (SR–DTC–2016–007, SR–FICC–2016–005, SR–NSCC–2016–003).

[7] 17 CFR 240.17Ad–22(e)(16). As discussed in this filing, the Investment Policy also addresses compliance with the requirements of Rule 17Ad–22(e)(3). 17 CFR 240.17Ad–22(e)(3).

agreements; as described in greater detail below.

Overview of the Investment Policy

The Investment Policy governs the management, custody and investment of cash deposited to the respective NSCC and FICC Clearing Funds, and the DTC Participants Fund, the proprietary liquid net assets (cash and cash equivalents) of the Clearing Agencies, and other funds held by the Clearing Agencies pursuant to their respective rules.

The Investment Policy identifies the guiding principles for investments and defines the roles and responsibilities of DTCC staff in administering the Investment Policy pursuant to those principles. The Investment Policy is co-owned by DTCC's Treasury group (''Treasury'')[8] and the Counterparty Credit Risk team (''CCR'') within DTCC's Group Chief Risk Office (''GCRO'').[9] Treasury is responsible for identifying potential counterparties to investment transactions, establishing and managing investment relationships with approved investment counterparties, and making and monitoring all investment transactions with respect to the Clearing Agencies. CCR is responsible for conducting a credit review of any potential counterparty, updating those reviews on a quarterly basis, and establishing an investment limit for each counterparty.

The Investment Policy also identifies sources of funds that may be invested, and the permitted investments of those funds, including the authority required to make such investments and the parameters of, and limitations on, each type of investment. Allowable investments include bank deposits, reverse repurchase agreements, direct obligations of the U.S. government, money market mutual funds, high-grade corporate debt, and hedge transactions. Finally, the Investment Policy defines the approval authority required to exceed established investment limits.

Proposed Revisions to the Investment Policy

The Investment Policy is reviewed and approved by the Boards annually. In connection with the most recent annual review of the Investment Policy and in order to reflect recent changes to NSCC's default liquidity funds, the Clearing Agencies have decided to propose certain revisions and updates. These proposed revisions, described in greater detail below, are designed to update the Investment Policy and help ensure that it reflects the Clearing Agencies' practices related to investments of funds.

1. Include Additional NSCC Default Liquidity in Table of Investable Funds

First, the Clearing Agencies are proposing to amend the table of investable funds in Section 5 of the Investment Policy to include proceeds from the issuance of term debt by NSCC in the description of NSCC's default liquidity funds.

This table identifies the sources of investable funds that are invested by the Clearing Agencies, and groups these sources of funds into separate categories. One of the categories of investable funds is the default liquidity funds of NSCC, which is currently described as including the proceeds from the issuance of commercial paper and extendible notes. NSCC recently proposed to raise additional prefunded default liquidity through the periodic issuance and private placement of term debt.[10] The investment of these funds would be governed by the Investment Policy.

The proposed change to the Investment Policy would include proceeds from the issuance of term debt in this category of ''Investable Funds'' to reflect the recent effectiveness of NSCC's proposal.[11]

2. Clarify Allowable Investments for DTC's Participants Fund

Second, the Clearing Agencies are proposing to make two revisions to the Investment Policy to clarify how DTC's Participants Fund may be invested. It has historically been DTC's practice to invest its Participants Fund in cash deposit accounts only, so that the funds are available for same-day access and settlement.

The Clearing Agencies are proposing to update the Investment Policy to more clearly reflect this practice. First, the Clearing Agencies are proposing to amend the table of allowable investments in Section 6.1 of the Investment Policy to include a separate column to identify the DTC Participants Fund, and show these funds as being available for investment only in bank deposits, including DTC's cash deposit account at the Federal Reserve Bank of New York. Currently, the DTC Participants Fund is included in the same column as the NSCC and FICC Clearing Funds, which may also be invested in other investment types. Therefore, as currently written, this table indicates that DTC's Participants Fund may also be invested in those other investment types. The proposed change to create a separate column for DTC's Participants Fund would more clearly identify the allowable investments of these funds.

Also, the Clearing Agencies are proposing to amend Section 6.2.1 of the Investment Policy, which describes the limits on investments in bank deposits, to explicitly state that DTC's Participants Fund may only be invested in demand deposit, savings or checking bank accounts that provide same day access to funds. This proposed change would clearly identify the limits on investments of DTC's Participants Fund in certain types of bank deposits.

The proposed changes would improve the Investment Policy by more clearly identifying DTC's practice with respect to the investment of its Participants Fund deposits.

3. Enhance Description of Collateral Related To Reverse Repurchase Agreements

Finally, the Clearing Agencies are proposing to amend Section 6.2.2 of the Investment Policy, which describes investment limits on investments in reverse repurchase agreements. The proposed changes would include additional detail to more clearly describe the collateral that may be posted by a counterparty in connection with these investments and to identify the required haircuts on such collateral.

More specifically, in these arrangements, where the Clearing Agencies are the purchaser of securities, the counterparty to the transaction delivers to the custodian collateral (either securities or cash). Currently, the Investment Policy states that securities posted as collateral must have a market value equal to 102% or greater of the cash invested. The proposed changes to the Investment Policy would further state that U.S. Treasury securities, U.S. agency securities and agency mortgage-backed securities posted as collateral must have a two percent haircut; and cash posted as collateral shall have no haircut, because cash does not carry any associated market risk that could lead to a change in collateral value.

The proposed changes would improve the Investment Policy by more clearly describing the limits applicable to these types of investments.

[8] Treasury is a part of the DTCC Finance Department and is responsible for the safeguarding, investment and disbursement of funds on behalf of the Clearing Agencies and in accordance with the principles outlined in the Investment Policy.

[9] Among other responsibilities, GCRO is generally responsible for the systems and processes designed to identify and manage credit, market and liquidity risks to the Clearing Agencies.

[10] *See* Securities Exchange Act Release No. 88146 (February 7, 2020), 85 FR 8046 (February 12, 2020) (SR–NSCC–2019–802).

[11] *Id.*

2. Statutory Basis

The Clearing Agencies believe that the proposed rule changes are consistent with the requirements of the Act and the rules and regulations thereunder applicable to a registered clearing agency. In particular, the Clearing Agencies believe that the proposed modifications to the Investment Policy are consistent with Section 17A(b)(3)(F) of the Act [12] and Rule 17Ad–22(e)(16) under the Act,[13] for the reasons described below.

Section 17A(b)(3)(F) of the Act requires, in part, that the rules of each of the Clearing Agencies be designed to assure the safeguarding of securities and funds which are in the custody or control of each of the Clearing Agencies or for which they are responsible.[14] The investment guidelines and governance procedures set forth in the Investment Policy are designed to safeguard funds which are in the custody or control of the Clearing Agencies or for which they are responsible. Such protections include, for example, following a prudent and conservative investment philosophy that places the highest priority on maximizing liquidity and risk avoidance. The Clearing Agencies believe each of these proposed changes would help facilitate the effective execution of the Investment Policy pursuant to the guiding principles set forth therein. Therefore, the Clearing Agencies believe the proposed changes would allow the Clearing Agencies to continue to operate the Investment Policy pursuant to a prudent and conservative investment philosophy that assures the safeguarding of securities and funds which are in their custody and control, or for which they are responsible.

First, the proposed change to include proceeds from NSCC's issuance of term debt in the table of ''Investable Funds'' would make investments of these funds subject to the guidelines and restrictions set forth in the Investment Policy, and, therefore, would assure the safeguarding of these funds.

Second, the proposed changes to clarify the allowable investments for DTC's Participants Fund and enhance the description of restrictions applicable to investments in reverse repurchase agreements would improve the clarity and accuracy of the Investment Policy. By creating clearer descriptions, the Clearing Agencies believe these proposed changes would make the Investment Policy more effective in governing the management, custody, and investment of funds of and held by the Clearing Agencies.

For the reasons described above, the Clearing Agencies believe the proposed changes would improve the effectiveness of the Investment Policy and allow the Investment Policy to continue to be administered in alignment with the investment guidelines and governance procedures set forth therein. Given that such guidelines and governance procedures are designed to safeguard funds which are in the custody or control of the Clearing Agencies or for which they are responsible, the Clearing Agencies believe the proposed changes are consistent with the requirements of Section 17A(b)(3)(F) of the Act.[15]

Rule 17Ad–22(e)(16) under the Act requires the Clearing Agencies to establish, implement, maintain and enforce written policies and procedures reasonably designed to safeguard the Clearing Agencies' own and their participants' assets, minimize the risk of loss and delay in access to these assets, and invest such assets in instruments with minimal credit, market, and liquidity risks.[16]

The Clearing Agencies believe that the Investment Policy follows a prudent and conservative investment philosophy, placing the highest priority on maximizing liquidity and avoiding risk of loss, by requiring the segregation of funds of each Clearing Agency and of types of funds of each Clearing Agency, using external credit ratings in the evaluation of counterparties, and establishing investment limits by counterparty as well as investment type. As originally implemented, the Investment Policy was designed to meet the requirements of Rule 17Ad–22(e)(16) under the Act.[17]

For the reasons stated above, the Clearing Agencies believe that each of the proposed revisions would improve the clarity and comprehensiveness of the Investment Policy and, therefore, make the Investment Policy more effective in governing the management, custody, and investment of funds of and held by the Clearing Agencies. In this way, the proposed changes would better allow the Clearing Agencies to maintain this document in a way that is designed to meet the requirements of Rule 17Ad–22(e)(16). Therefore, the Clearing Agencies believe the proposed revisions would be consistent with the requirements of Rule 17Ad–22(e)(16) under the Act.[18]

(B) Clearing Agency's Statement on Burden on Competition

Each of the Clearing Agencies believes that none of the proposed revisions to the Investment Policy would have any impact, or impose any burden, on competition. The Investment Policy applies equally to allowable investments of FICC and NSCC Clearing Funds and DTC Participants Fund deposits, as applicable, of each member of the Clearing Agencies, and establishes a uniform policy at the Clearing Agencies. The proposed changes to the Investment Policy would not affect any changes on the fundamental purpose or operation of this document and, as such, would also not have any impact, or impose any burden, on competition.

(C) Clearing Agency's Statement on Comments on the Proposed Rule Change Received From Members, Participants, or Others

The Clearing Agencies have not solicited or received any written comments relating to this proposal. The Clearing Agencies will notify the Commission of any written comments received by the Clearing Agencies.

III. Date of Effectiveness of the Proposed Rule Change, and Timing for Commission Action

Because the foregoing proposed rule change does not:

(i) Significantly affect the protection of investors or the public interest;

(ii) impose any significant burden on competition; and

(iii) become operative for 30 days from the date on which it was filed, or such shorter time as the Commission may designate, it has become effective pursuant to Section 19(b)(3)(A) of the Act [19] and Rule 19b–4(f)(6) thereunder.[20]

At any time within 60 days of the filing of the proposed rule change, the Commission summarily may temporarily suspend such rule change if it appears to the Commission that such action is necessary or appropriate in the public interest, for the protection of investors, or otherwise in furtherance of

[12] 15 U.S.C. 78q–1(b)(3)(F).

[13] 17 CFR 240.17Ad–22(e)(16).

[14] 15 U.S.C. 78q–1(b)(3)(F).

[15] *Id.*

[16] When the Investment Policy was implemented, the Clearing Agencies were subject to the requirements of subsection (d) of Rule 17Ad–22 under the Act, and the Investment Policy was designed to meet the requirements of Rule 17Ad–22(d)(3). *See supra* note 6; 17 CFR 240.17Ad–22(d). The Commission subsequently adopted Rule 17Ad–22(e) and amended Rule 17Ad–22(d) such that the Clearing Agencies became subject to the new requirements of Rule 17Ad–22(e) and are no longer subject to the requirements of Rule 17Ad–22(d). 17 CFR 240.17Ad–22(e).

[17] *Id.*

[18] 17 CFR 240.17Ad–22(e)(16).

[19] 15 U.S.C. 78s(b)(3)(A).

[20] 17 CFR 240.19b–4(f)(6).

the purposes of the Act. If the Commission takes such action, the Commission shall institute proceedings to determine whether the proposed rule should be approved or disapproved.

IV. Solicitation of Comments

Interested persons are invited to submit written data, views and arguments concerning the foregoing, including whether the proposed rule change is consistent with the Act. Comments may be submitted by any of the following methods:

Electronic Comments

- Use the Commission's internet comment form (*http://www.sec.gov/rules/sro.shtml*); or
- Send an email to *rule-comments@sec.gov.* Please include File Number SR–FICC–2020–003 on the subject line.

Paper Comments

- Send paper comments in triplicate to Secretary, Securities and Exchange Commission, 100 F Street NE, Washington, DC 20549.

All submissions should refer to File Number SR–FICC–2020–003. This file number should be included on the subject line if email is used. To help the Commission process and review your comments more efficiently, please use only one method. The Commission will post all comments on the Commission's internet website (*http://www.sec.gov/rules/sro.shtml*). Copies of the submission, all subsequent amendments, all written statements with respect to the proposed rule change that are filed with the Commission, and all written communications relating to the proposed rule change between the Commission and any person, other than those that may be withheld from the public in accordance with the provisions of 5 U.S.C. 552, will be available for website viewing and printing in the Commission's Public Reference Room, 100 F Street NE, Washington, DC 20549 on official business days between the hours of 10:00 a.m. and 3:00 p.m. Copies of the filing also will be available for inspection and copying at the principal office of FICC and on DTCC's website (*http://dtcc.com/legal/sec-rule-filings.aspx*). All comments received will be posted without change. Persons submitting comments are cautioned that we do not redact or edit personal identifying information from comment submissions. You should submit only information that you wish to make available publicly. All submissions should refer to File Number SR–FICC–2020–003 and should be submitted on or before April 24, 2020.

For the Commission, by the Division of Trading and Markets, pursuant to delegated authority.[21]

J. Matthew DeLesDernier,

Assistant Secretary.

[FR Doc. 2020–06955 Filed 4–2–20; 8:45 am]

BILLING CODE 8011–01–P

[21] 17 CFR 200.30–3(a)(12).

SECURITIES AND EXCHANGE COMMISSION

[Release No. 34–88513; File No. SR–DTC–2020–007]

Self-Regulatory Organizations; The Depository Trust Company; Notice of Filing and Immediate Effectiveness of a Proposed Rule Change To Revise the Clearing Agency Investment Policy

March 30, 2020.

Pursuant to Section 19(b)(1) of the Securities Exchange Act of 1934 (''Act'')[1] and Rule 19b–4 thereunder,[2] notice is hereby given that on March 26, 2020, The Depository Trust Company (''DTC'') filed with the Securities and Exchange Commission (''Commission'') the proposed rule change as described in Items I, II and III below, which Items have been prepared by the clearing agency. DTC filed the proposed rule change pursuant to Section 19(b)(3)(A) of the Act[3] and Rule 19b–4(f)(6) thereunder.[4] The Commission is publishing this notice to solicit comments on the proposed rule change from interested persons.

I. Clearing Agency's Statement of the Terms of Substance of the Proposed Rule Change

The proposed rule change would revise the Clearing Agency Investment Policy (''Investment Policy'') of DTC and its affiliates, National Securities Clearing Corporation (''NSCC'') and Fixed Income Clearing Corporation (''FICC,'' and together with DTC and NSCC, the ''Clearing Agencies'') in order to (1) include the proceeds of the issuance of term debt by NSCC as part of the description of ''Default Liquidity Funds'' within the section for ''Investable Funds''; (2) clarify the allowable investments for DTC's Participants Fund;[5] and (3) enhance the description of collateral that may be posted in connection with investments in reverse repurchase agreements; as described in greater detail below.

II. Clearing Agency's Statement of the Purpose of, and Statutory Basis for, the Proposed Rule Change

In its filing with the Commission, the clearing agency included statements concerning the purpose of and basis for the proposed rule change and discussed any comments it received on the proposed rule change. The text of these statements may be examined at the places specified in Item IV below. The clearing agency has prepared summaries, set forth in sections A, B, and C below, of the most significant aspects of such statements.

(A) Clearing Agency's Statement of the Purpose of, and Statutory Basis for, the Proposed Rule Change

1. Purpose

The Clearing Agencies are proposing to revise the Investment Policy, which was adopted for each clearing agency in December 2016[6] and is maintained in compliance with Rule 17Ad–22(e)(16) under the Act,[7] in order to (1) include the proceeds of the issuance of term debt by NSCC as part of the description of ''Default Liquidity Funds'' within the section for ''Investable Funds''; (2) clarify the allowable investments for DTC's Participants Fund; and (3) enhance the description of collateral that may be posted in connection with investments in reverse repurchase agreements; as described in greater detail below.

Overview of the Investment Policy

The Investment Policy governs the management, custody and investment of cash deposited to the respective NSCC and FICC Clearing Funds, and the DTC Participants Fund, the proprietary liquid net assets (cash and cash equivalents) of the Clearing Agencies, and other funds held by the Clearing

[1] 15 U.S.C. 78s(b)(1).

[2] 17 CFR 240.19b–4.

[3] 15 U.S.C. 78s(b)(3)(A).

[4] 17 CFR 240.19b–4(f)(6).

[5] The respective Clearing Funds of NSCC and FICC, and the DTC Participants Fund are described in the Rules & Procedures of NSCC (''NSCC Rules''), the DTC Rules, By-laws and Organization Certificate (''DTC Rules''), the Clearing Rules of the Mortgage-Backed Securities Division of FICC (''MBSD Rules'') and the Rulebook of the Government Securities Division of FICC (''GSD Rules''), respectively, *available at http://dtcc.com/legal/rules-and-procedures. See* Rule 4 (Clearing Fund) of the NSCC Rules, Rule 4 (Participants Fund and Participants Investment) of the DTC Rules, Rule 4 (Clearing Fund and Loss Allocation) of the GSD Rules and Rule 4 (Clearing Fund and Loss Allocation) of the MBSD Rules.

[6] *See* Securities Exchange Act Release No. 79528 (December 12, 2016), 81 FR 91232 (December 16, 2016) (SR–DTC–2016–007, SR–FICC–2016–005, SR–NSCC–2016–003).

[7] 17 CFR 240.17Ad–22(e)(16). As discussed in this filing, the Investment Policy also addresses compliance with the requirements of Rule 17Ad–22(e)(3). 17 CFR 240.17Ad–22(e)(3).

Agencies pursuant to their respective rules.

The Investment Policy identifies the guiding principles for investments and defines the roles and responsibilities of DTCC staff in administering the Investment Policy pursuant to those principles. The Investment Policy is co-owned by DTCC's Treasury group (''Treasury'')[8] and the Counterparty Credit Risk team (''CCR'') within DTCC's Group Chief Risk Office (''GCRO'').[9] Treasury is responsible for identifying potential counterparties to investment transactions, establishing and managing investment relationships with approved investment counterparties, and making and monitoring all investment transactions with respect to the Clearing Agencies. CCR is responsible for conducting a credit review of any potential counterparty, updating those reviews on a quarterly basis, and establishing an investment limit for each counterparty.

The Investment Policy also identifies sources of funds that may be invested, and the permitted investments of those funds, including the authority required to make such investments and the parameters of, and limitations on, each type of investment. Allowable investments include bank deposits, reverse repurchase agreements, direct obligations of the U.S. government, money market mutual funds, high-grade corporate debt, and hedge transactions. Finally, the Investment Policy defines the approval authority required to exceed established investment limits.

Proposed Revisions to the Investment Policy

The Investment Policy is reviewed and approved by the Boards annually. In connection with the most recent annual review of the Investment Policy and in order to reflect recent changes to NSCC's default liquidity funds, the Clearing Agencies have decided to propose certain revisions and updates. These proposed revisions, described in greater detail below, are designed to update the Investment Policy and help ensure that it reflects the Clearing Agencies' practices related to investments of funds.

1. Include Additional NSCC Default Liquidity in Table of Investable Funds

First, the Clearing Agencies are proposing to amend the table of investable funds in Section 5 of the Investment Policy to include proceeds from the issuance of term debt by NSCC in the description of NSCC's default liquidity funds.

This table identifies the sources of investable funds that are invested by the Clearing Agencies, and groups these sources of funds into separate categories. One of the categories of investable funds is the default liquidity funds of NSCC, which is currently described as including the proceeds from the issuance of commercial paper and extendible notes. NSCC recently proposed to raise additional prefunded default liquidity through the periodic issuance and private placement of term debt.[10] The investment of these funds would be governed by the Investment Policy.

The proposed change to the Investment Policy would include proceeds from the issuance of term debt in this category of ''Investable Funds'' to reflect the recent effectiveness of NSCC's proposal.[11]

2. Clarify Allowable Investments for DTC's Participants Fund

Second, the Clearing Agencies are proposing to make two revisions to the Investment Policy to clarify how DTC's Participants Fund may be invested. It has historically been DTC's practice to invest its Participants Fund in cash deposit accounts only, so that the funds are available for same-day access and settlement.

The Clearing Agencies are proposing to update the Investment Policy to more clearly reflect this practice. First, the Clearing Agencies are proposing to amend the table of allowable investments in Section 6.1 of the Investment Policy to include a separate column to identify the DTC Participants Fund, and show these funds as being available for investment only in bank deposits, including DTC's cash deposit account at the Federal Reserve Bank of New York. Currently, the DTC Participants Fund is included in the same column as the NSCC and FICC Clearing Funds, which may also be invested in other investment types. Therefore, as currently written, this table indicates that DTC's Participants Fund may also be invested in those other investment types. The proposed change to create a separate column for DTC's Participants Fund would more clearly identify the allowable investments of these funds.

Also, the Clearing Agencies are proposing to amend Section 6.2.1 of the Investment Policy, which describes the limits on investments in bank deposits, to explicitly state that DTC's Participants Fund may only be invested in demand deposit, savings or checking bank accounts that provide same day access to funds. This proposed change would clearly identify the limits on investments of DTC's Participants Fund in certain types of bank deposits.

The proposed changes would improve the Investment Policy by more clearly identifying DTC's practice with respect to the investment of its Participants Fund deposits.

3. Enhance Description of Collateral Related to Reverse Repurchase Agreements

Finally, the Clearing Agencies are proposing to amend Section 6.2.2 of the Investment Policy, which describes investment limits on investments in reverse repurchase agreements. The proposed changes would include additional detail to more clearly describe the collateral that may be posted by a counterparty in connection with these investments and to identify the required haircuts on such collateral.

More specifically, in these arrangements, where the Clearing Agencies are the purchaser of securities, the counterparty to the transaction delivers to the custodian collateral (either securities or cash). Currently, the Investment Policy states that securities posted as collateral must have a market value equal to 102% or greater of the cash invested. The proposed changes to the Investment Policy would further state that U.S. Treasury securities, U.S. agency securities and agency mortgage-backed securities posted as collateral must have a two percent haircut; and cash posted as collateral shall have no haircut, because cash does not carry any associated market risk that could lead to a change in collateral value.

The proposed changes would improve the Investment Policy by more clearly describing the limits applicable to these types of investments.

2. Statutory Basis

The Clearing Agencies believe that the proposed rule changes are consistent with the requirements of the Act and the rules and regulations thereunder applicable to a registered clearing agency. In particular, the Clearing Agencies believe that the proposed modifications to the Investment Policy

[8] Treasury is a part of the DTCC Finance Department and is responsible for the safeguarding, investment and disbursement of funds on behalf of the Clearing Agencies and in accordance with the principles outlined in the Investment Policy.

[9] Among other responsibilities, GCRO is generally responsible for the systems and processes designed to identify and manage credit, market and liquidity risks to the Clearing Agencies.

[10] *See* Securities Exchange Act Release No. 88146 (February 7, 2020), 85 FR 8046 (February 12, 2020) (SR–NSCC–2019–802).

[11] *Id.*

are consistent with Section 17A(b)(3)(F) of the Act[12] and Rule 17Ad–22(e)(16) under the Act,[13] for the reasons described below.

Section 17A(b)(3)(F) of the Act requires, in part, that the rules of each of the Clearing Agencies be designed to assure the safeguarding of securities and funds which are in the custody or control of each of the Clearing Agencies or for which they are responsible.[14] The investment guidelines and governance procedures set forth in the Investment Policy are designed to safeguard funds which are in the custody or control of the Clearing Agencies or for which they are responsible. Such protections include, for example, following a prudent and conservative investment philosophy that places the highest priority on maximizing liquidity and risk avoidance. The Clearing Agencies believe each of these proposed changes would help facilitate the effective execution of the Investment Policy pursuant to the guiding principles set forth therein. Therefore, the Clearing Agencies believe the proposed changes would allow the Clearing Agencies to continue to operate the Investment Policy pursuant to a prudent and conservative investment philosophy that assures the safeguarding of securities and funds which are in their custody and control, or for which they are responsible.

First, the proposed change to include proceeds from NSCC's issuance of term debt in the table of ''Investable Funds'' would make investments of these funds subject to the guidelines and restrictions set forth in the Investment Policy, and, therefore, would assure the safeguarding of these funds.

Second, the proposed changes to clarify the allowable investments for DTC's Participants Fund and enhance the description of restrictions applicable to investments in reverse repurchase agreements would improve the clarity and accuracy of the Investment Policy. By creating clearer descriptions, the Clearing Agencies believe these proposed changes would make the Investment Policy more effective in governing the management, custody, and investment of funds of and held by the Clearing Agencies.

For the reasons described above, the Clearing Agencies believe the proposed changes would improve the effectiveness of the Investment Policy and allow the Investment Policy to continue to be administered in alignment with the investment guidelines and governance procedures set forth therein. Given that such guidelines and governance procedures are designed to safeguard funds which are in the custody or control of the Clearing Agencies or for which they are responsible, the Clearing Agencies believe the proposed changes are consistent with the requirements of Section 17A(b)(3)(F) of the Act.[15]

Rule 17Ad–22(e)(16) under the Act requires the Clearing Agencies to establish, implement, maintain and enforce written policies and procedures reasonably designed to safeguard the Clearing Agencies' own and their participants' assets, minimize the risk of loss and delay in access to these assets, and invest such assets in instruments with minimal credit, market, and liquidity risks.[16]

The Clearing Agencies believe that the Investment Policy follows a prudent and conservative investment philosophy, placing the highest priority on maximizing liquidity and avoiding risk of loss, by requiring the segregation of funds of each Clearing Agency and of types of funds of each Clearing Agency, using external credit ratings in the evaluation of counterparties, and establishing investment limits by counterparty as well as investment type. As originally implemented, the Investment Policy was designed to meet the requirements of Rule 17Ad–22(e)(16) under the Act.[17]

For the reasons stated above, the Clearing Agencies believe that each of the proposed revisions would improve the clarity and comprehensiveness of the Investment Policy and, therefore, make the Investment Policy more effective in governing the management, custody, and investment of funds of and held by the Clearing Agencies. In this way, the proposed changes would better allow the Clearing Agencies to maintain this document in a way that is designed to meet the requirements of Rule 17Ad–22(e)(16). Therefore, the Clearing Agencies believe the proposed revisions would be consistent with the requirements of Rule 17Ad–22(e)(16) under the Act.[18]

(B) Clearing Agency's Statement on Burden on Competition

Each of the Clearing Agencies believes that none of the proposed revisions to the Investment Policy would have any impact, or impose any burden, on competition. The Investment Policy applies equally to allowable investments of FICC and NSCC Clearing Funds and DTC Participants Fund deposits, as applicable, of each member of the Clearing Agencies, and establishes a uniform policy at the Clearing Agencies. The proposed changes to the Investment Policy would not affect any changes on the fundamental purpose or operation of this document and, as such, would also not have any impact, or impose any burden, on competition.

(C) Clearing Agency's Statement on Comments on the Proposed Rule Change Received From Members, Participants, or Others

The Clearing Agencies have not solicited or received any written comments relating to this proposal. The Clearing Agencies will notify the Commission of any written comments received by the Clearing Agencies.

III. Date of Effectiveness of the Proposed Rule Change, and Timing for Commission Action

Because the foregoing proposed rule change does not:

(i) Significantly affect the protection of investors or the public interest;

(ii) impose any significant burden on competition; and

(iii) become operative for 30 days from the date on which it was filed, or such shorter time as the Commission may designate, it has become effective pursuant to Section 19(b)(3)(A) of the Act[19] and Rule 19b–4(f)(6) thereunder.[20]

At any time within 60 days of the filing of the proposed rule change, the Commission summarily may temporarily suspend such rule change if it appears to the Commission that such action is necessary or appropriate in the public interest, for the protection of investors, or otherwise in furtherance of the purposes of the Act. If the Commission takes such action, the Commission shall institute proceedings to determine whether the proposed rule should be approved or disapproved.

IV. Solicitation of Comments

Interested persons are invited to submit written data, views and arguments concerning the foregoing,

[12] 15 U.S.C. 78q–1(b)(3)(F).

[13] 17 CFR 240.17Ad–22(e)(16).

[14] 15 U.S.C. 78q–1(b)(3)(F).

[15] *Id.*

[16] When the Investment Policy was implemented, the Clearing Agencies were subject to the requirements of subsection (d) of Rule 17Ad–22 under the Act, and the Investment Policy was designed to meet the requirements of Rule 17Ad–22(d)(3). *See supra* note 6; 17 CFR 240.17Ad–22(d). The Commission subsequently adopted Rule 17Ad–22(e) and amended Rule 17Ad–22(d) such that the Clearing Agencies became subject to the new requirements of Rule 17Ad–22(e) and are no longer subject to the requirements of Rule 17Ad–22(d). 17 CFR 240.17Ad–22(e).

[17] *Id.*

[18] 17 CFR 240.17Ad–22(e)(16).

[19] 15 U.S.C. 78s(b)(3)(A).

[20] 17 CFR 240.19b–4(f)(6).

including whether the proposed rule change is consistent with the Act. Comments may be submitted by any of the following methods:

Electronic Comments

- Use the Commission's internet comment form (*http://www.sec.gov/rules/sro.shtml*); or
- Send an email to *rule-comments@sec.gov.* Please include File Number SR–DTC–2020–007 on the subject line.

Paper Comments

- Send paper comments in triplicate to Secretary, Securities and Exchange Commission, 100 F Street NE, Washington, DC 20549.

All submissions should refer to File Number SR–DTC–2020–007. This file number should be included on the subject line if email is used. To help the Commission process and review your comments more efficiently, please use only one method. The Commission will post all comments on the Commission's internet website (*http://www.sec.gov/rules/sro.shtml*). Copies of the submission, all subsequent amendments, all written statements with respect to the proposed rule change that are filed with the Commission, and all written communications relating to the proposed rule change between the Commission and any person, other than those that may be withheld from the public in accordance with the provisions of 5 U.S.C. 552, will be available for website viewing and printing in the Commission's Public Reference Room, 100 F Street NE, Washington, DC 20549 on official business days between the hours of 10:00 a.m. and 3:00 p.m. Copies of the filing also will be available for inspection and copying at the principal office of DTC and on DTCC's website (*http://dtcc.com/legal/sec-rule-filings.aspx*). All comments received will be posted without change. Persons submitting comments are cautioned that we do not redact or edit personal identifying information from comment submissions. You should submit only information that you wish to make available publicly. All submissions should refer to File Number SR–DTC–2020–007 and should be submitted on or before April 24, 2020.

For the Commission, by the Division of Trading and Markets, pursuant to delegated authority.[21]

J. Matthew DeLesDernier,

Assistant Secretary.

[FR Doc. 2020–06956 Filed 4–2–20; 8:45 am]

BILLING CODE 8011–01–P

[21] 17 CFR 200.30–3(a)(12).

SECURITIES AND EXCHANGE COMMISSION

[SEC File No. 270–196, OMB Control No. 3235–0202]

Proposed Collection; Comment Request

Upon Written Request, Copies Available From: Securities and Exchange Commission, Office of FOIA Services, 100 F Street NE, Washington, DC 20549–2736

Extension:
Rule 15c2–11

Notice is hereby given that, pursuant to the Paperwork Reduction Act of 1995 (44 U.S.C. 3501 *et seq.*) (''PRA''), the Securities and Exchange Commission (''Commission'') is soliciting comments on the existing collection of information provided for in Rule 15c2–11, (17 CFR 240.15c2–11), under the Securities Exchange Act of 1934 (15 U.S.C. 78a *et seq.*) (''Exchange Act''). The Commission plans to submit this existing collection of information to the Office of Management and Budget (''OMB'') for extension and approval.

Rule 15c2–11 under the Exchange Act regulates the initiation or resumption of quotations in a quotation medium by a broker-dealer for over-the-counter (''OTC'') securities. The Rule is intended to prevent broker-dealers from initiating or resuming quotations for OTC securities that may facilitate a fraudulent or manipulative scheme. Subject to certain exceptions, the Rule prohibits broker-dealers from publishing a quotation for a security, or submitting a quotation for publication, in a quotation medium unless they have reviewed specified information concerning the security and the issuer. With respect to the securities of certain private issuers, a broker-dealer must make such information reasonably available upon request to any person expressing an interest in a proposed transaction in the security with such broker or dealer.

Based on information provided by the Financial Industry Regulatory Authority, Inc. (''FINRA''), we understand that in the 2019 calendar year, approximately 34 broker-dealers completed information reviews pursuant to the Rule for 384 securities—87 concerning securities of reporting issuers, and 297 concerning securities of non-reporting issuers. The collection of information that is submitted to FINRA for review and approval is currently not available to the public from FINRA.

We estimate that it will take a broker-dealer 4 hours to review, record and retain the information pertaining to a reporting issuer (approximately 3 hours relating to recordkeeping and one hour relating to third-party disclosure), and 8 hours to review, record and retain the information pertaining to a non-reporting issuer (approximately 7 hours relating to recordkeeping and one hour relating to third-party disclosure). We therefore estimate that the total time burden for recordkeeping associated with the information review requirement of the Rule will be 2,340 hours [for (87 reviews for reporting issuers × 3 hours) + (297 reviews for non-reporting issuers × 7 hours)]; and the total time burden for third-party disclosure associated with the information review requirement of the Rule will be 384 hours [for (87 reviews for reporting issuers × 1 hour) + (297 reviews for non-reporting issuers × 1 hour)]. Thus, we estimate the industrywide total annual burden hours associated with the information review requirement under the Rule to be 2,724 hours (2,340 hours for recordkeeping + 384 hours for third-party disclosure). The Commission believes that the internal compliance costs for these 2,724 hours would be borne by internal staff working at a rate of $62 per hour.[1]

Written comments are invited on: (a) Whether the proposed collection of information is necessary for the proper performance of the functions of the Commission, including whether the information shall have practical utility; (b) the accuracy of the Commission's estimates of the burden of the proposed collection of information; (c) ways to enhance the quality, utility, and clarity of the information collected; and (d) ways to minimize the burden of the collection of information on respondents, including through the use of automated collection techniques or other forms of information technology. Consideration will be given to comments and suggestions submitted in writing within 60 days of this publication.

[1] The $62 per hour figure for a General Clerk is from SIFMA's Office Salaries in the Securities Industry 2013, modified by Commission staff to account for an 1800-hourwork-year and inflation, and multiplied by 2.93 to account for bonuses, firm size, employee benefits and overhead.

An agency may not conduct or sponsor, and a person is not required to respond to, a collection of information under the PRA unless it displays a currently valid OMB control number.

Please direct your written comments to: David Bottom, Director/Chief Information Officer, Securities and Exchange Commission, c/o Cynthia Roscoe, 100 F Street NE, Washington, DC 20549, or send an email to: *PRA_Mailbox@sec.gov.*

Dated: March 31, 2020.

J. Matthew DeLesDernier,

Assistant Secretary.

[FR Doc. 2020–07022 Filed 4–2–20; 8:45 am]

BILLING CODE 8011–01–P

SECURITIES AND EXCHANGE COMMISSION

[SEC File No. 270–189, OMB Control No. 3235–0201]

Proposed Collection; Comment Request

Upon Written Request, Copies Available From: Securities and Exchange Commission, Office of FOIA Services, 100 F Street NE, Washington, DC 20549–27363.

Extension:
Rule 17a–2.

Notice is hereby given that pursuant to the Paperwork Reduction Act of 1995 (''PRA'') (44 U.S.C. 3501 *et seq.*), the Securities and Exchange Commission (''Commission'') is soliciting comments on the existing collection of information provided for in Rule 17a–2 (17 CFR 240.17a–2), under the Securities Exchange Act of 1934 (15 U.S.C. 78a *et seq.*). The Commission plans to submit this existing collection of information to the Office of Management and Budget (''OMB'') for extension and approval.

Rule 17a–2—Recordkeeping Requirements Relating to Stabilizing Activities—requires underwriters to maintain information regarding stabilizing activities conducted in accordance with Rule 104 of Regulation M. The collections of information under Regulation M and Rule 17a–2 are necessary for covered persons to obtain certain benefits or to comply with certain requirements. The collections of information are necessary to provide the Commission with information regarding syndicate covering transactions and penalty bids. The Commission may review this information during periodic examinations or with respect to investigations. Except for the information required to be kept under Rule 104(i) (17 CFR 242.104(i)) and Rule 17a–2(c), none of the information required to be collected or disclosed for PRA purposes will be kept confidential. The recordkeeping requirement of Rule 17a–2 requires the information be maintained in a separate file, or in a separately retrievable format, for a period of three years, the first two years in an easily accessible place, consistent with the requirements of Exchange Act Rule 17a–4(f) (17 CFR 240.17a–4(f)).

There are approximately 805 respondents per year that require an aggregate total of 4,025 hours to comply with this rule. Each respondent makes an estimated 1 annual response. Each response takes approximately 5 hours to complete. Thus, the total compliance burden per year is 4,025 burden hours. The total estimated internal compliance cost for the respondents is approximately $281,750, resulting in an internal cost of compliance for each respondent per response of approximately $350.00 (*i.e.,* $281,750.00/805 responses).

Written comments are invited on: (a) Whether the proposed collection of information is necessary for the proper performance of the functions of the Commission, including whether the information shall have practical utility; (b) the accuracy of the Commission's estimates of the burden of the proposed collection of information; (c) ways to enhance the quality, utility, and clarity of the information to be collected; and (d) ways to minimize the burden of the collection of information on respondents, including through the use of automated collection techniques or other forms of information technology. Consideration will be given to comments and suggestions submitted in writing within 60 days of this publication.

An agency may not conduct or sponsor, and a person is not required to respond to, a collection of information under the PRA unless it displays a currently valid OMB control number.

Please direct your written comments to: David Bottom, Director/Chief Information Officer, Securities and Exchange Commission, c/o Cynthia Roscoe, 100 F Street NE, Washington, DC 20549 or send an email to: *PRA_Mailbox@sec.gov.*

Dated: March 31, 2020.

J. Matthew DeLesDernier,

Assistant Secretary.

[FR Doc. 2020–07023 Filed 4–2–20; 8:45 am]

BILLING CODE 8011–01–P

SECURITIES AND EXCHANGE COMMISSION

[SEC File No. 270–410, OMB Control No. 3235–0466]

Proposed Collection; Comment Request

Upon Written Request, Copies Available From: Securities and Exchange Commission, Office of FOIA Services, 100 F Street NE, Washington, DC 20549–2736.

Extension:
Rule 103

Notice is hereby given that pursuant to the Paperwork Reduction Act of 1995 (''PRA'') (44 U.S.C. 3501 *et seq.*), the Securities and Exchange Commission (''Commission'') is soliciting comments on the existing collection of information provided for in Rule 103 of Regulation M (17 CFR 242.103), under the Securities Exchange Act of 1934 (15 U.S.C. 78a *et seq.*). The Commission plans to submit this existing collection of information to the Office of Management and Budget (''OMB'') for extension and approval.

Rule 103—Nasdaq Passive Market Making—permits passive market-making in Nasdaq securities during a distribution. A distribution participant that seeks use of this exception would be required to disclose to third parties its intention to engage in passive market making.

There are approximately 307 respondents per year that require an aggregate total of 307 hours to comply with this rule. Each respondent makes an estimated 1 annual response. Each response takes approximately 1 hour to complete. Thus, the total compliance burden per year is 307 burden hours. The total estimated internal labor cost of compliance for the respondents is approximately $21,490.00 per year, resulting in an estimated internal labor cost of compliance per response of approximately $70.00 (*i.e.,* $21,490.00/307 responses).

Written comments are invited on: (a) Whether the proposed collection of information is necessary for the proper performance of the functions of the Commission, including whether the information shall have practical utility; (b) the accuracy of the Commission's estimates of the burden of the proposed collection of information; (c) ways to enhance the quality, utility, and clarity of the information to be collected; and (d) ways to minimize the burden of the collection of information on respondents, including through the use of automated collection techniques or other forms of information technology.

Consideration will be given to comments and suggestions submitted in writing within 60 days of this publication.

An agency may not conduct or sponsor, and a person is not required to respond to, a collection of information under the PRA unless it displays a currently valid OMB control number.

Please direct your written comments to: David Bottom, Director/Chief Information Officer, Securities and Exchange Commission, c/o Cynthia Roscoe, 100 F Street, NE, Washington, DC 20549 or send an email to: *PRA_Mailbox@sec.gov.*

Dated: March 31, 2020.

J. Matthew DeLesDernier,

Assistant Secretary.

[FR Doc. 2020–07025 Filed 4–2–20; 8:45 am]

BILLING CODE 8011–01–P

SECURITIES AND EXCHANGE COMMISSION

[SEC File No. 270–408, OMB Control No. 3235–0464]

Proposed Collection; Comment Request

Upon Written Request, Copies Available From: Securities and Exchange Commission, Office of FOIA Services, 100 F Street NE, Washington, DC 20549–2736

Extension:
Rule 101

Notice is hereby given that pursuant to the Paperwork Reduction Act of 1995 (''PRA'') (44 U.S.C. 3501 *et seq.*), the Securities and Exchange Commission (''Commission'') is soliciting comments on the exisiting collection of information provided for in Rule 101 of Regulation M (17 CFR 242.101), under the Securities Exchange Act of 1934 (15 U.S.C. 78a *et seq.*). The Commission plans to submit this existing collection of information to the Office of Management and Budget (''OMB'') for extension and approval.

Rule 101—Activities by Distribution Participants—prohibits distribution participants from purchasing activities at specified times during a distribution of securities. Persons otherwise covered by this rule may seek to use several applicable exceptions such as a calculation of the average daily trading volume of the securities in distribution, the maintenance of policies regarding information barriers between their affiliates, and the maintenance of a written policy regarding general compliance with Regulation M for de minimus transactions.

There are approximately 1,589 respondents per year that require an aggregate total of 27,215 hours to comply with this rule. Each respondent makes an estimated 1 annual response. Each response takes on average approximately 17.127 hours to complete. Thus, the total compliance burden per year is 27,215 burden hours. The total estimated internal labor compliance cost for the respondents is approximately $1,905,050, resulting in an estimated internal labor cost of compliance for each respondent per response of approximately $1,198.90 (*i.e.,* $1,905,050/1,589 responses).

Written comments are invited on: (a) Whether the proposed collection of information is necessary for the proper performance of the functions of the Commission, including whether the information shall have practical utility; (b) the accuracy of the Commission's estimates of the burden of the proposed collection of information; (c) ways to enhance the quality, utility, and clarity of the information collected; and (d) ways to minimize the burden of the collection of information on respondents, including through the use of automated collection techniques or other forms of information technology. Consideration will be given to comments and suggestions submitted in writing within 60 days of this publication.

An agency may not conduct or sponsor, and a person is not required to respond to, a collection of information under the PRA unless it displays a currently valid OMB control number.

Please direct your written comments to: David Bottom, Director/Chief Information Officer, Securities and Exchange Commission, c/o Cynthia Roscoe, 100 F Street NE, Washington, DC 20549 or send an email to: *PRA_Mailbox@sec.gov.*

Dated: March 31, 2020.

J. Matthew DeLesDernier,

Assistant Secretary.

[FR Doc. 2020–07024 Filed 4–2–20; 8:45 am]

BILLING CODE 8011–01–P

SMALL BUSINESS ADMINISTRATION

[Disaster Declarations of Economic Injury for the Coronavirus (COVID–19)]

Administrative Declarations of Economic Injury Disasters for the Entire United States and U.S. Territories

AGENCY: U.S. Small Business Administration.

ACTION: Notice.

SUMMARY: This is a notice that Economic Injury Disaster Loan (EIDL) declarations have been issued for each State and Territory of the U.S.

Incident: Coronavirus (COVID–19).

Incident Period: 01/31/2020 and continuing.

DATES: Issued between 03/16/2020 to 03/21/2020.

Economic Injury (EIDL) Loan Application Deadline Date: 12/16/2020 to 12/21/2020.

ADDRESSES: Submit completed loan applications to: U.S. Small Business Administration, Processing and Disbursement Center, 14925 Kingsport Road, Fort Worth, TX 76155.

FOR FURTHER INFORMATION CONTACT: A. Escobar, Office of Disaster Assistance, U.S. Small Business Administration, 409 3rd Street SW, Suite 6050, Washington, DC 20416, (202) 205–6734.

SUPPLEMENTARY INFORMATION: Notice is hereby given that as a result of the Administrator's EIDL declarations, applications for economic injury disaster loans may be filed at the address listed above or other locally announced locations. For additional information, please visit *SBA.gov/disaster*. For questions, please contact the SBA disaster assistance customer service center at 1–800–659–2955 (TTY: 1–800–877–8339) or email *disastercustomerservice@sba.gov*.

The following United States and U.S. Territories have been determined to be adversely affected by the disaster:

CORONAVIRUS (COVID–19) EIDL DISASTER DECLARATIONS

State	Declaration #	Disaster #	Disaster description	Declaration date	Deadline date
ALABAMA	16364	AL–00104	Coronavirus (COVID–19)	03/20/2020	12/21/2020
ALASKA	16386	AK–00046	Coronavirus (COVID–19)	03/21/2020	12/21/2020
AMERICAN SAMOA	16389	AS–00008	Coronavirus (COVID–19)	03/21/2020	12/21/2020

CORONAVIRUS (COVID–19) EIDL DISASTER DECLARATIONS—Continued

State	Declaration #	Disaster #	Disaster description	Declaration date	Deadline date
ARIZONA	16350	AZ–00065	Coronavirus (COVID–19)	03/19/2020	12/21/2020
ARKANSAS	16372	AR–00109	Coronavirus (COVID–19)	03/20/2020	12/21/2020
CALIFORNIA	16332	CA–00313	Coronavirus (COVID–19)	03/16/2020	12/16/2020
COLORADO	16367	CO–00113	Coronavirus (COVID–19)	03/19/2020	12/21/2020
CONNECTICUT	16335	CT–00046	Coronavirus (COVID–19)	03/16/2020	12/16/2020
DELAWARE	16342	DE–00024	Coronavirus (COVID–19)	03/18/2020	12/18/2020
DISTRICT OF COLUMBIA	16336	DC–00008	Coronavirus (COVID–19)	03/17/2020	12/17/2020
FLORIDA	16353	FL–00152	Coronavirus (COVID–19)	03/18/2020	12/18/2020
GEORGIA	16347	GA–00116	Coronavirus (COVID–19)	03/18/2020	12/18/2020
GUAM	16388	GU–00008	Coronavirus (COVID–19)	03/21/2020	12/21/2020
HAWAII	16369	HI–00056	Coronavirus (COVID–19)	03/20/2020	12/21/2020
IDAHO	16379	ID–00079	Coronavirus (COVID–19)	03/20/2020	12/21/2020
ILLINOIS	16370	IL–00059	Coronavirus (COVID–19)	03/19/2020	12/21/2020
INDIANA	16348	IN–00073	Coronavirus (COVID–19)	03/18/2020	12/18/2020
IOWA	16382	IA–00091	Coronavirus (COVID–19)	03/21/2020	12/21/2020
KANSAS	16385	KS–00132	Coronavirus (COVID–19)	03/21/2020	12/21/2020
KENTUCKY	16377	KY–00080	Coronavirus (COVID–19)	03/20/2020	12/21/2020
LOUISIANA	16351	LA–00101	Coronavirus (COVID–19)	03/19/2020	12/21/2020
MAINE	16334	ME–00052	Coronavirus (COVID–19)	03/16/2020	12/16/2020
MARYLAND	16376	MD–00041	Coronavirus (COVID–19)	03/19/2020	12/21/2020
MASSACHUSETTS	16344	MA–00078	Coronavirus (COVID–19)	03/18/2020	12/18/2020
MICHIGAN	16356	MI–00081	Coronavirus (COVID–19)	03/19/2020	12/21/2020
MINNESOTA	16365	MN–00080	Coronavirus (COVID–19)	03/20/2020	12/21/2020
MISSISSIPPI	16362	MS–00122	Coronavirus (COVID–19)	03/20/2020	12/21/2020
MISSOURI	16387	MO–00104	Coronavirus (COVID–19)	03/21/2020	12/21/2020
MONTANA	16340	MT–00129	Coronavirus (COVID–19)	03/17/2020	12/17/2020
NEBRASKA	16371	NE–00081	Coronavirus (COVID–19)	03/20/2020	12/21/2020
NEVADA	16341	NV–00057	Coronavirus (COVID–19)	03/17/2020	12/17/2020
NEW HAMPSHIRE	16343	NH–00049	Coronavirus (COVID–19)	03/18/2020	12/18/2020
NEW JERSEY	16349	NJ–00057	Coronavirus (COVID–19)	03/18/2020	12/18/2020
NEW MEXICO	16339	NM–00064	Coronavirus (COVID–19)	03/17/2020	12/17/2020
NEW YORK	16346	NY–00197	Coronavirus (COVID–19)	03/19/2020	12/21/2020
NORTH CAROLINA	16345	NC–00115	Coronavirus (COVID–19)	03/18/2020	12/18/2020
NORTH DAKOTA	16366	ND–00080	Coronavirus (COVID–19)	03/20/2020	12/21/2020
COMMONWEALTH of NORTHERN MARIANA ISLANDS.	16390	MP–00013	Coronavirus (COVID–19)	03/21/2020	12/21/2020
OHIO	16355	OH–00077	Coronavirus (COVID–19)	03/19/2020	12/21/2020
OKLAHOMA	16373	OK–00135	Coronavirus (COVID–19)	03/20/2020	12/21/2020
OREGON	16378	OR–00101	Coronavirus (COVID–19)	03/20/2020	12/21/2020
PENNSYLVANIA	16360	PA–00104	Coronavirus (COVID–19)	03/19/2020	12/21/2020
PUERTO RICO	16380	PR–00036	Coronavirus (COVID–19)	03/20/2020	12/21/2020
RHODE ISLAND	16337	RI–00021	Coronavirus (COVID–19)	03/17/2020	12/17/2020
SOUTH CAROLINA	16352	SC–00067	Coronavirus (COVID–19)	03/19/2020	12/21/2020
SOUTH DAKOTA	16374	SD–00102	Coronavirus (COVID–19)	03/20/2020	12/21/2020
TENNESSEE	16375	TN–00119	Coronavirus (COVID–19)	03/20/2020	12/21/2020
TEXAS	16381	TX–00544	Coronavirus (COVID–19)	03/20/2020	12/21/2020
US VIRGIN ISLANDS	16383	VI–00015	Coronavirus (COVID–19)	03/21/2020	12/21/2020
UTAH	16338	UT–00066	Coronavirus (COVID–19)	03/17/2020	12/17/2020
VERMONT	16361	VT–00040	Coronavirus (COVID–19)	03/20/2020	12/21/2020
VIRGINIA	16359	VA–00087	Coronavirus (COVID–19)	03/19/2020	12/21/2020
WASHINGTON	16333	WA–00083	Coronavirus (COVID–19)	03/16/2020	12/16/2020
WEST VIRGINIA	16354	WV–00052	Coronavirus (COVID–19)	03/19/2020	12/21/2020
WISCONSIN	16363	WI–00072	Coronavirus (COVID–19)	03/20/2020	12/21/2020
WYOMING	16368	WY–00049	Coronavirus (COVID–19)	03/20/2020	12/21/2020

The Interest Rates are:

Businesses and Small Agricultural Cooperatives without Credit Available Elsewhere	3.750
Non-Profit Organizations without Credit Available Elsewhere	2.750

(Catalog of Federal Domestic Assistance Number 59008)

Jovita Carranza,

Administrator.

[FR Doc. 2020–06934 Filed 4–2–20; 8:45 am]

BILLING CODE 8026–03–P

SURFACE TRANSPORTATION BOARD

[Docket No. FD 36388]

Belpre Industrial Parkersburg Railroad, LLC—Lease and Operation Exemption—CSX Transportation, Inc.

Belpre Industrial Parkersburg Railroad, LLC (BIP), a noncarrier, has filed a verified notice of exemption under 49 CFR 1150.31 to lease and operate approximately 46.9 miles of rail

lines and yard property owned by CSX Transportation, Inc. (CSXT). BIP proposes to lease and operate the following rail lines and property: (1) The Marietta Subdivision, which extends between Belpre, Ohio, at or near CSXT milepost BUS 0.0, and Relief, Ohio, at or near CSXT milepost BUS 38.0, a distance of approximately 38 miles; (2) the Parkersburg Running Track, which extends between Parkersburg, W. Va., at or near CSXT milepost BB 194.59, and Belpre, at or near CSXT milepost BB 189.3, a distance of approximately 5.29 miles; (3) the High Yard, located in Parkersburg at or near CSXT milepost BA 383.04, including all support, ancillary, and other tracks forming the yard; and (4) the High Yard Main Track, which extends through the High Yard, beginning at or near CSXT milepost BA 384.8, through the east end of the yard, and to the end of track, at or near CSXT milepost BA 381.19, in Parkersburg, a distance of approximately 3.61 miles. The Marietta Subdivision, Parkersburg Running Track, and High Yard Main Track are referred to collectively herein as the Lines.

BIP states that it will shortly enter into an agreement with CSXT to lease the Lines from CSXT and BIP will be the operator of the Lines.[1]

According to BIP, the lease does not contain a provision or agreement that may limit future interchange with a third-party connecting carrier. BIP certifies that its projected revenues as a result of the transaction will not exceed those of a Class III carrier and will not exceed $5 million.

The earliest this transaction may be consummated is April 18, 2020 (30 days after the verified notice of exemption was filed).

If the verified notice contains false or misleading information, the exemption is void ab initio. Petitions to revoke the exemption under 49 U.S.C. 10502(d) may be filed at any time. The filing of a petition to revoke will not automatically stay the effectiveness of the exemption. Petitions for stay must be filed no later than April 10, 2020 (at least seven days before the exemption becomes effective).

All pleadings, referring to Docket No. FD 36388, must be filed with the Surface Transportation Board either via e-filing or in writing addressed to 395 E Street SW, Washington, DC 20423–0001. In addition, a copy of each pleading must be served on BIP's representative, David F. Rifkind, Stinson LLP, 1775 Pennsylvania Avenue NW, Suite 800, Washington, DC 20006.

According to BIP, this action is categorically excluded from environmental review under 49 CFR 1105.6(c) and from historic preservation reporting requirements under 49 CFR 1105.8(b).

Board decisions and notices are available at *www.stb.gov.*

Decided: March 30, 2020.

By the Board, Allison C. Davis, Director, Office of Proceedings.

Aretha Laws-Byrum,

Clearance Clerk.

[FR Doc. 2020–06978 Filed 4–2–20; 8:45 am]

BILLING CODE 4915–01–P

[1] The parties' agreement provides for an initial term of fifteen years, subject to an automatic five-year extension if certain conditions are met.

SURFACE TRANSPORTATION BOARD

[Docket No. FD 36393]

Raritan Central Railway, LLC—Lease and Operation Exemption—Consolidated Rail Corporation

Raritan Central Railway, LLC (RCRY), a Class III railroad, has filed a verified notice of exemption under 49 CFR 1150.41 to lease from Consolidated Rail Corporation (Conrail) and operate approximately 7.08 miles of rail lines in Middlesex County, N.J. (the Line), consisting of the following: (1) The Bonhamton Industrial Track, from the switch connection for the east and west legs of the Northeast Corridor wye, including the at-grade crossing of High Street, to its connection with the Raritan Industrial Track; (2) the Miracle Run Branch, from its connection with the Bonhamton Industrial Track to the end of Conrail's ownership in the vicinity of Vineyard Road; (3) the Raritan Industrial Track, from its connection with the Bonhamton Industrial Track to the east side of Crows Mill Road, including the at-grade crossing thereof; and (4) the Raritan Center Industrial Track, from its connection with the Raritan Industrial Track to a point 579 feet beyond the point of switch towards Heller Park, and to a point 150 feet beyond the clearance point of said switch towards the out of service track for headroom only.[1] RCRY states that the Line does not have mileposts because it runs through and in the vicinity of two industrial parks, the Raritan Center Industrial Park and the Heller Industrial Park.

The verified notice states that RCRY entered into a lease with Conrail dated March 17, 2020, to provide common carrier rail service over the Line. The verified notice further states that RCRY will operate the Line after the transaction, although Conrail, the current operator of the Line, has reserved rights to operate over portions of the Line.

RCRY certifies that the lease does not impose or include an interchange commitment.

RCRY further certifies that its projected annual revenues as a result of the proposed transaction will not result in the creation of a Class II or Class I rail carrier and will not exceed $5 million.

The earliest this transaction may be consummated is April 17, 2020 (30 days after the verified notice of exemption was filed). If the verified notice contains false or misleading information, the exemption is void ab initio. Petitions to revoke the exemption under 49 U.S.C. 10502(d) may be filed at any time. The filing of a petition to revoke will not automatically stay the effectiveness of the exemption. Petitions for stay must be filed no later than April 10, 2020 (at least seven days before the exemption becomes effective).

All pleadings, referring to Docket No. FD 36393, must be filed with the Surface Transportation Board either via e-filing or in writing addressed to 395 E Street SW, Washington, DC 20423–0001. In addition, a copy of each pleading must be served on RCRY's representative: Eric M. Hocky, Clark Hill PLC, Two Commerce Square, 2001 Market Street, Suite 2620, Philadelphia, PA 19103.

According to RCRY, this action is categorically excluded from environmental review under 49 CFR 1105.7(e) and from historic preservation reporting requirements under 49 CFR 1105.8(b).

Board decisions and notices are available at *www.stb.gov.*

Decided: March 30, 2020.

By the Board, Allison C. Davis, Director, Office of Proceedings.

Regena Smith-Bernard,

Clearance Clerk.

[FR Doc. 2020–07015 Filed 4–2–20; 8:45 am]

BILLING CODE 4915–01–P

[1] According to RCRY, the lease also includes the runaround track and all tracks comprising Upper Yard that are related to the Raritan Industrial Track, and Track Nos. 1–10 of Metuchen Yard and the Metuchen Yard Lead. RCRY states that these tracks are excepted under 49 U.S.C. 10906.

DEPARTMENT OF TRANSPORTATION

Federal Aviation Administration

Notice of Availability of the Federal Aviation Administration Finding of No Significant Impact and Record of Decision for Establishing the Playas Temporary Military Operations Area, and the Adoption of the United States Air Force, Davis-Monthan Air Force Base Personnel Recovery Training Program Environmental Assessment

AGENCY: Federal Aviation Administration, Department of Transportation.

ACTION: Notice of availability of finding of no significant impact/record of decision.

SUMMARY: The Federal Aviation Administration (FAA) announces its decision to adopt the United States Air Force (USAF) Environmental Assessment (EA) for the Davis-Monthan Air Force Base Personnel Recovery Training Program for the establishment of a Temporary Military Operations Area (TMOA) in Playas, New Mexico. This notice announces that, based on its independent review and evaluation of the EA and supporting documents, the FAA is adopting the EA and issuing a Finding of No Significant Impact (FONSI)/Record of Decision (ROD) for the establishment of the Playas TMOA.

FOR FURTHER INFORMATION CONTACT: Paula Miller, Airspace Policy and Regulations Group, Office of Airspace Services, Federal Aviation Administration, 800 Independence Avenue SW, Washington, DC 20591; telephone: (202) 267–7378.

SUPPLEMENTARY INFORMATION:

Background

A TMOA is needed to support large force personnel recovery training events, known as Red Flag-Rescue, to ensure combat forces have gained experience operating jointly before deploying to theater. The Red Flag-Rescue training events provide the Department of Defense (DoD) personnel recovery forces combat search and rescue missions in a large force training event simulating deployed conditions. The Red Flag-Rescue training events encompass many different types of land-based and airspace exercises over several states. The subject FAA FONSI/ROD is only for the activation of the Playas TMOA over Playas, New Mexico, for a specific exercise within the Red Flag-Rescue.

Implementation

After evaluating the EA, the FAA has issued a FONSI/ROD to establish the Playas TMOA for separate Red Flag-Rescue training events. Each training event is anticipated to last approximately two to three weeks. The TMOA would only be used during a specified timeframe during each Red Flag-Rescue training event with specific times of use announced via Notice to Airmen (NOTAM). The TMOA would only be activated during an approximate two to three week period, biannually, for up to four years. The total activation period would not exceed 45 days. The actual times of use of activation would vary from continuous to day-night windows, scheduled to meet training requirements.

In accordance with Section 102 of the National Environmental Policy Act of 1969 (''NEPA''), the Council on Environmental Quality's (''CEQ'') regulations implementing NEPA (40 CFR parts 1500–1508), and other applicable authorities, including the FAA Order 1050.1F, Environmental Impacts: Policies and Procedures, paragraph 8–2, and FAA Order JO 7400.2M, ''Procedures for Handling Airspace Matters,'' paragraph 32–2–3, the FAA has conducted an independent review and evaluation of the USAF's EA, dated February 2020, and its supporting documents. As a cooperating agency with responsibility for approving special use airspace (SUA) under 49 U.S.C. 40103(b)(3)(A), the FAA provided subject matter expertise and coordinated with the USAF during the environmental review process.

The Draft EA was provided for public review for 36 days starting on September 20, 2019, and ending on October 26, 2019. Fourteen comments were received on the Draft EA during this time period; however, only one comment received was specific to the FAA's Proposed Action, and it requested clarification of the Proposed Action.

The FONSI/ROD and EA are available upon request by contacting Paula Miller at: Airspace Policy and Regulations Group, Office of Airspace Services, Federal Aviation Administration, 800 Independence Avenue SW, Washington, DC 20591; telephone: (202) 267–7378.

Issued in Des Moines, WA, on March 30, 2020.

Shawn M. Kozica,

Manager, Operations Support Group, Western Service Center.

[FR Doc. 2020–06935 Filed 4–2–20; 8:45 am]

BILLING CODE 4910–13–P

DEPARTMENT OF TRANSPORTATION

Federal Motor Carrier Safety Administration

[Docket No. FMCSA–2020–0081]

Inspection, Repair and Maintenance; Inspector Qualifications; Application for an Exemption From the Intermodal Association of North America (IANA)

AGENCY: Federal Motor Carrier Safety Administration (FMCSA), DOT.

ACTION: Notice of application for exemption; request for comments.

SUMMARY: The Federal Motor Carrier Safety Administration (FMCSA) requests public comment on an application from the Intermodal Association of North America (IANA) for an exemption from the Federal Motor Carrier Safety Regulations (FMCSRs) that would allow an individual who successfully completes a training program consistent with a set of Intermodal Recommended Practices (IRPs) developed by IANA to be considered a qualified inspector for purposes of the periodic inspection rule, or a qualified brake inspector, for purposes of the brake system inspection, repair and maintenance requirements.

DATES: Comments must be received on or before May 4, 2020.

ADDRESSES: You may submit comments bearing the Federal Docket Management System (FDMS) Docket ID FMCSA–2020–0081 using any of the following methods:

- *Website: http://www.regulations.gov.* Follow the instructions for submitting comments on the Federal electronic docket site.
- *Fax:* 1–202–493–2251.
- *Mail:* Docket Management Facility, U.S. Department of Transportation, Room W12–140, 1200 New Jersey Avenue SE, Washington, DC 20590–0001.
- *Hand Delivery:* Ground Floor, Room W12–140, DOT Building, 1200 New Jersey Avenue SE, Washington, DC, between 9 a.m. and 5 p.m. e.t., Monday–Friday, except Federal holidays.

Instructions: All submissions must include the Agency name and docket number for this notice. For detailed instructions on submitting comments and additional information on the exemption process, see the ''Public Participation'' heading below. Note that all comments received will be posted without change to *http://www.regulations.gov,* including any personal information provided. Please see the ''Privacy Act'' heading for further information.

Docket: For access to the docket to read background documents or comments received, go to *http://www.regulations.gov* or to Room W12–140, DOT Building, 1200 New Jersey Avenue SE, Washington, DC, between 9 a.m. and 5 p.m., Monday through Friday, except Federal holidays.

Privacy Act: In accordance with 5 U.S.C. 553(c), DOT solicits comments from the public to better inform its rulemaking process. DOT posts these comments, without edit, including any personal information the commenter provides, to *www.regulations.gov,* as described in the system of records notice (DOT/ALL–14 FDMS), which can be reviewed at *www.dot.gov/privacy.*

Public participation: http://www.regulations.gov website is generally available 24 hours each day, 365 days each year. You may find electronic submission and retrieval help and guidelines under the ''help'' section of the *http://www.regulations.gov* website as well as the DOT's *http://docketsinfo.dot.gov* website. If you would like notification that we received your comments, please include a self-addressed, stamped envelope or postcard or print the acknowledgment page that appears after submitting comments online.

FOR FURTHER INFORMATION CONTACT: Mr. Luke Loy, Vehicle and Roadside Operations Division, Office of Carrier, Driver, and Vehicle Safety, MC–PSV, (202) 366–0676, Federal Motor Carrier Safety Administration, 1200 New Jersey Avenue SE, Washington, DC 20590–0001.

SUPPLEMENTARY INFORMATION:

Background

Under 49 CFR 381.315(a), FMCSA must publish a notice of each exemption request in the **Federal Register**. The Agency must provide the public with an opportunity to inspect the information relevant to the application, including any safety analyses that have been conducted. The Agency must also provide an opportunity for public comment on the request.

The Agency reviews the safety analyses and the public comments and determines whether granting the exemption would likely achieve a level of safety equivalent to or greater than the level that would be achieved by the current regulation (49 CFR 381.305). The decision of the Agency must be published in the **Federal Register** (49 CFR 381.315(b)). If the Agency denies the request, it must state the reason for doing so. If the decision is to grant the exemption, the notice must specify the person or class of persons receiving the exemption and the regulatory provision or provisions from which an exemption is granted. The notice must specify the effective period of the exemption (up to 5 years) and explain the terms and conditions of the exemption. The exemption may be renewed (49 CFR 381.315(c) and 49 CFR 381.300(b)).

IANA Application for Exemption

The FMCSRs require individuals performing (1) annual inspections of commercial motor vehicles (CMVs) under 49 CFR 396.17, or (2) inspections, maintenance, repairs, or service to the brake systems on CMVs under § 396.25, to be properly qualified to perform such inspections. Under §§ 396.19(a)(3)(ii) and 396.25(d)(3)(ii), an individual who has a combination of training or experience totaling at least 1 year as outlined in those sections is considered to be qualified to conduct those inspections. IANA has applied for an exemption to allow a chassis mechanic who has successfully completed a training program consistent with IANA's IRPs to be a qualified inspector or qualified brake inspector without having the required 1 year of training or experience. A copy of the application is included in the docket referenced at the beginning of this notice.

Request for Comments

In accordance with 49 U.S.C. 31315(b)(6), FMCSA requests public comment from all interested persons on IANA's application for an exemption from §§ 396.19(a)(3)(ii) and 396.25(d)(3)(ii) of the FMCSRs. All comments received before the close of business on the comment closing date indicated at the beginning of this notice will be considered and will be available for examination in the docket at the location listed under the ''Addresses'' section of this notice. Comments received after the comment closing date will be filed in the public docket and will be considered to the extent practicable. In addition to late comments, FMCSA will also continue to file, in the public docket, relevant information that becomes available after the comment closing date. Interested persons should continue to examine the public docket for new material.

Larry W. Minor,

Associate Administrator for Policy.

[FR Doc. 2020–06886 Filed 4–2–20; 8:45 am]

BILLING CODE 4910–EX–P

DEPARTMENT OF TRANSPORTATION

Maritime Administration

[Docket No. MARAD–2020–0060]

Requested Administrative Waiver of the Coastwise Trade Laws: Vessel WIDGEON (Motor Vessel); Invitation for Public Comments

AGENCY: Maritime Administration, DOT.

ACTION: Notice.

SUMMARY: The Secretary of Transportation, as represented by the Maritime Administration (MARAD), is authorized to grant waivers of the U.S.-build requirements of the coastwise trade laws to allow the carriage of no more than twelve passengers for hire on vessels, which are three years old or more. A request for such a waiver has been received by MARAD. The vessel, and a brief description of the proposed service, is listed below.

DATES: Submit comments on or before May 4, 2020.

ADDRESSES: You may submit comments identified by DOT Docket Number MARAD–2020–0060 by any one of the following methods:

- *Federal eRulemaking Portal:* Go to *http://www.regulations.gov.* Search MARAD–2020–0060 and follow the instructions for submitting comments.
- *Mail or Hand Delivery:* Docket Management Facility is in the West Building, Ground Floor of the U.S. Department of Transportation. The Docket Management Facility location address is: U.S. Department of Transportation, MARAD–2020–0060, 1200 New Jersey Avenue SE, West Building, Room W12–140, Washington, DC 20590, between 9 a.m. and 5 p.m., Monday through Friday, except on Federal holidays.

Note: If you mail or hand-deliver your comments, we recommend that you include your name and a mailing address, an email address, or a telephone number in the body of your document so that we can contact you if we have questions regarding your submission.

Instructions: All submissions received must include the agency name and specific docket number. All comments received will be posted without change to the docket at *www.regulations.gov,* including any personal information provided. For detailed instructions on submitting comments, see the section entitled Public Participation.

FOR FURTHER INFORMATION CONTACT: Bianca Carr, U.S. Department of Transportation, Maritime Administration, 1200 New Jersey

Avenue SE, Room W23–453, Washington, DC 20590. Telephone 202–366–9309, Email *Bianca.carr@dot.gov.*

SUPPLEMENTARY INFORMATION: As described by the applicant the intended service of the vessel WIDGEON is:

—INTENDED COMMERCIAL USE OF VESSEL: ''Our company consists of two owners and a occasional part-time employee. The vessel will be carrying work personnel and moving our own equipment inside marinas, ports and harbors.''

—GEOGRAPHIC REGION INCLUDING BASE OF OPERATIONS: ''Michigan'' (Base of Operations: Traverse City, MI).

—VESSEL LENGTH AND TYPE: 35' motor vessel.

The complete application is available for review identified in the DOT docket as MARAD–2020–0060 at *http://www.regulations.gov.* Interested parties may comment on the effect this action may have on U.S. vessel builders or businesses in the U.S. that use U.S.-flag vessels. If MARAD determines, in accordance with 46 U.S.C. 12121 and MARAD's regulations at 46 CFR part 388, that the issuance of the waiver will have an unduly adverse effect on a U.S.-vessel builder or a business that uses U.S.-flag vessels in that business, a waiver will not be granted. Comments should refer to the vessel name, state the commenter's interest in the waiver application, and address the waiver criteria given in section 388.4 of MARAD's regulations at 46 CFR part 388.

Public Participation

How do I submit comments?

Please submit your comments, including the attachments, following the instructions provided under the above heading entitled **ADDRESSES**. Be advised that it may take a few hours or even days for your comment to be reflected on the docket. In addition, your comments must be written in English. We encourage you to provide concise comments and you may attach additional documents as necessary. There is no limit on the length of the attachments.

Where do I go to read public comments, and find supporting information?

Go to the docket online at *http://www.regulations.gov.,* keyword search MARAD–2020–0060 or visit the Docket Management Facility (see **ADDRESSES** for hours of operation). We recommend that you periodically check the Docket for new submissions and supporting material.

Will my comments be made available to the public?

Yes. Be aware that your entire comment, including your personal identifying information, will be made publicly available.

May I submit comments confidentially?

If you wish to submit comments under a claim of confidentiality, you should submit three copies of your complete submission, including the information you claim to be confidential business information, to the Department of Transportation, Maritime Administration, Office of Legislation and Regulations, MAR–225, W24–220, 1200 New Jersey Avenue SE, Washington, DC 20590. Include a cover letter setting forth with specificity the basis for any such claim and, if possible, a summary of your submission that can be made available to the public.

Privacy Act

In accordance with 5 U.S.C. 553(c), DOT solicits comments from the public to better inform its rulemaking process. DOT posts these comments, without edit, to *www.regulations.gov,* as described in the system of records notice, DOT/ALL–14 FDMS, accessible through *www.dot.gov/privacy.* To facilitate comment tracking and response, we encourage commenters to provide their name, or the name of their organization; however, submission of names is completely optional. Whether or not commenters identify themselves, all timely comments will be fully considered. If you wish to provide comments containing proprietary or confidential information, please contact the agency for alternate submission instructions.

(Authority: 49 CFR 1.93(a), 46 U.S.C. 55103, 46 U.S.C. 12121)

Dated: March 31, 2020.

By Order of the Maritime Administrator.

T. Mitchell Hudson, Jr.,

Secretary, Maritime Administration.

[FR Doc. 2020–07004 Filed 4–2–20; 8:45 am]

BILLING CODE 4910–81–P

DEPARTMENT OF TRANSPORTATION

Maritime Administration

[Docket No. MARAD–2020–0058]

Requested Administrative Waiver of the Coastwise Trade Laws: Vessel MASTIVIA (Motor Vessel); Invitation for Public Comments

AGENCY: Maritime Administration, DOT.

ACTION: Notice.

SUMMARY: The Secretary of Transportation, as represented by the Maritime Administration (MARAD), is authorized to grant waivers of the U.S.-build requirements of the coastwise trade laws to allow the carriage of no more than twelve passengers for hire on vessels, which are three years old or more. A request for such a waiver has been received by MARAD. The vessel, and a brief description of the proposed service, is listed below.

DATES: Submit comments on or before May 4, 2020.

ADDRESSES: You may submit comments identified by DOT Docket Number MARAD–2020–0058 by any one of the following methods:

- *Federal eRulemaking Portal:* Go to *http://www.regulations.gov.* Search MARAD–2020–0058 and follow the instructions for submitting comments.
- *Mail or Hand Delivery:* Docket Management Facility is in the West Building, Ground Floor of the U.S. Department of Transportation. The Docket Management Facility location address is: U.S. Department of Transportation, MARAD–2020–0058, 1200 New Jersey Avenue SE, West Building, Room W12–140, Washington, DC 20590, between 9 a.m. and 5 p.m., Monday through Friday, except on Federal holidays.

Note: If you mail or hand-deliver your comments, we recommend that you include your name and a mailing address, an email address, or a telephone number in the body of your document so that we can contact you if we have questions regarding your submission.

Instructions: All submissions received must include the agency name and specific docket number. All comments received will be posted without change to the docket at *www.regulations.gov,* including any personal information provided. For detailed instructions on submitting comments, see the section entitled Public Participation.

FOR FURTHER INFORMATION CONTACT: Bianca Carr, U.S. Department of Transportation, Maritime Administration, 1200 New Jersey Avenue SE, Room W23–453, Washington, DC 20590. Telephone 202–366–9309, Email *Bianca.carr@dot.gov.*

SUPPLEMENTARY INFORMATION: As described by the applicant the intended service of the vessel MASTIVIA is:

—INTENDED COMMERCIAL USE OF VESSEL: ''carrying passengers for hire with a captain for charters for the purposes of sightseeing cruises, dinner cruises and weekly charters''

—GEOGRAPHIC REGION INCLUDING BASE OF OPERATIONS: ''Maine, Massachusetts, Rhode Island, Connecticut, New York (excluding

New York Harbor) Georgia, Florida'' (Base of Operations: Miami, FL)

—VESSEL LENGTH AND TYPE: 64′ motor vessel.

The complete application is available for review identified in the DOT docket as MARAD–2020–0058 at *http://www.regulations.gov.* Interested parties may comment on the effect this action may have on U.S. vessel builders or businesses in the U.S. that use U.S.-flag vessels. If MARAD determines, in accordance with 46 U.S.C. 12121 and MARAD's regulations at 46 CFR part 388, that the issuance of the waiver will have an unduly adverse effect on a U.S.-vessel builder or a business that uses U.S.-flag vessels in that business, a waiver will not be granted. Comments should refer to the vessel name, state the commenter's interest in the waiver application, and address the waiver criteria given in section 388.4 of MARAD's regulations at 46 CFR part 388.

Public Participation

How do I submit comments?

Please submit your comments, including the attachments, following the instructions provided under the above heading entitled **ADDRESSES**. Be advised that it may take a few hours or even days for your comment to be reflected on the docket. In addition, your comments must be written in English. We encourage you to provide concise comments and you may attach additional documents as necessary. There is no limit on the length of the attachments.

Where do I go to read public comments, and find supporting information?

Go to the docket online at *http://www.regulations.gov.,* keyword search MARAD–2020–0058 or visit the Docket Management Facility (see **ADDRESSES** for hours of operation). We recommend that you periodically check the Docket for new submissions and supporting material.

Will my comments be made available to the public?

Yes. Be aware that your entire comment, including your personal identifying information, will be made publicly available.

May I submit comments confidentially?

If you wish to submit comments under a claim of confidentiality, you should submit three copies of your complete submission, including the information you claim to be confidential business information, to the Department of Transportation, Maritime Administration, Office of Legislation and Regulations, MAR–225, W24–220, 1200 New Jersey Avenue SE, Washington, DC 20590. Include a cover letter setting forth with specificity the basis for any such claim and, if possible, a summary of your submission that can be made available to the public.

Privacy Act

In accordance with 5 U.S.C. 553(c), DOT solicits comments from the public to better inform its rulemaking process. DOT posts these comments, without edit, to *www.regulations.gov,* as described in the system of records notice, DOT/ALL–14 FDMS, accessible through *www.dot.gov/privacy.* To facilitate comment tracking and response, we encourage commenters to provide their name, or the name of their organization; however, submission of names is completely optional. Whether or not commenters identify themselves, all timely comments will be fully considered. If you wish to provide comments containing proprietary or confidential information, please contact the agency for alternate submission instructions.

(Authority: 49 CFR 1.93(a), 46 U.S.C. 55103, 46 U.S.C. 12121)

Dated: March 31, 2020.

By Order of the Maritime Administrator.

T. Mitchell Hudson, Jr.,

Secretary, Maritime Administration.

[FR Doc. 2020–07002 Filed 4–2–20; 8:45 am]

BILLING CODE 4910–81–P

DEPARTMENT OF TRANSPORTATION

Maritime Administration

[Docket No. MARAD–2020–0059]

Requested Administrative Waiver of the Coastwise Trade Laws: Vessel MOBY (Sailboat); Invitation for Public Comments

AGENCY: Maritime Administration, DOT.

ACTION: Notice.

SUMMARY: The Secretary of Transportation, as represented by the Maritime Administration (MARAD), is authorized to grant waivers of the U.S.-build requirements of the coastwise trade laws to allow the carriage of no more than twelve passengers for hire on vessels, which are three years old or more. A request for such a waiver has been received by MARAD. The vessel, and a brief description of the proposed service, is listed below.

DATES: Submit comments on or before May 4, 2020.

ADDRESSES: You may submit comments identified by DOT Docket Number MARAD–2020–0059 by any one of the following methods:

- *Federal eRulemaking Portal:* Go to *http://www.regulations.gov.* Search MARAD–2020–0059 and follow the instructions for submitting comments.
- *Mail or Hand Delivery:* Docket Management Facility is in the West Building, Ground Floor of the U.S. Department of Transportation. The Docket Management Facility location address is: U.S. Department of Transportation, MARAD–2020–0059, 1200 New Jersey Avenue SE, West Building, Room W12–140, Washington, DC 20590, between 9 a.m. and 5 p.m., Monday through Friday, except on Federal holidays.

Note: If you mail or hand-deliver your comments, we recommend that you include your name and a mailing address, an email address, or a telephone number in the body of your document so that we can contact you if we have questions regarding your submission.

Instructions: All submissions received must include the agency name and specific docket number. All comments received will be posted without change to the docket at *www.regulations.gov,* including any personal information provided. For detailed instructions on submitting comments, see the section entitled Public Participation.

FOR FURTHER INFORMATION CONTACT: Bianca Carr, U.S. Department of Transportation, Maritime Administration, 1200 New Jersey Avenue SE, Room W23–453, Washington, DC 20590. Telephone 202–366–9309, Email *Bianca.carr@dot.gov.*

SUPPLEMENTARY INFORMATION: As described by the applicant the intended service of the vessel MOBY is:

—INTENDED COMMERCIAL USE OF VESSEL: ''Primarily this vessel will be used for charters off American states on the Gulf of Mexico coast including the keys. Also the coastlines of Lake Michigan, Ohio, Indiana, Illinois and Wisconsin''

—GEOGRAPHIC REGION INCLUDING BASE OF OPERATIONS: ''Florida, Alabama, Mississippi, Louisiana, Texas, Michigan, Ohio, Indiana, Illinois, Wisconsin.'' (Base of Operations: Muskegon, MI)

—VESSEL LENGTH AND TYPE: 72′ sailboat

The complete application is available for review identified in the DOT docket as MARAD–2020–0059 at *http://www.regulations.gov.* Interested parties may comment on the effect this action may have on U.S. vessel builders or businesses in the U.S. that use U.S.-flag

vessels. If MARAD determines, in accordance with 46 U.S.C. 12121 and MARAD's regulations at 46 CFR part 388, that the issuance of the waiver will have an unduly adverse effect on a U.S.-vessel builder or a business that uses U.S.-flag vessels in that business, a waiver will not be granted. Comments should refer to the vessel name, state the commenter's interest in the waiver application, and address the waiver criteria given in section 388.4 of MARAD's regulations at 46 CFR part 388.

Public Participation

How do I submit comments?

Please submit your comments, including the attachments, following the instructions provided under the above heading entitled **ADDRESSES**. Be advised that it may take a few hours or even days for your comment to be reflected on the docket. In addition, your comments must be written in English. We encourage you to provide concise comments and you may attach additional documents as necessary. There is no limit on the length of the attachments.

Where do I go to read public comments, and find supporting information?

Go to the docket online at *http://www.regulations.gov.,* keyword search MARAD–2020–0059 or visit the Docket Management Facility (see **ADDRESSES** for hours of operation). We recommend that you periodically check the Docket for new submissions and supporting material.

Will my comments be made available to the public?

Yes. Be aware that your entire comment, including your personal identifying information, will be made publicly available.

May I submit comments confidentially?

If you wish to submit comments under a claim of confidentiality, you should submit three copies of your complete submission, including the information you claim to be confidential business information, to the Department of Transportation, Maritime Administration, Office of Legislation and Regulations, MAR–225, W24–220, 1200 New Jersey Avenue SE, Washington, DC 20590. Include a cover letter setting forth with specificity the basis for any such claim and, if possible, a summary of your submission that can be made available to the public.

Privacy Act

In accordance with 5 U.S.C. 553(c), DOT solicits comments from the public to better inform its rulemaking process. DOT posts these comments, without edit, to *www.regulations.gov,* as described in the system of records notice, DOT/ALL–14 FDMS, accessible through *www.dot.gov/privacy.* To facilitate comment tracking and response, we encourage commenters to provide their name, or the name of their organization; however, submission of names is completely optional. Whether or not commenters identify themselves, all timely comments will be fully considered. If you wish to provide comments containing proprietary or confidential information, please contact the agency for alternate submission instructions.

(Authority: 49 CFR 1.93(a), 46 U.S.C. 55103, 46 U.S.C. 12121)

Dated: March 31, 2020.

By Order of the Maritime Administrator.

T. Mitchell Hudson, Jr.,

Secretary, Maritime Administration.

[FR Doc. 2020–07003 Filed 4–2–20; 8:45 am]

BILLING CODE 4910–81–P

DEPARTMENT OF TRANSPORTATION

Maritime Administration

[Docket No. MARAD–2020–0057]

Requested Administrative Waiver of the Coastwise Trade Laws: Vessel CREOLA (Motor Vessel); Invitation for Public Comments

AGENCY: Maritime Administration, DOT.

ACTION: Notice.

SUMMARY: The Secretary of Transportation, as represented by the Maritime Administration (MARAD), is authorized to grant waivers of the U.S.-build requirements of the coastwise trade laws to allow the carriage of no more than twelve passengers for hire on vessels, which are three years old or more. A request for such a waiver has been received by MARAD. The vessel, and a brief description of the proposed service, is listed below.

DATES: Submit comments on or before May 4, 2020.

ADDRESSES: You may submit comments identified by DOT Docket Number MARAD–2020–0057 by any one of the following methods:

- *Federal eRulemaking Portal:* Go to *http://www.regulations.gov.* Search MARAD–2020–0057 and follow the instructions for submitting comments.
- *Mail or Hand Delivery:* Docket Management Facility is in the West Building, Ground Floor of the U.S. Department of Transportation. The Docket Management Facility location address is: U.S. Department of Transportation, MARAD–2020–0057, 1200 New Jersey Avenue SE, West Building, Room W12–140, Washington, DC 20590, between 9 a.m. and 5 p.m., Monday through Friday, except on Federal holidays.

Note: If you mail or hand-deliver your comments, we recommend that you include your name and a mailing address, an email address, or a telephone number in the body of your document so that we can contact you if we have questions regarding your submission.

Instructions: All submissions received must include the agency name and specific docket number. All comments received will be posted without change to the docket at *www.regulations.gov,* including any personal information provided. For detailed instructions on submitting comments, see the section entitled Public Participation.

FOR FURTHER INFORMATION CONTACT: Bianca Carr, U.S. Department of Transportation, Maritime Administration, 1200 New Jersey Avenue SE, Room W23–453, Washington, DC 20590. Telephone 202–366–9309, Email *Bianca.carr@dot.gov.*

SUPPLEMENTARY INFORMATION: As described by the applicant the intended service of the vessel CREOLA is:

—INTENDED COMMERCIAL USE OF VESSEL: ''providing accessibility via a non-profit to local waters for sightseeing and accessibility to these same local waters for disabled persons in wheel chairs''

—GEOGRAPHIC REGION INCLUDING BASE OF OPERATIONS: ''Alabama, Florida, Louisiana'' (Base of Operations: Point Clear, AL)

—VESSEL LENGTH AND TYPE: 37′ motor vessel

The complete application is available for review identified in the DOT docket as MARAD–2020–0057 at *http://www.regulations.gov.* Interested parties may comment on the effect this action may have on U.S. vessel builders or businesses in the U.S. that use U.S.-flag vessels. If MARAD determines, in accordance with 46 U.S.C. 12121 and MARAD's regulations at 46 CFR part 388, that the issuance of the waiver will have an unduly adverse effect on a U.S.-vessel builder or a business that uses U.S.-flag vessels in that business, a waiver will not be granted. Comments should refer to the vessel name, state the commenter's interest in the waiver application, and address the waiver criteria given in section 388.4 of MARAD's regulations at 46 CFR part 388.

Public Participation

How do I submit comments?

Please submit your comments, including the attachments, following the instructions provided under the above heading entitled **ADDRESSES**. Be advised that it may take a few hours or even days for your comment to be reflected on the docket. In addition, your comments must be written in English. We encourage you to provide concise comments and you may attach additional documents as necessary. There is no limit on the length of the attachments.

Where do I go to read public comments, and find supporting information?

Go to the docket online at *http://www.regulations.gov.,* keyword search MARAD–2020–0057 or visit the Docket Management Facility (see **ADDRESSES** for hours of operation). We recommend that you periodically check the Docket for new submissions and supporting material.

Will my comments be made available to the public?

Yes. Be aware that your entire comment, including your personal identifying information, will be made publicly available.

May I submit comments confidentially?

If you wish to submit comments under a claim of confidentiality, you should submit three copies of your complete submission, including the information you claim to be confidential business information, to the Department of Transportation, Maritime Administration, Office of Legislation and Regulations, MAR–225, W24–220, 1200 New Jersey Avenue SE, Washington, DC 20590. Include a cover letter setting forth with specificity the basis for any such claim and, if possible, a summary of your submission that can be made available to the public.

Privacy Act

In accordance with 5 U.S.C. 553(c), DOT solicits comments from the public to better inform its rulemaking process. DOT posts these comments, without edit, to *www.regulations.gov,* as described in the system of records notice, DOT/ALL–14 FDMS, accessible through *www.dot.gov/privacy.* To facilitate comment tracking and response, we encourage commenters to provide their name, or the name of their organization; however, submission of names is completely optional. Whether or not commenters identify themselves, all timely comments will be fully considered. If you wish to provide comments containing proprietary or confidential information, please contact the agency for alternate submission instructions.

(Authority: 49 CFR 1.93(a), 46 U.S.C. 55103, 46 U.S.C. 12121)

Dated: March 31, 2020.

By Order of the Maritime Administrator.

T. Mitchell Hudson, Jr.,

Secretary, Maritime Administration.

[FR Doc. 2020–07001 Filed 4–2–20; 8:45 am]

BILLING CODE 4910–81–P

DEPARTMENT OF THE TREASURY

Community Development Financial Institutions Fund

Funding Opportunity Title: Notice of Funds Availability (NOFA) inviting Applications for the Fiscal Year (FY) 2020 Funding Round of the Bank Enterprise Award Program (BEA Program).

Announcement Type: Announcement of funding opportunity.

Funding Opportunity Number: CDFI–2020–BEA

Catalog of Federal Domestic Assistance (CFDA) Number: 21.021

Dates:

TABLE 1—FY 2020 BEA PROGRAM FUNDING ROUND—KEY DATES FOR APPLICANTS

Description	Deadline	Time (Eastern Time—ET)	Contact information
Grant Application Package/SF–424 Mandatory (Application for Federal Assistance). *Submission Method: Electronically via Grants.gov*	May 4, 2020	11:59 p.m.	Contact *Grants.gov* at 800–518–4726 or *support@grants.gov.*
Last day to register a user and organization in AMIS	June 1, 2020	5:00 p.m.	CDFI Fund IT Helpdesk: 202–653–0422 or IT Award Management Information System (AMIS) Service Request [1]
Last day to enter, edit or delete BEA transactions, and verify addresses/census tracts in AMIS.	June 1, 2020	5:00 p.m.	CDFI Fund IT Helpdesk: 202–653–0422 or IT AMIS Service Request [2]
Last day to contact BEA Program Staff re: BEA Program Application materials.	June 1, 2020	5:00 p.m.	CDFI Fund BEA Helpdesk: 202–653–0421 or BEA AMIS Service Request.[3]
Last day to contact Certification, Compliance Monitoring and Evaluation (CCME) staff.	June 1, 2020	5:00 p.m.	CCME Helpdesk: 202–653–0423 or Compliance and Reporting AMIS Service Request.[4]
Last day to contact IT Help Desk re. AMIS support and submission of the FY 2020 BEA Program Electronic Application in AMIS.	June 3, 2020	5:00 p.m.	CDFI Fund IT Helpdesk: 202–653–0421 or IT AMIS Service Request.[5]
FY 2020 BEA Program Electronic Application ..... *Submission Method: Electronically via AMIS*	June 3, 2020	5:00 pm	CDFI Fund IT Helpdesk: 202–653–0422 or IT AMIS Service Request.[6]

[1] For Information Technology support, the preferred method of contact is to submit a Service Request (SR) within AMIS. For the SR, select ''Technical Issues'' from the Program drop down menu.

[2] Ibid.

[3] For questions regarding completion of the BEA Application materials, the preferred electronic method of contact with the BEA Program Office is to submit a Service Request (SR) within AMIS. For the SR, select ''BEA Program'' from the Program drop down menu of the Service Request.

[4] For Compliance and Reporting related questions, the preferred electronic method of contact is to submit a Service Request (SR) within AMIS. For the SR, select ''Compliance and Reporting'' from the Program drop down menu of the Service Request.

[5] For Information Technology support, the preferred method of contact is to submit a Service Request (SR) within AMIS. For the SR, select ''Technical Issues'' from the Program drop down menu of the Service Request.

[6] Ibid.

Executive Summary: This NOFA is issued in connection with the fiscal year (FY) 2020 funding round of the Bank Enterprise Award Program (BEA Program). The BEA Program is administered by the U.S. Department of

the Treasury's Community Development Financial Institutions Fund (CDFI Fund). Through the BEA Program, the CDFI Fund awards formula-based grants to depository institutions that are insured by the Federal Deposit Insurance Corporation (FDIC) for increasing their levels of loans, investments, Service Activities, and technical assistance to residents and businesses in the most economically Distressed Communities, and financial assistance and technical assistance to certified Community Development Financial Institutions (CDFIs) through equity investments, equity-like loans, grants, stock purchases, loans, deposits, and other forms of assistance, during a specified period.

I. Program Description

A. *History:* The CDFI Fund was established by the Riegle Community Development and Regulatory Improvement Act of 1994 to promote economic revitalization and community development through investment in and assistance to CDFIs. Since its creation in 1994, the CDFI Fund has provided more than $3.5 billion through a variety of monetary awards programs to CDFIs, community development organizations, and financial institutions. In addition, the CDFI Fund has allocated $57.5 billion in tax credit allocation authority to Community Development Entities through the New Markets Tax Credit Program (NMTC Program), and has guaranteed more than $1.6 billion in bonds through the CDFI Bond Guarantee Program.

The BEA Program complements the community development activities of banks and thrifts (collectively referred to as banks for purposes of this NOFA), by providing financial incentives to expand investments in CDFIs and to increase lending, investment, and Service Activities within Distressed Communities. Providing monetary awards to banks for increasing their community development activities leverages the CDFI Fund's dollars and puts more capital to work in Distressed Communities throughout the nation.

B. *Authorizing Statutes and Regulations:* The BEA Program was authorized by the Bank Enterprise Award Act of 1991, as amended. The regulations governing the BEA Program can be found at 12 CFR part 1806 (the Interim Rule). The Interim Rule provides the evaluation criteria and other requirements of the BEA Program. Detailed BEA Program requirements are also found in the application materials associated with this NOFA (the Application). The CDFI Fund encourages interested parties and Applicants to review the authorizing statute, Interim Rule, this NOFA, the Application, and the Uniform Administrative Requirements, Cost Principles, and Audit Requirements for Federal Awards (Uniform Requirements) for a complete understanding of the Program. Capitalized terms in this NOFA are defined in the authorizing statute, the Interim Rule, this NOFA, the Application, or the Uniform Requirements. Details regarding Application content requirements are found in the Application and related materials. Application materials can be found on *Grants.gov* and the CDFI Fund's website at *www.cdfifund.gov/bea.*

C. *Uniform Administrative Requirements, Cost Principles, and Audit Requirements for Federal Awards (2 CFR part 200):* The Uniform Administrative Requirements codify financial, administrative, procurement, and program management standards that Federal award-making agencies and Award Recipients must follow. When evaluating award applications, awarding agencies must evaluate the risks to the program posed by each Applicant, and each Applicant's merits and eligibility. These requirements are designed to ensure that Applicants for Federal assistance receive a fair and consistent review prior to an award decision. This review will assess items such as the Applicant's financial stability, quality of management systems, history of performance, and audit findings. In addition, the Uniform Requirements include guidance on audit requirements and other award requirements with which Award Recipients must comply.

D. *Priorities:* Through the BEA Program, the CDFI Fund specifies the following priorities:

1. Estimated Award Amounts: The award percentage used to derive the estimated award amount for Applicants that are CDFIs is three times greater than the award percentage used to derive the estimated award amount for Applicants that are not CDFIs;

2. Priority Factors: Priority Factors will be assigned based on an Applicant's asset size, as described in Section V.A.14 of this NOFA (Application Review Information: Priority Factors); and

3. Priority of Awards: The CDFI Fund will rank Applicants in each category of Qualified Activity according to the priorities described in Section V.A.16. of this NOFA (Application Review Information: Award Percentages, Award Amounts, Application Review Process, Selection Process, Programmatic Financial Risk, and Application Rejection), and specifically parts V.B.2: Selection Process, V.B.3: Programmatic and Financial Risk, and V.B.4: Persistent Poverty Counties.

E. *Baseline Period and Assessment Period Dates:* A BEA Program Award is based on an Applicant's increase in Qualified Activities from the Baseline Period to the Assessment Period, as reported on an individual transaction basis in the Application. For the FY 2020 funding round, the Baseline Period is calendar year 2018 (January 1, 2018 through December 31, 2018), and the Assessment Period is calendar year 2019 (January 1, 2019 through December 31, 2019).

F. *Funding Limitations:* The CDFI Fund reserves the right to fund, in whole or in part, any, all, or none of the Applications submitted in response to this NOFA. The CDFI Fund also reserves the right to reallocate funds from the amount that is available through this NOFA to other CDFI Fund programs, or to reallocate remaining funds to a future BEA Program funding round, particularly if the CDFI Fund determines that the number of awards made through this NOFA is fewer than projected.

G. *Persistent Poverty Counties:* Pursuant to the Consolidated Appropriations Act, 2020 (Public Law Number 116–93), Congress mandated that at least ten percent of the CDFI Fund's appropriations be directed to counties that meet the criteria for ''Persistent Poverty'' designation. Persistent Poverty Counties (PPCs) are defined as any county, including county equivalent areas in Puerto Rico, that has had 20 percent or more of its population living in poverty over the past 30 years, as measured by the 1990 and 2000 decennial censuses, and the 2011–2015 5-year data series available from the American Community Survey of the Census Bureau or any other territory or possession of the United States that has had 20 percent or more of its population living in poverty over the past 30 years, as measured by the 1990, 2000 and 2010 Island Areas Decennial Censuses, or equivalent data, of the Bureau of the Census and published by the CDFI Fund at: *https://www.cdfifund.gov/Documents/PPC%20updated%20Oct.2017.xlsx.* The tabular BEA Program Eligibility Data, which is located on the CDFI Fund's website, indicates whether a census tract also meets ''Persistent Poverty County'' (PPC) criteria. The tabular BEA Program Eligibility Data can be located by clicking on ''Research and Data,'' scrolling to ''Program Eligibility Guidance'' and selecting ''BEA Program Updated 2011–2015 ACS Data,'' or by

going to the following hyperlink: *https://www.cdfifund.gov/Documents/BEA%20ACS_2015_V12.xlsx.* Applicants that apply under this NOFA will be required to indicate the minimum and maximum percentage of the BEA Program Award that the Applicant will commit to investing in PPCs.

II. Federal Award Information

A. *Funding Availability:* The CDFI Fund expects to award up to $25 million for the FY 2020 BEA Program Awards round under this NOFA. The CDFI Fund reserves the right to award in excess of said funds under this NOFA, provided that the appropriated funds are available. The CDFI Fund reserves the right to impose a minimum or maximum award amount; however, under no circumstances will an award be higher than $1 million for any Award Recipient.

B. *Types of Awards:* BEA Program Awards are made in the form of grants.

C. *Anticipated Start Date and Period of Performance:* The CDFI Fund anticipates the period of performance for the FY 2020 funding round will begin in the fall of calendar year 2020. Specifically, the period of performance begins on the Federal Award Date and will conclude at least one (1) full year after the Federal Award Date as further specified in the BEA Program Award Agreement (Award Agreement), during which the Award Recipient must meet the performance goals set forth in the Award Agreement.

D. *Eligible Activities:* Eligible activities for BEA Program Applicants are referred to as Qualified Activities and are defined in the Interim Rule to include CDFI Related Activities, Distressed Community Financing Activities, and Service Activities (12 CFR 1806.103). CDFI Related Activities (12 CFR 1806.103) means CDFI Equity and CDFI Support Activities. CDFI Equity consists of Equity Investments, Equity-Like Loans, and Grants. CDFI Support Activities includes Loans, Deposits and Technical Assistance.

Distressed Community Financing Activities (12 CFR 1806.103) means Consumer Loans and Commercial Loans and Investments. Consumer Loans include Affordable Housing Loans; Education Loans; Home Improvement Loans; and Small Dollar Consumer Loans. Commercial Loans and Investments includes Affordable Housing Development Loans and related Project Investments; Commercial Real Estate Loans and related Project Investments; and Small Business Loans and related Project Investments. Service Activities (12 CFR 1806.103) include Deposit Liabilities, Financial Services, Community Services, Targeted Financial Services, and Targeted Retail Savings/Investment Products.

When calculating BEA Program Award amounts, the CDFI Fund will only consider the amount of a Qualified Activity that has been fully disbursed or, in the case of a partially disbursed Qualified Activity, will only consider the amount that an Applicant reasonably expects to disburse for a Qualified Activity within 12 months from the end of the Assessment Period. Subject to the requirements outlined in Section VI. of this NOFA, in the case of Commercial Real Estate Loans and related Project Investments, the total principal amount of the transaction must be $10 million or less to be considered a Qualified Activity. Notwithstanding the foregoing, the CDFI Fund, in its sole discretion, may consider transactions with a total principal value of over $10 million, subject to review.

An activity funded with prior BEA Program Award dollars, or funded to satisfy requirements of an Award Agreement from a prior BEA Program award or an agreement under any CDFI Fund program, shall not constitute a Qualified Activity for the purposes of calculating or receiving an award.

E. *Distressed Community:* A Distressed Community must meet certain minimum geographic area and eligibility requirements, which are defined in the Interim Rule at 12 CFR 1806.103 and more fully described in 12 CFR 1806.401. Applicants should use the CDFI Fund's Information Mapping System (CIMS Mapping Tool) to determine whether a Baseline Period activity or Assessment Period activity is located in a qualified Distressed Community. The CIMS Mapping Tool can be accessed through AMIS or the CDFI Fund's website at *https://www.cdfifund.gov/Pages/mapping-system.aspx.* The CIMS Mapping Tool contains a step-by-step training manual on how to use the tool. In addition, further instructions to determine whether an activity is located in a qualified BEA Distressed Community can be located at: *https://www.cdfifund.gov/programs-training/Programs/bank_enterprise_award/Pages/apply-step.aspx#,* Step1, when selecting the BEA Program Application CIMS3 Instructions document in the ''Application Materials'' section of the BEA web page on the CDFI Fund's website. If you have any questions or problems with accessing the CIMS Mapping Tool, please contact the CDFI Fund IT Help Desk by telephone at (202) 653–0300, or by IT AMIS Service Request.

Please note that a Distressed Community as defined by the BEA Program is not the same as an Investment Area as defined by the CDFI Program, a Low-Income Community as defined by the NMTC Program, or an Area of Economic Distress as defined by the CMF Program.

1. Designation of Distressed Community by a CDFI Partner: CDFI Partners that receive CDFI Support Activities in the form of loans, technical assistance or deposits from an Applicant must be integrally involved in a Distressed Community. Applicants must provide evidence that each CDFI Partner that is the recipient of CDFI Support Activities is integrally involved in a Distressed Community, as noted in the Application. CDFI Partners that receive Equity Investments, Equity-Like Loans or grants are not required to demonstrate Integral Involvement. Additional information on Integral Involvement can be found in Section V. of this NOFA.

2. Distressed Community Determination by a BEA Applicant: Applicants applying for a BEA Program Award for performing Distressed Community Financing Activities or Service Activities must verify that addresses of both Baseline Period and Assessment Period activities are in Distressed Communities when completing their Application.

A BEA Applicant shall determine an area is a Distressed Community by:

a. Selecting a census tract where the Qualified Activity occurred that meets the minimum area and eligibility requirements; or

b. selecting the census tract where the Qualified Activity occurred, plus one or more census tracts directly contiguous to where the Qualified Activity occurred that when considered in the aggregate, meet the minimum area and eligibility requirements set forth in this section.

F. *Award Agreement:* Each Award Recipient under this NOFA must electronically sign an Award Agreement via AMIS prior to payment of the award proceeds by the CDFI Fund. The Award Agreement contains the terms and conditions of the award. For further information, see Section VI. of this NOFA.

G. *Use of Award:* It is the policy of the CDFI Fund that BEA Program Awards may not be used by Award Recipients to recover overhead or Indirect Costs. The Award Recipient may use up to fifteen percent (15%) of the total BEA Program award amount on Qualified Activities as Direct Administrative Expenses. ''Direct Administrative

Expenses'' shall mean Direct Costs, as described in section 2 CFR 200.413 of the Uniform Requirements, which are incurred by the Award Recipient to carry out the Qualified Activities. Such costs must be able to be specifically identified with the Qualified Activities and not also recovered as Indirect Costs. ''Indirect Costs'' means costs or expenses defined in accordance with section 2 CFR 200.56 of the Uniform Requirements. In addition, the Award Recipient must comply, as applicable, with the Buy American Act of 1933, 41 U.S.C. 8301–8303, with respect to any Direct Costs.

III. Eligibility Information

A. *Eligible Applicants:* For the purposes of this NOFA, the following table sets forth the eligibility criteria to receive a BEA Program award from the CDFI Fund.

TABLE 2—ELIGIBILITY REQUIREMENTS FOR APPLICANTS

Criteria	Description
Eligible Applicants	• The depository institution holding company of an Insured Depository Institution may not apply on behalf of an Insured Depository Institution. Applications received from depository institution holding companies will be disqualified. • Eligible Applicants for the BEA Program must be Insured Depository Institutions, as defined in the Interim Rule. • For the FY 2020 funding round, an Applicant must have been FDIC-insured as of the first day of the Baseline Period, January 1, 2018, and maintain its FDIC-insured status at the time of Application to be eligible for consideration for a BEA Program Award under this NOFA. • The depository institution holding company of an Insured Depository Institution may not apply on behalf of an Insured Depository Institution. Applications received from depository institution holding companies will be disqualified.
CDFI Applicant	• For the FY 2020 funding round, an eligible certified-CDFI Applicant is an Insured Depository Institution that was certified as a CDFI as of December 31, 2019 and maintains its status as a certified CDFI at the time BEA Program Awards are announced under this NOFA. No CDFI Applicant may receive a FY 2020 BEA Program Award if it has: (1) An application pending for assistance under the FY 2020 round of the CDFI Program; (2) been included on the list of Award Recipients under the CDFI Program award announcement within the 12-month period prior to the Federal Award Date of the FY 2020 BEA Program Award Agreement; (3) been awarded assistance from the CDFI Fund under the CDFI Program within the 12-month period prior to the Federal Award Date of the FY 2020 BEA Program Award Agreement; or (4) ever received assistance under the CDFI Program for the same activities for which it is seeking a FY 2020 BEA Program Award. Please note that Applicants may apply for both a CDFI Program award and a BEA Program Award in FY 2020; however, receiving a FY 2020 or FY 2019 CDFI Program award removes an Applicant from eligibility for a FY 2020 BEA Program Award. • If an Applicant's CDFI certification application was submitted to the CDFI Fund by December 31, 2019, and is ultimately approved by the CDFI Fund by April 14, 2020, then the Applicant will be considered a ''certified'' CDFI for purposes of the FY 2020 BEA Program application.
Debarment/Do Not Pay Verification	• The CDFI Fund will conduct a debarment check and will not consider an Application submitted by an Applicant (or Affiliate of an Applicant) if the Applicant is delinquent on any Federal debt. • The Do Not Pay Business Center was developed to support Federal agencies in their efforts to reduce the number of improper payments made through programs funded by the Federal government. The Do Not Pay Business Center provides delinquency information to the CDFI Fund to assist with the debarment check.

B. *Prior Award Recipients:* The previous success of an Applicant in any of the CDFI Fund's programs will not be considered under this NOFA. Prior BEA Program Award Recipients and prior Award Recipients of other CDFI Fund programs are eligible to apply under this NOFA, except as noted in the following table:

TABLE 3—ELIGIBILITY REQUIREMENTS FOR APPLICANTS WHICH ARE PRIOR AWARD RECIPIENTS

Criteria	Description
Pending resolution of noncompliance	• If an Applicant (or Affiliate of an Applicant) that is a prior Award Recipient or Allocatee under any CDFI Fund program: (i) Has demonstrated it has been in noncompliance with a previous assistance agreement, award agreement, allocation agreement, bond loan agreement, or agreement to guarantee and (ii) the CDFI Fund has yet to make a final determination as to whether the entity is in noncompliance with or default of its previous agreement, the CDFI Fund will consider the Applicant's Application under this NOFA pending full resolution, in the sole determination of the CDFI Fund, of the noncompliance.
Default or Noncompliance status	• The CDFI Fund will not consider an Application submitted by an Applicant (or Affiliate of such Applicant) that has a previously executed assistance agreement, award agreement, bond loan agreement, or agreement to guarantee or allocation agreement if, as of the date of the Application, (i) the CDFI Fund has made a determination that such entity is noncompliant with and or in default of such previously executed agreement, and (ii) the CDFI Fund has provided written notification that such entity is ineligible to apply for or receive any future CDFI Fund awards or allocations. Such entities will be ineligible to submit an Application for such time period as specified by the CDFI Fund in writing.

C. *Contact the CDFI Fund:* Accordingly, Applicants that are prior Award Recipients and/or Allocatees under any CDFI Fund program are advised to comply with requirements specified in an assistance agreement, award agreement, allocation agreement, bond loan agreement, or agreement to guarantee. All outstanding reports and compliance questions should be directed to the Certification, Compliance Monitoring and Evaluation helpdesk by submitting a BEA Compliance and Reporting AMIS Service Request or by telephone at (202) 653–0423. The CDFI Fund will respond to Applicants' reporting, compliance, or disbursement questions between the hours of 9:00 a.m. and 5:00 p.m. ET, starting on the date of the publication of this NOFA. The CDFI Fund will not respond to Applicants' reporting, compliance, or disbursement telephone calls or electronic inquiries received after 5:00 p.m. ET on June 1, 2020, until after the Application deadline. The CDFI Fund will respond to technical issues related to AMIS Accounts through 5:00 p.m. ET on June 1, 2020, via an IT AMIS Service Request, email at *AMIS@cdfi.treas.gov,* or by telephone at (202) 653–0422.

D. *Cost sharing or matching fund requirements:* Not applicable.

IV. Application and Submission Information

A. *Address to Request an Application Package:* Application materials can be found on *Grants.gov* and the CDFI Fund's website at *www.cdfifund.gov/bea.* Applicants may request a paper version of any Application material by contacting the CDFI Fund Help Desk at *cdfihelp@cdfi.treas.gov.*

B. *Content and Form of Application Submission:* All Application materials must be prepared using the English language and calculations must be made in U.S. dollars. Applicants must submit all materials described in and required by the Application by the applicable deadlines. Detailed Application content requirements including instructions related to the submission of the Grant Application Package in *Grants.gov* and the FY 2020 BEA Program Application in AMIS, the CDFI Fund's web-based portal, are provided in detail in the Application Instructions. Once an Application is submitted, the Applicant will not be allowed to change any element of the Application. The CDFI Fund reserves the right to request and review other pertinent or public information that has not been specifically requested in this NOFA or the Application.

C. *Application Submission:* The CDFI Fund has a two-step submission process for BEA Applications that requires the submission of required application information on two separate deadlines and in two separate and distinct systems, *Grants.gov* and the CDFI Fund's AMIS. The first step is the submission of the Grant Application, which consists solely of the Office of Management and Budget Standard Form—424 Mandatory (SF–424 Mandatory) *Application for Federal Assistance,* in *Grants.gov*. The second step is to submit an FY 2020 BEA Program Application in AMIS.

D. *Grants.gov:* Applicants must be registered with *Grants.gov* to submit the Grants Application Package. The Grants Application Package consists of one item, the SF–424 Mandatory. In order to register with *Grants.gov*, Applicants must have a DUNS number and have an active registration with SAM.gov. The CDFI Fund strongly encourages Applicants to start the *Grants.gov* registration process as soon as possible (refer to the following link: *https://www.grants.gov/web/grants/register.html*) as it may take several weeks to complete. Applicants that have previously registered with *Grants.gov* must verify that their registration is current and active. Applicants should contact *Grants.gov* directly with questions related to the registration or submission process as the CDFI Fund does not administer or maintain this system. Applicants are required to submit a Grant Application Package in *Grants.gov* and have it validated by the *Grants.gov* submission deadline of May 4, 2020. The Grant Application Package is validated by *Grants.gov* after the Applicant's initial submission and it may take *Grants.gov* up to 48 hours to complete the validation process. Therefore, the CDFI Fund encourages Applicants to submit the Grant Application Package as early as possible. This will help to ensure that the Grant Application Package is validated before the *Grants.gov* submission deadline and provide time for Applicants to contact *Grants.gov* directly to resolve any submission issues since the CDFI Fund does not administer or maintain that system. For more information about *Grants.gov*, please visit *https://www.grants.gov* and see Table 8 for *Grants.gov* contact information.

The CDFI Fund electronically retrieves validated Grant Application Packages from *Grants.gov* and therefore only considers the submission of the Grant Application Package to be successful when it has been validated by *Grants.gov* before the submission deadline. It is the Applicant's sole responsibility to ensure that its Grant Application Package is submitted and validated by *Grants.gov* before the submission deadline. Applicants that do not successfully submit their Grant Application Package and have it validated by the *Grants.gov* submission deadline will not be able to submit a FY 2020 BEA Program Application in AMIS. The CDFI Fund will electronically retrieve validated Grant Application Packages from *Grants.gov* on a daily basis. Applicants are advised that it will take up to 48 hours from when the CDFI Fund retrieves the validated Grant Application Package for it to be available in AMIS to associate with a FY 2020 BEA Program Application.

Once the CDFI Fund has retrieved the validated Grant Application Package from *Grants.gov* and made it available in AMIS, Applicants must associate it with their Application. Applicants can begin working on their FY 2020 BEA Program Application in AMIS at any time, however, they will not be able to submit the application until the validated Grant Application Package is associated, by the Applicant, with the application.

Applicants are advised that the CDFI Fund will not notify them when the validated Grant Application Package has been retrieved from *Grants.gov* or when it is available in AMIS. It is the Applicant's responsibility to ensure that the validated SF–424 Mandatory is associated with its FY 2020 BEA Application in AMIS. Applicants will not be able to submit their FY 2020 BEA Program Application without completing this step.

Applicants are advised that the lookup function in the FY 2020 BEA Application in AMIS, uses the DUNS number reported on the validated Grant Application Package to match it with the correct AMIS Organization account. Therefore, Applicants must make sure the DUNS number included in the Grant Application Package submitted in *Grants.gov* matches the DUNS number in their AMIS Organization account. If, for example, the DUNS number does not match because the Applicant inadvertently used the DUNS number of their Bank Holding Company on the Grant Application Package in *Grants.gov* and is attempting to associate with AMIS Organization account of their FDIC-Insured Bank subsidiary, the lookup function will not return any results and the Applicant will not be able to submit the FY 2020 BEA Application.

Applicants are also highly encouraged to provide EIN, Authorized Representative and/or Contact Person

information on the Grant Application Package that matches the information included in AMIS Organization account.

E. *Dun & Bradstreet Universal Numbering System (DUNS):* Pursuant to the Uniform Administrative Requirements, each Applicant must provide, as part of its Application submission, a Dun and Bradstreet Universal Numbering System (DUNS) number. Applicants without a DUNS number will not be able to submit a Grant Application Package in *Grants.gov*. Applicants should allow sufficient time for Dun & Bradstreet to respond to inquiries and/or requests for DUNS numbers.

F. *System for Award Management (SAM):* An active SAM account is required to submit the required Grant Application Package in *Grants.gov*. Any entity applying for Federal grants or other forms of Federal financial assistance through *Grants.gov* must be registered in SAM in order to submit its Grant Application Package in *Grants.gov* or FY 2020 BEA Program Application in AMIS. When accessing *SAM.gov,* users will be asked to create a *login.gov* user account (if they don't already have one). Going forward, users will use their *login.gov* username and password every time when logging in to *SAM.gov*. Applicants must have established an active *SAM.gov* account no later than 30 days after the release of this NOFA. The SAM registration process can take three weeks or longer to complete so Applicants are strongly encouraged to begin the registration process upon release of this NOFA in order to avoid potential application submission problems. Applicants that have previously completed the SAM registration process must verify that their SAM accounts are current and active. Applicants are advised to complete the *SAM.gov* process at least 48 hours in advance of the Grants Application Package deadline. Applicants are required to maintain a current and active SAM account at all times during which it has an active Federal award or an Application under consideration for an award by a Federal awarding agency.

An original, signed notarized letter identifying the authorized Entity Administrator for the entity associated with the DUNS number is required by SAM and must be mailed to the Federal Service Desk. This requirement is applicable to new entities registering in SAM, as well as existing entities with registrations being updated or renewed in SAM. Additional information on the notarized letter process can be located at: *https://www.gsa.gov/about-us/organization/federal-acquisition-service/office-of-systems-management/integrated-award-environment-iae/sam-update-updated-july-11-2018.*

The CDFI Fund will not consider any Applicant that fails to properly register or activate its SAM's account and, as a result, is unable to submit its Grant Application Package in *Grants.gov*, or FY 2020 BEA Program Application in AMIS by the respective deadlines. Applicants must contact SAM directly with questions related to SAM registration or account changes as the CDFI Fund does not administer or maintain this system. For more information about SAM, please visit *https://www.sam.gov* or call 866–606–8220.

G. *AMIS:* All Applicants must complete an FY 2020 BEA Program Application in AMIS, the CDFI Fund's web-based portal. All Applicants must register User and Organization accounts in AMIS by June 1, 2020. In addition, all BEA transactions must be finalized in AMIS by June 1, 2020; this includes address/census tract verification. No transactions can be added, edited, or deleted after this deadline. Failure to register and complete a FY 2020 BEA Program Application in AMIS in accordance with the deadlines noted in Table 1: FY 2020 BEA Program Funding Round—Key Dates for Applicants will result in the CDFI Fund being unable to accept the Application. As AMIS is the CDFI Fund's primary means of communication with Applicants and Award Recipients, institutions must make sure that they update their contact information in their AMIS accounts. In addition, the Applicant should ensure that the institution information (name, EIN, DUNS number, Authorized Representative, contact information, etc.) on the Grant Application Package submitted as part of the Grant Application Package in *Grants.gov* matches the information in AMIS. EINs and DUNS numbers in the Applicant's SAM account must match those listed in AMIS. For more information on AMIS, please see the information available through the AMIS Home page at *https://amis.cdfifund.gov.* Qualified Activity documentation and other attachments as specified in the applicable BEA Program Application must also be submitted electronically via AMIS. Detailed instructions regarding submission of Qualified Activity documentation is provided in the Application Instructions and AMIS Training Manual for the BEA Program Application. Applicants will not be allowed to submit missing Qualified Activity documentation after the BEA Transactions deadline and any Qualified Activity missing the required documentation will be disqualified. Qualified Activity documentation delivered by hard copy to the CDFI Fund's Washington, DC office address will be rejected, unless the Applicant previously requested a paper version of the Application as described in Section IV.A.

H. *Submission Dates and Times:* The following table provides the critical deadlines for the FY 2020 BEA Funding Round. Applications and any other required documents or attachments received after the applicable deadline will be rejected. The document submission deadlines stated in this NOFA and the Application are strictly enforced. The CDFI Fund will not grant exceptions or waivers for late submissions except where the submission delay was a direct result of a Federal government administrative or technological error.

TABLE 4—CRITICAL DEADLINES FOR FY 2020 BEA FUNDING ROUND

Description	Deadline	Time (Eastern Time)
Grant Application Package/SF–424 Mandatory *Submission Method: Electronically via Grants.gov.*	May 4, 2020	11:59 p.m.
FY 2020 BEA Program Application *Submission Method: Electronically via AMIS.*	June 3, 2020	5:00 pm

1. Confirmation of Application Submission: Applicants may verify that their Grant Application Package was successfully submitted and validated in *Grants.gov* and that their FY 2020 BEA Program Application was successfully submitted in AMIS. Applicants should note that the Grant Application Package consists solely of the SF–424 Mandatory

and has a different deadline than the FY 2020 BEA Program Application. These deadlines are provided above in Table 4: FY 2020 BEA Program Funding Round Critical Deadlines for Applicants. If the Grant Application Package is not successfully submitted and subsequently validated by *Grants.gov* by the deadline, the CDFI Fund will not review the FY 2020 BEA Program Application or any of the application related material submitted in AMIS and the Application will be deemed ineligible.

a. *Grants.gov* Submission Information: In order to determine whether the Grant Application Package was submitted properly, each Applicant should: (1) Receive two separate emails from *Grants.gov*, and (2) perform an independent step in *Grants.gov* to determine whether the Grant Application was validated. Each Applicant will receive the first email from *Grants.gov* immediately after the Grant Application Package is submitted confirming that the submission has entered the *Grants.gov* system. This email will contain a tracking number. Within 48 hours, the Applicant will receive a second email which will indicate if the submitted Grant Application Package was successfully validated or rejected with errors. However, Applicants should not rely on the second email notification from *Grants.gov* to confirm that the Grant Application Package was validated. Instead, Applicants should then perform an independent step in *Grants.gov* to determine if the Grant Application Package status shows as ''Validated'' by clicking on the ''Applicants'' menu, followed by clicking ''Track my Application,'' and then entering the tracking number provided in the first email. The Grant Application Package cannot be retrieved by the CDFI Fund until it has been validated by *Grants.gov*.

b. AMIS Submission Information: AMIS is the web-based portal where Applicants will directly enter their application information and add supporting documentation, when applicable. The CDFI Fund strongly encourages the Applicant to allow sufficient time to confirm the Application content, review the material submitted, and remedy any issues prior to the BEA Transactions deadline. Only the Authorized Representative or an Application Point of Contact can submit the FY 2020 BEA Program Application in AMIS.

Applicants will not receive an email confirming that their FY 2020 BEA Program Application was successfully submitted in AMIS. Instead, Applicants should check their AMIS account to ensure that the status of the FY 2020 BEA Program Application shows ''Under Review.'' Step-by-step instructions for submitting an FY 2020 BEA Program Application in AMIS are provided in the Application Instructions, Supplemental Guidance, and AMIS Training Manual for the BEA Program Electronic Application.

2. Multiple Application Submissions: If an Applicant submits multiple versions of its Grant Application Package in *Grants.gov*, the Applicant can only associate one with its FY 2020 BEA Program Application in AMIS.

Applicants can only submit one FY 2020 BEA Program Application in AMIS. Upon submission, the Application will be locked and cannot be resubmitted, edited, or modified in any way. The CDFI Fund will not unlock a submitted Application or allow multiple Application submissions.

3. Late Submission: The CDFI Fund will not accept an SF–424 Mandatory in *Grants.gov* or an FY 2020 BEA Program Application in AMIS if it is not signed by an Authorized Representative or submitted after the respective deadlines. In either case, the CDFI Fund will not review any material submitted, and the Application will be deemed ineligible, except where the submission delay was a direct result of a Federal government administrative or technological error. This exception includes any errors associated with *Grants.gov*, *SAM.gov*, AMIS or any other applicable government system. Please note that this exception does not apply to errors arising from obtaining a DUNS number from Dun & Bradstreet, which is not a government entity. An Applicant unable to make timely submission of its Application due to any errors in the process of obtaining a DUNS number will not be allowed to submit its Application after the Application deadline has passed. In such case, the Applicant must submit their request for acceptance of a late Application submission to the BEA Program Office via an AMIS Service Request with documentation that clearly demonstrates the error by no later than two business days after the applicable Application deadline for *Grants.gov* or AMIS. The CDFI Fund will not respond to a request for acceptance of late Application submissions after that time period. The AMIS Service Request must be directed to the BEA Program with a subject line of ''FY 2020 BEA Late Application Submission Request.''

I. *Funding Restrictions:* BEA Program Awards are limited by the following:

1. The Award Recipient shall use BEA Program Award funds only for the eligible activities described in Section II. D. of this NOFA and the Authorized BEA Program Activities described in its Award Agreement.

2. The Award Recipient may not distribute BEA Program Award funds to an Affiliate, Subsidiary, or any other entity, without the CDFI Fund's prior written approval.

3. BEA Program Award funds shall only be disbursed to the Award Recipient.

4. The CDFI Fund, in its sole discretion, may disburse BEA Program Award funds in amounts, or under terms and conditions, which are different from those requested by an Applicant.

J. *Other Submission Requirements:* None.

V. Application Review Information

A. *Criteria:* If the Applicant submitted a complete and eligible Application, the CDFI Fund will conduct a substantive review in accordance with the criteria and procedures described in the Regulations, this NOFA, the Application guidance, and the Uniform Requirements. The CDFI Fund reserves the right to contact the Applicant by telephone, email, or mail for the sole purpose of clarifying or confirming Application information. If contacted, the Applicant must respond within the time period communicated by the CDFI Fund or run the risk that its Application will be rejected.

The CDFI Fund will not collect or accept any Personally Identifiable Information (PII) in AMIS or in any of the application submission materials. PII is information, which if lost, compromised, or disclosed without authorization, could result in substantial harm, embarrassment, inconvenience, or unfairness to an individual. Although Applicants are required to enter addresses of individual borrowers/residents of Distressed Communities in AMIS, Applicants must not include the following PII for the individuals who received the financial products or services in AMIS or in the supporting documentation: name of the individual, Social Security Number, driver's license or state identification number, passport number, and Alien Registration Number. This information should be redacted from all supporting documentation. If the CDFI Fund discovers PII during the review of an Application, the transaction will be deleted from the application record and deemed ineligible.

1. CDFI Related Activities: CDFI Related Activities include Equity Investments, Equity-Like Loans, and

CDFI Support Activities provided to eligible CDFI Partners.

2. Eligible CDFI Partner: CDFI Partner is defined as a certified CDFI that has been provided assistance in the form of CDFI Related Activities by an unaffiliated Applicant (12 CFR 1806.103). For the purposes of this NOFA, an eligible CDFI Partner must have been certified as a CDFI as of the date that the BEA Applicant made its investment or provided support, and be Integrally Involved in a Distressed Community (if the BEA Applicant provided CDFI Support Activities to the CDFI Partner).

3. Integrally Involved: Integrally Involved is defined at 12 CFR 1806.103. For purposes of this NOFA, in order for an Applicant to report CDFI Support Activities in its Application, the CDFI Partner which received the support must be deemed to be Integrally Involved by demonstrating it has: (i) Provided at least 10 percent of the number of its financial transactions or dollars transacted (*e.g.,* loans or Equity Investments), or 10 percent of the number of its Development Service Activities (as defined in 12 CFR 1805.104) or value of the administrative cost of providing such services, in one or more Distressed Communities identified by the CDFI Partner, in each of the three calendar years preceding the date of this NOFA; (ii) transacted at least 25 percent of the number of its financial transactions or dollars transacted (*e.g.,* loans or equity investments) in one or more Distressed Communities in at least one of the three calendar years preceding the date of this NOFA, or 25 percent of the number of its Development Service Activities (as defined in 12 CFR 1805.104) or value of the administrative cost of providing such services, in one or more Distressed Communities identified by the CDFI Partner, in at least one of the three calendar years preceding the date of this NOFA; (iii) demonstrated that it has attained at least 10 percent of market share for a particular financial product in one or more Distressed Communities (such as home mortgages originated in one or more Distressed Communities) in at least one of the three calendar years preceding the date of this NOFA; or (iv) at least 25 percent of the CDFI Partner's physical locations (*e.g.,* offices or branches) are located in one or more Distressed Communities where it provided financial transactions or Development Service Activities during the one calendar year preceding the date of the NOFA.

4. Limitations on eligible Qualified Activities provided to certain CDFI Partners: A CDFI Applicant cannot receive credit for any financial assistance or Qualified Activities provided to a CDFI Partner that is also an FDIC-insured depository institution or depository institution holding company.

5. Certificates of Deposit: Section 1806.103 of the Interim Rule states that any certificate of deposit (CD) placed by an Applicant or its Subsidiary in a CDFI Partner that is a bank, thrift, or credit union must be: (i) Uninsured and committed for at least three years; or (ii) insured, committed for a term of at least three years, and provided at an interest rate that is materially below market rates, in the determination of the CDFI Fund.

a. For purposes of this NOFA, ''materially below market interest rate'' is defined as an annual percentage rate that does not exceed the yields on Treasury securities at constant maturity as interpolated by Treasury from the daily yield curve and available on the Treasury website at *www.treas.gov/offices/domestic-finance/debt-management/interest-rate/yield.shtml.* For example, for a three-year CD, Applicants should use the three-year rate U.S. Government securities, Treasury Yield Curve Rate posted for that business day. The Treasury updates the website daily at approximately 5:30 p.m. ET. CDs placed prior to that time may use the rate posted for the previous business day. The annual percentage rate on a CD should be compounded daily, quarterly, semi-annually, or annually. If a variable interest rate is used, the CD must also have an interest rate that is materially below the market interest rate over the life of the CD, in the determination of the CDFI Fund. If a variable rate is used, the Applicant must describe its methodology for determining that the interest rate over the life of the CD is a materially below market interest rate. The CDFI Fund reserves the right to follow up with an Applicant regarding variable interest rate CD transactions.

b. For purposes of this NOFA, a deposit placed by an Applicant directly with a CDFI Partner that participates in a deposit network or service may be treated as eligible under this NOFA if it otherwise meets the criteria for deposits in 12 CFR.1806.103 and the CDFI Partner retains the full amount of the initial deposit or an amount equivalent to the full amount of the initial deposit through a deposit network exchange transaction.

6. Equity Investment: An Equity Investment means financial assistance provided by an Applicant or its Subsidiary to a CDFI, which CDFI meets such criteria as set forth in this NOFA, in the form of a grant, a stock purchase, a purchase of a partnership interest, a purchase of a limited liability company membership interest, or any other investment deemed to be an Equity Investment by the CDFI Fund.

7. Equity-Like Loan: An Equity-Like Loan is a loan provided by an Applicant or its Subsidiary to a CDFI, and made on such terms that it has characteristics of an Equity Investment, as such characteristics may be specified by the CDFI Fund (12 CFR 1806.103). For purposes of this NOFA, an Equity-Like Loan must meet the following characteristics:

a. At the end of the initial term, the loan must have a definite rolling maturity date that is automatically extended on an annual basis if the CDFI borrower continues to be financially sound and carry out a community development mission;

b. Periodic payments of interest and/or principal may only be made out of the CDFI borrower's available cash flow after satisfying all other obligations;

c. Failure to pay principal or interest (except at maturity) will not automatically result in a default of the loan agreement; and

d. The loan must be subordinated to all other debt except for other Equity-Like Loans. Notwithstanding the foregoing, the CDFI Fund reserves the right to determine, in its sole discretion and on a case-by-case basis, whether an instrument meets the above-stated characteristics of an Equity-Like Loan.

8. CDFI Support Activity: A CDFI Support Activity is defined as assistance provided by an Applicant or its Subsidiary to a CDFI that is Integrally Involved in a Distressed Community, in the form of a loan, Technical Assistance, or deposits.

9. CDFI Program Matching Funds: Equity Investments, Equity-Like Loans, and CDFI Support Activities (except Technical Assistance) provided by a BEA Applicant to a CDFI and used by the CDFI for matching funds under the CDFI Program are eligible as a Qualified Activity under the CDFI Related Activity category.

10. Commercial Loans and Investments: Commercial Loans and Investments is a sub-category of Distressed Community Financing Activities and is defined as the following lending activity types: Affordable Housing Development Loans and related Project Investments; Commercial Real Estate Loans and related Project Investments; and Small Business Loans and related Project Investments.

11. Consumer Loans: Consumer Loans is a sub-category of Distressed

Community Financing Activities and is defined as the following lending activity types: Affordable Housing Loans; Education Loans; Home Improvement Loans; and Small Dollar Consumer Loans.

12. Distressed Community Financing Activities and Service Activities: Distressed Community Financing Activities comply with consumer protection laws and are defined as (1) Consumer Loans; or (2) Commercial Loans and Investments. In addition to the requirements set forth in the Interim Rule, this NOFA provides the following additional requirements:

a. Affordable Housing Development Loans and Related Project Investments: For purposes of this NOFA, eligible Affordable Housing Development Loans and related Project Investments do not include housing for students, or school dormitories. In addition, for such transactions, Applicants will be required to provide supporting documentation that demonstrates that at least 60 percent of the units in the property financed are or will be sold or rented to Eligible Residents who meet Low-and-Moderate-income requirements, as noted in the Application instructions.

b. Commercial Real Estate Loans and related Project Investments: For purposes of this NOFA, eligible Commercial Real Estate Loans (12 CFR 1806.103) and related Project Investments are generally limited to transactions with a total principal value of $10 million or less.

Notwithstanding the foregoing, the CDFI Fund, in its sole discretion, may consider transactions with a total principal value of over $10 million, subject to review. For such transactions, Applicants must provide a separate narrative, or other information, to demonstrate that the proposed project offers, or significantly enhances the quality of, a facility or service not currently provided to the Distressed Community.

c. Small Dollar Consumer Loan: For purposes of this NOFA, eligible Small Dollar Consumer Loans are affordable loans that serve as available alternatives to the marketplace for individuals who are Eligible Residents with a total principal value of no less than $500 and no greater than $5,000 and have a term of ninety (90) days or more.

d. Distressed Community Financing Activities—Transactions Less Than $250,000: For purposes of this NOFA, Applicants are expected to maintain records for any transaction submitted as part of the FY 2020 BEA Program Application, including supporting documentation for transactions in the Distressed Community Financing Activity category of less than $250,000. The CDFI Fund reserves the right to request supporting documentation from an Applicant during its Application Review process for a Distressed Community Financing Activities transaction less than $250,000.

e. Low- and Moderate-Income residents: For the purposes of this NOFA, Low-Income means borrower income that does not exceed 80 percent of the area median income, and Moderate-Income means borrower income may be 81 percent to no more than 120 percent of the area median income, according to the U.S. Census Bureau data.

13. Reporting Certain Financial Services: The CDFI Fund will value the administrative cost of providing certain Financial Services using the following per unit values:

a. $100.00 per account for Targeted Financial Services including safe transaction accounts, youth transaction accounts, Electronic Transfer Accounts and Individual Development Accounts;

b. $50.00 per account for checking and savings accounts that do not meet the definition of Targeted Financial Services;

c. $5.00 per check cashing transaction;

d. $50,000 per new ATM installed at a location in a Distressed Community;

e. $500,000 per new retail bank branch office opened in a Distressed Community, including school-based bank branches approved by the Applicant's Federal bank regulator;

f. In the case of Applicants engaging in Financial Services activities not described above, the CDFI Fund will determine the unit value of such services;

g. When reporting the opening of a new retail bank branch office, the Applicant must certify that such new branch is intended to remain in operation for at least the next five years;

h. Financial Service Activities must be provided by the Applicant to Eligible Residents or enterprises that are located in a Distressed Community. An Applicant may determine the number of Eligible Residents who are Award Recipients of Financial Services by either: (i) Collecting the addresses of its Financial Services customers, or (ii) certifying that the Applicant reasonably believes that such customers are Eligible Residents or enterprises located in a Distressed Community and providing a brief analytical narrative with information describing how the Applicant made this determination. Citations must be provided for external sources. In addition, if external sources are referenced in the narrative, the Applicant must explain how it reached the conclusion that the cited references are directly related to the Eligible Residents or enterprises to whom it is claiming to have provided the Financial Services; and

i. When reporting changes in the dollar amount of deposit accounts, only calculate the net change in the total dollar amount of eligible Deposit Liabilities between the Baseline Period and the Assessment Period. Do not report each individual deposit. If the net change between the Baseline Period and Assessment Period is a negative dollar amount, then a negative dollar amount may be recorded for Deposit Liabilities only. Instructions for determining the net change is available in the FY 2020 BEA Program Application in AMIS.

14. Priority Factors: Priority Factors are the numeric values assigned to individual types of activity within: (i) The Distressed Community Financing Activities, and (ii) Services Activities categories of Qualified Activities. For the purposes of this NOFA, Priority Factors will be based on the Applicant's asset size as of the end of the Assessment Period (December 31, 2019) as reported by the Applicant in the Application. Asset size classes (*i.e.,* small institutions, intermediate-small institutions, and large institutions) will correspond to the Community Reinvestment Act (CRA) asset size classes set by the three Federal bank regulatory agencies and that were effective as of the end of the Assessment Period. The Priority Factor works by multiplying the change in a Qualified Activity by the assigned Priority Factor to achieve a ''weighted value.'' This weighted value of the change would be multiplied by the applicable Award percentage to yield the Award amount for that particular activity. For purposes of this NOFA, the CDFI Fund is establishing Priority Factors based on Applicant asset size to be applied to all activity types within the Distressed Community Financing Activities and Service Activities categories only, as follows:

TABLE 5—CRA ASSET SIZE CLASSIFICATION

	Priority factor
Small institutions (assets of less than $326 million as of 12/31/2019)	5.0
Intermediate—small institutions (assets of at least $326 million but less than $1.305 billion as of 12/31/2019)	3.0
Large institutions (assets of $1.305 billion or greater as of 12/31/2019)	1.0

15. Certain Limitations on Qualified Activities:

a. Low-Income Housing Tax Credits: Financial assistance provided by an Applicant for which the Applicant receives benefits through Low-Income Housing Tax Credits, authorized pursuant to Section 42 of the Internal Revenue Code, as amended (26 U.S.C. 42), shall not constitute an Equity Investment, Project Investment, or other Qualified Activity, for the purposes of calculating or receiving a BEA Program Award.

b. New Markets Tax Credits: Financial assistance provided by an Applicant for which the Applicant receives benefits as an investor in a Community Development Entity that has received an allocation of New Markets Tax Credits, authorized pursuant to Section 45D of the Internal Revenue Code, as amended (26 U.S.C. 45D), shall not constitute an Equity Investment, Project Investment, or other Qualified Activity, for the purposes of calculating or receiving a BEA Program Award. Leverage loans used in New Markets Tax Credit structured transactions that meet the requirements outlined in this NOFA are considered Distressed Community Financing Activities. The application materials will provide further guidance on requirements for BEA transactions which were leverage loans used in a New Markets Tax Credit structured transaction.

c. Loan Renewals and Refinances: Financial assistance provided by an Applicant shall not constitute a Qualified Activity, as defined in this part, for the purposes of calculating or receiving a BEA Program Award if such financial assistance consists of a loan to a borrower that has matured and is then renewed by the Applicant, or consists of a loan to a borrower that is retired or restructured using the proceeds of a new commitment by the Applicant.

d. Certain Business Types: Financial assistance provided by an Applicant shall not constitute a Qualified Activity, as defined in this part, for the purposes of financing the following business types: Adult entertainment providers, golf courses, race tracks, gambling facilities, country clubs, facilities offering massage services, hot tub facilities, suntan facilities, or stores where the principal business is the sale of alcoholic beverages for consumption off premises.

e. Prior BEA Program Awards: Qualified Activities funded with prior funding round BEA Program Award dollars or funded to satisfy requirements of the BEA Program Award Agreement shall not constitute a Qualified Activity for the purposes of calculating or receiving a BEA Program Award.

f. Prior CDFI Fund Awards: No Applicant may receive a BEA Program Award for the same activities funded by another CDFI Fund program or Federal program.

16. Award Percentages, Award Amounts, Application Review Process, Selection Process, Programmatic and Financial Risk, and Application Rejection: The Interim Rule and this NOFA describe the process for selecting Applicants to receive a BEA Program Award and determining Award amounts.

a. Award percentages: In the CDFI Related Activities subcategory of CDFI Equity, for all Applicants, the estimated award amount will be equal to 18 percent of the increase in Qualified Activities reported in this subcategory.

In the CDFI Related Activities subcategory of CDFI Support Activities, for a certified CDFI Applicant, the estimated award amount will be equal to 18 percent of the increase in Qualified Activities in this subcategory. If an Applicant is not a certified CDFI, the estimated award amount will be equal to 6 percent of the increase in Qualified Activities in this subcategory.

In Distressed Community Financing Activities' subcategory of Consumer Lending, the estimated award amount for certified CDFI Applicants will be 18 percent of the weighted value of the increase in Qualified Activities in this subcategory. If an Applicant is not a certified CDFI Applicant, the estimated award amount will be equal to 6 percent of the weighted value of the increase in Qualified Activities in this subcategory.

In the Distressed Community Financing Activities subcategory of Commercial Lending and Investments, for a certified CDFI Applicant, the estimated award amount will be equal to 9 percent of the weighted value of the increase in Qualified Activities in this subcategory. If an Applicant is not a certified CDFI, the estimated award amount will be equal to 3 percent of the weighted value of the increase in Qualified Activity in this subcategory.

In the Service Activities category, for a certified CDFI Applicant, the estimated award amount will be equal to 9 percent of the weighted value of the increase in Qualified Activity for the category. If an Applicant is not a certified CDFI, the estimated award amount will be equal to 3 percent of the weighted value of the increase in Qualified Activity for the category.

b. Award Amounts: An Applicant's estimated award amount will be calculated according to the procedure outlined in the Interim Rule (at 12 CFR 1806.403). As outlined in the Interim Rule at 12 CFR 1806.404, the CDFI Fund will determine actual Award amounts based on the availability of funds, increases in Qualified Activities from the Baseline Period to the Assessment Period, and the priority ranking of each Applicant.

In calculating the increase in Qualified Activities, the CDFI Fund will determine the eligibility of each transaction for which an Applicant has applied for a BEA Program Award. In some cases, the actual award amount calculated by the CDFI Fund may not be the same as the estimated award amount requested by the Applicant.

For purposes of calculating award payment amounts, the CDFI Fund will treat Qualified Activities with a total principal amount less than or equal to $250,000 as fully disbursed. For all other Qualified Activities, Award Recipients will have 12 months from the end of the Assessment Period to make disbursements and 15 months from the end of the Assessment Period to submit to the CDFI Fund subsequent payment requests for the corresponding portion of their awards, after which the CDFI Fund will rescind and de-obligate any outstanding award balance and said outstanding award balance will no longer be available to the Award Recipient.

B. *Review and Selection Process:*

1. Application Review Process: All Applications will be initially evaluated by external non-Federal reviewers. Reviewers are selected based on their experience in understanding various financial transactions, reading and interpreting financial documentation,

strong written communication skills, and strong mathematical skills. Reviewers must complete the CDFI Fund's conflict of interest process and be approved by the CDFI Fund.

2. Selection Process: If the amount of funds available during the funding round is insufficient for all estimated Award amounts, Award Recipients will be selected based on the process described in the Interim Rule at 12 CFR 1806.404. This process gives funding priority to Applicants that undertake activities in the following order: (i) CDFI Related Activities, (ii) Distressed Community Financing Activities, and (iii) Service Activities, as described in the Interim Rule at 12 CFR 1806.404(c).

Within each category, CDFI Applicants will be ranked first according to the ratio of the actual award amount calculated by the CDFI Fund for the category to the total assets of the Applicant, followed by Applicants that are not CDFI Applicants according to the ratio of the actual award amount calculated by the CDFI Fund for the category to the total assets of the Applicant. Selections within each priority category will be based on the Applicants' relative rankings within each such category, subject to the availability of funds and any established maximum dollar amount of total awards that may be awarded for the Distressed Community Financing Activities category of Qualified Activities, as determined by the CDFI Fund.

The CDFI Fund, in its sole discretion: (i) May adjust the estimated award amount that an Applicant may receive; (ii) may establish a maximum amount that may be awarded to an Applicant; and (iii) reserves the right to limit the amount of an award to any Applicant if the CDFI Fund deems it appropriate.

The CDFI Fund reserves the right to contact the Applicant to confirm or clarify information. If contacted, the Applicant must respond within the CDFI Fund's time parameters or the Application may be rejected.

The CDFI Fund reserves the right to change its eligibility and evaluation criteria and procedures. If those changes materially affect the CDFI Fund's award decisions, the CDFI Fund will provide information regarding the changes through the CDFI Fund's website.

3. Programmatic and Financial Risk: The CDFI Fund will consider safety and soundness information from the appropriate Federal bank regulatory agency as defined in Section 3 of the Federal Deposit Insurance Act (12 U.S.C. 1813(q)). If the appropriate Federal bank regulatory agency identifies safety and soundness concerns, the CDFI Fund will assess whether the concerns cause or will cause the Applicant to be incapable of completing the activities for which funding has been requested. The CDFI Fund will not approve a BEA Program Award under any circumstances for an Applicant if the appropriate Federal bank regulatory agency indicates that the Applicant received a composite rating of ''5'' on its most recent examination, performed in accordance with the Uniform Financial Institutions Rating System.

Furthermore, the CDFI Fund will not approve a BEA Program Award for an Applicant that has:

a. A CRA assessment rating of below ''Satisfactory'' on its most recent examination; (ii.) a financial audit with: a going concern paragraph, an adverse opinion, a disclaimer of opinion, or a withdrawal of an opinion on its most recent audit; or (iii.) a Prompt Corrective Action directive from its regulator imposing restrictions on its level of lending activities, that was active at the time the Applicant submitted its Application to the CDFI Fund or becomes active during the CDFI Fund's evaluation of the Application for: activities which funding has been requested, activities which meet the BEA Program criteria of Qualified Activities, or other circumstances which may impact an Applicant's ability to successfully manage, re-invest, and/or report on a FY 2020 BEA Program Award.

Applicants and/or their appropriate Federal bank regulator agency may be contacted by the CDFI Fund to provide additional information related to Federal bank regulatory or CRA information. The CDFI Fund will consider this information and may choose to not approve a FY 2020 BEA Program Award for an Applicant if the information indicates that the Applicant may be unable to responsibly manage, re-invest, and/or report on a FY 2020 BEA Program Award during the period of performance.

4. Persistent Poverty Counties: Should the CDFI Fund determine, upon analysis of the initial pool of BEA Program Award Recipients, that it has not achieved the 10 percent PPC requirement mandated by Congress, Award preference will be given to Applicants that committed to deploying a minimum of 10 percent of their FY 2020 BEA Program Award in PPCs. Applicants may be required to deploy more than the minimum commitment percentage, but the percentage required should not exceed the maximum commitment percentage provided in the Application. Applicants that committed to serving PPCs and are selected to receive a FY 2020 BEA Program award, will have their PPC commitment incorporated into their Award Agreement as a Performance Goal which will be subject to compliance and reporting requirements. No Applicant, however, will be disqualified from consideration for not making a PPC commitment in its BEA Program Application.

5. Application Rejection: The CDFI Fund reserves the right to reject an Application if information (including administrative error) comes to the CDFI Fund's attention that either: adversely affects an Applicant's eligibility for an award; adversely affects the CDFI Fund's evaluation or scoring of an Application; or indicates fraud or mismanagement on the Applicant's part. If the CDFI Fund determines any portion of the Application is incorrect in a material respect, the CDFI Fund reserves the right, in its sole discretion, to reject the Application.

There is no right to appeal the CDFI Fund's award decisions. The CDFI Fund's award decisions are final. The CDFI Fund will not discuss the specifics of an Applicant's FY 2020 BEA Program Application or provide reasons why an Applicant was not selected to receive a FY 2020 BEA Program Award. The CDFI Fund will only respond to general questions regarding the FY 2020 BEA Program Application and award decision process until 30 days after the award announcement date.

C. *Anticipated Announcement and Federal Award Dates:* The CDFI Fund anticipates making its FY 2020 BEA Program award announcement in the summer of 2020. The Federal Award Date shall be the date that the CDFI Fund executes the Award Agreement.

VI. Federal Award Administration Information

A. *Federal Award Notices:* The CDFI Fund will notify an Applicant of its selection as an Award Recipient by delivering a notification or letter. The Award Agreement will contain the general terms and conditions governing the CDFI Fund's provision of an Award. The Award Recipient will receive a copy of the Award Agreement via AMIS. The Award Recipient is required to sign the Award Agreement via an electronic signature in AMIS. The CDFI Fund will subsequently execute the Award Agreement. Each Award Recipient must also ensure that complete and accurate banking information is reflected in its SAM account at *www.sam.gov* in order to receive its award payment. Applicants are advised that the General Services Administration (GSA) will transition from using DUNS numbers as

the Unique Entity Identifier (UEI) to using SAM Managed Identifiers (SAMMI) on December 31, 2020. This transition is not expected to impact FY 2020 BEA Applicants' ability to submit an Application. However, Applicants are encouraged to stay informed about what is required to maintain an active SAM account status while payments are being processed for Award Recipients.

B. *Administrative and National Policy Requirements:* If, prior to entering into an Award Agreement, information (including an administrative error) comes to the CDFI Fund's attention that adversely affects: the Award Recipient's eligibility for an award; the CDFI Fund's evaluation of the Application; the Award Recipient's compliance with any requirement listed in the Uniform Requirements; or indicates fraud or mismanagement on the Award Recipient's part, the CDFI Fund may, in its discretion and without advance notice to the Award Recipient, terminate the award or take other actions as it deems appropriate.

If the Award Recipient's certification status as a CDFI changes, the CDFI Fund reserves the right, in its sole discretion, to re-calculate the award, and modify the Award Agreement based on the Award Recipient's non-CDFI status.

By executing an Award Agreement, the Award Recipient agrees that, if the CDFI Fund becomes aware of any information (including an administrative error) prior to the effective date of the Award Agreement that either adversely affects the Award Recipient's eligibility for an award, or adversely affects the CDFI Fund's evaluation of the Award Recipient's Application, or indicates fraud or mismanagement on the part of the Award Recipient, the CDFI Fund may, in its discretion and without advance notice to the Award Recipient, terminate the Award Agreement or take other actions as it deems appropriate.

The CDFI Fund reserves the right, in its sole discretion, to rescind an award if the Award Recipient fails to return the Award Agreement, signed by the authorized representative of the Award Recipient, and/or provide the CDFI Fund with any other requested documentation, within the CDFI Fund's deadlines.

In addition, the CDFI Fund reserves the right, in its sole discretion, to terminate and rescind the Award Agreement and the award made under this NOFA for any criteria described in the following table:

TABLE 6—CRITERIA THAT MAY RESULT IN AWARD TERMINATION PRIOR TO THE EXECUTION OF AN AWARD AGREEMENT

Criteria	Description
Failure to maintain FDIC-insured status	• If prior to entering into an Award Agreement under this NOFA, the Award Recipient does not maintain its FDIC-insured status, the CDFI Fund will terminate and rescind the Award Agreement and the award made under this NOFA.
Failure to meet reporting requirements	• If an Applicant is a prior CDFI Fund Award Recipient or Allocatee under any CDFI Fund program and is not current on the reporting requirements set forth in the previously executed assistance, award, allocation, bond loan agreement(s), or agreement to guarantee, the CDFI Fund reserves the right, in its sole discretion, to delay entering into an Award Agreement and/or to delay making a disbursement of Award proceeds, until said prior Award Recipient or Allocatee is current on the reporting requirements in the previously executed assistance, award, allocation, bond loan agreement(s), or agreement to guarantee. Please note that automated systems employed by the CDFI Fund for receipt of reports submitted electronically typically acknowledge only a report's receipt; such acknowledgment does not warrant that the report received was complete and therefore met reporting requirements. If said prior Award Recipient or Allocatee is unable to meet this requirement within the timeframe set by the CDFI Fund, the CDFI Fund reserves the right, in its sole discretion, to terminate and rescind the award made under this NOFA.
Pending resolution of noncompliance	• If, at any time prior to entering into an Award Agreement under this NOFA, an Applicant (or Affiliate of an Applicant) that is a prior CDFI Fund Award Recipient or Allocatee under any CDFI Fund program: (i) Has demonstrated it has been in noncompliance with a previous assistance, award, allocation agreement, bond loan agreement, or agreement to guarantee, but (ii) the CDFI Fund has yet to make a final determination regarding whether or not the entity is in noncompliance with or in default of its previous assistance, award, allocation, bond loan agreement, or agreement to guarantee, the CDFI Fund reserves the right, in its sole discretion, to delay entering into an Award Agreement and/or to delay making a payment of award proceeds, pending full resolution, in the sole determination of the CDFI Fund, of the noncompliance. • If said prior Award Recipient or Allocatee is unable to meet this requirement, in the sole determination of the CDFI Fund, the CDFI Fund reserves the right, in its sole discretion, to terminate and rescind the award made under this NOFA.
Default or Noncompliance status	• If prior to entering into an Award Agreement under this NOFA: (i) The CDFI Fund has made a final determination that an Applicant (or an Affiliate of an Applicant) that is a prior CDFI Fund Award Recipient or Allocatee under any CDFI Fund program whose award or allocation terminated in default or noncompliance of such prior agreement; (ii) the CDFI Fund has provided written notification of such determination to such organization; and (iii) the anticipated date for entering into the Award Agreement under this NOFA is within a period of time specified in such notification throughout which any new award, allocation, assistance, bond loan agreement(s), or agreement to guarantee is prohibited, the CDFI Fund reserves the right, in its sole discretion, to terminate and rescind the Award Agreement and the award made under this NOFA.
Compliance with Federal civil rights requirements.	• If prior to entering into an Award Agreement under this NOFA, the Award Recipient receives a final determination, made within the last three years, in any proceeding instituted against the Award Recipient in, by, or before any court, governmental, or administrative body or agency, declaring that the Award Recipient has violated the following laws: Title VI of the Civil Rights Act of 1964, as amended (42 U.S.C. § 2000d); Section 504 of the Rehabilitation Act of 1973 (29 U.S.C. § 794); the Age Discrimination Act of 1975, (42 U.S.C. § 6101–6107), and Executive Order 13166, Improving Access to Services for Persons with Limited English Proficiency, the CDFI Fund will terminate and rescind the Award Agreement and the award made under this NOFA.

TABLE 6—CRITERIA THAT MAY RESULT IN AWARD TERMINATION PRIOR TO THE EXECUTION OF AN AWARD AGREEMENT—Continued

Criteria	Description
Do Not Pay	• The Do Not Pay Business Center was developed to support Federal agencies in their efforts to reduce the number of improper payments made through programs funded by the Federal government. • The CDFI Fund reserves the right, in its sole discretion, to rescind an award if the Award Recipient (or Affiliate of a Recipient) is identified as ineligible to be an Award Recipient per the Do Not Pay database.
Safety and Soundness	• If it is determined the Award Recipient is or will be incapable of meeting its award obligations, the CDFI Fund will deem the Award Recipient to be ineligible or require it to improve safety and soundness conditions prior to entering into an Award Agreement.

C. *Award Agreement:* After the CDFI Fund selects an Award Recipient, unless an exception detailed in this NOFA applies, the CDFI Fund and the Award Recipient will enter into an Award Agreement. The Award Agreement will set forth certain required terms and conditions of the award, which will include, but not be limited to: (i) The amount of the award; (ii) the approved uses of the award; (iii) the performance goals and measures; (iv) the period of performance; and (v) the reporting requirements. The Award Agreement shall provide that an Award Recipient shall: (i) Carry out its Qualified Activities in accordance with applicable law, the approved Application, and all other applicable requirements; (ii) not receive any disbursement of award dollars until the CDFI Fund has determined that the Award Recipient has fulfilled all applicable requirements; and (iii) use the BEA Program Award amount for Qualified Activities. Award Recipients which committed to serving PPCs will have their PPC commitment incorporated into their Award Agreement as a performance goal which will be subject to compliance and reporting requirements.

D. *Reporting:* Through this NOFA, the CDFI Fund will require each Award Recipient to account for and report to the CDFI Fund on the use of the award. This will require Award Recipients to establish administrative controls, subject to applicable OMB Circulars. The CDFI Fund will collect information from each such Award Recipient on its use of the award at least once following the award and more often if deemed appropriate by the CDFI Fund in its sole discretion. The CDFI Fund will provide guidance to Award Recipients outlining the format and content of the information required to be provided to describe how the funds were used. The CDFI Fund may collect information from each Award Recipient including, but not limited to, an Annual Report with the following components:

TABLE 7—REPORTING REQUIREMENTS

Criteria	Description
Financial Statement Audit Report (FSA report)—for all Award Recipients.	Award Recipients must submit the FSA report to the CDFI Fund via AMIS.
Use of BEA Program Award Report—for all Award Recipients	Award Recipients must submit the Use of Award report to the CDFI Fund via AMIS.
Use of BEA Program Award Report—Funds Deployed in Persistent Poverty Counties—as applicable.	The CDFI Fund will require each Award Recipient with Persistent Poverty County commitments to report data for Award funds deployed in persistent poverty counties and maintain proper supporting documentation and records which are subject to review by the CDFI Fund.
Explanation of Noncompliance or successor report—as applicable	If the Award Recipient fails to meet a Performance Goal or reporting requirement, it must submit the Explanation of Noncompliance via AMIS.

Each Award Recipient is responsible for the timely and complete submission of the reporting requirements. The CDFI Fund reserves the right to contact the Award Recipient to request additional information and documentation. The CDFI Fund may consider financial information filed with Federal regulators during its compliance review. The CDFI Fund will use such information to monitor each Award Recipient's compliance with the requirements in the Award Agreement and to assess the impact of the BEA Program. The CDFI Fund reserves the right, in its sole discretion, to modify these reporting requirements if it determines it to be appropriate and necessary; however, such reporting requirements will be modified only after notice has been provided to Award Recipients.

E. *Financial Management and Accounting:* The CDFI Fund will require Award Recipients to maintain financial management and accounting systems that comply with Federal statutes, regulations, and the terms and conditions of the award. These systems must be sufficient to permit the preparation of reports required by general and program specific terms and conditions, including the tracing of funds to a level of expenditures adequate to establish that such funds have been used according to the Federal statutes, regulations, and the terms and conditions of the award.

Each of the Qualified Activities categories will be ineligible for indirect costs and an associated indirect cost rate. The cost principles used by Award Recipients must be consistent with Federal cost principles and support the accumulation of costs as required by the principles, and must provide for adequate documentation to support costs charged to the BEA Program Award. In addition, the CDFI Fund will require Award Recipients to: maintain effective internal controls; comply with

applicable statutes, regulations, and the Award Agreement; evaluate and monitor compliance; take action when not in compliance; and safeguard personally identifiable information, as described in Section V.A. of this NOFA.

VII. Federal Awarding Agency Contacts

A. *Questions Related to Application and Prior Award Recipient Reporting, Compliance and Disbursements:* The CDFI Fund will respond to questions concerning this NOFA, the Application and reporting, compliance, or disbursements between the hours of 9:00 a.m. and 5:00 p.m. Eastern Time, starting on the date that this NOFA is published through the date listed in Table 1. The CDFI Fund will post responses to frequently asked questions in a separate document on its website. Other information regarding the CDFI Fund and its programs may be obtained from the CDFI Fund's website at *https://www.cdfifund.gov.*

The following table lists contact information for the CDFI Fund, *Grants.gov* and SAM:

TABLE 8—CONTACT INFORMATION

Type of question	Telephone number (not toll free)	Electronic contact method
BEA Program	202–653–0421	BEA AMIS Service Request.
Certification, Compliance Monitoring, and Evaluation	202–653–0423	BEA Compliance and Reporting AMIS Service Request.
AMIS—IT Help Desk	202–653–0422	IT AMIS Service Request.
Grants.gov Help Desk	800–518–4726	*support@grants.gov.*
SAM.gov (Federal Service Desk)	866–606–8220	Web form via *https://www.fsd.gov/fsd-gov/login.do.*

B. *Information Technology Support:* People who have visual or mobility impairments that prevent them from using the CDFI Fund's website should call (202) 653–0422 for assistance (this is not a toll free number).

C. *Communication with the CDFI Fund:* The CDFI Fund will use its AMIS internet interface to communicate with Applicants and Award Recipients under this NOFA. Award Recipients must use AMIS to submit required reports. The CDFI Fund will notify Award Recipients by email using the addresses maintained in each Award Recipient's AMIS account. Therefore, an Award Recipient and any Subsidiaries, signatories, and Affiliates must maintain accurate contact information (including contact person and authorized representative, email addresses, fax numbers, phone numbers, and office addresses) in their AMIS account(s).

D. *Civil Rights and Diversity:* Any person who is eligible to receive benefits or services from CDFI Fund or Award Recipients under any of its programs is entitled to those benefits or services without being subject to prohibited discrimination. The Department of the Treasury's Office of Civil Rights and Diversity enforces various Federal statutes and regulations that prohibit discrimination in financially assisted and conducted programs and activities of the CDFI Fund. If a person believes that s/he has been subjected to discrimination and/or reprisal because of membership in a protected group, s/he may file a complaint with: Associate Chief Human Capital Officer, Office of Civil Rights, and Diversity, 1500 Pennsylvania Ave. NW, Washington, DC 20220 or (202) 622–1160 (not a toll-free number).

E. *Statutory and National Policy Requirements:* The CDFI Fund will manage and administer the Federal award in a manner so as to ensure that Federal funding is expended and associated programs are implemented in full accordance with the U.S. Constitution, Federal Law, statutory, and public policy requirements: Including, but not limited to, those protecting free speech, religious liberty, public welfare, the environment, and prohibiting discrimination.

VIII. Other Information

A. *Reasonable Accommodations:* Requests for reasonable accommodations under section 504 of the Rehabilitation Act should be directed to Mr. Jay Santiago, Community Development Financial Institutions Fund, U.S. Department of the Treasury, at *SantiagoJ@cdfi.treas.gov* no later than 72 hours in advance of the application deadline.

B. *Paperwork Reduction Act:* Under the Paperwork Reduction Act (44 U.S.C. chapter 35), an agency may not conduct or sponsor a collection of information, and an individual is not required to respond to a collection of information, unless it displays a valid OMB control number. Pursuant to the Paperwork Reduction Act, the BEA Program funding Application has been assigned the following control number: 1559–0005.

C. *Application Information Sessions:* The CDFI Fund may conduct webinars or host information sessions for organizations that are considering applying to, or are interested in learning about, the CDFI Fund's programs. For further information, please visit the CDFI Fund's website at *https://www.cdfifund.gov.*

Authority: 12 U.S.C. 1834a, 4703, 4703 note, 4713; 12 CFR part 1806.

Jodie Harris,

Director, Community Development Financial Institutions Fund.

[FR Doc. 2020–07012 Filed 4–2–20; 8:45 am]

BILLING CODE 4810–70–P

DEPARTMENT OF THE TREASURY

United States Mint

Citizens Coinage Advisory Committee; Meeting

ACTION: Notification of Citizens Coinage Advisory Committee April 14, 2020, telephonic public meeting.

SUMMARY: The United States Mint announces the Citizens Coinage Advisory Committee (CCAC) telephonic public meeting scheduled for April 14, 2020.

Date: April 14, 2020.

Time: 1:00 p.m. to 3:00 p.m. EST.

Location: This meeting will occur *via teleconference.* Interested members of the public may dial in to listen to the meeting at (866) 564–9287/Access Code: 62956028.

Subject: Review and discussion of candidate designs for the George H.W. Bush Presidential $1 Coin.

Interested persons should call the CCAC HOTLINE at (202) 354–7502 for the latest update on meeting time and location.

Any member of the public interested in submitting matters for the CCAC's consideration is invited to submit them by email to *info@ccac.gov.*

The CCAC advises the Secretary of the Treasury on any theme or design proposals relating to circulating coinage, bullion coinage, Congressional Gold

Medals, and national and other medals; advises the Secretary of the Treasury with regard to the events, persons, or places to be commemorated by the issuance of commemorative coins in each of the five calendar years succeeding the year in which a commemorative coin designation is made; and makes recommendations with respect to the mintage level for any commemorative coin recommended.

FOR FURTHER INFORMATION CONTACT: Jennifer Warren, United States Mint Liaison to the CCAC; 801 9th Street NW; Washington, DC 20220; or call 202–354–7208.

Authority: 31 U.S.C. 5135(b)(8)(C).

David J. Ryder,

Director, United States Mint.

[FR Doc. 2020–06963 Filed 4–2–20; 8:45 am]

BILLING CODE P

DEPARTMENT OF VETERANS AFFAIRS

[OMB Control No. 2900–0365]

Agency Information Collection Activity: (Request for Disinterment)

AGENCY: National Cemetery Administration, Department of Veterans Affairs.

ACTION: Notice.

SUMMARY: In compliance with the Paperwork Reduction Act (PRA) of 1995, this notice announces that the National Cemetery Administration, Department of Veterans Affairs, will submit the collection of information abstracted below to the Office of Management and Budget (OMB) for review and comment. The PRA submission describes the nature of the information collection and its expected cost and burden and it includes the actual data collection instrument.

DATES: Written comments and recommendations for the proposed information collection should be sent within 30 days of publication of this notice to *www.reginfo.gov/public/do/PRAMain.* Find this particular information collection by selecting ''Currently under 30-day Review—Open for Public Comments'' or by using the search function. Refer to ''OMB Control No. 2900–0365.

SUPPLEMENTARY INFORMATION:

Authority: Public Law 104–13; 44 U.S.C. 3501–21.

Title: Request for Disinterment, VA Form 40–4970.

OMB Control Number: 2900–0365.

Type of Review: Revision of a currently approved collection.

Abstract: Claimants complete VA Form 40–4970 to request removal of remains from a national cemetery for interment at another location. Interments made in national cemeteries are permanent and final. All immediate family members of the decedent, including the person who initiated the interment, (whether or not he/she is a member of the immediate family) must provide a written consent before disinterment is granted. VA will accept an order from a court of local jurisdiction in lieu of VA Form 40–4970.

An agency may not conduct or sponsor, and a person is not required to respond to a collection of information unless it displays a currently valid OMB control number. The **Federal Register** Notice with a 60-day comment period soliciting comments on this collection of information was published at Volume 85, No. 18 on Tuesday, January 28, 2020, page 5068.

Affected Public: Individuals or Households.

Estimated Annual Burden: 296

Estimated Average Burden Per Respondent: 10 minutes.

Frequency of Response: Annual.

Estimated Number of Respondents: 1777.

By direction of the Secretary.

Danny S. Green,

Department Clearance Officer, Office of Quality, Performance and Risk, Department of Veterans Affairs.

[FR Doc. 2020–06988 Filed 4–2–20; 8:45 am]

BILLING CODE 8320–01–P

DEPARTMENT OF VETERANS AFFAIRS

Advisory Committee: VA National Academic Affiliations Council, Notice of Meeting

The Department of Veterans Affairs (VA) gives notice under the Federal Advisory Committee Act that the VA National Academic Affiliations Council (NAAC) will meet via conference call on May 1, 2020, from 3:00 p.m. to 4:00 p.m. EST. The meeting is open to the public.

The purpose of the Council is to advise the Secretary on matters affecting partnerships between VA and its academic affiliates.

On May 1, 2020, the Council will discuss the healthcare education community response to COVID–19. The Council will receive public comments from 3:50 p.m. to 4:00 p.m. EST.

Interested persons may attend and/or present oral statements to the Council. The dial in number to attend the conference call is: 1–800–767–1750. At the prompt, enter access code 12095 then press #. Individuals seeking to present oral statements are invited to submit a 1–2 page summary of their comments at the time of the meeting for inclusion in the official meeting record. Oral presentations will be limited to five minutes or less, depending on the number of participants. Interested parties may also provide written comments for review by the Council prior to the meeting or at any time, by email to *Larissa.Emory@va.gov,* or by mail to Larissa A. Emory PMP, CBP, MS, Designated Federal Officer, Office of Academic Affiliations (10X1), 810 Vermont Avenue NW, Washington, DC 20420. Any member of the public wishing to participate or seeking additional information should contact Ms. Emory via email or by phone at (915) 269–0465.

Dated: March 31, 2020.

Jelessa M. Burney,

Federal Advisory Committee Management Officer.

[FR Doc. 2020–07050 Filed 4–2–20; 8:45 am]

BILLING CODE P

DEPARTMENT OF VETERANS AFFAIRS

[OMB Control No. 2900–0521]

Agency Information Collection Activity: Report and Certification of Loan Disbursement, Request for Verification of Employment and Request for Verification of Deposit

AGENCY: Veterans Benefits Administration, Department of Veterans Affairs.

ACTION: Notice.

SUMMARY: In compliance with the Paperwork Reduction Act (PRA) of 1995, this notice announces that the Veterans Benefits Administration, Department of Veterans Affairs, will submit the collection of information abstracted below to the Office of Management and Budget (OMB) for review and comment. The PRA submission describes the nature of the information collection and its expected cost and burden and it includes the actual data collection instrument.

DATES: Comments must be submitted on or before May 4, 2020.

ADDRESSES: Submit written comments on the collection of information through *www.Regulations.gov,* or to Office of Information and Regulatory Affairs, Office of Management and Budget, Attn: VA Desk Officer; 725 17th St. NW, Washington, DC 20503 or sent through electronic mail to *oira_submission@omb.eop.gov.* Please refer to ''OMB Control No. 2900–0521'' in any correspondence.

FOR FURTHER INFORMATION CONTACT: Danny S. Green, (202) 421–1354 or email *Danny.Green2@va.gov.* Please refer to ''OMB Control No. 2900–0521'' in any correspondence.

SUPPLEMENTARY INFORMATION:

Authority: Public Law 104–13; 44 U.S.C. 3501–3521.

Title: Report and Certification of Loan Disbursement, Request for Verification of Employment and Request for Verification of Deposit, (VA Form 26–1820, VA Form 26–8497, VA Form 26–8497a).

OMB Control Number: 2900–0521.

Type of Review: Extension of a currently approved collection.

Abstract: Lenders must obtain specific information concerning a veteran's credit history in order to properly underwrite the veteran's loan. VA loans may not be guaranteed unless the veteran is a satisfactory credit risk. The data collected on the following forms are used to ensure that applications for VA-guaranteed loans are underwritten in a reasonable and prudent manner.

a. VA Form 26–1820 is completed by lenders closing VA-guaranteed and insured loans under the automatic or prior approval procedures.

b. VA Form 26–8497 is used by lenders to verify a loan applicant's income and employment information when making guaranteed and insured loans. VA does not require the exclusive use of this form for verification purposes, any alternative verification document would be acceptable provided that all information requested on VA Form 26–8497 is provided.

c. Lenders making guaranteed and insured loans complete VA Form 26–8497a to verify the applicant's deposits in banks and other savings institutions.

An agency may not conduct or sponsor, and a person is not required to respond to a collection of information unless it displays a currently valid OMB control number. The **Federal Register** Notice with a 60-day comment period soliciting comments on this collection of information was published at 85 FR18 on January 28, 2020, pages 5068 and 5069.

Affected Public: Individuals or households.

Estimated Annual Burden: 187,500 hours.

VA Form 26–1820: 150,000 hours.
VA From 26–8497: 25,000 hours.
VA Form 26–8497a: 12,500 hours.

Estimated Average Burden Per Respondent:

VA Form 26–1820: 15 minutes.
VA Form 26–8497: 10 minutes.
VA Form 26–8497a: 5 minutes.

Frequency of Response: One time.

Estimated Number of Respondents: 900,000.

VA Form 26–1820: 600,000.
VA Form 26–8497: 150,000.
VA Form 26–8497a: 150,000.

By direction of the Secretary.

Danny S. Green,

VA Clearance Officer, Office of Quality, Performance and Risk, Department of Veterans Affairs.

[FR Doc. 2020–06971 Filed 4–2–20; 8:45 am]

BILLING CODE 8320–01–P

DEPARTMENT OF VETERANS AFFAIRS

[OMB Control No. 2900–0797]

Agency Information Collection Activity: Principles of Excellence Complaint System Intake

AGENCY: Veterans Benefits Administration, Department of Veterans Affairs.

ACTION: Notice.

SUMMARY: The Veterans Benefits Administration (VBA), Department of Veterans Affairs (VBA), is announcing an opportunity for public comment on the proposed collection of certain information by the agency. Under the Paperwork Reduction Act (PRA) of 1995, Federal agencies are required to publish notice in the **Federal Register** concerning each proposed collection of information, including each proposed extension of a currently approved collection, and allow 60 days for public comment in response to the notice.

DATES: Written comments and recommendations on the proposed collection of information should be received on or before June 2, 2020.

ADDRESSES: Submit written comments on the collection of information through Federal Docket Management System (FDMS) at *www.Regulations.gov* or to Nancy J. Kessinger, Veterans Benefits Administration (20M33), Department of Veterans Affairs, 810 Vermont Avenue NW, Washington, DC 20420 or email to *nancy.kessinger@va.gov.* Please refer to ''OMB Control No. 2900–0797'' in any correspondence. During the comment period, comments may be viewed online through FDMS.

FOR FURTHER INFORMATION CONTACT: Danny S. Green at (202) 421–1354.

SUPPLEMENTARY INFORMATION: Under the PRA of 1995, Federal agencies must obtain approval from the Office of Management and Budget (OMB) for each collection of information they conduct or sponsor. This request for comment is being made pursuant to Section 3506(c)(2)(A) of the PRA.

With respect to the following collection of information, VBA invites comments on: (1) Whether the proposed collection of information is necessary for the proper performance of VBA's functions, including whether the information will have practical utility; (2) the accuracy of VBA's estimate of the burden of the proposed collection of information; (3) ways to enhance the quality, utility, and clarity of the information to be collected; and (4) ways to minimize the burden of the collection of information on respondents, including through the use of automated collection techniques or the use of other forms of information technology.

Authority: Executive Order 13607.

Title: Principles of Excellence Complaint System Intake.

OMB Control Number: 2900–0797.

Type of Review: Extension of a currently approved collection.

Abstract: The respondent submits a complaint about an educational institution online through either the GI Bill website or the eBenefit portal. The information gathered can only be obtained from the individual respondents. Valid complaints will be accepted from third parties.

The intake process for both DoD's and VA's complaint system share common data elements, but have some modifications specific to each agencies complaint handling process:

VA

- Institution/Employer: There are over 36,000 educational institutions that are approved for VA education benefits, while DoD has less than 7000.
- Anonymous Complaints: PoECS allows for a user to file anonymous complaints. Based on working group discussions with CFPB and FTC, VA believes that allowing anonymous complaints will garner more ground truth on what is happening with veterans using their education benefits at different schools.
- Required fields: As a result of allowing anonymous complaints, many of the fields that DoD requires

a user to fill will not be required by VA

DoD

- Education Centers: DoD requires education center information that does not fall within the purview of VA.
- Military Branch/Rank: DoD requires a user to select a service affiliation and pay grade.

Affected Public: Individuals and households.

Estimated Annual Burden: 399 hours.

Estimated Average Burden Per Respondent: 15 minutes.

Frequency of Response: On occasion.

Estimated Number of Respondents: 1596.

By direction of the Secretary.

Danny S. Green,

VA PRA Clearance Officer, Office of Quality, Performance and Risk, Department of Veterans Affairs.

[FR Doc. 2020–07029 Filed 4–2–20; 8:45 am]

BILLING CODE 8320–01–P

Reader Aids

Federal Register

Vol. 85, No. 65

Friday, April 3, 2020

CUSTOMER SERVICE AND INFORMATION

Federal Register/Code of Federal Regulations	
General Information, indexes and other finding aids	**202–741–6000**
Laws	**741–6000**
Presidential Documents	
Executive orders and proclamations	**741–6000**
The United States Government Manual	**741–6000**
Other Services	
Electronic and on-line services (voice)	**741–6020**
Privacy Act Compilation	**741–6050**

ELECTRONIC RESEARCH

World Wide Web

Full text of the daily Federal Register, CFR and other publications is located at: **www.govinfo.gov.**

Federal Register information and research tools, including Public Inspection List and electronic text are located at: **www.federalregister.gov.**

E-mail

FEDREGTOC (Daily Federal Register Table of Contents Electronic Mailing List) is an open e-mail service that provides subscribers with a digital form of the Federal Register Table of Contents. The digital form of the Federal Register Table of Contents includes HTML and PDF links to the full text of each document.

To join or leave, go to **https://public.govdelivery.com/accounts/USGPOOFR/subscriber/new**, enter your email address, then follow the instructions to join, leave, or manage your subscription.

PENS (Public Law Electronic Notification Service) is an e-mail service that notifies subscribers of recently enacted laws.

To subscribe, go to **http://listserv.gsa.gov/archives/publaws-l.html and select** *Join or leave the list (or change settings);* then follow the instructions.

FEDREGTOC and **PENS** are mailing lists only. We cannot respond to specific inquiries.

Reference questions. Send questions and comments about the Federal Register system to: **fedreg.info@nara.gov**

The Federal Register staff cannot interpret specific documents or regulations.

FEDERAL REGISTER PAGES AND DATE, APRIL

18105–18412 1
18413–18856 2
18857–19076 3

CFR PARTS AFFECTED DURING APRIL

At the end of each month the Office of the Federal Register publishes separately a List of CFR Sections Affected (LSA), which lists parts and sections affected by documents published since the revision date of each title.

3 CFR

Proclamations:
10000 18847
Executive Orders:
13911 18403
13912 18407
Administrative Orders:
Memorandums:
Memorandum of March 28, 2020 18409
Memorandum of March 30, 2020 18411
Memorandum of March 30, 2020 18849
Notices:
Notice of April 1, 2020 18855

7 CFR

1719 18413
Proposed Rules:
800 18155

8 CFR

1003 18105

9 CFR

Proposed Rules:
57 18471
161 18471

10 CFR

72 18857
Proposed Rules:
Ch. I 18477
72 18876

12 CFR

225 18427
238 18427
Proposed Rules:
5 18728
261a 18156

13 CFR

120 18107

14 CFR

25 18108
39 ..... 18428, 18431, 18435, 18862
61 18110
71 ..... 18869, 18870
Proposed Rules:
39 18478

15 CFR

732 18438
734 18438
Proposed Rules:
4 18481

16 CFR

1232 18111
Proposed Rules:
1112 18878
1130 18878
1240 18878

18 CFR

Proposed Rules:
35 18784

21 CFR

5 18439
500 18114
510 18114
520 ..... 18114, 18125
522 ..... 18114, 18125
524 18114
526 ..... 18114, 18125
556 18114
558 18114
801 18439
803 18439
807 18439
814 18439
820 18439
821 18439
822 18439
830 18439
860 18439
862 18444
866 18444
884 18439
900 18439
1002 18439
Proposed Rules:
886 ..... 18483, 18490

22 CFR

121 18445
123 18445
124 18445
126 18445
129 18445

26 CFR

Proposed Rules:
1 18496
301 18496

27 CFR

4 18704
5 18704
7 18704
19 18704

29 CFR

103 18366

32 CFR

716 18126

33 CFR

165 18446

Proposed Rules:

100 18157

34 CFR

Proposed Rules:

Ch. III 18508
600 18638
668 18638

40 CFR

52 ..... 18126, 18872
60 18448

Proposed Rules:

52 ..... 18160, 18509
81 18509
721 ..... 18173, 18179

44 CFR

64 18129

47 CFR

1 18131
2 18131
15 18131
18 18131
22 18131
24 18131
25 18131
27 18131
73 18131
90 18131
95 18131
97 18131
101 18131

Proposed Rules:

15 18901
76 18527

48 CFR

Proposed Rules:

12 18181
19 18181
36 18181
43 18181
52 18181

50 CFR

92 18455
217 18459
635 ..... 18152, 18153, 18812
648 18873

Proposed Rules:

20 18532

LIST OF PUBLIC LAWS

Note: No public bills which have become law were received by the Office of the Federal Register for inclusion in today's **List of Public Laws**.

Last List March 30, 2020

Public Laws Electronic Notification Service (PENS)

PENS is a free email notification service of newly enacted public laws. To subscribe, go to *https://listserv.gsa.gov/cgi-bin/wa.exe?SUBED1=PUBLAWS-L&A=1*

Note: This service is strictly for email notification of new laws. The text of laws is not available through this service. **PENS** cannot respond to specific inquiries sent to this address.