AUTHENTICATED
U.S. GOVERNMENT
INFORMATION
GPO

FEDERAL REGISTER

Vol. 85 Tuesday,
No. 47 March 10, 2020

Pages 13719–14142

OFFICE OF THE FEDERAL REGISTER

The **FEDERAL REGISTER** (ISSN 0097–6326) is published daily, Monday through Friday, except official holidays, by the Office of the Federal Register, National Archives and Records Administration, under the Federal Register Act (44 U.S.C. Ch. 15) and the regulations of the Administrative Committee of the Federal Register (1 CFR Ch. I). The Superintendent of Documents, U.S. Government Publishing Office, is the exclusive distributor of the official edition. Periodicals postage is paid at Washington, DC.

The **FEDERAL REGISTER** provides a uniform system for making available to the public regulations and legal notices issued by Federal agencies. These include Presidential proclamations and Executive Orders, Federal agency documents having general applicability and legal effect, documents required to be published by act of Congress, and other Federal agency documents of public interest.

Documents are on file for public inspection in the Office of the Federal Register the day before they are published, unless the issuing agency requests earlier filing. For a list of documents currently on file for public inspection, see *www.federalregister.gov.*

The seal of the National Archives and Records Administration authenticates the Federal Register as the official serial publication established under the Federal Register Act. Under 44 U.S.C. 1507, the contents of the **Federal Register** shall be judicially noticed.

The **Federal Register** is published in paper and on 24x microfiche. It is also available online at no charge at *www.govinfo.gov*, a service of the U.S. Government Publishing Office.

The online edition of the **Federal Register** is issued under the authority of the Administrative Committee of the Federal Register as the official legal equivalent of the paper and microfiche editions (44 U.S.C. 4101 and 1 CFR 5.10). It is updated by 6:00 a.m. each day the **Federal Register** is published and includes both text and graphics from Volume 1, 1 (March 14, 1936) forward. For more information, contact the GPO Customer Contact Center, U.S. Government Publishing Office. Phone 202-512-1800 or 866-512-1800 (toll free). E-mail, *gpocusthelp.com.*

The annual subscription price for the **Federal Register** paper edition is $860 plus postage, or $929, for a combined **Federal Register, Federal Register** Index and List of CFR Sections Affected (LSA) subscription; the microfiche edition of the **Federal Register** including the **Federal Register** Index and LSA is $330, plus postage. Six month subscriptions are available for one-half the annual rate. The prevailing postal rates will be applied to orders according to the delivery method requested. The price of a single copy of the daily **Federal Register,** including postage, is based on the number of pages: $11 for an issue containing less than 200 pages; $22 for an issue containing 200 to 400 pages; and $33 for an issue containing more than 400 pages. Single issues of the microfiche edition may be purchased for $3 per copy, including postage. Remit check or money order, made payable to the Superintendent of Documents, or charge to your GPO Deposit Account, VISA, MasterCard, American Express, or Discover. Mail to: U.S. Government Publishing Office—New Orders, P.O. Box 979050, St. Louis, MO 63197-9000; or call toll free 1-866-512-1800, DC area 202-512-1800; or go to the U.S. Government Online Bookstore site, see *bookstore.gpo.gov.*

There are no restrictions on the republication of material appearing in the **Federal Register.**

How To Cite This Publication: Use the volume number and the page number. Example: 85 FR 12345.

Postmaster: Send address changes to the Superintendent of Documents, Federal Register, U.S. Government Publishing Office, Washington, DC 20402, along with the entire mailing label from the last issue received.

SUBSCRIPTIONS AND COPIES

PUBLIC

Subscriptions:

Paper or fiche	**202–512–1800**
Assistance with public subscriptions	**202–512–1806**

General online information **202–512–1530; 1–888–293–6498**

Single copies/back copies:

Paper or fiche	**202–512–1800**
Assistance with public single copies	**1–866–512–1800 (Toll-Free)**

FEDERAL AGENCIES

Subscriptions:

Assistance with Federal agency subscriptions:

Email	*FRSubscriptions@nara.gov*
Phone	**202–741–6000**

The Federal Register Printing Savings Act of 2017 (Pub. L. 115-120) placed restrictions on distribution of official printed copies of the daily **Federal Register** to members of Congress and Federal offices. Under this Act, the Director of the Government Publishing Office may not provide printed copies of the daily **Federal Register** unless a Member or other Federal office requests a specific issue or a subscription to the print edition. For more information on how to subscribe use the following website link: *https://www.gpo.gov/frsubs.*

Printed on recycled paper.

Contents

Federal Register

Vol. 85, No. 47

Tuesday, March 10, 2020

Agricultural Marketing Service
PROPOSED RULES
U.S. Standards for Grades of Grapefruit (Texas and States other than Florida, California, and Arizona), and U.S. Standards for Grades of Oranges (Texas and States other than Florida, California, and Arizona), 13833–13840

Agriculture Department
See Agricultural Marketing Service
See Forest Service
NOTICES
Agency Information Collection Activities; Proposals, Submissions, and Approvals, 13857

Alcohol, Tobacco, Firearms, and Explosives Bureau
NOTICES
Agency Information Collection Activities; Proposals, Submissions, and Approvals:
Application for Registration of Firearms Acquired by Certain Governmental Entities, 13924–13925
Notice of Firearms Manufactured or Imported, 13925–13926
Records of Acquisition and Disposition, Collectors of Firearms, 13925
Supplemental Information on Water Quality Considerations, 13926–13927

Children and Families Administration
NOTICES
Agency Information Collection Activities; Proposals, Submissions, and Approvals:
Survey of Youth Transitioning from Foster Care (New Collection), 13902–13903

Civil Rights Commission
NOTICES
Meetings:
Florida Advisory Committee, 13859
Washington Advisory Committee, 13858–13859

Coast Guard
RULES
Special Local Regulation:
California Half Ironman Triathlon, Oceanside, CA, 13747
San Diego Crew Classic, San Diego, CA, 13747
PROPOSED RULES
Safety Zone:
Cocos Lagoon, Merizo, GU, 13841–13843

Commerce Department
See Foreign-Trade Zones Board
See International Trade Administration
See National Oceanic and Atmospheric Administration

Commodity Futures Trading Commission
NOTICES
Agency Information Collection Activities; Proposals, Submissions, and Approvals:
Provisions Common to Registered Entities, 13876–13877

Defense Department
NOTICES
Charter Renewal:
Federal Advisory Committees, 13877–13878

Drug Enforcement Administration
RULES
Schedules of Controlled Substances:
Placement of Cenobamate in Schedule V, 13741–13746
NOTICES
Bulk Manufacturer of Controlled Substances Application:
S and B Pharma, Inc.; Correction, 13931
Siemens Healthcare Diagnostics Inc., 13928
Sigma Aldrich Research, 13928
Decision and Order:
William S. Husel, D.O., 13929–13931
Importer of Controlled Substances Application:
Arizona Department of Corrections, 13931–13932
Caligor Pharma Services, 13927
Johnson Matthey Inc., 13931
SpecGx LLC, 13927

Education Department
NOTICES
Applications for New Awards:
Magnet Schools Assistance Program, 13878–13885

Energy Department
See Federal Energy Regulatory Commission

Environmental Protection Agency
RULES
Air Quality State Implementation Plans; Approvals and Promulgations:
Alabama; 2010 1-Hour SO_2 National Ambient Air Quality Standard Transport Infrastructure, 13755–13759
Massachusetts; Infrastructure State Implementation Plan Requirements for the 2015 Ozone Standard, 13748–13755
Microorganisms; General Exemptions from Reporting Requirements; Revisions to Recipient Organisms Eligible for Tier I and Tier II Exemptions, 13760–13773
PROPOSED RULES
Preliminary Regulatory Determinations for Contaminants on the Fourth Drinking Water Contaminant Candidate List, 14098–14142
NOTICES
Certain New Chemicals:
Receipt and Status Information for January 2020, 13891–13900

Farm Credit Administration
NOTICES
Privacy Act; Systems of Records, 13900–13902

Federal Aviation Administration
RULES
Airworthiness Directives:
Rolls-Royce Deutschland Ltd and Co KG (Type Certificate Previously Held by Rolls-Royce plc) Turbofan Engines, 13727–13731
Amendment of VOR Federal Airway V–18:
in the Vicinity of Talladega, AL, 13731–13732

Establishment of Area Navigation Routes:
Northeastern United States, 13732–13734

Federal Communications Commission
RULES
Connect America Fund:
Rural Digital Opportunity Fund, 13773–13802
PROPOSED RULES
Petition for Reconsideration:
Wireless E911 Location Accuracy Requirements, 13843

Federal Emergency Management Agency
NOTICES
Assistance to Firefighters Grant Program, 13910–13914

Federal Energy Regulatory Commission
NOTICES
Application:
Port Arthur LNG Phase II, LLC; PALNG Common Facilities Company, LLC, 13890–13891
Combined Filings, 13886–13887, 13889–13890
Complaint:
Edenton Solar, LLC v. Virginia Electric and Power Co., 13885
Initial Market-Based Rate Filings Including Requests for Blanket Section 204 Authorizations:
Pegasus Wind A, LLC, 13885–13886
Petition for Declaratory Order:
Tennessee Gas Pipeline Company, LLC, 13888
Petition for Waiver Determination:
Yuba County Water Agency, 13888–13889
Records Governing Off-the-Record Communications, 13887–13888
Request for Waiver of Determination:
South Feather Water and Power Agency, 13891

Federal Railroad Administration
PROPOSED RULES
Texas Central Railroad High-Speed Rail Safety Standards, 14036–14096

Federal Reserve System
RULES
Regulation A: Extensions of Credit by Federal Reserve Banks, 13723–13724
Regulation D: Reserve Requirements of Depository Institutions, 13724–13725
NOTICES
Change in Bank Control:
Acquisitions of Shares of a Bank or Bank Holding Company, 13902

Fish and Wildlife Service
PROPOSED RULES
Endangered and Threatened Wildlife and Plants:
Removing Lepanthes eltoroensis From the Federal List of Endangered and Threatened Plants, 13844–13856

Food and Drug Administration
PROPOSED RULES
Premarket Tobacco Product Applications and Recordkeeping Requirements, 13840–13841
NOTICES
Charter Renewal:
Gastrointestinal Drugs Advisory Committee, 13905
Guidance:
Type 2 Diabetes Mellitus: Evaluating the Safety of New Drugs for Improving Glycemic Control, 13903–13905
Meetings:
Fiscal Year 2020 Generic Drug Regulatory Science Initiatives; Public Workshop, 13905–13907

Foreign Assets Control Office
RULES
Removal of Terrorism Sanctions Regulations, 13746–13747

Foreign-Trade Zones Board
NOTICES
Proposed Production Activity:
Lake Charles LNG Export Co., LLC, Foreign-Trade Zone 87, Lake Charles, LA, 13859–13860

Forest Service
NOTICES
Request for Nominations:
Pacific Northwest Region Recreation Advisory Committee, 13857–13858

Health and Human Services Department
See Children and Families Administration
See Food and Drug Administration
See National Institutes of Health
NOTICES
Emergency Use Declaration, 13907–13908

Historic Preservation, Advisory Council
NOTICES
Meetings:
Advisory Council Quarterly Business, 13909

Homeland Security Department
See Coast Guard
See Federal Emergency Management Agency
PROPOSED RULES
Privacy Act; Implementation:
Exemptions; Department of Homeland Security/ALL–038 Insider Threat Program System of Records, 13831–13833
NOTICES
Privacy Act; Systems of Records, 13914–13918

Interior Department
See Fish and Wildlife Service
See Land Management Bureau
See National Park Service
See Surface Mining Reclamation and Enforcement Office

Internal Revenue Service
NOTICES
Meetings:
Taxpayer Advocacy Panel Joint Committee, 13979

International Trade Administration
NOTICES
Antidumping or Countervailing Duty Investigations, Orders, or Reviews:
Initiation of Administrative Reviews, 13860–13876

International Trade Commission
NOTICES
Investigations; Determinations, Modifications, and Rulings, etc.:
Ultra-High Molecular Weight Polyethylene from Korea, 13922–13923

Judicial Conference of the United States
NOTICES
Meetings:
Advisory Committee on Criminal Rules, 13924
Advisory Committee on Evidence Rules, 13923–13924

Justice Department
See Alcohol, Tobacco, Firearms, and Explosives Bureau
See Drug Enforcement Administration

Labor Department
NOTICES
Agency Information Collection Activities; Proposals, Submissions, and Approvals:
Report on Occupational Employment and Wages, 13932–13933
Securing Financial Obligations Under the Longshore and Harbor Workers' Compensation Act and its Extensions, 13933

Land Management Bureau
NOTICES
Federal Competitive Coal Lease Sale:
Application COC–78825, Dunn Ranch Tract, CO, 13919–13920
Plats of Survey:
Alaska, 13918–13919

Legal Services Corporation
NOTICES
Application Process for Subgranting 2020 Basic Field Grant Funds Midyear, 13933–13934

Merit Systems Protection Board
NOTICES
Guidance Portal, 13934

National Aeronautics and Space Administration
NOTICES
Reporting Requirements Regarding Findings of Harassment, Sexual Harassment, Other Forms of Harassment, or Sexual Assault, 13934–13942

National Credit Union Administration
PROPOSED RULES
Subordinated Debt, 13982–14033

National Highway Traffic Safety Administration
NOTICES
Grant of Petition for Decision of Inconsequential Noncompliance:
Pirelli Tire, LLC, 13974–13975

National Institutes of Health
NOTICES
Meetings:
Center for Scientific Review, 13908–13909
National Institute of Allergy and Infectious Diseases, 13908

National Oceanic and Atmospheric Administration
RULES
Fisheries of the Exclusive Economic Zone Off Alaska:
Gulf of Alaska; Final 2020 and 2021 Harvest Specifications for Groundfish, 13802–13830
NOTICES
Endangered and Threatened Species:
Take of Anadromous Fish, 13876

National Park Service
NOTICES
National Register of Historic Places:
Pending Nominations and Related Actions, 13920

National Science Foundation
NOTICES
Meetings:
Proposal Review Panel for Physics, 13942–13943

Nuclear Regulatory Commission
NOTICES
Application:
Vogtle Electric Generating Plant, Unit 3; License Amendment, 13944–13948
Applications and Amendments to Facility Operating Licenses and Combined Licenses Involving No Significant Hazards Considerations:
Biweekly Notice, 13948–13953
Indirect Transfer of Licenses; Order:
In the Matter of Arizona Public Service Co.; El Paso Electric Co.; Palo Verde Nuclear Generating Station, Units 1, 2, and 3, and Independent Spent Fuel Storage Installation, 13943–13944

Pension Benefit Guaranty Corporation
NOTICES
Agency Information Collection Activities; Proposals, Submissions, and Approvals:
Liability for Termination of Single-Employer Plans, 13953–13954

Pipeline and Hazardous Materials Safety Administration
NOTICES
Actions on Special Permits:
Hazardous Materials, 13975–13977
Applications for Modifications to Special Permits:
Hazardous Materials, 13978–13979
Applications for New Special Permits:
Hazardous Materials, 13977

Postal Service
NOTICES
International Product Change:
Priority Mail Express International, Priority Mail International and First-Class Package International Service Agreement, 13954
Product Change:
Priority Mail Negotiated Service Agreement, 13954

Presidential Documents
ADMINISTRATIVE ORDERS
StayNTouch, Inc.; Acquisition by Beijing Shiji Information Technology Co., Ltd. (Order of March 6, 2020), 13719–13721

Securities and Exchange Commission
RULES
Exemptions From Investment Adviser Registration for Advisers to Certain Rural Business Investment Companies, 13734–13741
NOTICES
Agency Information Collection Activities; Proposals, Submissions, and Approvals, 13967
Application:
Waterside Capital Corp., 13965–13966
Self-Regulatory Organizations; Proposed Rule Changes:
Cboe EDGA Exchange, Inc., 13957–13961

New York Stock Exchange, LLC; NYSE National, Inc.; NYSE Arca, Inc.; NYSE American LLC, 13961–13962
The Nasdaq Stock Market, LLC, 13954–13957, 13962–13965

Small Business Administration
RULES
Civil Monetary Penalties Inflation Adjustments, 13725–13727

Social Security Administration
NOTICES
Agency Information Collection Activities; Proposals, Submissions, and Approvals, 13967–13969

State Department
NOTICES
Agency Information Collection Activities; Proposals, Submissions, and Approvals:
State Assistance Management System Domestic Results Performance Monitoring Module for the Bureau of Educational and Cultural Affairs, 13969–13970
Designation as Specially Designated Global Terrorist:
Ahmad al-Hamidawi, 13969

Surface Mining Reclamation and Enforcement Office
NOTICES
Agency Information Collection Activities; Proposals, Submissions, and Approvals:
Restrictions on Financial Interests of State Employees, 13921–13922
Rights of Entry, 13920–13921
Technical Evaluations Series, 13922

Trade Representative, Office of United States
NOTICES
Product Exclusions:
China's Acts, Policies, and Practices Related to Technology Transfer, Intellectual Property, and Innovation, 13970–13973
Public Hearings:
Trade Distorting Policies that may be Affecting Seasonal and Perishable Products in U.S. Commerce, 13973

Transportation Department
See Federal Aviation Administration
See Federal Railroad Administration
See National Highway Traffic Safety Administration
See Pipeline and Hazardous Materials Safety Administration

Treasury Department
See Foreign Assets Control Office
See Internal Revenue Service

Separate Parts In This Issue

Part II
National Credit Union Administration, 13982–14033

Part III
Transportation Department, Federal Railroad Administration, 14036–14096

Part IV
Environmental Protection Agency, 14098–14142

Reader Aids

Consult the Reader Aids section at the end of this issue for phone numbers, online resources, finding aids, and notice of recently enacted public laws.

To subscribe to the Federal Register Table of Contents electronic mailing list, go to https://public.govdelivery.com/accounts/USGPOOFR/subscriber/new, enter your e-mail address, then follow the instructions to join, leave, or manage your subscription.

CFR PARTS AFFECTED IN THIS ISSUE

A cumulative list of the parts affected this month can be found in the Reader Aids section at the end of this issue.

3 CFR

Administrative Orders:

Order of March 6, 2020 13719

6 CFR

Proposed Rules:

5 13831

7 CFR

Proposed Rules:

51 13833

12 CFR

201 13723
204 13724

Proposed Rules:

701 13982
702 13982
709 13982
741 13982

13 CFR

107 13725
120 13725
142 13725
146 13725

14 CFR

39 13727
71 (2 documents) 13731, 13732

17 CFR

275 13734

21 CFR

1308 13741

Proposed Rules:

1100 13840
1107 13840
1114 13840

31 CFR

595 13746

33 CFR

100 (2 documents) 13747

Proposed Rules:

165 13841

40 CFR

52 (2 documents) 13748, 13755
725 13760

Proposed Rules:

141 14098

47 CFR

54 13773

Proposed Rules:

9 13843

49 CFR

Proposed Rules:

299 14036

50 CFR

679 13802

Proposed Rules:

17 13844

Federal Register
Vol. 85, No. 47
Tuesday, March 10, 2020

Presidential Documents

Title 3—

The President

Order of March 6, 2020

Regarding the Acquisition of StayNTouch, Inc. by Beijing Shiji Information Technology Co., Ltd.

By the authority vested in me as President by the Constitution and the laws of the United States of America, including section 721 of the Defense Production Act of 1950, as amended (section 721), 50 U.S.C. 4565, it is hereby ordered as follows:

Section 1. *Findings.* (a) There is credible evidence that leads me to believe that (1) Beijing Shiji Information Technology Co., Ltd., a public company organized under the laws of China, and (2) its wholly owned direct subsidiary Shiji (Hong Kong) Ltd., a Hong Kong limited company (together, the ''Purchaser''), through acquiring an interest in StayNTouch, Inc. (''StayNTouch''), a Delaware corporation, might take action that threatens to impair the national security of the United States; and

(b) Provisions of law, other than section 721 and the International Emergency Economic Powers Act (50 U.S.C. 1701 *et seq.*), do not, in my judgment, provide adequate and appropriate authority for me to protect the national security in this matter.

Sec. 2. *Actions Ordered and Authorized.* On the basis of the findings set forth in section 1 of this order, considering the factors described in subsection 721(f) of the Defense Production Act of 1950, as appropriate, and pursuant to my authority under applicable law, including section 721, I hereby order that:

(a) The transaction resulting in the acquisition of StayNTouch by the Purchaser is hereby prohibited, and ownership by the Purchaser of any interest in StayNTouch and its assets, whether effected directly or indirectly through the Purchaser, or through the Purchaser's shareholders, partners, subsidiaries, or affiliates, is also prohibited.

(b) In order to effectuate this order, not later than 120 days after the date of this order, unless such date is extended for a period not to exceed 90 days, on such written conditions as the Committee on Foreign Investment in the United States (CFIUS) may impose, the Purchaser shall divest all interests in:

(i) StayNTouch;

(ii) StayNTouch's assets, intellectual property, technology, data (including customer data managed and stored by StayNTouch), personnel, and customer contracts; and

(iii) any operations developed, held, or controlled, whether directly or indirectly, by StayNTouch at the time of, or since, its acquisition.

Immediately upon divestment, the Purchaser shall certify in writing to CFIUS that such divestment has been effected in accordance with this order and that all steps necessary to fully and permanently abandon the transaction resulting in the acquisition of StayNTouch have been completed.

(c) Immediately from the date of this order until such time as the divestment has been completed and verified to the satisfaction of CFIUS, the Purchaser shall refrain from accessing, and shall ensure that any of its subsidiaries or affiliates refrain from accessing, hotel guest data through StayNTouch. Not later than 7 days after the date of this order, the Purchaser shall ensure that controls are in place to prevent any such data access

until such time as the divestment has been completed and verified to the satisfaction of CFIUS.

(d) The Purchaser shall not complete a sale or transfer under subsection 2(b) of this section to any third party:

(i) until the Purchaser notifies CFIUS in writing of the intended recipient or buyer; and

(ii) unless 10 business days have passed from the notification in subsection (d)(i) of this section and CFIUS has not issued an objection to the Purchaser.

Among the factors CFIUS may consider in reviewing the proposed sale or transfer are whether the buyer or transferee: is a United States citizen or is owned by United States citizens; has or has had a direct or indirect contractual, financial, familial, employment, or other close and continuous relationship with the Purchaser, or its officers, employees, or shareholders; and can demonstrate a willingness and ability to support compliance with this order. In addition, CFIUS may consider whether the proposed sale or transfer would threaten to impair the national security of the United States or undermine the purposes of this order.

(e) From the date of this order until the Purchaser provides a certification of divestment to CFIUS pursuant to subsection (b) of this section, the Purchaser and StayNTouch shall certify to CFIUS on a weekly basis that they are in compliance with this order and include a description of efforts to divest StayNTouch and a timeline for projected completion of remaining actions.

(f) Any transaction or other device entered into or employed for the purpose of, or with the effect of, evading or circumventing this order is prohibited.

(g) Without limitation on the exercise of authority by any agency under other provisions of law, and until such time as the divestment is completed and verified to the satisfaction of CFIUS, CFIUS is authorized to implement measures it deems necessary and appropriate to verify compliance with this order and to ensure that StayNTouch's operations are carried out in such a manner as to ensure protection of the national security interests of the United States. Such measures may include the following: on reasonable notice to the Purchaser and StayNTouch, employees of the United States Government, as designated by CFIUS, shall be permitted access, for purposes of verifying compliance with this order, to all premises and facilities of StayNTouch located in the United States:

(i) to inspect and copy any books, ledgers, accounts, correspondence, memoranda, and other records and documents in the possession or under the control of the Purchaser or StayNTouch that concern any matter relating to this order;

(ii) to inspect or audit any information systems, networks, hardware, software, data, communications, or property in the possession or under the control of the Purchaser or StayNTouch; and

(iii) to interview officers, employees, or agents of the Purchaser or StayNTouch concerning any matter relating to this order.

CFIUS shall conclude its verification procedures within 90 days after the certification of divestment is provided to CFIUS pursuant to subsection (b) of this section.

(h) If any provision of this order, or the application of any provision to any person or circumstances, is held to be invalid, the remainder of this order and the application of its other provisions to any other persons or circumstances shall not be affected thereby. If any provision of this order, or the application of any provision to any person of circumstances, is held to be invalid because of the lack of certain procedural requirements, the relevant executive branch officials shall implement those procedural requirements.

(i) The Attorney General is authorized to take any steps necessary to enforce this order.

Sec. 3. *Reservation.* I hereby reserve my authority to issue further orders with respect to the Purchaser and StayNTouch as shall in my judgment be necessary to protect the national security of the United States.

Sec. 4. *Publication and Transmittal.* (a) This order shall be published in the *Federal Register.*

(b) I hereby direct the Secretary of the Treasury to transmit a copy of this order to the appropriate parties named in section 1 of this order.

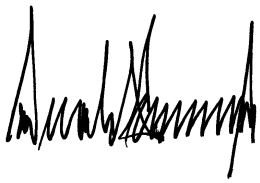

THE WHITE HOUSE,
March 6, 2020.

[FR Doc. 2020–05011
Filed 3–9–20; 8:45 am]
Billing code 3295–F0–P

Rules and Regulations

Federal Register
Vol. 85, No. 47
Tuesday, March 10, 2020

This section of the FEDERAL REGISTER contains regulatory documents having general applicability and legal effect, most of which are keyed to and codified in the Code of Federal Regulations, which is published under 50 titles pursuant to 44 U.S.C. 1510.

The Code of Federal Regulations is sold by the Superintendent of Documents.

FEDERAL RESERVE SYSTEM

12 CFR Part 201

[Docket No. R–1697]

RIN 7100–AF72

Regulation A: Extensions of Credit by Federal Reserve Banks

AGENCY: Board of Governors of the Federal Reserve System.

ACTION: Final rule.

SUMMARY: The Board of Governors of the Federal Reserve System (''Board'') has adopted final amendments to its Regulation A to reflect the Board's approval of a decrease in the rate for primary credit at each Federal Reserve Bank. The secondary credit rate at each Reserve Bank automatically decreased by formula as a result of the Board's primary credit rate action.

DATES:

Effective date: The amendments to part 201 (Regulation A) are effective March 10, 2020.

Applicability date: The rate changes for primary and secondary credit were applicable on March 4, 2020.

FOR FURTHER INFORMATION CONTACT: Sophia H. Allison, Senior Special Counsel (202–452–3565), Legal Division, or Lyle Kumasaka, Lead Financial Institution & Policy Analyst (202–452–2382), or Laura Lipscomb, Assistant Director (202–912–7964), Division of Monetary Affairs; for users of Telecommunications Device for the Deaf (TDD) only, contact 202–263–4869; Board of Governors of the Federal Reserve System, 20th and C Streets NW, Washington, DC 20551.

SUPPLEMENTARY INFORMATION: The Federal Reserve Banks make primary and secondary credit available to depository institutions as a backup source of funding on a short-term basis, usually overnight. The primary and secondary credit rates are the interest rates that the twelve Federal Reserve Banks charge for extensions of credit under these programs. In accordance with the Federal Reserve Act, the primary and secondary credit rates are established by the boards of directors of the Federal Reserve Banks, subject to the review and determination of the Board.

On March 3, 2020, the Board voted to approve a ½ percentage point decrease in the primary credit rate in effect at each of the twelve Federal Reserve Banks, thereby decreasing from 2.25 percent to 1.75 percent the rate that each Reserve Bank charges for extensions of primary credit. In addition, the Board had previously approved the renewal of the secondary credit rate formula, the primary credit rate plus 50 basis points. Under the formula, the secondary credit rate in effect at each of the twelve Federal Reserve Banks decreased by ½ percentage point as a result of the Board's primary credit rate action, thereby decreasing from 2.75 percent to 2.25 percent the rate that each Reserve Bank charges for extensions of secondary credit. The amendments to Regulation A reflect these rate changes.

The ½ percentage point decrease in the primary credit rate was associated with a ½ percentage point decrease in the target range for the federal funds rate (from a target range of 1½ percent to 1¾ percent to a target range of 1 percent to 1¼ percent) announced by the Federal Open Market Committee on March 3, 2020, as described in the Board's amendment of its Regulation D published elsewhere in today's **Federal Register.**

Administrative Procedure Act

In general, the Administrative Procedure Act (''APA'')[1] imposes three principal requirements when an agency promulgates legislative rules (rules made pursuant to Congressionally-delegated authority): (1) Publication with adequate notice of a proposed rule; (2) followed by a meaningful opportunity for the public to comment on the rule's content; and (3) publication of the final rule not less than 30 days before its effective date. The APA provides that notice and comment procedures do not apply if the agency for good cause finds them to be ''unnecessary, impracticable, or contrary to the public interest.''[2] Section 553(d) of the APA also provides that publication at least 30 days prior to a rule's effective date is not required for (1) a substantive rule which grants or recognizes an exemption or relieves a restriction; (2) interpretive rules and statements of policy; or (3) a rule for which the agency finds good cause for shortened notice and publishes its reasoning with the rule.[3] The APA further provides that the notice, public comment, and delayed effective date requirements of 5 U.S.C. 553 do not apply ''to the extent that there is involved . . . a matter relating to agency management or personnel or to public property, *loans,* grants, benefits, or contracts.''[4]

Regulation A establishes the interest rates that the twelve Reserve Banks charge for extensions of primary credit and secondary credit. The Board has determined that the notice, public comment, and delayed effective date requirements of the APA do not apply to these final amendments to Regulation A. The amendments involve a matter relating to loans and are therefore exempt under the terms of the APA. Furthermore, because delay would undermine the Board's action in responding to economic data and conditions, the Board has determined that ''good cause'' exists within the meaning of the APA to dispense with the notice, public comment, and delayed effective date procedures of the APA with respect to the final amendments to Regulation A.

Regulatory Flexibility Analysis

The Regulatory Flexibility Act (''RFA'') does not apply to a rulemaking where a general notice of proposed rulemaking is not required.[5] As noted previously, a general notice of proposed rulemaking is not required if the final rule involves a matter relating to loans. Furthermore, the Board has determined that it is unnecessary and contrary to the public interest to publish a general notice of proposed rulemaking for this final rule. Accordingly, the RFA's requirements relating to an initial and final regulatory flexibility analysis do not apply.

[1] 5 U.S.C. 551 *et seq.*

[2] 5 U.S.C. 553(b)(3)(A).

[3] 5 U.S.C. 553(d).

[4] 5 U.S.C. 553(a)(2) (emphasis added).

[5] 5 U.S.C. 603, 604.

Paperwork Reduction Act

In accordance with the Paperwork Reduction Act (''PRA'') of 1995,[6] the Board reviewed the final rule under the authority delegated to the Board by the Office of Management and Budget. The final rule contains no requirements subject to the PRA.

12 CFR Chapter II

List of Subjects in 12 CFR Part 201

Banks, Banking, Federal Reserve System, Reporting and recordkeeping.

Authority and Issuance

For the reasons set forth in the preamble, the Board is amending 12 CFR chapter II to read as follows:

PART 201—EXTENSIONS OF CREDIT BY FEDERAL RESERVE BANKS (REGULATION A)

■ 1. The authority citation for part 201 continues to read as follows:

Authority: 12 U.S.C. 248(i)–(j), 343 *et seq.,* 347a, 347b, 347c, 348 *et seq.,* 357, 374, 374a, and 461.

■ 2. In § 201.51, revise paragraphs (a) and (b) to read as follows:

§ 201.51 Interest rates applicable to credit extended by a Federal Reserve Bank.[3]

(a) *Primary credit.* The interest rate at each Federal Reserve Bank for primary credit provided to depository institutions under § 201.4(a) is 1.75 percent.

(b) *Secondary credit.* The interest rate at each Federal Reserve Bank for secondary credit provided to depository institutions under § 201.4(b) is 2.25 percent.

* * * * *

By order of the Board of Governors of the Federal Reserve System, March 4, 2020.

Michele Taylor Fennell,

Assistant Secretary of the Board.

[FR Doc. 2020–04825 Filed 3–9–20; 8:45 am]

BILLING CODE 6210–01–P

[6] 44 U.S.C. 3506; see 5 CFR part 1320 Appendix A.1.

[3] The primary, secondary, and seasonal credit rates described in this section apply to both advances and discounts made under the primary, secondary, and seasonal credit programs, respectively.

FEDERAL RESERVE SYSTEM

12 CFR Part 204

[Docket No. R–1698]

RIN 7100–AF73

Regulation D: Reserve Requirements of Depository Institutions

AGENCY: Board of Governors of the Federal Reserve System.

ACTION: Final rule.

SUMMARY: The Board of Governors of the Federal Reserve System (''Board'') is amending Regulation D (Reserve Requirements of Depository Institutions) to revise the rate of interest paid on balances maintained to satisfy reserve balance requirements (''IORR'') and the rate of interest paid on excess balances (''IOER'') maintained at Federal Reserve Banks by or on behalf of eligible institutions. The final amendments specify that IORR is 1.10 percent and IOER is 1.10 percent, a 0.50 percentage point decrease from their prior levels. The amendments are intended to enhance the role of such rates of interest in maintaining the Federal funds rate in the target range established by the Federal Open Market Committee (''FOMC'' or ''Committee'').

DATES:

Effective date: The amendments to part 204 (Regulation D) are effective March 10, 2020.

Applicability date: The IORR and IOER rate changes were applicable on March 4, 2020.

FOR FURTHER INFORMATION CONTACT: Sophia H. Allison, Senior Special Counsel (202–452–3565), Legal Division, or Francis Martinez, Senior Financial Institution & Policy Analyst (202–245–4217), or Laura Lipscomb, Assistant Director (202–912–7964), Division of Monetary Affairs; for users of Telecommunications Device for the Deaf (TDD) only, contact 202–263–4869; Board of Governors of the Federal Reserve System, 20th and C Streets NW, Washington, DC 20551.

SUPPLEMENTARY INFORMATION:

I. Statutory and Regulatory Background

For monetary policy purposes, section 19 of the Federal Reserve Act (''Act'') imposes reserve requirements on certain types of deposits and other liabilities of depository institutions.[1] Regulation D, which implements section 19 of the Act, requires that a depository institution meet reserve requirements by holding cash in its vault, or if vault cash is insufficient, by maintaining a balance in an account at a Federal Reserve Bank (''Reserve Bank'').[2] Section 19 also provides that balances maintained by or on behalf of certain institutions in an account at a Reserve Bank may receive earnings to be paid by the Reserve Bank at least once each quarter, at a rate or rates not to exceed the general level of short-term interest rates.[3] Institutions that are eligible to receive earnings on their balances held at Reserve Banks (''eligible institutions'') include depository institutions and certain other institutions.[4] Section 19 also provides that the Board may prescribe regulations concerning the payment of earnings on balances at a Reserve Bank.[5] Prior to these amendments, Regulation D specified a rate of 1.60 percent for both IORR and IOER.[6]

II. Amendments to IORR and IOER

The Board is amending § 204.10(b)(5) of Regulation D to specify that IORR is 1.10 percent and IOER is 1.10 percent. This 0.50 percentage point decrease in each rate was associated with a decrease in the target range for the federal funds rate, from a target range of 1½ to 1¾ percent to a target range of 1 to 1¼ percent, announced by the FOMC on March 3, 2020 with an effective date of March 4, 2020. The FOMC's press release on the same day as the announcement noted that:

> The fundamentals of the U.S. economy remain strong. However, the coronavirus poses evolving risks to economic activity. In light of these risks and in support of achieving its maximum employment and price stability goals, the Federal Open Market Committee decided today to lower the target range for the federal funds rate by ½ percentage point, to 1 to 1¼ percent. The Committee is closely monitoring developments and their implications for the economic outlook and will use its tools and act as appropriate to support the economy.

The Federal Reserve Implementation Note released simultaneously with the announcement stated:

The Board of Governors of the Federal Reserve System voted unanimously to set the interest rate paid on required and excess reserve balances at 1.10 percent, effective March 4, 2020.

As a result, the Board is amending § 204.10(b)(5) of Regulation D to change IORR to 1.10 percent and IOER to 1.10 percent.

[1] 12 U.S.C. 461(b).

[2] 12 CFR 204.5(a)(1).

[3] 12 U.S.C. 461(b)(1)(A) & (b)(12)(A).

[4] See 12 U.S.C. 461(b)(1)(A) & (b)(12)(C); see also 12 CFR 204.2(y).

[5] See 12 U.S.C. 461(b)(12)(B).

[6] See 12 CFR 204.10(b)(5).

III. Administrative Procedure Act

In general, the Administrative Procedure Act (''APA'')[7] imposes three principal requirements when an agency promulgates legislative rules (rules made pursuant to Congressionally-delegated authority): (1) Publication with adequate notice of a proposed rule; (2) followed by a meaningful opportunity for the public to comment on the rule's content; and (3) publication of the final rule not less than 30 days before its effective date. The APA provides that notice and comment procedures do not apply if the agency for good cause finds them to be ''unnecessary, impracticable, or contrary to the public interest.''[8] Section 553(d) of the APA also provides that publication at least 30 days prior to a rule's effective date is not required for (1) a substantive rule which grants or recognizes an exemption or relieves a restriction; (2) interpretive rules and statements of policy; or (3) a rule for which the agency finds good cause for shortened notice and publishes its reasoning with the rule.[9]

The Board has determined that good cause exists for finding that the notice, public comment, and delayed effective date provisions of the APA are unnecessary, impracticable, or contrary to the public interest with respect to these final amendments to Regulation D. The rate changes for IORR and IOER that are reflected in the final amendments to Regulation D were made with a view towards accommodating commerce and business and with regard to their bearing upon the general credit situation of the country. Notice and public comment would prevent the Board's action from being effective as promptly as necessary in the public interest and would not otherwise serve any useful purpose. Notice, public comment, and a delayed effective date would create uncertainty about the finality and effectiveness of the Board's action and undermine the effectiveness of that action. Accordingly, the Board has determined that good cause exists to dispense with the notice, public comment, and delayed effective date procedures of the APA with respect to these final amendments to Regulation D.

IV. Regulatory Flexibility Analysis

The Regulatory Flexibility Act (''RFA'') does not apply to a rulemaking where a general notice of proposed rulemaking is not required.[10] As noted previously, the Board has determined that it is unnecessary and contrary to the public interest to publish a general notice of proposed rulemaking for this final rule. Accordingly, the RFA's requirements relating to an initial and final regulatory flexibility analysis do not apply.

V. Paperwork Reduction Act

In accordance with the Paperwork Reduction Act (''PRA'') of 1995,[11] the Board reviewed the final rule under the authority delegated to the Board by the Office of Management and Budget. The final rule contains no requirements subject to the PRA.

List of Subjects in 12 CFR Part 204

Banks, Banking, Reporting and recordkeeping requirements.

Authority and Issuance

For the reasons set forth in the preamble, the Board amends 12 CFR part 204 as follows:

PART 204—RESERVE REQUIREMENTS OF DEPOSITORY INSTITUTIONS (REGULATION D)

■ 1. The authority citation for part 204 continues to read as follows:

Authority: 12 U.S.C. 248(a), 248(c), 461, 601, 611, and 3105.

■ 2. Section 204.10 is amended by revising paragraph (b)(5) to read as follows:

§ 204.10 Payment of interest on balances.

* * * * *

(b) * * *

(5) The rates for IORR and IOER are:

TABLE 1 TO PARAGRAPH (b)(5)

	Rate (percent)
IORR	1.10
IOER	1.10

By order of the Board of Governors of the Federal Reserve System, March 4, 2020.

Michele Taylor Fennell,

Assistant Secretary of the Board.

[FR Doc. 2020–04826 Filed 3–9–20; 8:45 am]

BILLING CODE 6210–01–P

[7] 5 U.S.C. 551 *et seq.*

[8] 5 U.S.C. 553(b)(3)(A).

[9] 5 U.S.C. 553(d).

[10] 5 U.S.C. 603, 604.

[11] 44 U.S.C. 3506; see 5 CFR part 1320 Appendix A.1.

SMALL BUSINESS ADMINISTRATION

13 CFR Parts 107, 120, 142, and 146

RIN 3245–AH24

Civil Monetary Penalties Inflation Adjustments

AGENCY: U.S. Small Business Administration.

ACTION: Final rule.

SUMMARY: The Small Business Administration (SBA) is amending its regulations to adjust for inflation the amount of certain civil monetary penalties that are within the jurisdiction of the agency. These adjustments comply with the requirement in the Federal Civil Penalties Inflation Adjustment Act of 1990, as amended by the Federal Civil Penalties Inflation Adjustment Act Improvements Act of 2015, to make annual adjustments to the penalties.

DATES: This rule is effective March 10, 2020.

FOR FURTHER INFORMATION CONTACT: Arlene Embrey, 202–205–6976, or at *arlene.embrey@sba.gov.*

SUPPLEMENTARY INFORMATION:

I. Background

On November 2, 2015, the Federal Civil Penalties Inflation Adjustment Act Improvements Act of 2015 (the Act), Public Law 114–74, 129 Stat. 584, was enacted. The Act amended the Federal Civil Penalties Inflation Adjustment Act of 1990, Public Law 101–410, 104 Stat 890 (the 1990 Inflation Adjustment Act), to improve the effectiveness of civil monetary penalties and to maintain their deterrent effect. The Act required agencies to issue a final rule by August 1, 2016, to adjust the level of civil monetary penalties with an initial ''catch-up'' adjustment and to annually adjust these monetary penalties for inflation by January 15 of each subsequent year. The Act authorizes agencies to implement the annual adjustments without regard to the requirements for public notice and comment or delayed effective date under the Administrative Procedure Act (APA), 5 U.S.C. 553(b)(3)(B) and (d)(3), respectively.

In addition, based on the definition of a ''civil monetary penalty'' in the 1990 Inflation Adjustment Act, agencies are to make adjustments only to the civil penalties that (i) are for a specific monetary amount as provided by Federal law or have a maximum amount provided for by Federal law; (ii) are assessed or enforced by an agency; and (iii) are enforced or assessed in an

administrative proceeding or a civil action in the Federal courts. Therefore, penalties that are stated as a percentage of an indeterminate amount or as a function of a violation (penalties that encompass actual damages incurred) are not to be adjusted.

SBA published in the **Federal Register** an interim final rule with its initial adjustments to the civil monetary penalties, including an initial ''catch-up'' adjustment, on May 19, 2016 (81 FR 31489), with an effective date of August 1, 2016. SBA published its first annual adjustments to the monetary penalties on February 9, 2017 (82 FR 9967), with an immediate effective date. SBA published its subsequent annual adjustments for 2018 on February 21, 2018 (83 FR 7361), and for 2019 on April 1, 2019 (84 FR 12059), both with immediate effective dates. This rule will establish the adjusted penalty amounts for 2020 with immediate effective date upon publication.

On December 16, 2019, the Office of Management and Budget published its annual guidance memorandum for 2020 civil monetary penalties inflation adjustments (M–20–05, Implementation of Penalty Inflation Adjustments for 2020, Pursuant to the Federal Civil Penalties Inflation Adjustment Act Improvements Act of 2015). The guidance memorandum provides the formula for calculating the annual adjustments based on the Consumer Price Index for all Urban Consumers (CPI–U) for the month of October preceding the adjustment, and specifically on the change between the October CPI–U preceding the date of adjustment and the prior year's CPI–U. Based on this methodology, the 2020 civil monetary penalty inflation adjustment is October 2019 CPI–U (257.346)/October 2018 CPI–U (252.885) = 1.01764. The annual adjustments identified in this rule were obtained by applying this multiplier of 1.01764 to the most recently adjusted penalty amounts that were published in SBA's 2019 adjustments to civil monetary penalties (84 FR 12059, April 1, 2019).

II. Civil Money Penalties Adjusted by This Rule

This rule adjusts civil monetary penalties authorized by the Small Business Act, the Small Business Investment Act of 1958 (SBIAct), the Program Fraud Civil Remedies Act, and the Byrd Amendment to the Federal Regulation of Lobbying Act. These penalties and the implementing regulations are discussed below.

1. 13 CFR 107.665—Civil Penalties

SBA licenses, regulates and provides financial assistance to financial entities called small business investment companies (SBICs). Pursuant to section 315 of the SBIAct, 15 U.S.C. 687g, SBA may impose a penalty on any SBIC for each day that it fails to comply with SBA's regulations or directives governing the filing of regular or special reports. The penalty for non-compliance is incorporated in § 107.665 of the SBIC program regulations.

This rule amends § 107.665 to adjust the current civil penalty from $266 to $271 per day of failure to file. The current civil penalty of $266 was multiplied by the multiplier of 1.01764 to reach a product of $271, rounded to the nearest dollar.

2. 13 CFR 120.465—Civil Penalty for Late Submission of Required Reports

According to the regulations at § 120.465, any SBA Supervised Lender, as defined in 13 CFR 120.10, that violates a regulation or written directive issued by the SBA Administrator regarding the filing of any regular or special report is subject to the civil penalty amount stated in § 120.465(b) for each day the company fails to file the report, unless the SBA Supervised Lender can show that there is reasonable cause for its failure to file. This penalty is authorized by section 23(j)(1) of the Small Business Act, 15 U.S.C. 650(j)(1).

This rule amends § 120.465(b) to adjust the current civil penalty from $6,623 to $6,740 per day of failure to file. The current civil penalty of $6,623 was multiplied by the multiplier of 1.01764 to reach a product of $6,740, rounded to the nearest dollar.

3. 13 CFR 142.1—Overview of Regulations

SBA has promulgated regulations at 13 CFR part 142 to implement the civil penalties authorized by the Program Fraud Civil Remedies Act of 1986 (PFCRA), 31 U.S.C. 3801–3812. Under the current regulation at 13 CFR 142.1(b), a person who submits, or causes to be submitted, a false claim or a false statement to SBA is subject to a civil penalty of not more than $11,463, for each statement or claim. The adjusted civil penalty amount was calculated by multiplying the current civil penalty of $11,463 by the multiplier of 1.01764 to reach a product of $11,665, rounded to the nearest dollar.

4. 13 CFR 146.400—Penalties

SBA's regulations at 13 CFR part 146 govern lobbying activities by recipients of federal financial assistance. These regulations implement the authority in 31 U.S.C. 1352, which was established in 1989, and impose penalties on any recipient that fails to comply with certain requirements in the part. Specifically, under § 146.400(a) and (b), penalties may be imposed on those who make prohibited expenditures or fail to file the required disclosure forms or to amend such forms, if necessary.

This rule amends § 146.400(a) and (b) to adjust the current civil penalty amounts to ''not less than $20,489 and not more than $204,892.'' The current civil penalty amounts of $20,134 and $201,340 were multiplied by the multiplier of 1.01764 to reach a product of $20,489 and $204,892, respectively, rounded to the nearest dollar.

This rule also amends § 146.400(e) to adjust the civil penalty that may be imposed for a first-time violation of § 146.400(a) and (b) to $20,489 and to adjust the civil penalty that may be imposed for second and subsequent offenses to ''not less than $20,489 and not more than $204,892.'' The current civil penalty amounts of $20,134 and $201,340 were multiplied by the multiplier of 1.01764 to reach a product of $20,489 and $204,892 respectively, rounded to the nearest dollar.

III. Justification for Final Rule

The Act provides that agencies shall annually adjust civil monetary penalties for inflation notwithstanding Section 553 of the APA. Additionally, the Act provides a non-discretionary cost-of-living formula for annual adjustment of the civil monetary penalties. For these reasons, the requirements in sections 553(b), (c), and (d) of the APA, relating to notice and comment and requiring that a rule be effective 30 days after publication in the **Federal Register**, are inapplicable.

IV. Justification for Immediate Effective Date

Section 553(d) requires agencies to publish their rules at least 30 days before their effective dates, except if the agency finds for good cause that the delay is impracticable, unnecessary, or contrary to the public interest. By expressly exempting this rule from section 553, the Act has provided SBA with the good cause justification for this rule to become effective on the date it is published in the **Federal Register**.

Compliance With Executive Orders 12866, 12988, 13132, 13771, and the Paperwork Reduction Act (44 U.S.C. Ch. 35) and the Regulatory Flexibility Act (5 U.S.C. 601–612).

Executive Order 12866

The Office of Management and Budget has determined that this final rule is not a significant regulatory action under Executive Order 12866. This is also not a major rule under the Congressional Review Act, 5 U.S.C. 800.

Executive Order 12988

This action meets applicable standards set forth in Sections 3(a) and 3(b)(2) of Executive Order 12988, Civil Justice Reform, to minimize litigation, eliminate ambiguity, and reduce burden. The action does not have retroactive or preemptive effect.

Executive Order 13132

For the purpose of Executive Order 13132, SBA has determined that the rule will not have substantial direct effects on the States, on the relationship between the national government and the States, or on the distribution of power and responsibilities among the various levels of government. Therefore, this final rule has no federalism implications warranting preparation of a federalism assessment.

Executive Order 13771

This rule is not an Executive Order 13771 regulatory action, because this rule is not significant under Executive Order 12866.

Paperwork Reduction Act

SBA has determined that this rule does not impose additional reporting or recordkeeping requirements.

Regulatory Flexibility Act

The Regulatory Flexibility Act (''RFA'') requires agencies to consider the effect of their regulatory actions on small entities, including small non-profit businesses, and small local governments. Pursuant to the RFA, when an agency issues a rule, the agency must prepare an analysis that describes whether the impact of the rule will have a significant economic impact on a substantial number of such small entities. However, the RFA requires such analysis only where notice and comment rulemaking are required. As stated above, SBA has express statutory authority to issue this rule without regard to the notice and comment requirement of the APA. Since notice and comment is not required before this rule is issued, SBA is not required to prepare a regulatory analysis.

List of Subjects

13 CFR Part 107

Investment companies, Loan programs-business, Reporting and recordkeeping requirements, Small businesses.

13 CFR Part 120

Loan programs-business, Reporting and recordkeeping requirements, Small businesses.

13 CFR Part 142

Administrative practice and procedure, Claims, Fraud, Penalties.

13 CFR Part 146

Government contracts, Grant programs, Loan programs, Lobbying, Penalties, Reporting and recordkeeping requirements.

For the reasons set forth in the preamble, SBA amends 13 CFR parts 107, 120, 142, and 146 as follows:

PART 107—SMALL BUSINESS INVESTMENT COMPANIES

■ 1. The authority citation for part 107 continues to read as follows:

Authority: 15 U.S.C. 681, 683, 687(c), 687b, 687d, 687g, 687m.

§ 107.665 [Amended]

■ 2. In § 107.665, remove ''$266'' and add in its place ''$271''.

PART 120—BUSINESS LOANS

■ 3. The authority citation for part 120 continues to read as follows:

Authority: 15 U.S.C. 634(b) (6), (b) (7), (b) (14), (h), and note, 636(a), (h) and (m), 650, 687(f), 696(3), and 697(a) and (e); Pub. L. 111–5, 123 Stat. 115, Pub. L. 111–240, 124 Stat. 2504; Pub. L. 114–38, 129 Stat.437.

§ 120.465 [Amended]

■ 4. In § 120.465, amend paragraph (b) by removing ''$6,623'' and adding in its place ''$6,740''.

PART 142—PROGRAM FRAUD CIVIL REMEDIES ACT REGULATIONS

■ 5. The authority citation for part 142 continues to read as follows:

Authority: 15 U.S.C. 634(b); 31 U.S.C. 3803(g)(2).

§ 142.1 [Amended]

■ 6. In § 142.1, amend paragraph (b) by removing ''$11,463'' and adding in its place ''$11,665''.

PART 146—NEW RESTRICTIONS ON LOBBYING

■ 7. The authority citation for part 146 continues to read as follows:

Authority: Section 319, Pub. L. 101–121 (31 U.S.C. 1352); 15 U.S.C. 634(b)(6).

§ 146.400 [Amended]

■ 8. Amend § 146.400 by removing ''$20,134'' wherever it appears and adding in its place ''$20,489'' and by removing ''$201,340'' wherever it appears and adding in its place ''$204,892''.

Dated: February 24, 2020.

Jovita Carranza,

Administrator.

[FR Doc. 2020–04278 Filed 3–9–20; 8:45 am]

BILLING CODE 8026–03–P

DEPARTMENT OF TRANSPORTATION

Federal Aviation Administration

14 CFR Part 39

[Docket No. FAA–2020–0179; Project Identifier MCAI–2019–00125–E; Amendment 39–21102; AD 2020–05–01]

RIN 2120–AA64

Airworthiness Directives; Rolls-Royce Deutschland Ltd & Co KG (Type Certificate Previously Held by Rolls-Royce plc) Turbofan Engines

AGENCY: Federal Aviation Administration (FAA), DOT.

ACTION: Final rule; request for comments.

SUMMARY: The FAA is adopting a new airworthiness directive (AD) for all Rolls-Royce Deutschland Ltd. & Co KG (RRD) Trent 1000–AE3, Trent 1000–CE3, Trent 1000–D3, Trent 1000–G3, Trent 1000–H3, Trent 1000–J3, Trent 1000–K3, Trent 1000–L3, Trent 1000–M3, Trent 1000–N3, Trent 1000–P3, Trent 1000–Q3, and Trent 1000–R3 model turbofan engines. This AD requires initial and repetitive borescope inspections (BSI) of the high-pressure turbine (HPT) blades. This AD also requires replacement of HPT blades with parts eligible for installation when the HPT blades fail inspection or reach the new life limit. This AD was prompted by the manufacturer identifying that the HPT blades may fail prematurely. The FAA is issuing this AD to address the unsafe condition on these products.

DATES: This AD is effective March 25, 2020.

The Director of the Federal Register approved the incorporation by reference of a certain publication listed in this AD as of March 25, 2020.

The FAA must receive comments on this AD by April 24, 2020.

ADDRESSES: You may send comments, using the procedures found in 14 CFR 11.43 and 11.45, by any of the following methods:

- *Federal eRulemaking Portal:* Go to *https://www.regulations.gov.* Follow the instructions for submitting comments.
- *Fax:* 202–493–2251.
- *Mail:* U.S. Department of Transportation, Docket Operations, M–30, West Building Ground Floor, Room W12–140, 1200 New Jersey Avenue SE, Washington, DC 20590.
- *Hand Delivery:* U.S. Department of Transportation, Docket Operations, M–30, West Building Ground Floor, Room W12–140, 1200 New Jersey Avenue SE, Washington, DC 20590, between 9 a.m. and 5 p.m., Monday through Friday, except Federal holidays.

For service information identified in this final rule, contact Rolls-Royce Deutschland Ltd & Co KG, Eschenweg 11, 15827 Blankenfelde-Mahlow, Germany; phone: +49 (0) 33 708 6 0; email: *https://www.rolls-royce.com/contact-us.aspx.* You may view this service information at the FAA, Engine and Propeller Standards Branch, 1200 District Avenue, Burlington, MA 01803. For information on the availability of this material at the FAA, call 781–238–7759. It is also available on the internet at *https://www.regulations.gov* by searching for and locating Docket No. FAA–2020–0179.

Examining the AD Docket

You may examine the AD docket on the internet at *https://www.regulations.gov* by searching for and locating Docket No. FAA–2020–0179; or in person at Docket Operations between 9 a.m. and 5 p.m., Monday through Friday, except Federal holidays. The AD docket contains this final rule, the mandatory continuing airworthiness information (MCAI), the regulatory evaluation, any comments received, and other information. The street address for Docket Operations is listed above. Comments will be available in the AD docket shortly after receipt.

FOR FURTHER INFORMATION CONTACT: Stephen Elwin, Aerospace Engineer, ECO Branch, FAA, 1200 District Avenue, Burlington, MA, 01803; phone: 781–238–7750; fax: 781–238–7236; email: *stephen.l.elwin@faa.gov.*

SUPPLEMENTARY INFORMATION:

Discussion

The European Union Aviation Safety Agency (EASA), which is the Technical Agent for the Member States of the European Community, has issued EASA AD 2019–0099R2, dated September 6, 2019 (referred to after this as ''the MCAI''), to address an unsafe condition for the specified products. The MCAI states:

> In-service experience with Trent 1000 TEN engines has shown that the affected parts may deteriorate, despite being subject to the inspections and life limits as specified in the current Rolls-Royce Time Limits Manual, T-Trent-10RRT, Chapters 05–10 and 05–20.
>
> This condition, if not detected and corrected, could lead to HPT blade failure, possibly resulting in engine in-flight shut-down (IFSD) and consequent reduced control of the aeroplane.
>
> To address this potential unsafe condition, Rolls-Royce developed instructions to de-pair engines with a certain number of combined flight cycles (FC). In addition, an FC limit was determined when one affected engine is installed. Finally, an on-wing borescope inspection method has been introduced, and Rolls-Royce issued the NMSB accordingly.
>
> For the reasons described above, EASA issued AD 2019–0099 (later revised) to require repetitive inspections of the affected parts to detect axial cracking and, depending on findings, removal from service of the engine for in-shop replacement of the affected parts. That [EASA] AD also introduced de-pairing instructions and limitations.
>
> Since EASA AD 2019–0099R1 was issued, it was determined that, since new blades must be installed (in-shop) as replacement, the definition of 'serviceable part' needs to be corrected. Consequently, this [EASA] AD is revised accordingly, deleting reference to used parts that passed an inspection.
>
> This revised [EASA] AD is still considered to be an interim action and further [EASA] AD action is expected.

You may obtain further information by examining the MCAI in the AD docket on the internet at *https://www.regulations.gov* by searching for and locating Docket No. FAA–2020–0179.

Related Service Information Under 1 CFR Part 51

The FAA reviewed RR Alert Non-Modification Service Bulletin (NMSB) Trent 1000 72–AK316, Revision 3, dated July 16, 2019. The NMSB describes procedures for performing a BSI of the HPT blades. This service information is reasonably available because the interested parties have access to it through their normal course of business or by the means identified in the **ADDRESSES** section.

Other Related Service Information

The FAA reviewed RR Service Bulletin (SB) Trent 1000 72–J550, Initial Issue, dated November 21, 2017. The SB introduces HPT blades with optimized cooling.

FAA's Determination

This product has been approved by EASA and is approved for operation in the United States. Pursuant to our bilateral agreement with the European Community, EASA has notified us of the unsafe condition described in the MCAI and service information referenced above. The FAA is issuing this AD because it evaluated all the relevant information provided by EASA and determined the unsafe condition described previously is likely to exist or develop in other products of the same type design.

AD Requirements

This AD requires initial and repetitive BSI of the HPT blades. This AD also requires replacement of the HPT blades with parts eligible for installation when the HPT blades fail inspection or reach the new life limit.

FAA's Justification and Determination of the Effective Date

The FAA has found the risk to the flying public justifies waiving notice and comment prior to adoption of this rule because no domestic operators use this product. It is unlikely that the FAA will receive any adverse comments or useful information about this AD from U.S. operators. Therefore, the FAA finds good cause that notice and opportunity for prior public comment are unnecessary. In addition, for this same reason, the FAA finds that good cause exists for making this amendment effective in less than 30 days.

Comments Invited

This AD is a final rule that involves requirements affecting flight safety and was not preceded by notice and an opportunity for public comment. However, the FAA invites you to send any written data, views, or arguments about this final rule. Send your comments to an address listed under the **ADDRESSES** section. Include the docket number FAA–2020–0179 and Product Identifier MCAI–2019–00125–E at the beginning of your comments. The FAA specifically invites comments on the overall regulatory, economic, environmental, and energy aspects of this final rule. The FAA will consider all comments received by the closing date and may amend this final rule because of those comments.

Except for Confidential Business Information (CBI) as described in the following paragraph, and other information as described in 14 CFR 11.35, the FAA will post all comments received, without change, to *https://www.regulations.gov,* including any personal information you provide. The FAA will also post a report summarizing each substantive verbal contact received about this final rule.

Confidential Business Information

Confidential Business Information (CBI) is commercial or financial information that is both customarily and actually treated as private by its owner. Under the Freedom of Information Act (FOIA) (5 U.S.C. 552), CBI is exempt from public disclosure. If your comments responsive to this AD contain commercial or financial information that is customarily treated as private, that you actually treat as private, and that is relevant or responsive to this AD, it is important that you clearly designate the submitted comments as CBI. Please mark each page of your submission containing CBI as ''PROPIN.'' The FAA will treat such marked submissions as confidential under the FOIA, and they will not be placed in the public docket of this AD. Submissions containing CBI should be sent to Stephen Elwin, Aerospace Engineer, ECO Branch, FAA, 1200 District Avenue, Burlington, MA, 01803. Any commentary that the FAA receives which is not specifically designated as CBI will be placed in the public docket for this rulemaking.

Regulatory Flexibility Act

The requirements of the Regulatory Flexibility Act (RFA) do not apply when an agency finds good cause pursuant to 5 U.S.C. 553 to adopt a rule without prior notice and comment. Because the FAA has determined that it has good cause to adopt this rule without notice and comment, RFA analysis is not required.

Costs of Compliance

The FAA estimates that this AD affects no engines installed on airplanes of U.S. registry.

The FAA estimates the following costs to comply with this AD:

ESTIMATED COSTS

Action	Labor cost	Parts cost	Cost per product	Cost on U.S. operators
BSI the HPT blades	4 work-hours × $85 per hour = $340	$0	$340	$0
Replace the HPT blade set	1,250 work-hours × $85 per hour = $106,250	1,871,100	1,977,350	0

Authority for This Rulemaking

Title 49 of the United States Code specifies the FAA's authority to issue rules on aviation safety. Subtitle I, section 106, describes the authority of the FAA Administrator. ''Subtitle VII: Aviation Programs,'' describes in more detail the scope of the Agency's authority.

The FAA is issuing this rulemaking under the authority described in Subtitle VII, Part A, Subpart III, Section 44701: ''General requirements.'' Under that section, Congress charges the FAA with promoting safe flight of civil aircraft in air commerce by prescribing regulations for practices, methods, and procedures the Administrator finds necessary for safety in air commerce. This regulation is within the scope of that authority because it addresses an unsafe condition that is likely to exist or develop on products identified in this rulemaking action.

This AD is issued in accordance with authority delegated by the Executive Director, Aircraft Certification Service, as authorized by FAA Order 8000.51C. In accordance with that order, issuance of ADs is normally a function of the Compliance and Airworthiness Division, but during this transition period, the Executive Director has delegated the authority to issue ADs applicable to engines, propellers, and associated appliances to the Manager, Engine and Propeller Standards Branch, Policy and Innovation Division.

Regulatory Findings

This AD will not have federalism implications under Executive Order 13132. This AD will not have a substantial direct effect on the States, on the relationship between the national government and the States, or on the distribution of power and responsibilities among the various levels of government.

For the reasons discussed above, I certify this AD:

(1) Is not a ''significant regulatory action'' under Executive Order 12866, and

(2) Will not affect intrastate aviation in Alaska.

List of Subjects in 14 CFR Part 39

Air transportation, Aircraft, Aviation safety, Incorporation by reference, Safety.

Adoption of the Amendment

Accordingly, under the authority delegated to me by the Administrator, the FAA amends 14 CFR part 39 as follows:

PART 39—AIRWORTHINESS DIRECTIVES

■ 1. The authority citation for part 39 continues to read as follows:

Authority: 49 U.S.C. 106(g), 40113, 44701.

§ 39.13 [Amended]

■ 2. The FAA amends § 39.13 by adding the following new airworthiness directive (AD):

2020–05–01 Rolls-Royce Deutschland Ltd & Co KG (Type Certificate Previously Held by Rolls-Royce plc): Amendment 39–21102; Docket No. FAA–2020–0179; Project Identifier MCAI–2019–00125–E.

(a) Effective Date

This AD is effective March 25, 2020.

(b) Affected ADs

None.

(c) Applicability

This AD applies to all Rolls-Royce Deutschland Ltd. & Co KG (RRD) (Type Certificate Previously Held by Rolls-Royce plc) Trent 1000–AE3, Trent 1000–CE3, Trent 1000–D3, Trent 1000–G3, Trent 1000–H3, Trent 1000–J3, Trent 1000–K3, Trent 1000–L3, Trent 1000–M3, Trent 1000–N3, Trent 1000–P3, Trent 1000–Q3, and Trent 1000–R3 model turbofan engines.

(d) Subject

Joint Aircraft System Component (JASC) Code 7250, Turbine Section.

(e) Unsafe Condition

This AD was prompted by the manufacturer identifying that the high-pressure turbine (HPT) blades may fail prematurely. The FAA is issuing this AD to prevent failure of the HPT blades. The unsafe condition, if not addressed, could result in failure of one or more engines, loss of thrust control, and loss of the airplane.

(f) Compliance

Comply with this AD within the compliance times specified, unless already done.

(g) Required Actions

(1) Before exceeding the compliance time specified in Table 1 to paragraph (g)(1) of this AD, and thereafter at intervals not to exceed 50 HPT blade flight cycles (FCs) since the last inspection, perform an on-wing borescope inspection (BSI) of the HPT blades, part number (P/N) KH10575 (pre-mod/SB 72–J550), or P/N KH64485 (post-mod/SB 72–J550), for cracks.

(i) Use Accomplishment Instructions, paragraph 3.C., of RR Alert NMSB Trent 1000 72–AK316, Revision 3, dated July 16, 2019, to perform the BSI.

(ii) [Reserved]

Table 1 to Paragraph (g)(1) – Compliance Times

HPT blade FCs Accumulated (since new or since last in-service HPT blade set replacement)	Compliance Time
Less than 625 HPT blade FCs	Before exceeding 650 HPT blade FCs since new or since last in-service HPT blade set replacement.
625 HPT blade FCs or greater	Within 25 HPT blade FCs after the effective date of this AD.

(2) Within 10 engine FCs after in-flight shutdown (IFSD) of an engine, perform an on-wing BSI of the HPT blades, P/N KH10575 (pre-mod/SB 72–J550), or P/N KH64485 (post-mod/SB 72–J550), for cracks on the not-affected (no IFSD) engine installed on that airplane.

(i) Use Accomplishment Instructions, paragraph 3.C., of RR Alert NMSB Trent 1000 72–AK316, Revision 3, dated July 16, 2019.

(ii) [Reserved]

(3) Remove the full set of HPT blades if any individual HPT blade is found cracked during the on-wing BSI required by paragraph (g)(1) or (2) and replace with a full HPT blade set eligible for installation within the compliance time specified in Table 2 to paragraph (g)(3) of this AD.

Table 2 to Paragraph (g)(3) – Compliance Times

Affected Part Finding(s)	Compliance Time
Cracks exceeding 4 mm (0.16 inch) in length	Before further flight after the effective date of this AD.
Cracks up to and including 4 mm (0.16 inch) in length	Before exceeding 10 HPT blade FCs after the inspection detecting crack(s).

(4) Remove the full set of HPT blades, P/N KH10575 (pre-mod/SB 72–J550), or P/N KH64485 (post-mod/SB 72–J550), after the effective date of this AD, as follows.

(i) Before accumulating 1,000 HPT blade FCs on any engine, or

(ii) Before both engines installed on the airplane accumulate a combined total of 1,400 HPT blade FCs.

(h) Definitions

For the purpose of this AD, ''HPT blade FCs'' are the FCs accumulated by the engine since first flight, or since the last installation of a full set of new HPT blades, whichever occurs later.

(i) Credit for Previous Actions

You may take credit for any initial or repetitive BSI of the HPT blades required by paragraph (g) of this AD if you performed the initial or repetitive BSI before the effective date of this AD using RR Alert NMSB Trent 1000 72–AK316, Revision 2, dated April 30, 2019, or earlier versions.

(j) Alternative Methods of Compliance (AMOCs)

(1) The Manager, ECO Branch, FAA, has the authority to approve AMOCs for this AD, if requested using the procedures found in 14 CFR 39.19. In accordance with 14 CFR 39.19, send your request to your principal inspector or local Flight Standards District Office, as appropriate. If sending information directly to the manager of the certification office, send it to the attention of the person identified in paragraph (k)(1) of this AD. You may email your request to: *ANE-AD-AMOC@faa.gov.*

(2) Before using any approved AMOC, notify your appropriate principal inspector, or lacking a principal inspector, the manager of the local flight standards district office/certificate holding district office.

(k) Related Information

(1) For more information about this AD, contact Stephen Elwin, Aerospace Engineer, ECO Branch, FAA, 1200 District Avenue, Burlington, MA 01803; phone: 781–238–7750; fax: 781–238–7236; email: *stephen.l.elwin@faa.gov.*

(2) Refer to European Union Aviation Safety Agency (EASA) AD 2019–0099R2, dated September 6, 2019, for more information. You may examine the EASA AD in the AD docket on the internet at *https://www.regulations.gov* by searching for and locating it in Docket No. FAA–2020–0179.

(l) Material Incorporated by Reference

(1) The Director of the Federal Register approved the incorporation by reference (IBR) of the service information listed in this paragraph under 5 U.S.C. 552(a) and 1 CFR part 51.

(2) You must use this service information as applicable to do the actions required by this AD, unless the AD specifies otherwise.

(i) Rolls-Royce plc (RR) Alert Non-Modification Service Bulletin Trent 1000 72–AK316, Revision 3, dated July 16, 2019.

(ii) [Reserved]

(3) For RR service information identified in this AD, contact Rolls-Royce Deutschland Ltd & Co KG, Eschenweg 11, 15827 Blankenfelde-Mahlow, Germany; phone: +49 (0) 33 708 6 0; email: *https://www.rolls-royce.com/contact-us.aspx.*

(4) You may view this service information at FAA, Engine and Propeller Standards

Branch, 1200 District Avenue, Burlington, MA 01803. For information on the availability of this material at the FAA, call 781–238–7759.

(5) You may view this service information at the National Archives and Records Administration (NARA). For information on the availability of this material at NARA, email: *fedreg.legal@nara.gov,* or go to: *http://www.archives.gov/federal-register/cfr/ibr-locations.html.*

Issued in Burlington, Massachusetts, on February 24, 2020.

Karen M. Grant,

Acting Manager, Engine and Propeller Standards Branch, Aircraft Certification Service.

[FR Doc. 2020–04808 Filed 3–9–20; 8:45 am]

BILLING CODE 4910–13–P

DEPARTMENT OF TRANSPORTATION

Federal Aviation Administration

14 CFR Part 71

[Docket No. FAA–2018–1028; Airspace Docket No. 17–ASO–6]

RIN 2120–AA66

Amendment of VOR Federal Airway V–18 in the Vicinity of Talladega, AL

AGENCY: Federal Aviation Administration (FAA), DOT.

ACTION: Final rule.

SUMMARY: This action modifies VHF Omnidirectional Range (VOR) Federal airway V–18, in the vicinity of Talladega, AL. This action is necessary due to the planned decommissioning of the Talladega, AL, VOR/DME navigation aid which provides navigation guidance for segments of the route. Additionally, this action removes the compulsory reporting point requirement for the HEFIN, AL, navigation fix.

DATES: Effective date 0901 UTC, May 21, 2020. The Director of the Federal Register approves this incorporation by reference action under Title 1 Code of Federal Regulations part 51, subject to the annual revision of FAA Order 7400.11 and publication of conforming amendments.

ADDRESSES: FAA Order 7400.11D, Airspace Designations and Reporting Points, and subsequent amendments can be viewed online at *https://www.faa.gov/air_traffic/publications/.* For further information, you can contact the Rules and Regulations Group, Federal Aviation Administration, 800 Independence Avenue SW, Washington, DC 20591; telephone: (202) 267–8783. The Order is also available for inspection at the National Archives and Records Administration (NARA). For information on the availability of FAA Order 7400.11D at NARA, email: *fedreg.legal@nara.gov* or go to *https://www.archives.gov/federal-register/cfr/ibr-locations.html.*

FOR FURTHER INFORMATION CONTACT: Paul Gallant, Rules and Regulations Group, Office of Policy, Federal Aviation Administration, 800 Independence Avenue SW, Washington, DC 20591; telephone: (202) 267–8783.

SUPPLEMENTARY INFORMATION:

Authority for This Rulemaking

The FAA's authority to issue rules regarding aviation safety is found in Title 49 of the United States Code. Subtitle I, Section 106 describes the authority of the FAA Administrator. Subtitle VII, Aviation Programs, describes in more detail the scope of the agency's authority. This rulemaking is promulgated under the authority described in Subtitle VII, Part A, Subpart I, Section 40103. Under that section, the FAA is charged with prescribing regulations to assign the use of the airspace necessary to ensure the safety of aircraft and the efficient use of airspace. This regulation is within the scope of that authority as it modifies the National Airspace System as necessary to preserve the safe and efficient flow of air traffic.

History

The FAA published a notice of proposed rulemaking for Docket No. FAA–2018–1028 in the **Federal Register** (83 FR 67165; December 28, 2018), amending VOR Federal airway V–18 due to planned decommissioning of the Talladega, AL, VOR/DME navigation aid. Interested parties were invited to participate in this rulemaking effort by submitting written comments on the proposal. No comments were received.

Differences From the NPRM

Subsequent to the issuance of the above NPRM, in a separate action, the FAA amended V–18 due to the planned decommissioning of the Guthrie, TX, VOR/DME (Docket No. FAA–2018–0769; 84 FR 27937; June 17, 2019). That amendment, became effective on August 15, 2019, removed the segments of V–18 between Guthrie, TX, and the Millsap, TX, VORTAC. Consequently, the V–18 description published in the NPRM on December 28, 2018 differs from the airway description in this rule since the Guthrie to Millsap segment has been removed.

Therefore, this final rule amends V–18, by removing the airway segments between the Vulcan, AL, VORTAC, and the Colliers, SC, VORTAC, due to the planned decommissioning of the Talladega, AL, VOR/DME.

In addition, this rule removes the compulsory reporting point requirement for the HEFIN, AL, navigation fix as published in FAA Order 7400.11D. Pursuant to 14 CFR 71.5, Subpart H of FAA Order 7400.11D lists those geographic locations at which the position of an aircraft must be reported to air traffic control (ATC). The FAA determined that ATC no longer has a compulsory requirement for pilots to report crossing the HEFIN fix and removed the requirement from the National Airspace System database. Therefore, an editorial change is being made to remove the HEFIN fix from the compulsory reporting point list in Subpart H—Reporting Points as published in Order 7400.11D. The HEFIN fix will continue to be depicted on aeronautical charts as a non-compulsory reporting point.

VOR Federal airways are published in paragraph 6010(a); and low altitude reporting points are published in paragraph 7001, respectively, of FAA Order 7400.11D dated August 8, 2019, and effective September 15, 2019, which is incorporated by reference in 14 CFR 71.1. The VOR Federal airway and reporting point listed in this document will be subsequently published in, or removed from, the Order.

FAA Order 7400.11, Airspace Designations and Reporting Points, is published yearly and effective on September 15.

Availability and Summary of Documents for Incorporation by Reference

This document amends FAA Order 7400.11D, Airspace Designations and Reporting Points, dated August 8, 2019, and effective September 15, 2019. FAA Order 7400.11D is publicly available as listed in the **ADDRESSES** section of this document. FAA Order 7400.11D lists Class A, B, C, D, and E airspace areas, air traffic service routes, and reporting points.

The Rule

The FAA is amending Title 14 Code of Federal Regulations (14 CFR) part 71 by amending the description of VOR Federal airway V–18, due to the planned decommissioning of the Talladega, AL, VOR/DME. The airway change is outlined below.

V–18: V–18 currently extends between the Millsap, TX, VORTAC and the Charleston, SC, VORTAC. Due to the planned decommissioning of the Talladega, AL, VOR/DME, the FAA is removing the airway segments between the Vulcan, AL, VORTAC and the

Colliers, SC, VORTAC. This results in a gap in the airway between Vulcan, AL, and Colliers, SC. Therefore, the amended V–18 route consists of two separate sections: First, between the Millsap, TX, VORTAC and the Vulcan, AL, VORTAC; and second, after the gap, the airway resumes between the Colliers, SC, VORTAC, and the Charleston, SC, VORTAC.

Area Navigation (RNAV) route T–294 replaces V–18 between the Vulcan, AL, VORTAC and the HEFIN, AL, navigation fix. Alternative routing between Vulcan, AL, and Colliers, SC is available by continuing on T–294 from the HEFIN, AL, fix to the GRANT, GA, fix, then via V–155 to Colliers, then via V–18 to Charleston, SC.

Additionally, this action removes the compulsory reporting point requirement for the HEFIN, AL, fix as published in FAA Order 7400.11D. The HEFIN fix will continue to be depicted on aeronautical charts as a non-compulsory reporting point.

Regulatory Notices and Analyses

The FAA has determined that this regulation only involves an established body of technical regulations for which frequent and routine amendments are necessary to keep them operationally current. It, therefore: (1) Is not a ''significant regulatory action'' under Executive Order 12866; (2) is not a ''significant rule'' under Department of Transportation (DOT) Regulatory Policies and Procedures (44 FR 11034; February 26, 1979); and (3) does not warrant preparation of a regulatory evaluation as the anticipated impact is so minimal. Since this is a routine matter that only affects air traffic procedures and air navigation, it is certified that this rule, when promulgated, does not have a significant economic impact on a substantial number of small entities under the criteria of the Regulatory Flexibility Act.

Environmental Review

The FAA has determined that this action of modifying VOR Federal airway V–18 between Vulcan, AL, and Colliers, SC, qualifies for categorical exclusion under the National Environmental Policy Act and its implementing regulations at 40 CFR part 1500, and in accordance with FAA Order 1050.1F, Environmental Impacts: Policies and Procedures, paragraph 5–6.5a, which categorically excludes from further environmental impact review rulemaking actions that designate or modify classes of airspace areas, airways, routes, and reporting points (see 14 CFR part 71, Designation of Class A, B, C, D, and E Airspace Areas; Air Traffic Service Routes; and Reporting Points). As such, this action is not expected to result in any potentially significant environmental impacts. In accordance with FAA Order 1050.1F, paragraph 5–2 regarding Extraordinary Circumstances, the FAA has reviewed this action for factors and circumstances in which a normally categorically excluded action may have a significant environmental impact requiring further analysis. The FAA has determined that no extraordinary circumstances exist that warrant preparation of an environmental assessment or environmental impact study.

List of Subjects in 14 CFR Part 71

Airspace, Incorporation by reference, Navigation (air).

Adoption of the Amendment

In consideration of the foregoing, the Federal Aviation Administration amends 14 CFR part 71 as follows:

PART 71—DESIGNATION OF CLASS A, B, C, D, AND E AIRSPACE AREAS; AIR TRAFFIC SERVICE ROUTES; AND REPORTING POINTS

■ 1. The authority citation for part 71 continues to read as follows:

Authority: 49 U.S.C. 106(f), 106(g); 40103, 40113, 40120; E.O. 10854, 24 FR 9565, 3 CFR, 1959–1963 Comp., p. 389.

§ 71.1 [Amended]

■ 2. The incorporation by reference in 14 CFR 71.1 of FAA Order 7400.11D, Airspace Designations and Reporting Points, dated August 8, 2019, and effective September 15, 2019, is amended as follows:

Paragraph 6010(a) Domestic VOR Federal Airways.

* * * * *

V–18 [Amended]

From Millsap, TX; Glen Rose, TX; Cedar Creek, TX; Quitman, TX; Belcher, LA; Monroe, LA; Magnolia, MS; Meridian, MS; Crimson, AL; to Vulcan, AL. From Colliers, SC; to Charleston, SC.

* * * * *

Paragraph 7001 Domestic Low Altitude Reporting Points.

HEFIN [Remove]

* * * * *

Issued in Washington, DC, on February 27, 2020.

Scott M. Rosenbloom,

Acting Manager, Rules and Regulations Group.

[FR Doc. 2020–04421 Filed 3–9–20; 8:45 am]

BILLING CODE 4910–13–P

DEPARTMENT OF TRANSPORTATION

Federal Aviation Administration

14 CFR Part 71

[Docket No. FAA–2019–0339; Airspace Docket No. 18–AEA–21]

RIN 2120–AA66

Establishment of Area Navigation (RNAV) Routes; Northeastern United States

AGENCY: Federal Aviation Administration (FAA), DOT.

ACTION: Final rule.

SUMMARY: This action establishes two new low altitude RNAV routes, designated T–356, and T–358, in the northeastern United States. The new routes enhance the efficiency of the National Airspace System (NAS) by expanding the availability of RNAV routing and supporting the transition of the NAS from ground-based to satellite-based navigation. Originally, this docket action also proposed to establish routes T–303, T–307, T–320, T–324, and T–335. However, subsequent to the NPRM, the FAA determined that those routes require further development, so they will be addressed in separate docket actions at a later date.

DATES: Effective date 0901 UTC, May 21, 2020. The Director of the Federal Register approves this incorporation by reference action under Title 1 Code of Federal Regulations part 51, subject to the annual revision of FAA Order 7400.11 and publication of conforming amendments.

ADDRESSES: FAA Order 7400.11D, Airspace Designations and Reporting Points, and subsequent amendments can be viewed online at *https://www.faa.gov/air_traffic/publications/*. For further information, you can contact the Rules and Regulations Group, Federal Aviation Administration, 800 Independence Avenue SW, Washington, DC 20591; telephone: (202) 267–8783. The Order is also available for inspection at the National Archives and Records Administration (NARA). For information on the availability of FAA Order 7400.11D at NARA, email: *fedreg.legal@nara.gov* or go to *https://www.archives.gov/federal-register/cfr/ibr-locations.html.*

FOR FURTHER INFORMATION CONTACT: Paul Gallant, Rules and Regulations Group, Office of Policy, Federal Aviation Administration, 800 Independence Avenue SW, Washington, DC 20591; telephone: (202) 267–8783.

SUPPLEMENTARY INFORMATION:

Authority for This Rulemaking

The FAA's authority to issue rules regarding aviation safety is found in Title 49 of the United States Code. Subtitle I, Section 106 describes the authority of the FAA Administrator. Subtitle VII, Aviation Programs, describes in more detail the scope of the agency's authority. This rulemaking is promulgated under the authority described in Subtitle VII, Part A, Subpart I, Section 40103. Under that section, the FAA is charged with prescribing regulations to assign the use of the airspace necessary to ensure the safety of aircraft and the efficient use of airspace. This regulation is within the scope of that authority as it modifies the route structure in the National Airspace System as necessary to preserve the safe and efficient flow of air traffic.

History

The FAA published a notice of proposed rulemaking for Docket No. FAA–2019–0339 in the **Federal Register** (84 FR 24403; May 28, 2019) establishing seven new low altitude RNAV routes, designated T–303, T–307, T–320, T–324, T–335, T–356, and T–358, in the northeastern United States. Interested parties were invited to participate in this rulemaking effort by submitting written comments on the proposal. No comments were received.

Difference From the NPRM

The above NPRM proposed to establish seven RNAV routes. Subsequent to the issuance of the NPRM, the FAA determined that further development work was needed for routes T–303, T–307, T–320, T–324, and T–335. Consequently, the FAA is removing T–303, T–307, T–320, T–324, and T–335 from this docket action. These routes will be addressed in separate docket actions at a later date. The FAA also determined that establishing routes T–356 and T–358 is essential to enhancing the management of air traffic operations in the vicinity of Baltimore/Washington International Thurgood Marshall Airport (KBWI). Therefore, this rule establishes routes T–356 and T–358 as proposed in the NPRM.

Low altitude RNAV T-routes are published in paragraph 6011 of FAA Order 7400.11D dated August 8, 2019, and effective September 15, 2019, which is incorporated by reference in 14 CFR 71.1. The T-routes listed in this document will be subsequently published in the Order.

FAA Order 7400.11, Airspace Designations and Reporting Points, is published yearly and effective on September 15.

Availability and Summary of Documents for Incorporation by Reference

This document amends FAA Order 7400.11D, Airspace Designations and Reporting Points, dated August 8, 2019, and effective September 15, 2019. FAA Order 7400.11D is publicly available as listed in the **ADDRESSES** section of this document. FAA Order 7400.11D lists Class A, B, C, D, and E airspace areas, air traffic service routes, and reporting points.

The Rule

The FAA is amending Title 14 Code of Federal Regulations (14 CFR) part 71 by establishing two new low altitude RNAV routes, designated T–356 and T–358, in the northeastern United States. The routes will expand the availability of RNAV and improve the efficiency of the NAS by reducing the dependency on ground-based navigation systems. The following is a general description of the proposed routes.

T–356: T–356 extends between the WOOLY, MD, fix (38 NM east of the Martinsburg, WV, (MRB) VORTAC) eastward to the SWANN, MD, fix; then northeastward to the ELUDE, MD, fix (9 NM west of the Dupont, DE, (DQO) VORTAC). T–356 replaces VOR Federal airway V–214 between the WOOLY, MD, fix and the ODESA, MD, fix.

T–358: T–358 extends between the Martinsburg, WV, (MRB) VORTAC, and the AVALO, NJ, fix (10 NM south of the Atlantic City, NJ, (ACY) VORTAC). T–358 overlies VOR Federal airway V–268 between the SWANN, MD, fix, and the AVALO, NJ, fix.

Full descriptions of the above routes are listed in ''The Amendment'' section, below.

Regulatory Notices and Analyses

The FAA has determined that this regulation only involves an established body of technical regulations for which frequent and routine amendments are necessary to keep them operationally current. It, therefore: (1) Is not a ''significant regulatory action'' under Executive Order 12866; (2) is not a ''significant rule'' under Department of Transportation (DOT) Regulatory Policies and Procedures (44 FR 11034; February 26, 1979); and (3) does not warrant preparation of a regulatory evaluation as the anticipated impact is so minimal. Since this is a routine matter that only affects air traffic procedures and air navigation, it is certified that this rule, when promulgated, does not have a significant economic impact on a substantial number of small entities under the criteria of the Regulatory Flexibility Act.

Environmental Review

The FAA has determined that this action establishing RNAV routes T–356 and T–358, in the northeastern United States, qualifies for categorical exclusion under the National Environmental Policy Act and its implementing regulations at 40 CFR part 1500, and in accordance with FAA Order 1050.1F, Environmental Impacts: Policies and Procedures. The applicable categorical exclusion in FAA Order 1050.1F is paragraph § 5–6.5(a): Rulemaking actions that designate or modify classes of airspace areas, airways, routes, and reporting points (see 14 CFR part 71, Designation of Class A, B, C, D, and E Airspace Areas; Air Traffic Service Routes; and Reporting Points). This action is not expected to cause any potentially significant environmental impacts. In accordance with FAA Order 1050.1F, paragraph 5–2 regarding Extraordinary Circumstances, the FAA has reviewed this action for factors and circumstances in which a normally categorically excluded action may have a significant environmental impact requiring further analysis. The FAA has determined no extraordinary circumstances exist that warrant preparation of an environmental assessment or environmental impact study.

List of Subjects in 14 CFR Part 71

Airspace, Incorporation by reference, Navigation (air).

The Amendment

In consideration of the foregoing, the Federal Aviation Administration amends 14 CFR part 71 as follows:

PART 71—DESIGNATION OF CLASS A, B, C, D, AND E AIRSPACE AREAS; AIR TRAFFIC SERVICE ROUTES; AND REPORTING POINTS

■ 1. The authority citation for part 71 continues to read as follows:

Authority: 49 U.S.C. 106(f), 106(g); 40103, 40113, 40120; E.O. 10854, 24 FR 9565, 3 CFR, 1959–1963 Comp., p. 389.

§ 71.1 [Amended]

■ 2. The incorporation by reference in 14 CFR 71.1 of FAA Order 7400.11D, Airspace Designations and Reporting Points, dated August 8, 2019, and

effective September 15, 2019, is amended as follows:

Paragraph 6011 United States Area Navigation Routes.

* * * * *

T–356 WOOLY, MD to ELUDE, MD [New]		
Wooly, MD	Fix	(Lat. 39°20′19.18″ N, long. 077°02′11.17″ W)
Drosa, MD	WP	(Lat. 39°18′30.32″ N, long. 076°58′06.22″ W)
Obwon, MD	WP	(Lat. 39°11′54.69″ N, long. 076°32′04.84″ W)
Swann, MD	Fix	(Lat. 39°09′05.28″ N, long. 076°13′43.94″ W)
Gatby, MD	Fix	(Lat. 39°15′40.02″ N, long. 076°06′01.84″ W)
Kerno, MD	Fix	(Lat. 39°18′36.25″ N, long. 076°02′34.92″ W)
Odesa, MD	Fix	(Lat. 39°29′29.00″ N, long. 075°49′44.37″ W)
Elude, MD	Fix	(Lat. 39°39′11.28″ N, long. 075°48′08.43″ W)
T–358 Martinsburg, WV (MRB) to AVALO, NJ [New]		
Martinsburg, WV (MRB)	VORTAC	(Lat. 39°23′08.06″ N, long. 077°50′54.08″ W)
Cptal, MD	WP	(Lat. 39°32′16.02″ N, long. 077°41′55.65″ W)
Hogzz, MD	WP	(Lat. 39°34′36.70″ N, long. 077°12′44.75″ W)
Moyrr, MD	WP	(Lat. 39°30′03.42″ N, long. 076°56′10.84″ W)
Danii, MD	WP	(Lat. 39°17′46.42″ N, long. 076°42′19.36″ W)
Obwon, MD	WP	(Lat. 39°11′54.69″ N, long. 076°32′04.84″ W)
Swann, MD	Fix	(Lat. 39°09′05.28″ N, long. 076°13′43.94″ W)
Golda, MD	Fix	(Lat. 39°10′20.27″ N, long. 076°02′51.07″ W)
Bross, MD	Fix	(Lat. 39°11′28.40″ N, long. 075°52′49.88″ W)
Smyrna, DE (ENO)	VORTAC	(Lat. 39°13′53.93″ N, long. 075°30′57.49″ W)
Leeah, NJ	Fix	(Lat. 39°15′39.27″ N, long. 074°57′11.01″ W)
Avalo, NJ	Fix	(Lat. 39°16′54.52″ N, long. 074°30′50.75″ W)

* * * * *

Issued in Washington, DC, on March 4, 2020.

Scott M. Rosenbloom,

Acting Manager, Rules and Regulations Group.

[FR Doc. 2020–04770 Filed 3–9–20; 8:45 am]

BILLING CODE 4910–13–P

SECURITIES AND EXCHANGE COMMISSION

17 CFR Part 275

[Release No. IA–5454]

RIN 3235–AM68

Exemptions From Investment Adviser Registration for Advisers to Certain Rural Business Investment Companies

AGENCY: Securities and Exchange Commission.

ACTION: Final rule.

SUMMARY: We are amending the definition of the term ''venture capital fund'' and the private fund adviser exemption under the Investment Advisers Act of 1940 (the ''Advisers Act'') to reflect in our rules exemptions from registration for investment advisers who advise rural business investment companies (''RBICs''). These exemptions were enacted as part of the RBIC Advisers Relief Act of 2018 (the ''RBIC Advisers Relief Act''), which amended Advisers Act sections 203(*l*) and 203(m), among other provisions. Specifically, the RBIC Advisers Relief Act amended Advisers Act section 203(*l*), which exempts from investment adviser registration any adviser who solely advises venture capital funds, by stating that RBICs are venture capital funds for purposes of the exemption. Accordingly, we are amending the definition of the term ''venture capital fund'' to include RBICs. The RBIC Advisers Relief Act also amended Advisers Act section 203(m), which exempts from investment adviser registration any adviser who solely advises private funds and has assets under management in the United States of less than $150 million, by excluding RBIC assets from counting towards the $150 million threshold. Accordingly, we are amending the definition of the term ''assets under management'' in the private fund adviser exemption to exclude the assets of RBICs.

DATES: *Effective date:* March 10, 2020.

FOR FURTHER INFORMATION CONTACT: Alexis Palascak, Senior Counsel, or Jennifer Songer, Branch Chief, Investment Adviser Regulation Office at (202) 551–6787 or *IArules@sec.gov;* Securities and Exchange Commission, 100 F Street NE, Washington, DC 20549.

SUPPLEMENTARY INFORMATION: The Commission is adopting amendments to 17 CFR 275.203(l)–1 [rule 203(l)–1] and 17 CFR 275.203(m)–1 [rule 203(m)–1] under the Investment Advisers Act of 1940 [15 U.S.C. 80b].[1]

Table of Contents

I. Background
II. Discussion
A. The Venture Capital Fund Adviser Exemption and Amendments to Advisers Act Rule 203(l)–1
B. The Private Fund Adviser Exemption and Amendments to Advisers Act Rule 203(m)–1
III. Procedural Matters
IV. Economic Analysis
A. Introduction
B. Costs and Benefits
C. Efficiency, Competition, and Capital Formation
V. Paperwork Reduction Act Analysis
VI. Statutory Authority
Text of the Rule Amendments

I. Background

The RBIC Advisers Relief Act of 2018 (the ''RBIC Advisers Relief Act'')[2] amended the Investment Advisers Act of 1940 (the ''Advisers Act'') to provide one new and two expanded exemptions from registration for investment advisers who advise rural business investment

[1] Unless otherwise noted, when we refer to the Advisers Act, or any paragraph of the Advisers Act, we are referring to 15 U.S.C. 80b of the United States Code [15 U.S.C. 80b], at which the Advisers Act is codified, and when we refer to Advisers Act rules, or any paragraph of these rules, we are referring to title 17, part 275 of the Code of Federal Regulations [17 CFR part 275], in which these rules are published.

[2] Public Law 115–417, 132 Stat. 5438 (Jan. 3, 2019).

companies (''RBICs'').[3] The RBIC Advisers Relief Act added section 203(b)(8) to the Advisers Act (the ''RBIC adviser exemption''). The RBIC adviser exemption exempts from registration any investment adviser who solely advises RBICs. An investment adviser who relies on the RBIC adviser exemption is not subject to reporting or recordkeeping provisions under the Advisers Act and is not subject to examination by our staff.[4] The RBIC Advisers Relief Act also added section 203A(b)(1)(D) to the Advisers Act, which provides that no law of any state or political subdivision thereof requiring the registration, licensing, or qualification as an investment adviser or supervised person of an investment adviser shall apply to any person that is not registered under Advisers Act section 203 because that person is exempt from registration under the RBIC adviser exemption, or is a supervised person of such person.[5]

In addition, the RBIC Advisers Relief Act expanded the applicability of two additional exemptions from investment adviser registration for investment advisers to RBICs when the adviser cannot rely on the RBIC adviser exemption: The exemption for any adviser who solely advises one or more venture capital funds in Advisers Act section 203(*l*)[6] (the ''venture capital fund adviser exemption''), and (2) the exemption for any adviser who solely advises private funds and has assets under management in the United States of less than $150 million in Advisers Act section 203(m)[7] (the ''private fund adviser exemption''). Specifically, the RBIC Advisers Relief Act amended the venture capital fund adviser exemption by stating that RBICs are venture capital funds for purposes of the exemption. It also amended the private fund adviser exemption by excluding RBIC assets from counting towards the $150 million threshold. An investment adviser who relies on the venture capital fund adviser exemption or the private fund adviser exemption is considered an ''exempt reporting adviser'' and must maintain such records and submit such reports as the Commission determines to be necessary or appropriate in the public interest or for the protection of investors.[8] Exempt reporting advisers are required to file with the Commission certain information required by Form ADV[9] but are not subject to many of the other substantive requirements to which registered investment advisers are subject.[10] Additionally, an investment adviser who relies on the venture capital fund adviser exemption or the private fund adviser exemption must evaluate the need for state registration.[11]

We are amending our rules to reflect the RBIC Advisers Relief Act amendments to the Advisers Act. Specifically, we are amending the definition of the term ''venture capital fund'' in Advisers Act rule 203(l)–1 to include RBICs. We also are amending the definition of the term ''assets under management'' in Advisers Act rule 203(m)–1 to exclude RBIC assets from counting towards the $150 million threshold.

II. Discussion

A. The Venture Capital Fund Adviser Exemption and Amendments to Advisers Act Rule 203(l)–1

As noted above, the venture capital fund adviser exemption in Advisers Act section 203(*l*) provides an exemption from registration under the Advisers Act for investment advisers who solely advise venture capital funds.[12] The RBIC Advisers Relief Act amended Advisers Act section 203(*l*) by stating that RBICs are venture capital funds for

[3] An RBIC is (other than an entity that has elected to be regulated or is regulated as a business development company pursuant to section 54 of the Investment Company Act of 1940 (''Investment Company Act'')); (1) a rural business investment company (as defined in section 384A of the Consolidated Farm and Rural Development Act (the ''CFRD'')); or (2) a company that has submitted to the Secretary of Agriculture an application in accordance with section 384D(b) of the CFRD that either (i) has received from the Secretary of Agriculture a letter of conditions, which has not been revoked; or (ii) is affiliated with one or more rural business investment companies (as defined in section 384A of the CFRD). *See* 15 U.S.C. 80a–53, 7 U.S.C. 2009cc, 7 U.S.C. 2009cc–3(b). This definition is consistent with the definition of RBIC used in sections 203(*l*) and 203(m) of the Advisers Act discussed below, and we have used this term for purposes of this release. We note that RBIC is also defined in Advisers Act section 203(b)(8) as (1) a rural business investment company (as defined in section 384A of the CFRD); or (2) a company that has submitted to the Secretary of Agriculture an application in accordance with section 384D(b) of the CFRD that either (i) has received from the Secretary of Agriculture a letter of conditions, which has not been revoked; or (ii) is affiliated with one or more rural business investment companies (as defined in section 384A of the CFRD).

[4] Under Advisers Act section 204(a), the Commission has the authority to require an investment adviser to maintain records and provide reports, as well as the authority to examine such adviser's records, unless the adviser is specifically exempted from the requirement to register pursuant to Advisers Act section 203(b), which includes Advisers Act section 203(b)(8) (the RBIC adviser exemption). 15 U.S.C. 80b–4(a), 15 U.S.C. 80b–3(b).

[5] 15 U.S.C. 80b–3a(b)(1)(D). *See infra* footnote 11.

[6] 15 U.S.C. 80b–3(*l*).

[7] 15 U.S.C. 80b–3(m).

[8] Investment advisers who are exempt from registration in reliance on Advisers Act section 203(*l*) (the venture capital fund adviser exemption) or Advisers Act section 203(m) (the private fund adviser exemption) are not specifically exempted from the requirement to register pursuant to Advisers Act section 203(b), and the Commission has authority under Advisers Act section 204(a) to require those advisers to maintain records and provide reports, as well as the authority to examine such advisers' records. In this release, we refer to advisers who rely on the venture capital fund adviser exemption and the private fund adviser exemption as ''exempt reporting advisers.'' The Advisers Act rule in 17 CFR 275.204–4 [rule 204–4] sets forth reporting requirements for exempt reporting advisers. *See* 17 CFR 275.204–4.

[9] Exempt reporting advisers must complete a subset of items and schedules on Form ADV. However, exempt reporting advisers who are also registering with a state authority must complete all of Form ADV. *See* Form ADV, General Instruction 3 (How is Form ADV organized?), available at *https://www.sec.gov/about/forms/formadv-instructions.pdf.*

[10] For example, registered investment advisers are required to comply with the Advisers Act rule in 17 CFR 275.204–2 [rule 204–2] (books and records to be maintained by investment advisers), Advisers Act rule in 17 CFR 275.204–3 [rule 204–3] (delivery of brochures and brochure supplements), Advisers Act rule in 17 CFR 275.204(b)–1 [rule 204(b)–1] (reporting by investment advisers to private funds), Advisers Act rule in 17 CFR 275.204A–1 [rule 204A–1] (investment adviser codes of ethics), Advisers Act rule in 17 CFR 275.206(4)–1 [rule 206(4)–1] (advertisements by investment advisers), Advisers Act rule in 17 CFR 275.206(4)–2 [rule 206(4)–2] (custody of funds or securities of clients by investment advisers), Advisers Act rule in 17 CFR 275.206(4)–3 [rule 206(4)–3] (cash payments for client solicitations), Advisers Act rule in 17 CFR 275.206(4)–6 [rule 206(4)–6] (proxy voting), and Advisers Act rule in 17 CFR 275.206(4)–7 [rule 206(4)–7] (compliance procedures and practices).

[11] Advisers Act section 203A(b)(1) does not specifically exempt from state regulatory requirements advisers relying on the venture capital fund adviser exemption or the private fund adviser exemption. Advisers Act section 222 provides that a state cannot require registration, licensing, or qualification as an investment adviser if the investment adviser (1) does not have a place of business located within the state and (2) during the preceding 12-month period, has had fewer than six clients who are residents of that state. Form ADV, General Instruction 14 provides instructions for exempt reporting advisers who may be required to register with or submit reports to state securities authorities. 15 U.S.C. 80b–3a(b)(1), 15 U.S.C. 80b–18a, Form ADV: General Instruction 14 (I am an exempt reporting adviser. Is it possible that I might be required to also register with or submit a report to a state securities authority?) (emphasis omitted), available at *https://www.sec.gov/about/forms/formadv-instructions.pdf.* Exempt reporting advisers must complete all of Form ADV if they are also registering with a state securities authority. *See id.*

[12] An adviser may not advise venture capital funds with more than $150 million in assets under management in reliance on the venture capital fund adviser exemption and also advise other types of private funds with less than $150 million in assets under management in reliance on the private fund adviser exemption. Depending on the facts and circumstances, we may view two or more separately formed advisory entities, each of which purports to rely on a separate exemption from registration, as a single adviser for purposes of assessing the availability of exemptions from registration. *See* Exemptions for Advisers to Venture Capital Funds, Private Fund Advisers with Less Than $150 Million in Assets Under Management, and Foreign Private Advisers, Investment Advisers Act Release No. 3222 (June 22, 2011) [76 FR 39646 (July 6, 2011)] at n.314 and accompanying text, n.506 and accompanying text. *See also,* Advisers Act section 208(d), which prohibits a person from doing indirectly, or through or by another person, any act or thing which it would be unlawful for such person to do directly. 15 U.S.C. 80b–8.

purposes of the venture capital fund adviser exemption.

To make our rules consistent with amended Advisers Act section 203(*l*), we are amending Advisers Act rule 203(l)–1, which defines the term ''venture capital fund'' for purposes of the venture capital fund adviser exemption.[13] Specifically, we are amending Advisers Act rule 203(l)–1 to provide that the term ''venture capital fund'' includes RBICs.[14] This amendment is designed to reflect that an investment adviser who relies on the venture capital fund adviser exemption may advise solely venture capital funds, including RBICs.

An adviser to RBICs who relies on the venture capital fund adviser exemption will be required to submit Form ADV reports to the Commission as an exempt reporting adviser, consistent with the current requirements for advisers relying on the venture capital fund adviser exemption.[15] Furthermore, an adviser to RBICs who relies on the venture capital fund adviser exemption will be required to report on Form ADV certain information about the private funds it advises, consistent with the current requirements for exempt reporting advisers.[16]

B. The Private Fund Adviser Exemption and Amendments to Advisers Act Rule 203(m)–1

The private fund adviser exemption in Advisers Act section 203(m) directs the Commission to provide an exemption from registration to any investment adviser who solely advises private funds and has assets under management in the United States of less than $150 million.[17] The RBIC Advisers Relief Act amended Advisers Act section 203(m) by excluding RBIC assets from counting towards the $150 million threshold.

To make our rules consistent with amended Advisers Act section 203(m), we are amending Advisers Act rule 203(m)–1(d)(1), which defines the term ''assets under management'' for purposes of the private fund adviser exemption.[18] Specifically, we are amending Advisers Act rule 203(m)–1(d)(1) [19] to provide that the term ''assets under management'' excludes the regulatory assets under management attributable to a private fund that is an RBIC.[20] This amendment is designed to reflect that an investment adviser can rely on the private fund adviser exemption without counting the assets of its private funds that are RBICs towards the $150 million threshold.

An adviser to RBICs who relies on the private fund adviser exemption will be required to submit Form ADV reports to the Commission as an exempt reporting adviser, consistent with the current requirements for advisers relying on the private fund adviser exemption.[21] Furthermore, an adviser to RBICs who relies on the private fund adviser exemption will be required to report on Form ADV certain information about the RBICs that it advises, consistent with the current requirements for exempt reporting advisers.[22]

III. Procedural Matters

The Administrative Procedure Act (''APA'') generally requires an agency to publish notice of a proposed rulemaking in the **Federal Register** and provide an opportunity for public comment.[23] This requirement does not apply, however, if the agency, for good cause, finds that the notice and public comment are impracticable, unnecessary, or contrary to the public interest.[24] There is good cause for the Commission to find that notice and public comment are unnecessary because this rulemaking involves a minimal exercise of discretion.[25] We are merely amending our rules to reflect the RBIC Advisers Relief Act amendments to the Advisers Act.

The APA generally requires publication of a rule at least 30 days before its effective date.[26] This requirement does not apply, however, if the agency finds good cause for making the rule effective sooner.[27] For the same reasons as we are forgoing notice and comment, we find good cause to make the rules effective upon publication in the **Federal Register**.

[13] Advisers Act rule 203(l)–1 currently defines the term ''venture capital fund'' as any SBIC (defined below) or any private fund that (1) represents to investors and potential investors that it pursues a venture capital strategy; (2) immediately after the acquisition of any asset, other than qualifying investments or short-term holdings, holds no more than 20 percent of the amount of the fund's aggregate capital contributions and uncalled committed capital in assets (other than short-term holdings) that are not qualifying investments, valued at cost or fair value, consistently applied by the fund; (3) does not borrow, issue debt obligations, provide guarantees or otherwise incur leverage, in excess of 15 percent of the private fund's aggregate capital contributions and uncalled committed capital, and any such borrowing, indebtedness, guarantee or leverage is for a non-renewable term of no longer than 120 calendar days, except that any guarantee by the private fund of a qualifying portfolio company's obligations up to the amount of the value of the private fund's investment in the qualifying portfolio company is not subject to the 120 calendar day limit; (4) only issues securities the terms of which do not provide a holder with any right, except in extraordinary circumstances, to withdraw, redeem or require the repurchase of such securities but may entitle holders to receive distributions made to all holders pro rata; and (5) is not registered under section 8 of the Investment Company Act, and has not elected to be treated as a business development company pursuant to section 54 of the Investment Company Act. 15 U.S.C. 80a–8. An SBIC is (other than an entity that has elected to be regulated or is regulated as a business development company pursuant to section 54 of the Investment Company Act) (1) a small business investment company that is licensed under the Small Business Investment Act of 1958 (the ''SBIA''); (2) an entity that has received from the Small Business Administration notice to proceed to qualify for a license as a small business investment company under the SBIA, which notice or license has not been revoked; or (3) an applicant that is affiliated with one or more small business investment companies that are licensed under the SBIA and that has applied for another license under the SBIA, which application remains pending. *See* 15 U.S.C. 80b–3(b)(7).

[14] Amended Advisers Act rule 203(l)–1(a).

[15] *See* 15 U.S.C. 80b–3(*l*)(1) and *supra* footnote 8.

[16] Form ADV requires exempt reporting advisers to disclose information about the private funds they advise.

[17] Depending on the facts and circumstances, we may view two or more separately formed advisory entities, each of which purports to rely on a separate exemption from registration, as a single adviser for purposes of assessing the availability of exemptions from registration. *See supra* footnote 12.

[18] Advisers Act rule 203(m)–1(d)(1) currently defines the term ''assets under management'' as the regulatory assets under management as determined under Form ADV, Part 1A, Item 5.F (Regulatory Assets Under Management) except that the regulatory assets under management attributable to a private fund that is an SBIC shall be excluded from the definition of assets under management for purposes of the private fund adviser exemption. 17 CFR 275.203(m)–1(d)(1), Form ADV, Part 1A, Item 5.F (Regulatory Assets Under Management), available at *https://www.sec.gov/about/forms/formadv-part1a.pdf.*

[19] Amended Advisers Act rule 203(m)–1(d)(1).

[20] The Commission is adding subordinate paragraphs to Advisers Act rule 203(m)–1(d)(1) so that Advisers Act rule 203(m)–1(d)(1)(i) will concern the exclusion of regulatory assets under management attributable to a private fund that is an SBIC and Advisers Act rule 203(m)–1(d)(1)(ii) will concern the exclusion of regulatory assets under management attributable to a private fund that is an RBIC. The subordinate paragraphs are designed to make Advisers Act rule 203(m)–1(d)(1) easier to read than if it were presented without subordinate paragraphs.

[21] *See* 15 U.S.C. 80b–3(m)(2) and *supra* footnote 8.

[22] Form ADV requires exempt reporting advisers to disclose information about the private funds they advise. For an adviser to rely on the private fund adviser exemption, any RBIC that it advises must be a private fund and, therefore, must be disclosed on Form ADV.

[23] *See* 5 U.S.C. 553.

[24] *See* 5 U.S.C. 553(b).

[25] This finding also satisfies the requirements of 5 U.S.C. 808(2), allowing the rule amendments to become effective notwithstanding the requirement of 5 U.S.C. 801 (if a federal agency finds that notice and public comment are impractical, unnecessary, or contrary to the public interest, a rule shall take effect at such time as the federal agency promulgating the rule determines). The amendments also do not require analysis under the Regulatory Flexibility Act. *See* 5 U.S.C. 604(a) (requiring a final regulatory flexibility analysis only for rules required by the APA or other law to undergo notice and comment).

[26] *See* 5 U.S.C. 553(d).

[27] *Id.*

IV. Economic Analysis

A. Introduction

The Commission is sensitive to the potential economic effects of the amendments to Advisers Act rules 203(l)–1 and 203(m)–1. These effects include costs and benefits to investment advisers, their funds, and the investors in their funds as well as the amendments' implications for efficiency, competition, and capital formation. The economic effects of the amendments are discussed below.

We are amending Advisers Act rules 203(l)–1 and 203(m)–1 to reflect in our rules the RBIC Advisers Relief Act amendments to the Advisers Act. Although the RBIC Advisers Relief Act does not expressly require the Commission to amend the Advisers Act rules, the amendments are designed to eliminate any confusion that might otherwise exist if Advisers Act rules 203(l)–1 and 203(m)–1 were not amended. We are amending the definition of the term ''venture capital fund'' in Advisers Act rule 203(l)–1 to include RBICs. We also are amending the definition of the term ''assets under management'' in Advisers Act rule 203(m)–1 to exclude RBIC assets from counting towards the $150 million threshold.

Economic Baseline

To establish a baseline useful for evaluating the economic effects of the amendments, we briefly describe the nature of RBICs and then define the different classes of advisers that could be affected by the amendments.

RBICs are investment funds that make equity investments mostly in smaller enterprises located primarily in rural areas.[28] The United States Department of Agriculture (''USDA'') licenses RBICs to promote economic development and the creation of wealth and job opportunities in rural areas and among individuals living in those communities.[29]

Advisers to RBICs may also advise funds that are not RBICs. Prior to enactment of the RBIC Advisers Relief Act, advisers to RBICs belonged to one of three classes, depending on the amount of assets and types of funds they advised: (1) Registered investment advisers solely to RBICs; (2) registered investment advisers to RBICs and non-RBICs; or (3) exempt reporting advisers. Advisers to RBICs could have been exempt reporting advisers by relying on the venture capital fund adviser exemption or the private fund adviser exemption, if they met applicable requirements.

Before the RBIC Advisers Relief Act amended the Advisers Act, RBICs were not included in the definition of the term ''venture capital fund;'' therefore, for an adviser to qualify for the venture capital fund adviser exemption, any RBICs that it advised would have had to meet the current definition of the term ''venture capital fund.''[30] An adviser could qualify for the private fund adviser exemption if it advised solely private funds and had assets under management in the United States, including assets of the private funds that were RBICs, of less than $150 million.[31] As discussed in Section I above, an adviser who relies on the venture capital fund adviser exemption or the private fund adviser exemption is considered an ''exempt reporting adviser'' and must maintain such records and submit such reports as the Commission determines to be necessary or appropriate in the public interest or for the protection of investors.[32] Exempt reporting advisers are required to file with the Commission certain information required by Form ADV but are not subject to many of the other substantive requirements to which registered investment advisers are subject.[33] In contrast, registered investment advisers are required to file Form ADV and are subject to other substantive requirements, including the establishment of a compliance program and a Code of Ethics.[34]

In addition to the three classes of advisers who advised RBICs as discussed above, two additional classes of advisers that did not advise RBICs are also relevant: (1) Advisers solely to venture capital funds that qualify for the venture capital fund adviser exemption from registration and are considered exempt reporting advisers; and (2) advisers solely to non-RBIC private funds with less than $150 million in assets under management in the United States that qualify for the private fund adviser exemption from registration and are considered exempt reporting advisers. Before the RBIC Advisers Relief Act amended the Advisers Act, advisers relying on the venture capital fund adviser exemption were required to register with the Commission if they added RBIC clients that did not meet the current definition of the term ''venture capital fund.''[35] In addition, before the RBIC Advisers Relief Act amended the Advisers Act, advisers relying on the private fund adviser exemption were required to register with the Commission if they added RBIC clients that caused their total assets under management in the United States to equal or exceed $150 million.

As of August 2019, after the enactment of the RBIC Advisers Relief Act, there were approximately 13,428 registered investment advisers reporting a total of approximately $84 trillion in regulatory assets under management.[36] In addition, there were 4,166 exempt reporting advisers,[37] of whom 1,256 relied on the venture capital fund adviser exemption,[38] 3,318 relied on the private fund adviser exemption,[39] and 431 qualified for both exemptions.[40] For exempt reporting advisers that relied on the private fund adviser exemption, total private fund assets under management were approximately $3 trillion.[41] Registered investment advisers advised approximately 37,004 private funds, while exempt reporting advisers advised approximately 17,643 private funds.[42] As of August 2019, there were 5 RBICs who were licensed by the USDA managing approximately $352 million in assets.[43] We are unable to identify which of those RBICs are managed by advisers solely to RBICs compared to advisers that also advise other types of funds because filers of Form ADV are not required to explicitly indicate whether they advise RBICs. Because filers of Form ADV are not required to explicitly indicate whether

[28] *See supra* footnote 3 and *Rural Business Investment Program,* USDA (May 2016), available at *https://www.rd.usda.gov/files/fact-sheet/RD-Factsheet-RBS-RBusInvestmentProgram.pdf.*

[29] *See* 7 CFR 4290.10.

[30] *See* 17 CFR 275.203(l)–1 and *supra* footnote 13.

[31] As discussed above, however, the assets of SBICs are excluded for purposes of calculating private fund assets towards the $150 million threshold under Advisers Act rule 203(m)–1. *See supra* Section II.B.

[32] *See supra* footnote 8.

[33] *See supra* footnotes 9 and 10.

[34] *See supra* footnote 10.

[35] *See* 17 CFR 275.203(l)–1 and *supra* footnote 13.

[36] Form ADV, Part 1A, Item 2.A, Item 5.F.(2)(c).

[37] Form ADV, Part 1A, Item 2.B.

[38] Form ADV, Part 1A, Item 2.B.(1).

[39] Form ADV, Part 1A, Item 2.B.(2).

[40] Form ADV, Part 1A, Item 2.B.(1), Item 2.B.(2). Eighty-two advisers indicated in Form ADV, Part 1A, Item 2.B.(3) that they act solely as an adviser to private funds, but have assets under management in the United States of $150 million or more. The subparts of Form ADV Item 2.B are not mutually exclusive to each other; therefore, adding up the responses to the subparts of Form ADV Item 2.B would not reliably result in the total number of exempt reporting advisers.

[41] Form ADV, Schedule D, Section 7.B.(1)(A)(11).

[42] Form ADV, Schedule D, Section 7.B.(1). A private fund is counted for both a registered investment adviser and exempt reporting adviser if advised by both types of advisers. To avoid double-counting, feeder funds whose master fund is also reported on Form ADV, Schedule D, Section 7.B.(1) are removed.

[43] Rural Business Investment Company Applications filed with the USDA. To contact the USDA for data about Rural Business Investment Company Applications filed with the USDA *see https://www.rd.usda.gov/programs-services/rural-business-investment-program.*

they advise RBICs, we are not able to estimate the number of advisers that have already taken advantage of the exemptions afforded to them by the RBIC Advisers Relief Act's amendments to the Advisers Act, as compared to the number of advisers who have not done so due to any inconsistencies between the Advisers Act rules and the Advisers Act as amended by the RBIC Advisers Relief Act.

By amending sections 203 and 203A of the Advisers Act, the RBIC Advisers Relief Act provided the five classes of advisers discussed above with additional flexibility:

- Registered investment advisers solely to RBICs can rely on the RBIC adviser exemption in Advisers Act section 203(b)(8) to withdraw from registration and have no obligation to report information to the Commission on Form ADV.
- Registered investment advisers to RBICs and non-RBIC funds:
  - Registered investment advisers to private funds that include RBICs and non-RBICs may withdraw from registration and report to the Commission as exempt reporting advisers if their private fund assets under management in the United States are less than $150 million, excluding the assets of RBICs and SBICs.
  - Registered investment advisers to RBICs and other venture capital funds may withdraw from registration and report to the Commission as exempt reporting advisers because the definition of venture capital fund now includes RBICs.
- Exempt reporting advisers advising RBICs that qualified for the private fund adviser exemption may increase their total private fund assets under management in the United States above the $150 million threshold without triggering a requirement to register with the Commission as an investment adviser, provided that their non-RBIC private fund assets and non-SBIC private fund assets under management in the United States remain below the $150 million threshold.
- Advisers that did not advise RBICs and qualified for the venture capital fund adviser exemption may begin advising RBICs without changing their registration status.
- Advisers that did not advise RBICs and qualified for the private fund adviser exemption may begin advising RBICs without changing their registration status regardless of the amount of assets attributable to RBICs.

For those advisers that benefit from the alternatives above, it would have been in their economic interest to, depending on their class, withdraw from registration, avail themselves of exempt reporting adviser status, or attract additional RBIC assets following the passage of the RBIC Advisers Relief Act. We believe, therefore, that it is likely that such advisers have already exercised these options. Certain advisers who intend to advise RBICs solely, may rely on the RBIC adviser exemption to not register. Registered advisers who currently advise solely RBICs may rely on the RBIC adviser exemption to withdraw from registration with the Commission. Registered investment advisers to private funds that include RBICs and non-RBICs and have private fund assets under management in the United States of less than $150 million, excluding the assets of RBICs and SBICs, may have withdrawn from registration and begun reporting to the Commission as exempt reporting advisers in reliance on the private fund adviser exemption. Registered investment advisers to venture capital funds, including RBICs, may have withdrawn from registration and begun reporting to the Commission as exempt reporting advisers. Finally, advisers that qualified for the private fund adviser exemptions before the RBIC Advisers Relief Act amended the Advisers Act may have begun advising RBICs without changing their registration status independent of the amount of assets attributable to RBICs.

However, inconsistencies in the definitions of venture capital funds and private fund assets under management that exist between the Advisers Act rules and the Advisers Act as amended by the RBIC Advisers Relief Act may have discouraged some advisers from changing business practices following passage of the RBIC Advisers Relief Act. Furthermore, these inconsistencies may result in private fund assets under management being calculated differently by advisers for purposes of the private fund adviser exemption, which could lead to similar advisers determining their reporting statuses differently.

The amendments to our rules, which reflect the RBIC Advisers Relief Act amendments to the Advisers Act, may affect the classes of investment advisers mentioned above, the funds they advise, and the investors in those funds. We discuss the potential economic effects of the amendments and the RBIC Advisers Relief Act, including costs and benefits and impacts on efficiency, competition, and capital formation, on these investment advisers and investors in the next two sections.

B. Costs and Benefits

Because substantial portions of the amendments simply restate changes to Advisers Act section 203 that are self-implementing, even in the absence of regulatory action, the bulk of the economic effects of the amendments are not readily separable from those of the RBIC Advisers Relief Act's amendments to the Advisers Act. However, to the extent that inconsistencies between the current rules and the Advisers Act as amended by the RBIC Advisers Relief Act caused certain advisers not to exercise the exemption options under the Advisers Act as amended by the RBIC Advisers Relief Act when doing so would have otherwise been in their interest, the amendments could produce economic effects in addition to those resulting from the RBIC Advisers Relief Act's amendments to the Advisers Act themselves.

Because we believe that it is likely that advisers have already exercised any exemption options provided to them by the RBIC Advisers Relief Act's amendments to the Advisers Act under the baseline if doing so was in their interest, we do not expect the magnitude of the effects associated directly with the amendments to be significant. However, we do not have information on the extent to which advisers solely to RBICs have been deterred from exercising their options under the RBIC Advisers Relief Act's amendments to the Advisers Act due to any inconsistencies between the Advisers Act and Commission rules under the baseline and thus we cannot estimate how many additional advisers would exercise these options as a result of the amendments that have not already done so.

Notably, the economic effects of the amendments on advisers that had not previously chosen to exercise the exemption options under the RBIC Advisers Relief Act's amendments to the Advisers Act are generally consistent with the effects on advisers that have already chosen to do so; for example, advisers who choose to report to the Commission as exempt reporting advisers, whether they did so after the RBIC Advisers Relief Act amended the Advisers Act or will choose to do so after the amendments to our rules, will likely experience the same change in reporting costs. Any costs incurred before this rulemaking by advisers that already exercised exemption options provided to them by the RBIC Advisers Relief Act's amendments to the Advisers Act are a direct effect of the RBIC Advisers Relief Act; however, we do not have information to estimate the

number of advisers that have already exercised these options.

To the extent that any inconsistencies between the Advisers Act and Advisers Act rules 203(l)–1 and 203(m)–1 have discouraged advisers solely to RBICs from taking advantage of the venture capital fund adviser or private fund adviser exemptions, the amendments could lead these advisers to take on additional venture capital or private fund clients. Such advisers can weigh the additional fee revenue associated with advising non-RBIC private funds or venture capital funds against the costs of reporting to the Commission as exempt reporting advisers when determining whether to rely on either of the exemptions. We estimate that the annual cost of filing Form ADV for an exempt reporting adviser, who is not registered with any state securities authority, is approximately $983.[44] In addition, advisers that switch from exempt to exempt reporting status may incur indirect costs if the information they disclose on Form ADV, such as any disciplinary history, reduces investor demand for their advisory services. We are unable to estimate how many advisers solely to RBICs would choose to take on non-RBIC private funds or non-RBIC venture capital funds as a result of the amendments because we do not have information on the demand for their advisory services from non-RBIC private funds or non-RBIC venture capital funds, or whether any additional business generated would offset these reporting costs.

The amendments provide registered advisers that have not taken advantage of the venture capital fund adviser and private fund adviser exemptions due to inconsistencies between the RBIC Advisers Relief Act's amendments to the Advisers Act and Commission rules with clarification on the option to switch from registered investment adviser to exempt reporting adviser status. This option provided by the RBIC Advisers Relief Act is difficult to value, but its value is broadly determined by the cost reductions associated with the change in registration status compared to the explicit and implicit costs of withdrawing from registration. Advisers that elect to change (like those that already did so as a result of the RBIC Advisers Relief Act) from registered to exempt reporting adviser status and who are not also registering with a state authority should expect to face reduced ongoing costs associated with filing Form ADV because, as exempt reporting advisers who are not also registered with a state authority, they would only be required to complete certain portions of Form ADV.[45] We estimate the annual cost savings associated with filing Form ADV as an exempt reporting adviser who is not registered with any state securities authority, instead of as a registered investment adviser to be approximately $10,361.[46] Furthermore, such advisers would no longer bear the costs associated with the substantive requirements of being an adviser registered with the Commission.[47] Such advisers would incur the one-time cost of filing a Form ADV–W withdrawal, which we estimate to be approximately $117 per full withdrawal and $15 per partial withdrawal.[48] They may also incur one-time operational costs associated with switching from registered to exempt reporting status, such as those associated with adapting information technology systems to a new reporting regime. Finally, to the extent that advisers benefit from marketing themselves as registered investment advisers to client funds and investors, they will forgo this benefit by withdrawing from registration. Because advisers are not required to rely on either of the exemptions in Advisers Act rule 203(l) or 203(m) even though they may qualify for them, we expect only those registered investment advisers would experience a net benefit by relying on these exemptions to withdraw from registration.

Investors in private funds, venture capital funds, or RBICs may experience costs and benefits as a result of the amendments and the RBIC Advisers Relief Act. If investors face fixed costs in transacting with a given adviser, for example in performing any necessary due diligence, they may benefit if the amendments and the RBIC Advisers Relief Act encourage more advisers to advise both RBIC and non-RBIC private funds, allowing investors to consolidate different types of investments with a single adviser. We cannot quantify the extent to which investors prefer to use a single adviser or the number of advisers who will expand into either RBICs or non-RBIC private funds because we do not have the information needed to assess investors' latent demand for consolidated advice services or the number of advisers that have been deterred from expanding their client bases under the baseline. We therefore cannot estimate the magnitude of this potential cost reduction for investors.

In addition, to the extent that the amendments and the RBIC Advisers Relief Act result in advisers changing their status from registered to exempt reporting, it may impose costs on investors. If investors value the transparency provided by complete Form ADV reporting and the safeguards associated with the other substantive requirements of being a registered investment adviser, then the modifications could impose costs on investors if the modifications result in advisers changing their status from registered to exempt reporting. However, such investors have the option of moving their investments to advisers that are registered and, as noted above, we expect that advisers will weigh the benefits and costs associated with remaining registered in connection with any change in reporting status. The amendments and the RBIC Advisers Relief Act could also impose costs on investors if any reduction in transparency or the other substantive requirements associated with registration reduce the ability of the Commission to protect investors from potentially fraudulent investment advisory schemes.[49]

C. Efficiency, Competition, and Capital Formation

As discussed above, the RBIC Advisers Relief Act changed registration and reporting requirements for advisers solely to RBICs and for advisers to non-RBIC private funds or non-RBIC venture

[44] *Form ADV under the Investment Advisers Act of 1940* (OMB No. 3235–0049), Supporting Statement at footnote 43 and accompanying text (conclusion date of October 4, 2019). *See supra* footnote 9.

[45] *See supra* footnote 9.

[46] *Form ADV under the Investment Advisers Act of 1940* (OMB No. 3235–0049), Supporting Statement at footnote 10 (stating the number of registered investment advisers), footnote 45 (stating the total annual cost of filing Form ADV), footnote 43 (stating the annual filing cost per exempt reporting adviser), and accompanying text (conclusion date of October 4, 2019). We made the following calculations to find the estimated annual cost of filing Form ADV as a registered investment adviser: Total cost for registered investment advisers and exempt reporting advisers of approximately $141 million – total cost for exempt reporting advisers of approximately $4.6 million = total cost for registered investment advisers of approximately $136.4 million. Total cost for registered investment advisers of approximately $136.4 million/12,024 registered advisers = approximately $11,344 per registered investment adviser to file Form ADV annually. The estimated cost for an exempt reporting adviser who is not also registered with a state securities authority is approximately $983. $11,344 – $983 = $10,361.

[47] *See supra* footnote 10.

[48] *Rule 203–2 and Form ADV–W under the Investment Advisers Act of 1940* (OMB Control No. 3235–0313) Supporting Statement at footnotes 5 and 7 and accompanying text (conclusion date of November 22, 2017). An adviser would file a full withdrawal if it was only registered with the Commission. An adviser would file a partial withdrawal if it was required to remain registered with one or more states. *See* Form ADV–W, Instruction 1.

[49] *See supra* footnote 10.

capital funds, and may have resulted in an increased number of advisers in those markets. As a result of the RBIC Advisers Relief Act's amendments to the Advisers Act, advisers solely to RBICs may have entered the market for venture capital or other private fund advisory services, and current advisers to non-RBIC private funds or non-RBIC venture capital funds, may have entered the market for RBIC advisory services. As with the costs and benefits discussed above, the effects of the amendments on efficiency, competition, and capital formation are not readily separable from those of the RBIC Advisers Relief Act's amendments to the Advisers Act. We expect the amendments will only affect efficiency, competition, and capital formation to the extent that advisers have not already exercised the exemption options provided to them under the baseline due to any inconsistencies between the RBIC Advisers Relief Act's amendments to the Advisers Act, and Commission rules. Because we expect most advisers that would choose to change business practices because of amendments to the Advisers Act pursuant to the RBIC Advisers Relief Act already have done so, we do not expect the magnitude of these effects attributable solely to the amendments to be significant.

Changes in the costs of advising RBICs while also advising non-RBIC private funds or non-RBIC venture capital funds, as described above, could have several competitive effects. First, to the extent that non-RBIC private fund or non-RBIC venture capital fund advisers find it profitable to enter the market for RBICs under the amendments and the RBIC Advisers Relief Act's amendments to the Advisers Act, competition may increase in that market, resulting in reduced profits for RBIC advisers and lower advisory fees for RBICs and their investors. Similarly, to the extent that RBIC advisers find it profitable to enter the non-RBIC private fund or non-RBIC venture capital fund advisory market, competition in those markets may increase, resulting in reduced profits for non-RBIC private fund and non-RBIC venture capital fund advisers and lower advisory fees for non-RBIC private funds and non-RBIC venture capital funds and their investors. Whether such a reallocation of advisory services manifests depends on whether advisers find it profitable to expand operations into new markets and whether they can do so without changing the quality or quantity of services in current markets. While we cannot precisely estimate the relative likelihood of the above competitive effects, the fact that RBIC advisers operate in a market that is an order of magnitude smaller than the market in which non-RBIC private fund and non-RBIC venture capital fund advisers operate suggests that non-RBIC private fund and non-RBIC venture capital fund advisers are more likely to benefit from entry into the RBIC market following the RBIC Advisers Relief Act's enactment, thereby increasing the amount of competition in that market. As discussed above, it is likely that most advisers would have already exercised the options afforded them by the RBIC Advisers Relief Act if it was in their interest to do so. Therefore, the bulk of the competitive effects just discussed would have already been realized and the competitive effects directly attributable to the amendments are not likely to be significant.

Any relative shift of advisory talent from one segment of the market to another could also have effects on efficiency and capital formation. To the extent that advisers who expand into new markets possess skill in identifying investment opportunities, an increase in the supply of advisers in the RBIC, non-RBIC private fund, and non-RBIC venture capital fund markets could result in more efficient investment decisions and market prices that more accurately reflect the fundamental value of assets where applicable (for example, certain RBICs invest in private businesses that do not trade on public exchanges,[50] but some private funds invest in publicly-traded securities). Also, any increase in the number of advisers in the RBIC market could make more capital available to businesses in rural communities if the increased supply of RBIC advisers attracts more capital to that market. In addition, to the extent that there are economies of scale in the provision of advisory services, advisory services may be provided at lower aggregate cost if there is an expansion of advisers in either the RBIC, non-RBIC private fund or non-RBIC venture capital fund market. To the extent that the amendments and the RBIC Advisers Relief Act's amendments to the Advisers Act result in reduced transparency into advisers because they opt to switch from registered to exempt reporting status, and to the extent that investors rely on that transparency when making investment decisions, these changes might cause a reduction in the efficiency of investor allocations to these advisers. Any reduction in transparency could also reduce the aggregate amount of capital managed by investment advisers if investors cannot find suitable registered investment advisers as replacements and these investors value transparency more than any benefits, such as potentially lower advisory fees, of the amendments and the RBIC Advisers Relief Act's amendments to the Advisers Act. Finally, if these changes increase the supply of investment advisers to RBICs, non-RBIC private funds and non-RBIC venture capital funds, and these advisers attract assets that were not already invested in other markets, they may increase the aggregate amount of capital investment.

[50] *See* 7 CFR 4290.700.

V. Paperwork Reduction Act Analysis

We do not believe that the amendments to reflect changes that the RBIC Advisers Relief Act made to the Advisers Act make any substantive modifications to any existing collection of information requirements or impose any new substantive recordkeeping or information collection requirements within the meaning of the Paperwork Reduction Act of 1995 (''PRA'').[51] Accordingly, we are not revising any burden and cost estimates in connection with these amendments.[52]

VI. Statutory Authority

The Commission is amending rule 203(l)–1 under the authority set forth in sections 211(a) and 203(*l*) of the Advisers Act, (15 U.S.C. 80b–11(a) and 80b–3(*l*), respectively). The Commission is amending rule 203(m)–1 under the authority set forth in sections 211(a) and 203(m) of the Advisers Act (15 U.S.C. 80b–11(a) and 80b–3(m), respectively).

List of Subjects in 17 CFR Part 275

Reporting and recordkeeping requirements, Securities.

Text of The Rule Amendments

For the reasons set forth in the preamble, the Commission is amending title 17, chapter II of the Code of Federal Regulations as follows:

PART 275—RULES AND REGULATIONS, INVESTMENT ADVISERS ACT OF 1940

■ 1. The authority citation for part 275 continues to read in part as follows:

Authority: 15 U.S.C. 80b–2(a)(11)(G), 80b–2(a)(11)(H), 80b–2(a)(17), 80b–3, 80b–4, 80b–

[51] 44 U.S.C. 3501 *et seq.* As discussed in Section IV, only approximately 5 advisers would be affected by the amendments. Therefore, we believe that the amendments do not substantively change the current burdens and cost estimates because they may marginally affect the overall population of respondents.

[52] *Form ADV under the Investment Advisers Act of 1940* (OMB No. 3235–0049) (conclusion date of October 4, 2019).

4a, 80b–6(4), 80b–6a, and 80b–11, unless otherwise noted.

* * * * *

■ 2. Amend § 275.203(l)–1 by revising the introductory text to paragraph (a) to read as follows:

§ 275.203(l)–1 Venture capital fund defined.

(a) *Venture capital fund defined.* For purposes of section 203(*l*) of the Act (15 U.S.C. 80b–3(*l*)), a venture capital fund is any entity described in subparagraph (A), (B), or (C) of section 203(b)(7) of the Act (15 U.S.C. 80b–3(b)(7)) (other than an entity that has elected to be regulated or is regulated as a business development company pursuant to section 54 of the Investment Company Act of 1940 (15 U.S.C. 80a–53)) or any entity described in subparagraph (A) or (B) of section 203(b)(8) of the Act (15 U.S.C. 80b–3(b)(8)) (other than an entity that has elected to be regulated or is regulated as a business development company pursuant to section 54 of the Investment Company Act of 1940 (15 U.S.C. 80a–53)) or any private fund that:

* * * * *

■ 3. Amend § 275.203(m)–1 by revising paragraph (d)(1) to read as follows:

§ 275.203(m)–1 Private fund adviser exemption.

* * * * *

(d) * * *

(1) *Assets under management* means the regulatory assets under management as determined under Item 5.F of Form ADV (§ 279.1 of this chapter), except the following shall be excluded from the definition of assets under management for purposes of this section:

(i) The regulatory assets under management attributable to a private fund that is an entity described in subparagraph (A), (B), or (C) of section 203(b)(7) of the Act (15 U.S.C. 80b–3(b)(7)) (other than an entity that has elected to be regulated or is regulated as a business development company pursuant to section 54 of the Investment Company Act of 1940 (15 U.S.C. 80a–53)); and

(ii) The regulatory assets under management attributable to a private fund that is an entity described in subparagraph (A) or (B) of section 203(b)(8) of the Act (15 U.S.C. 80b–3(b)(8)) (other than an entity that has elected to be regulated or is regulated as a business development company pursuant to section 54 of the Investment Company Act of 1940 (15 U.S.C. 80a–53).

* * * * *

By the Commission.

Dated: March 2, 2020.

Vanessa A. Countryman,

Secretary.

[FR Doc. 2020–04571 Filed 3–9–20; 8:45 am]

BILLING CODE 8011–01–P

DEPARTMENT OF JUSTICE

Drug Enforcement Administration

21 CFR Part 1308

[Docket No. DEA–581]

Schedules of Controlled Substances: Placement of Cenobamate in Schedule V

AGENCY: Drug Enforcement Administration, Department of Justice.

ACTION: Interim final rule, with request for comments.

SUMMARY: On November 21, 2019, the U.S. Food and Drug Administration (FDA) approved a new drug application for XCOPRI (cenobamate) tablets. Cenobamate is chemically known as [(1R)-1-(2-chlorophenyl)-2-(tetrazol-2-yl)ethyl] carbamate. Thereafter, the Department of Health and Human Services provided the Drug Enforcement Administration (DEA) with a scheduling recommendation to place cenobamate in schedule V of the Controlled Substances Act (CSA). In accordance with the CSA, as revised by the Improving Regulatory Transparency for New Medical Therapies Act, DEA is hereby issuing an interim final rule placing cenobamate, including its salts, in schedule V of the CSA.

DATES: The effective date of this rulemaking is March 10, 2020. Interested persons may file written comments on this rulemaking in accordance with 21 U.S.C. 811(j)(3) and 21 CFR 1308.43(g). Electronic comments must be submitted, and written comments must be postmarked, on or before April 9, 2020. Commenters should be aware that the electronic Federal Docket Management System will not accept comments after 11:59 p.m. Eastern Time on the last day of the comment period.

Interested persons may file a request for hearing or waiver of hearing pursuant to 21 U.S.C. 811(j)(3) and 21 CFR 1308.44. Requests for hearing and waivers of an opportunity for a hearing or to participate in a hearing must be received on or before April 9, 2020.

ADDRESSES: To ensure proper handling of comments, please reference ''Docket No. DEA–581'' on all correspondence, including any attachments.

• *Electronic comments:* The Drug Enforcement Administration encourages that all comments be submitted electronically through the Federal eRulemaking Portal, which provides the ability to type short comments directly into the comment field on the web page or attach a file for lengthier comments. Please go to *http://www.regulations.gov* and follow the online instructions at that site for submitting comments. Upon completion of your submission, you will receive a Comment Tracking Number for your comment. Please be aware that submitted comments are not instantaneously available for public view on *Regulations.gov*. If you have received a Comment Tracking Number, your comment has been successfully submitted and there is no need to resubmit the same comment.

• *Paper comments:* Paper comments that duplicate the electronic submission are not necessary and are discouraged. Should you wish to mail a paper comment *in lieu of* an electronic comment, it should be sent via regular or express mail to: Drug Enforcement Administration, Attn: DEA **Federal Register** Representative/DPW, 8701 Morrissette Drive, Springfield, VA 22152.

• *Hearing requests:* All requests for hearing and waivers of participation must be sent to: Drug Enforcement Administration, Attn: Administrator, 8701 Morrissette Drive, Springfield, Virginia 22152. All requests for hearing and waivers of participation should also be sent to: (1) Drug Enforcement Administration, Attn: Hearing Clerk/LJ, 8701 Morrissette Drive, Springfield, Virginia 22152; and (2) Drug Enforcement Administration, Attn: DEA **Federal Register** Representative/DPW, 8701 Morrissette Drive, Springfield, Virginia 22152.

FOR FURTHER INFORMATION CONTACT: Scott Brinks, Diversion Control Division, Drug Enforcement Administration; Mailing Address: 8701 Morrissette Drive, Springfield, Virginia 22152; Telephone: (571) 362–3261.

SUPPLEMENTARY INFORMATION:

Posting of Public Comments

Please note that all comments received are considered part of the public record. They will, unless reasonable cause is given, be made available by the Drug Enforcement Administration (DEA) for public inspection online at *http://www.regulations.gov.* Such information includes personal identifying information (such as your name, address, etc.) voluntarily submitted by the commenter. The Freedom of Information Act (FOIA) applies to all comments received. If you want to

submit personal identifying information (such as your name, address, etc.) as part of your comment, but do not want it to be made publicly available, you must include the phrase ''PERSONAL IDENTIFYING INFORMATION'' in the first paragraph of your comment. You must also place all of the personal identifying information you do not want made publicly available in the first paragraph of your comment and identify what information you want redacted.

If you want to submit confidential business information as part of your comment, but do not want it to be made publicly available, you must include the phrase ''CONFIDENTIAL BUSINESS INFORMATION'' in the first paragraph of your comment. You must also prominently identify the confidential business information to be redacted within the comment.

Comments containing personal identifying information and confidential business information identified as directed above will generally be made publicly available in redacted form. If a comment has so much confidential business information or personal identifying information that it cannot be effectively redacted, all or part of that comment may not be made publicly available. Comments posted to *http://www.regulations.gov* may include any personal identifying information (such as name, address, and phone number) included in the text of your electronic submission that is not identified as directed above as confidential.

An electronic copy of this document and supplemental information, including the complete Department of Health and Human Services (HHS) and DEA eight-factor analyses, to this interim final rule are available at *http://www.regulations.gov* for easy reference.

Request for Hearing, Notice of Appearance at Hearing, or Waiver of Participation in Hearing

Pursuant to 21 U.S.C. 811(a), this action is a formal rulemaking ''on the record after opportunity for a hearing.'' Such proceedings are conducted pursuant to the provisions of the Administrative Procedure Act (APA), 5 U.S.C. 551–559. 21 CFR 1308.41–1308.45; 21 CFR part 1316, subpart D. Interested persons may file requests for a hearing, or notices of intent to participate in a hearing, in conformity with the requirements of 21 CFR 1308.44(a) or (b), and include a statement of interest in the proceeding and the objections or issues, if any, concerning which the person desires to be heard. Any interested person may file a waiver of an opportunity for a hearing or to participate in a hearing together with a written statement regarding the interested person's position on the matters of fact and law involved in any hearing as set forth in 21 CFR 1308.44(c).

All requests for a hearing and waivers of participation must be sent to DEA using the address information provided above.

Background and Legal Authority

Under the Improving Regulatory Transparency for New Medical Therapies Act (Pub. L. 114–89), which was signed into law on November 25, 2015, DEA is required to commence an expedited scheduling action with respect to certain new drugs approved by the United States Food and Drug Administration (FDA). As provided in 21 U.S.C. 811(j), this expedited scheduling is required where both of the following conditions apply: (1) The Secretary of the Department of Health and Human Services (Secretary of HHS or the Secretary) has advised DEA that a New Drug Application (NDA) has been approved for a drug that has a stimulant, depressant, or hallucinogenic effect on the central nervous system (CNS), and that it appears that such drug has an abuse potential; and, (2) the Secretary recommends that DEA control the drug in schedule II, III, IV, or V pursuant to 21 U.S.C. 811(a) and (b). In these circumstances, DEA is required to issue an interim final rule controlling the drug within 90 days.

The law further states that the 90-day timeframe starts the later of: (1) The date DEA receives HHS' scientific and medical evaluation/scheduling recommendation or (2) the date DEA receives notice of the NDA approval by HHS. In addition, the law specifies that the rulemaking shall become immediately effective as an interim final rule without requiring DEA to demonstrate good cause therefor. Thus, the purpose of subsection (j) is to speed the process by which DEA schedules newly approved drugs that are currently either in schedule I or not controlled (but which have sufficient abuse potential to warrant control) so that such drugs may be marketed without undue delay following FDA approval.[1]

Subsection (j) further provides that the interim final rule shall give interested persons the opportunity to comment and to request a hearing. After the conclusion of such proceedings, DEA must issue a final rule in accordance with the scheduling criteria of subsections 21 U.S.C. 811(b), (c), and (d) and 21 U.S.C. 812(b).

Cenobamate is a new molecular entity with CNS depressant properties, and is chemically known as [(1R)-1-(2-chlorophenyl)-2-(tetrazol-2-yl)ethyl] carbamate. Cenobamate is a voltage-gated sodium channel (Na_V) blocker that also has gamma-aminobutyric acid (GABA)-A channel positive allosteric modulator (PAM) activity. On November 21, 2018, SK Life Science (Sponsor) submitted an NDA to FDA for XCOPRI (cenobamate) 12.5, 25, 50, 100, 150, and 200 mg oral tablets. On November 22, 2019, DEA received notification from HHS that FDA, on November 21, 2019, approved the NDA for XCOPRI (cenobamate) under section 505(c) of the Federal Food, Drug, and Cosmetic Act (FDCA), for the treatment of partial-onset seizures in adult patients.

Determination to Schedule Cenobamate

Pursuant to 21 U.S.C. 811(a)(1), proceedings to add a drug or substance to those controlled under the CSA may be initiated by request of the Secretary of HHS.[2] On December 10, 2019, DEA received from HHS a scientific and medical evaluation document (dated December 3, 2019) prepared by FDA, titled ''Basis for the Recommendation to Control Cenobamate and Its Salts in Schedule V of the Controlled Substances Act.'' Pursuant to 21 U.S.C. 811(b) and (c), this document contained an eight-factor analysis of the abuse potential of cenobamate, along with HHS' recommendation to control cenobamate under schedule V of the CSA.

On January 15, 2020, DEA received from HHS a supplemental letter (dated January 15, 2020) clarifying factors 6 and 7 listed in 21 U.S.C. 811(c), as well as the third finding under 21 U.S.C. 812(b)(5), to control cenobamate in schedule V. This letter did not change HHS' overall recommendation to place cenobamate in schedule V.

In response, DEA reviewed the scientific and medical evaluation and scheduling recommendation provided by HHS, along with all other relevant data, and completed its own eight-factor review document pursuant to 21 U.S.C. 811(c). DEA concluded that cenobamate

[1] Given the parameters of subsection (j), in DEA's view, it would not apply to a reformulation of a drug containing a substance currently in schedules II through V for which an NDA has recently been approved.

[2] As set forth in a memorandum of understanding entered into by HHS, FDA, and the National Institute on Drug Abuse (NIDA), FDA acts as the lead agency within HHS in carrying out the Secretary's scheduling responsibilities under the CSA, with the concurrence of NIDA. 50 FR 9518, Mar. 8, 1985. The Secretary of HHS has delegated to the Assistant Secretary for Health of HHS the authority to make domestic drug scheduling recommendations. 58 FR 35460, July 1, 1993.

met the 21 U.S.C. 812(b)(5) criteria for placement in schedule V of the CSA.

Pursuant to subsection 811(j), and based on HHS recommendation, NDA approval by HHS/FDA, and DEA's determination, DEA is issuing this interim final rule to schedule cenobamate as a schedule V controlled substance under the CSA.

Included below is a brief summary of each factor as analyzed by HHS and DEA, and as considered by DEA in its scheduling action. Please note that both DEA and HHS analyses are available in their entirety under ''Supporting Documents'' in the public docket for this interim final rule at *http://www.regulations.gov,* under Docket Number ''DEA–581.'' Full analysis of, and citations to, the information referenced in the summary may also be found in the supporting and related material.

1. *Its Actual or Relative Potential for Abuse:* Cenobamate is a new molecular entity and is not currently available or marketed in any country. Evidence regarding its diversion, illicit manufacturing, or deliberate ingestions is currently lacking. However, as reported by HHS, preclinical studies show that cenobamate shares similar mechanisms of action as substances in schedules IV or V. Cenobamate, like the schedule V substance lacosamide, is a voltage-gated sodium channel (Na_v) blocker. In addition, cenobamate, like the schedule IV substances alprazolam, chlordiazepoxide, and midazolam, has gamma-aminobutyric acid (GABA)-A channel positive allosteric modulator (PAM) activity and increases the effects of the inhibitory neurotransmitter, GABA. Data obtained from general behavioral studies demonstrate that cenobamate produces abuse-related CNS activity. In a preclinical drug discrimination study in rats, cenobamate mimicked the discriminative stimulus effects of the schedule IV substance chlordiazepoxide. However, in a separate drug discrimination study, cenobamate only partially mimicked the discriminative stimulus effects of the schedule IV substance midazolam. In addition, cenobamate, like midazolam, produced reinforcing effects in a rat self-administration assay by significantly increasing the number of infusions compared to saline infusions. In human abuse potential (HAP) studies, cenobamate produced drug-liking visual analog scale scores that were significantly higher compared to placebo but significantly lower than the schedule IV substance alprazolam. Thus, these studies demonstrate that cenobamate produced behavioral effects in rats comparable to that of schedule IV substances (*i.e.,* similar to chlordiazepoxide but less than midazolam); whereas in humans, cenobamate produced drug-liking effects that were significantly less than that of the schedule IV substance alprazolam. Thus, cenobamate likely has abuse potential less than that of schedule IV substances but similar to that of schedule V substances of the CSA. Based on the totality of the available scientific data, HHS concluded that cenobamate has an abuse potential similar to that of substances in schedule V of the CSA.

2. *Scientific Evidence of Its Pharmacological Effects, if Known:* Cenobamate shares similar mechanisms of action to substances in schedule IV or V and has anti-epileptic activity in humans. Cenobamate, like the schedule V substance lacosamide, is a voltage-gated sodium channel blocker. In addition, cenobamate, like the schedule IV benzodiazepines chlordiazepoxide, midazolam, and alprazolam, is a GABA-A channel positive allosteric modulator. Cenobamate and other GABAergic substances interact directly with the GABA-A receptor which is a ligand-gated chloride ion channel consisting of five subunits and a central chloride channel to enhance the opening of the ligand-gated chloride channel and the influx of chloride. Cenobamate's ability to bind to GABA-A receptors and sodium channel sites is consistent with the action of anti-epileptic or sedative drugs, such as chlordiazepoxide, midazolam, alprazolam, and lacosamide (schedule IV or V substances).

As described in HHS' review document, studies evaluating cenobamate's effect in these general behavioral studies showed that cenobamate mimicked or partially mimicked substances such as chlordiazepoxide, alprazolam, or midazolam (schedule IV substances) in producing behaviors that are associated with abuse. In an *in vivo* drug discrimination study in rats, cenobamate produced chlordiazepoxide-like (schedule IV) discriminative stimulus effects. In a separate drug discrimination study, cenobamate produced discriminative stimulus effects that partially mimicked the effects of the schedule IV substance midazolam. In self-administration studies, cenobamate was self-administered by rodents, but the self-administration (*i.e.,* number of infusions) of cenobamate was lower than that of midazolam, a schedule IV substance. In HAP studies, cenobamate produced drug-liking scores higher than placebo but less than that of the schedule IV substance alprazolam. Based on these studies, HHS concluded that cenobamate has mechanisms of actions that are similar to that of substances in schedule IV or V but the abuse potential of cenobamate is less than that of alprazolam, a schedule IV substance.

3. *The State of Current Scientific Knowledge Regarding the Drug or Other Substance:* Cenobamate is a new molecular entity. It is chemically known as [(1R)-1-(2-chlorophenyl)-2-(tetrazol-2-yl)ethyl] carbamate. Other chemical names for cenobamate include: 2H-tetrazole-2-ethanol, alpha-(2-chlorophenyl)-, carbamate (ester), (alphaR)-; and carbamic acid (R)-(+)-1-(2-chlorophenyl)-2-(2H-tetrazol-2-yl)ethyl ester. It has a molecular formula of $C_{10}H_{10}ClN_5O_2$ and a molecular weight of 267.67 g/mol. Cenobamate is a white to off-white crystalline solid that has a melting point between 96.8–98.3 °C. It is partially soluble in water at a pH between 2 and 12. Pharmacokinetic data indicate that cenobamate is rapidly absorbed, has good bioavailability, and has a long half-life. Additional studies in humans show that cenobamate is not extensively metabolized and does not produce any major circulating metabolites. On November 21, 2019, FDA approved an NDA for XCOPRI (cenobamate) for the treatment of partial-onset seizures in adult patients. Thus, cenobamate has an accepted medical use in the United States.

4. *Its History and Current Pattern of Abuse:* There is no information on the history and current pattern of abuse for cenobamate, since it has not been marketed, legally or illegally, in any country.

On December 19, 2019, DEA conducted a search on the National Forensic Laboratory Information System (NFLIS) [3] and the STARLiMS [4] databases for cenobamate's encounters. Consistent with the fact that cenobamate is a new molecular entity, these databases had no records of encounters by law enforcement.

The pharmacological activity of cenobamate, like schedule IV or V GABAergic or anti-epileptic substances, at sodium channels and GABA-A receptors suggests that cenobamate's pattern of abuse would be less than that

[3] NFLIS is a national forensic laboratory reporting system that systematically collects results from drug chemistry analyses conducted by Federal, State, and local forensic laboratories in the United States.

[4] STARLiMS is a laboratory information management system that systematically collects results from drug chemistry analyses conducted by DEA laboratories. On October 1, 2014, STARLiMS replaced STRIDE as the DEA laboratory drug evidence data system of record.

of schedule IV substances but similar to that of schedule V anti-epileptic drugs.

5. *The Scope, Duration, and Significance of Abuse:* Cenobamate is not marketed, legally or illegally, in any country. However, HHS stated that based on the preclinical and clinical study data of cenobamate, the scope, duration, and significance of cenobamate abuse would likely be similar to that of schedule V substances.

6. *What, if any, Risk There is to the Public Health:* According to HHS, the public health risk associated with cenobamate is due to its abuse potential. Thus, HHS concluded that the data from preclinical and clinical studies (see Factor 2, above) showed that cenobamate has abuse potential and physical or psychological dependence (Factor 7) similar to that of substances in schedule V.

7. *Its Psychic or Physiological Dependence Liability:* The psychic or physiological dependence liability of drugs can be demonstrated by abuse-related animal and human studies (see Factor 2, above). In animal studies, there were no significant alterations in the withdrawal phase of the study in the measured parameters at either of the tested doses. However, in human studies, cenobamate led to a mild withdrawal syndrome characterized by insomnia, decreased appetite, depressed mood, tremor, and amnesia. Based on these studies, HHS concluded that cenobamate has a psychic or physiological dependence liability similar to that of substances in schedule V.

8. *Whether the Substance is an Immediate Precursor of a Substance Already Controlled under the CSA:* Cenobamate is not an immediate precursor of any substance already controlled in the CSA.

Conclusion: After considering the scientific and medical evaluation conducted by HHS, HHS' recommendation, and its own eight-factor analysis, DEA has determined that these facts and all relevant data constitute substantial evidence of a potential for abuse of cenobamate. As such, DEA hereby schedules cenobamate as a controlled substance under the CSA.

Determination of Appropriate Schedule

The CSA lists the findings required to place a drug or other substance in any particular schedule (I, II, III, IV, or V). 21 U.S.C. 812(b). After consideration of the analysis and recommendation of the Assistant Secretary for Health of HHS and review of all available data, the Acting Administrator of DEA, pursuant to 21 U.S.C. 812(b)(5), finds that:

(1) Cenobamate has a low potential for abuse relative to the drugs or other substances in schedule IV.

Cenobamate, similar to the schedule IV substance lacosamide, is a voltage-gated sodium channel blocker that also has GABA-A channel PAM activity similar to schedule IV benzodiazepines. In drug discrimination studies, cenobamate partially generalized to the discriminative stimulus effects of midazolam (schedule IV) but fully generalized to the discriminative stimulus effects of chlordiazepoxide (schedule IV) in rats. In self-administration studies, cenobamate was self-administered by rodents, but the self-administration (*i.e.,* number of infusions) of cenobamate was lower than that of midazolam. In the HAP studies, cenobamate produced drug-liking scores higher than placebo but less than that of alprazolam, a schedule IV substance. Based on all of these studies, HHS concluded that cenobamate has an abuse potential similar to that of substances in schedule V of the CSA. Thus, DEA finds that the potential for abuse of cenobamate is less than that of schedule IV benzodiazepines but similar to that of substances in schedule V of the CSA.

(2) Cenobamate has a currently accepted medical use in the United States.

FDA recently approved an NDA for cenobamate as a treatment for partial-onset seizures in adult patients. Thus, cenobamate has a currently accepted medical use in treatment in the United States.

(3) Abuse of Cenobamate may lead to limited physical dependence or psychological dependence relative to the drugs or other substances in schedule IV.

HHS reported in Factor 7 that cenobamate may lead to mild withdrawal syndromes characterized by insomnia, decreased appetite, and amnesia in humans. Thus, based on clinical study and preclinical data, HHS concluded in Factor 6 that cenobamate has a physical or psychological dependence liability similar to that of substances controlled in schedule V. In a separate letter, dated January 15, 2020, HHS further stated that based on the totality of available scientific data, cenobamate may lead to physical or psychological dependence that is low relative to substances in schedule IV of the CSA and similar to that of substances in schedule V. Based on these data, DEA finds that the abuse of cenobamate may lead to limited physical or psychological dependence relative to the drugs or other substances in schedule IV.

Based on these findings, the Acting Administrator of DEA concludes that cenobamate warrants control in schedule V of the CSA. 21 U.S.C. 812(b)(5).

Requirements for Handling Cenobamate

Cenobamate is subject to the CSA's schedule V regulatory controls and administrative, civil, and criminal sanctions applicable to the manufacture, distribution, reverse distribution, dispensing, importing, exporting, research, and conduct of instructional activities and chemical analysis with, and possession involving schedule V substances, including the following:

1. *Registration.* Any person who handles (manufactures, distributes, reverse distributes, dispenses, imports, exports, engages in research, or conducts instructional activities or chemical analysis with, or possesses) cenobamate, or who desires to handle cenobamate, must be registered with DEA to conduct such activities pursuant to 21 U.S.C. 822, 823, 957, and 958 and in accordance with 21 CFR parts 1301 and 1312. Any person who currently handles or intends to handle cenobamate, and is not registered with DEA, must submit an application for registration and may not continue to handle cenobamate, unless DEA has approved that application for registration, pursuant to 21 U.S.C. 822, 823, 957, and 958, and in accordance with 21 CFR parts 1301 and 1312.

2. *Disposal of stocks.* Any person who does not desire or is not able to maintain a schedule V registration must surrender all quantities of currently held cenobamate or may transfer all quantities of cenobamate to a person registered with DEA in accordance with 21 CFR part 1317, in addition to all other applicable federal, state, local, and tribal laws.

3. *Security.* Cenobamate is subject to schedule III–V security requirements and must be handled and stored in accordance with 21 CFR 1301.71–1301.93.

4. *Labeling and Packaging.* All labels, labeling, and packaging for commercial containers of cenobamate must comply with 21 U.S.C. 825 and 958(e), and be in accordance with 21 CFR part 1302.

5. *Inventory.* Every DEA registrant who possesses any quantity of cenobamate must take an inventory of cenobamate on hand, pursuant to 21 U.S.C. 827 and 958, and in accordance with 21 CFR 1304.03, 1304.04, and 1304.11.

Any person who becomes registered with DEA to handle cenobamate must take an initial inventory of all stocks of controlled substances (including

cenobamate) on hand on the date the registrant first engages in the handling of controlled substances, pursuant to 21 U.S.C. 827 and 958(e), and in accordance with 21 CFR 1304.03, 1304.04, and 1304.11.

After the initial inventory, every DEA registrant must take a new inventory of all stocks of controlled substances (including cenobamate) on hand every two years, pursuant to 21 U.S.C. 827 and 958(e), and in accordance with 21 CFR 1304.03, 1304.04, and 1304.11.

6. *Records and Reports.* DEA registrants must maintain records and submit reports for cenobamate, pursuant to 21 U.S.C. 827 and 958(e), and in accordance with 21 CFR parts 1304, 1312, and 1317.

7. *Prescriptions.* All prescriptions for cenobamate, or products containing cenobamate, must comply with 21 U.S.C. 829, and be issued in accordance with 21 CFR parts 1306 and 1311, subpart C.

8. *Manufacturing and Distributing.* In addition to the general requirements of the CSA and DEA regulations that are applicable to manufacturers and distributors of schedule V controlled substances, such registrants should be advised that (consistent with the foregoing considerations) any manufacturing or distribution of cenobamate may only be for the legitimate purposes consistent with the drug's labeling, or for research activities authorized by the FDCA and the CSA.

9. *Importation and Exportation.* All importation and exportation of cenobamate must be in compliance with 21 U.S.C. 952, 953, 957, and 958, and in accordance with 21 CFR part 1312.

10. *Liability.* Any activity involving cenobamate not authorized by, or in violation of, the CSA or its implementing regulations, is unlawful, and may subject the person to administrative, civil, and/or criminal sanctions.

Regulatory Analyses

Administrative Procedure Act

Section 553 of the Administrative Procedure Act (APA) (5 U.S.C. 553) generally requires notice and comment for rulemakings. However, 21 U.S.C. 811 provides that in cases where a certain new drug is (1) approved by HHS and (2) HHS recommends control in CSA schedule II–V, DEA shall issue an interim final rule scheduling the drug within 90 days. Additionally, the law specifies that the rulemaking shall become immediately effective as an interim final rule without requiring DEA to demonstrate good cause.

Executive Orders 12866, 13563, and 13771, Regulatory Planning and Review, Improving Regulation and Regulatory Review, and Reducing Regulation and Controlling Regulatory Costs

In accordance with 21 U.S.C. 811(a) and (j), this scheduling action is subject to formal rulemaking procedures performed ''on the record after opportunity for a hearing,'' which are conducted pursuant to the provisions of 5 U.S.C. 556 and 557. The CSA sets forth the procedures and criteria for scheduling a drug or other substance. Such actions are exempt from review by the Office of Management and Budget (OMB) pursuant to section 3(d)(1) of Executive Order 12866 and the principles reaffirmed in Executive Order 13563.

This interim final rule is not an Executive Order 13771 regulatory action pursuant to Executive Order 12866 and OMB guidance.[5]

Executive Order 12988, Civil Justice Reform

This regulation meets the applicable standards set forth in sections 3(a) and 3(b)(2) of Executive Order 12988 to eliminate drafting errors and ambiguity, minimize litigation, provide a clear legal standard for affected conduct, and promote simplification and burden reduction.

Executive Order 13132, Federalism

This rulemaking does not have federalism implications warranting the application of Executive Order 13132. The rule does not have substantial direct effects on the States, on the relationship between the national government and the States, or on the distribution of power and responsibilities among the various levels of government.

Executive Order 13175, Consultation and Coordination With Indian Tribal Governments

This rule does not have tribal implications warranting the application of Executive Order 13175. It does not have substantial direct effects on one or more Indian tribes, on the relationship between the Federal government and Indian tribes, or on the distribution of power and responsibilities between the Federal government and Indian tribes.

Regulatory Flexibility Act

The Regulatory Flexibility Act (RFA) (5 U.S.C. 601–612) applies to rules that are subject to notice and comment under section 553(b) of the APA. Under 21 U.S.C. 811(j), DEA is not required to publish a general notice of proposed rulemaking. Consequently, the RFA does not apply to this interim final rule.

Unfunded Mandates Reform Act of 1995

In accordance with the Unfunded Mandates Reform Act (UMRA) of 1995, 2 U.S.C. 1501 *et seq.,* DEA has determined that this action would not result in any Federal mandate that may result ''in the expenditure by State, local, and tribal governments, in the aggregate, or by the private sector, of $100,000,000 or more (adjusted annually for inflation) in any 1 year.'' Therefore, neither a Small Government Agency Plan nor any other action is required under UMRA of 1995.

Paperwork Reduction Act of 1995

This action does not impose a new collection of information requirement under the Paperwork Reduction Act of 1995. 44 U.S.C. 3501–3521. This action would not impose recordkeeping or reporting requirements on State or local governments, individuals, businesses, or organizations. An agency may not conduct or sponsor, and a person is not required to respond to, a collection of information unless it displays a currently valid OMB control number.

Congressional Review Act

This rule is not a major rule as defined by the Congressional Review Act (CRA), 5 U.S.C. 804. This rule will not result in: An annual effect on the economy of $100,000,000 or more; a major increase in costs or prices for consumers, individual industries, Federal, State, or local government agencies, or geographic regions; or significant adverse effects on competition, employment, investment, productivity, innovation, or on the ability of U.S.-based companies to compete with foreign based companies in domestic and export markets. However, pursuant to the CRA, DEA has submitted a copy of this interim final rule to both Houses of Congress and to the Comptroller General.

List of Subjects in 21 CFR Part 1308

Administrative practice and procedure, Drug traffic control, Reporting and recordkeeping requirements.

For the reasons set out above, DEA amends 21 CFR part 1308 as follows:

[5] Office of Mgmt. & Budget, Exec. Office of The President, Interim Guidance Implementing Section 2 of the Executive Order of January 30, 2017 Titled ''Reducing Regulating and Controlling Regulatory Costs'' (Feb. 2, 2017).

PART 1308—SCHEDULES OF CONTROLLED SUBSTANCES

■ 1. The authority citation for part 1308 continues to read as follows:

Authority: 21 U.S.C. 811, 812, 871(b), unless otherwise noted.

■ 2. Amend § 1308.15 by:

■ a. Redesignating paragraphs (e)(2) through (5) as (e)(3) through (6), respectively;

■ b. Adding new paragraph (e)(2). The addition reads as follows:

§ 1308.15 Schedule V.

* * * * *

(e) * * *

(2) Cenobamate ([(1R)-1-(2-chlorophenyl)-2-(tetrazol-2-yl)ethyl] carbamate; 2*H*-tetrazole-2-ethanol, alpha-(2-chlorophenyl)-, carbamate (ester), (alpha*R*)-; carbamic acid (*R*)-(+)-1-(2-chlorophenyl)-2-(2*H*-tetrazol-2-yl)ethyl ester) 2720

* * * * *

Dated: March 5, 2020.

Uttam Dhillon,

Acting Administrator.

[FR Doc. 2020–04963 Filed 3–9–20; 8:45 am]

BILLING CODE 4410–09–P

DEPARTMENT OF THE TREASURY

Office of Foreign Assets Control

31 CFR Part 595

Removal of Terrorism Sanctions Regulations

AGENCY: Office of Foreign Assets Control, Treasury.

ACTION: Final rule.

SUMMARY: The Department of the Treasury's Office of Foreign Assets Control (OFAC) is removing from the Code of Federal Regulations the Terrorism Sanctions Regulations as a result of the termination of the national emergency on which the regulations were based.

DATES: *Effective Date:* March 10, 2020.

FOR FURTHER INFORMATION CONTACT: OFAC: Assistant Director for Licensing, 202–622–2480; Assistant Director for Regulatory Affairs, 202–622–4855; or Assistant Director for Sanctions Compliance & Evaluation, 202–622–2490.

SUPPLEMENTARY INFORMATION:

Electronic Availability

This document and additional information concerning OFAC are available on OFAC's website (*www.treasury.gov/ofac*).

Background

On January 23, 1995, the President issued Executive Order 12947, ''Prohibiting Transactions With Terrorists Who Threaten To Disrupt the Middle East Peace Process'' (E.O. 12947), declaring a national emergency with respect to ''grave acts of violence committed by foreign terrorists that disrupt the Middle East peace process,'' and invoking the authority, *inter alia,* of the International Emergency Economic Powers Act (50 U.S.C. 1701–1706). In E.O. 12947, the President blocked all property and interests in property of (1) persons listed in the Annex to E.O. 12947; (2) foreign persons designated by the Secretary of State, in coordination with the Secretary of the Treasury and the Attorney General, because they are found (a) to have committed, or to pose a significant risk of committing, acts of violence that have the purpose or effect of disrupting the Middle East peace process, or (b) to assist in, sponsor, or provide financial, material, or technological support for, or services in support of, such acts of violence; and (3) persons determined by the Secretary of the Treasury, in coordination with the Secretary of State and the Attorney General, to be owned or controlled by, or to act for or on behalf of, any of the foregoing persons.

On February 2, 1996, OFAC issued the Terrorism Sanctions Regulations, 31 CFR part 595 (the ''Regulations''), as a final rule to implement E.O. 12947. The Regulations were amended on several occasions.

On August 20, 1998, the President issued Executive Order 13099, ''Prohibiting Transactions With Terrorists Who Threaten To Disrupt the Middle East Peace Process'' (E.O. 13099), amending the Annex to E.O. 12947 in order to take additional steps with respect to the national emergency declared in E.O. 12947. On February 16, 2005, the President issued Executive Order 13372, ''Clarification of Certain Executive Orders Blocking Property and Prohibiting Certain Transactions,'' further amending E.O. 12947 in order to clarify steps taken in E.O. 12947 as amended by E.O. 13099.

On September 9, 2019, the President issued Executive Order 13886, ''Modernizing Sanctions To Combat Terrorism'' (E.O. 13886). In E.O. 13886, the President found that it was necessary to consolidate and enhance sanctions to combat acts of terrorism and threats of terrorism by foreign terrorists. Accordingly, he terminated the national emergency declared in E.O. 12947, as amended, and revoked that order.

As a result, OFAC is removing the Regulations from the Code of Federal Regulations. Pursuant to section 202 of the National Emergencies Act (50 U.S.C. 1622), termination of the national emergency declared in E.O. 12947, as amended, shall not affect any action taken or proceeding pending and not finally concluded or determined as of 12:01 a.m. eastern daylight time on September 10, 2019 (the effective date of E.O. 13886), any action or proceeding based on any act committed prior to the effective date, or any rights or duties that matured or penalties that were incurred prior to the effective date.

Public Participation

Because the Regulations involve a foreign affairs function, the provisions of Executive Order 12866 and the Administrative Procedure Act (5 U.S.C. 553) requiring notice of proposed rulemaking, opportunity for public participation, and delay in effective date, as well as the provisions of Executive Order 13771, are inapplicable. Because no notice of proposed rulemaking is required for this rule, the Regulatory Flexibility Act (5 U.S.C. 601–612) does not apply.

Paperwork Reduction Act

The Paperwork Reduction Act does not apply because this rule does not impose information collection requirements that would require the approval of the Office of Management and Budget under 44 U.S.C. 3501 *et seq.*

List of Subjects in 31 CFR Part 595

Administrative practice and procedure, Banks, Banking and finance, Blocking of assets, Fines and penalties, Reporting and recordkeeping requirements, Specially designated terrorists, Terrorism, Transfer of assets.

PART 595—[REMOVED]

■ For the reasons set forth in the preamble, and under the authority of 3 U.S.C. 301; 31 U.S.C. 321(b); 50 U.S.C. 1601–1651, 1701–1706; Public Law 101–410, 104 Stat. 890 (28 U.S.C. 2461 note); Public Law 110–96, 121 Stat.1011; E.O. 12947, 60 FR 5079, 3 CFR, 1995 Comp., p. 319; E.O. 13099, 63 FR 45167, 3 CFR, 1998 Comp., p. 208; E.O. 13372, 70 FR 8499, 3 CFR, 2006 Comp., p. 159; and E.O. 13886, 84 FR 48041 (September 12, 2019), OFAC

amends 31 CFR chapter V by removing part 595.

Dated: March 5, 2020.

Andrea Gacki,

Director, Office of Foreign Assets Control.

[FR Doc. 2020–04851 Filed 3–9–20; 8:45 am]

BILLING CODE 4810–AL–P

DEPARTMENT OF HOMELAND SECURITY

Coast Guard

33 CFR Part 100

[Docket No. USCG–2020–0140]

Special Local Regulation; California Half Ironman Triathlon, Oceanside, CA

AGENCY: Coast Guard, DHS.

ACTION: Notice of enforcement of regulation.

SUMMARY: The Coast Guard will enforce the California Half Ironman Triathlon special local regulation on the waters offshore Oceanside and within Oceanside Harbor, California on April 4, 2020. These special local regulations are necessary to provide for the safety of the participants, crew, spectators, sponsor vessels of the triathlon, and general users of the waterway. During the enforcement period, persons and vessels are prohibited from entering into, transiting through, or anchoring within this regulated area unless authorized by the Captain of the Port, or his designated representative.

DATES: The regulations in 33 CFR 100.1101 will be enforced for the California Half Ironman Triathlon regulated area listed in item 2 in Table 1 to § 100.1101 from 6 a.m. to 10 a.m. on April 4, 2020.

FOR FURTHER INFORMATION CONTACT: If you have questions about this notice of enforcement, call or email Lieutenant Briana Biagas, Waterways Management, U.S. Coast Guard Sector San Diego, CA; telephone (619) 278–7656, email *D11MarineEventsSD@uscg.mil.*

SUPPLEMENTARY INFORMATION: The Coast Guard will enforce the special local regulations in 33 CFR 100.1101 for the California Half Ironman Triathlon in Oceanside, CA from 6 a.m. to 10 a.m. on April 4, 2020. This action is being taken to provide for the safety of life on navigable waterways during the triathlon event. Our regulation for marine events within the Eleventh Coast Guard District, Table 1 to § 100.1101, item 2, specifies the location of the regulated area for the California Half Ironman Triathlon which encompasses the waters of Oceanside Harbor, CA, including the entrance channel. Under the provisions of § 100.1101, persons and vessels are prohibited from anchoring, blocking, loitering, or impeding within this regulated area unless authorized by the Captain of the Port, or his designated representative. The Coast Guard may be assisted by other Federal, State, or local law enforcement agencies in enforcing this regulation.

In addition to this document in the **Federal Register**, the Coast Guard will provide the maritime community with advance notification of this enforcement period via the Local Notice to Mariners, Broadcast Notice to Mariners, and local advertising by the event sponsor.

If the Captain of the Port Sector San Diego or his designated representative determines that the regulated area need not be enforced for the full duration stated on this document, he or she may use a Broadcast Notice to Mariners or other communications coordinated with the event sponsor to grant general permission to enter the regulated area.

Dated: March 4, 2020.

T.J. Barelli,

Captain, U.S. Coast Guard, Captain of the Port San Diego.

[FR Doc. 2020–04789 Filed 3–9–20; 8:45 am]

BILLING CODE 9110–04–P

DEPARTMENT OF HOMELAND SECURITY

Coast Guard

33 CFR Part 100

[Docket No. USCG–2020–0136]

Special Local Regulation; San Diego Crew Classic, San Diego, CA

AGENCY: Coast Guard, DHS.

ACTION: Notice of enforcement of regulation.

SUMMARY: The Coast Guard will enforce the San Diego Crew Classic special local regulation on the waters of Mission Bay, California on April 4, 2020 and April 5, 2020. These special local regulations are necessary to provide for the safety of the participants, crew, spectators, sponsor vessels, and general users of the waterway. During the enforcement period, persons and vessels are prohibited from anchoring, blocking, loitering, or impeding within this regulated area unless authorized by the Captain of the Port, or his designated representative.

DATES: The regulations in 33 CFR 100.1101 will be enforced for the San Diego Crew Classic regulated area listed in item 3 in Table 1 to § 100.1101 from 6 a.m. to 7 p.m. on April 4, 2020 and April 5, 2020.

FOR FURTHER INFORMATION CONTACT: If you have questions about this notice of enforcement, call or email Lieutenant Briana Biagas, Waterways Management, U.S. Coast Guard Sector San Diego, CA; telephone (619) 278–7656, email *D11MarineEventsSD@uscg.mil.*

SUPPLEMENTARY INFORMATION: The Coast Guard will enforce the special local regulations in 33 CFR 100.1101 Table 1, Item 3 of that section for the San Diego Crew Classic in Mission Bay, CA from 6 a.m. to 7 p.m. on April 4, 2020, and from 6 a.m. to 7 p.m. on April 5, 2020. This action is being taken to provide for the safety of life on navigable waterways during the 2-day rowing race event. Our regulation for marine events within the Eleventh Coast Guard District, § 100.1101, specifies the location of the regulated area for the San Diego Crew Classic which encompasses the waters of Mission Bay to include South Pacific Passage, Fiesta Bay, and the waters around Vacation Isle. Under the provisions of § 100.1101, persons and vessels are prohibited from anchoring, blocking, loitering, or impeding within this regulated area unless authorized by the Captain of the Port, or his designated representative. The Coast Guard may be assisted by other Federal, State, or local law enforcement agencies in enforcing this regulation.

In addition to this notice of enforcement in the **Federal Register**, the Coast Guard will provide the maritime community with advance notification of this enforcement period via the Local Notice to Mariners, Broadcast Notice to Mariners, and local advertising by the event sponsor.

If the Captain of the Port Sector San Diego or his designated representative determines that the regulated area need not be enforced for the full duration stated on this document, he or she may use a Broadcast Notice to Mariners or other communications coordinated with the event sponsor to grant general permission to enter the regulated area.

Dated: March 4, 2020.

T.J. Barelli,

Captain, U.S. Coast Guard, Captain of the Port San Diego.

[FR Doc. 2020–04786 Filed 3–9–20; 8:45 am]

BILLING CODE 9110–04–P

ENVIRONMENTAL PROTECTION AGENCY

40 CFR Part 52

[EPA–R01–OAR–2019–0695; FRL–10005–36–Region 1]

Air Plan Approval; Massachusetts; Infrastructure State Implementation Plan Requirements for the 2015 Ozone Standard

AGENCY: Environmental Protection Agency (EPA).

ACTION: Direct final rule.

SUMMARY: The Environmental Protection Agency (EPA) is approving a State Implementation Plan (SIP) revision submitted by the Commonwealth of Massachusetts. Except as noted, this revision satisfies the infrastructure requirements of the Clean Air Act (CAA) for the 2015 ozone National Ambient Air Quality Standards (NAAQS). The infrastructure requirements are designed to ensure that the structural components of each state's air quality management program are adequate to meet the state's responsibilities under the CAA. We are issuing a finding of failure to submit pertaining to the various aspects of infrastructure SIPS relating to the prevention of significant deterioration (PSD). The Commonwealth has long been subject to a Federal Implementation Plan (FIP) regarding PSD, thus the finding of failure to submit will result in no sanctions or further FIP requirements. We do not in this action address CAA 110(a)(2)(D)(i)(I) requirements regarding interstate transport, because we previously approved the Commonwealth's submittal addressing these requirements for the 2015 ozone standard (January 31, 2020). This action is being taken in accordance with the Clean Air Act.

DATES: This direct final rule will be effective May 11, 2020, unless EPA receives adverse comments by April 9, 2020. If adverse comments are received, EPA will publish a timely withdrawal of the direct final rule in the **Federal Register** informing the public that the rule will not take effect.

ADDRESSES: Submit your comments, identified by Docket ID No. EPA–R01–OAR–2019–0695 at *https://www.regulations.gov,* or via email to *rackauskas.eric@epa.gov.* For comments submitted at *Regulations.gov*, follow the online instructions for submitting comments. Once submitted, comments cannot be edited or removed from *Regulations.gov*. For either manner of submission, the EPA may publish any comment received to its public docket. Do not submit electronically any information you consider to be Confidential Business Information (CBI) or other information whose disclosure is restricted by statute. Multimedia submissions (audio, video, etc.) must be accompanied by a written comment. The written comment is considered the official comment and should include discussion of all points you wish to make. The EPA will generally not consider comments or comment contents located outside of the primary submission (*i.e.,* on the web, cloud, or other file sharing system). For additional submission methods, please contact the person identified in the **FOR FURTHER INFORMATION CONTACT** section. For the full EPA public comment policy, information about CBI or multimedia submissions, and general guidance on making effective comments, please visit *https://www.epa.gov/dockets/commenting-epa-dockets.* Publicly available docket materials are available at *https://www.regulations.gov* or at the U.S. Environmental Protection Agency, EPA Region 1 Regional Office, Air and Radiation Division, 5 Post Office Square—Suite 100, Boston, MA. EPA requests that if at all possible, you contact the contact listed in the **FOR FURTHER INFORMATION CONTACT** section to schedule your inspection. The Regional Office's official hours of business are Monday through Friday, 8:30 a.m. to 4:30 p.m., excluding legal holidays.

FOR FURTHER INFORMATION CONTACT: Eric Rackauskas, Air Quality Branch, U.S. Environmental Protection Agency, EPA New England Regional Office, 5 Post Office Square—Suite 100, (Mail code 05–2), Boston, MA 02109–3912, tel. 617–918–1628, email *rackauskas.eric@epa.gov.*

SUPPLEMENTARY INFORMATION: Throughout this document whenever ''we,'' ''us,'' or ''our'' is used, we mean EPA.

Table of Contents

I. Background and Purpose
II. Infrastructure SIP Evaluation
III. Final Action
IV. Statutory and Executive Order Reviews

I. Background and Purpose

On September 27, 2018, the Massachusetts Department of Environmental Protection (DEP) submitted a formal revision to its State Implementation Plan (SIP). The SIP revision contains the Commonwealth's ''Certification of Adequacy of the Massachusetts State Implementation Plan Regarding Clean Air Act Sections 110(a)(1) and (2) for the 2015 Ozone National Ambient Air Quality Standards.'' When EPA promulgates a new or revised NAAQS, states must submit these certifications (or infrastructure SIPS) to ensure that their SIP provides for implementation, maintenance, and enforcement of the respective NAAQS.

EPA previously approved Massachusetts' infrastructure SIP for the 2008 ozone standard (as part of a notice approving five total NAAQS infrastructure SIPS) on December 21, 2016 (81 FR 93627). The September 27, 2018 submission contains virtually the same information as the previous SIP approved version, with a few minor updates and date changes. Please note that if EPA receives adverse comment on an amendment, paragraph, or section of this rule and if that provision may be severed from the remainder of the rule, EPA may adopt as final those provisions of the rule that are not the subject of an adverse comment.

A. What is the scope of this rulemaking?

Whenever EPA promulgates a new or revised NAAQS, CAA section 110(a)(1) requires states to make SIP submissions to provide for the implementation, maintenance, and enforcement of the NAAQS. This particular type of SIP submission is commonly referred to as an ''infrastructure SIP.'' These submissions must meet the various requirements of CAA section 110(a)(2), as applicable. Due to ambiguity in some of the language of CAA section 110(a)(2), EPA believes that it is appropriate to interpret these provisions in the specific context of acting on infrastructure SIP submissions. EPA has previously provided comprehensive guidance on the application of these provisions through a guidance document for infrastructure SIP submissions and through regional actions on infrastructure submissions.[1] Unless otherwise noted below, we are following that existing approach in acting on this submission. In addition, in the context of acting on such infrastructure submissions, EPA evaluates the submitting state's SIP for compliance with statutory and regulatory requirements, not for the

[1] EPA explains and elaborates on these ambiguities and its approach to address them in its September 13, 2013, Infrastructure SIP Guidance (available at *https://www3.epa.gov/airquality/urbanair/sipstatus/docs/* Guidance_on_Infrastructure_SIP_Elements_Multipollutant_FINAL_Sept_2013.pdf), as well as in numerous agency actions, including EPA's prior action on Massachusetts' infrastructure SIP to address the 1997 ozone, 2008 lead, 2008 ozone, 2010 nitrogen dioxide, and 2010 sulfur dioxide NAAQS. 81 FR 93627 (December 21, 2016).

state's implementation of its SIP.[2] The EPA has other authority to address any issues concerning a state's implementation of the rules, regulations, consent orders, etc. that comprise its SIP.

B. What guidance is EPA using to evaluate Massachusetts' infrastructure SIP submission?

EPA highlighted the statutory requirement to submit infrastructure SIPs within 3 years of promulgation of a new NAAQS in an October 2, 2007, guidance document entitled ''Guidance on SIP Elements Required Under Sections 110(a)(1) and (2) for the 1997 8-hour Ozone and $PM_{2.5}$ National Ambient Air Quality Standards'' (2007 guidance). EPA has issued additional guidance documents and memoranda, including a September 13, 2013, guidance document entitled ''Guidance on Infrastructure State Implementation Plan (SIP) Elements under Clean Air Act Sections 110(a)(1) and 110(a)(2)'' (2013 guidance).

II. Infrastructure SIP Evaluation

The following review evaluates the state's submissions regarding CAA section 110(a)(2) requirements and relevant EPA guidance.

A. Section 110(a)(2)(A)—Emission Limits and Other Control Measures

This section of the Act requires SIPs to include enforceable emission limits and other control measures, means or techniques, schedules for compliance, and other related matters. However, EPA has long interpreted emission limits and control measures for attaining the standards as being due when nonattainment planning requirements are due.[3] In the context of an infrastructure SIP, EPA is not evaluating the existing SIP provisions for this purpose. Instead, EPA is only evaluating whether the state's SIP has basic structural provisions for the implementation of the NAAQS. Massachusetts General Law (M.G.L.) c. 21A, section 8, *Executive Office of Energy and Environmental Affairs Organization of Departments; powers, duties and functions,* creates and sets forth the powers and duties of the Department of Environmental Protection (MassDEP) within the Executive Office of Energy and Environmental Affairs. In addition, M.G.L. c. 111, sections 142A through 142N, which, collectively, are referred to as the *Massachusetts Pollution Control Laws,* provide MassDEP with broad authority to prevent pollution or contamination of the atmosphere and to prescribe and establish appropriate regulations. Furthermore, M.G.L. c. 21A, section 18, *Permit applications and compliance assurance fees; timeline action schedules; regulations,* authorizes MassDEP to establish fees applicable to the regulatory programs it administers.

MassDEP has adopted numerous regulations within the Code of Massachusetts Regulations (CMR) in furtherance of the objectives set out by these statutes, including 310 CMR 4.00, *Timely Action & Fee Schedule Regulations,* 310 CMR 6.00, *Ambient Air Quality Standards for the Commonwealth of Massachusetts,* and 310 CMR 7.00, *Air Pollution Control Regulations.* For example, many SIP-approved State air quality regulations within 310 CMR 7.00 provide enforceable emission limitations and other control measures, means or techniques, schedules for compliance, and other related matters that satisfy the requirements of the CAA section 110(a)(2)(A) for the 2015 ozone NAAQS, including but not limited to 7.18, *Volatile and Halogenated Organic Compounds,* 7.19, *Reasonably Available Control Technology (RACT) for Sources of NOx,* and 7.29, *Emission Standards for Power Plants.* EPA finds that MassDEP meets the infrastructure SIP requirements of section 110(a)(2)(A) with respect to the 2015 ozone NAAQS.

B. Section 110(a)(2)(B)—Ambient Air Quality Monitoring/Data System

This section requires SIPs to provide for establishment and operation of appropriate devices, methods, systems, and procedures necessary to monitor, compile, and analyze ambient air quality data, and make these data available to EPA upon request. Each year, states submit annual air monitoring network plans to EPA for review and approval. EPA's review of these annual monitoring plans includes our evaluation of whether the State: (i) Monitors air quality at appropriate locations throughout the State using EPA-approved Federal Reference Methods or Federal Equivalent Method monitors; (ii) submits data to EPA's Air Quality System (AQS) in a timely manner; and (iii) provides EPA Regional Offices with prior notification of any planned changes to monitoring sites or the network plan.'' Under MGL c. 111, sections 142B to 142D, MassDEP operates an air monitoring network. EPA approved the state's most recent Annual Air Monitoring Network Plan on November 25, 2019. In addition to having an adequate air monitoring network, MassDEP populates AQS with air quality monitoring data in a timely manner and provides EPA with prior notification when considering a change to its monitoring network or plan. EPA finds that MassDEP has met the infrastructure SIP requirements of section 110(a)(2)(B) with respect to the 2015 ozone NAAQS.

C. Section 110(a)(2)(C)—Program for Enforcement of Control Measures and for Construction or Modification of Stationary Sources

States are required to include a program providing for enforcement of all SIP measures and the regulation of construction of new or modified stationary sources to meet NSR requirements under PSD and nonattainment new source review (NNSR) programs. Part C of the CAA (sections 160–169B) addresses PSD, while part D of the CAA (sections 171–193) addresses NNSR requirements. The evaluation of each state's submission addressing the infrastructure SIP requirements of section 110(a)(2)(C) covers the following: (i) Enforcement of SIP measures; (ii) PSD program for major sources and major modifications; and, (iii) permitting program for minor sources and minor modifications.

i. Sub-Element 1: Enforcement of SIP Measures

MassDEP staffs and implements an enforcement program pursuant to authorities provided within the following laws: M.G.L. c. 111, section 2C, *Pollution violations; orders of department of environmental protection,* which authorizes MassDEP to issue orders enforcing pollution control regulations generally; M.G.L. c. 111, sections 142A through 142O, *Massachusetts Air Pollution Control Laws,* which, among other things, more specifically authorize MassDEP to adopt regulations to control air pollution, enforce such regulations, and issue penalties for non-compliance; and, M.G.L. c. 21A, section 16, *Civil Administrative Penalties,* which provides additional authorizations for MassDEP to assess penalties for failure to comply with the Commonwealth's air pollution control laws and regulations. Moreover, SIP-approved regulations, such as 310 CMR 7.02(12)(e) and (f), provide a program for the enforcement of SIP measures. Accordingly, EPA finds that Massachusetts has met this requirement of section 110(a)(2)(C) with respect to the 2015 ozone NAAQS.

[2] *See Montana Envtl. Info. Ctr.* v. *Thomas,* 902 F.3d 971 (9th Cir. 2018).

[3] See, *e.g.,* EPA's final rule on ''National Ambient Air Quality Standards for Lead.'' 73 FR 66964, 67034 (November 12, 2008).

ii. Sub-Element 2: Preconstruction Program for Major Sources and Major Modifications

Sub-element 2 of section 110(a)(2)(C) requires that states provide for the regulation of modification and construction of any stationary source as necessary to assure that the NAAQS are achieved, including a program to meet PSD and NNSR requirements. PSD applies to new major sources or modifications made to major sources for pollutants where the area in which the source is located is in attainment of, or unclassifiable regarding, the relevant NAAQS, and NNSR requires similar actions in nonattainment areas.

As MassDEP recognizes in the submittal, Massachusetts does not have an approved state PSD program and has long been subject to a Federal Implementation Plan (FIP). The Commonwealth implements and enforces the federal PSD program through a delegation agreement. *See* 76 FR 31241 (May 31, 2011). Accordingly, EPA is issuing a finding of failure to submit with respect to the PSD-related requirements of this sub-element for the 2015 ozone NAAQS. This finding will not trigger any additional FIP obligation by the EPA, because the deficiency is addressed by the FIP already in place. Nor is the Commonwealth subject to mandatory sanctions solely as a result of this finding because the SIP submittal deficiencies are neither with respect to a sub-element that is required under part D nor in response to a SIP call under section 110(k)(5) of the Act.

iii. Sub-Element 3: Preconstruction Permitting for Minor Sources and Minor Modifications

To address the pre-construction regulation of the modification and construction of minor stationary sources and minor modifications of major stationary sources, an infrastructure SIP submission should identify the existing EPA-approved SIP provisions and/or include new provisions that govern the minor source pre-construction program that regulates emissions of the relevant NAAQS pollutants. EPA's most recent approval of the Commonwealth's minor NSR program occurred on April 5, 1995. 60 FR 17226. Since this date, Massachusetts and EPA have relied on the existing minor NSR program to ensure that new and modified sources not captured by the major NSR permitting programs do not interfere with attainment and maintenance of the 2015 ozone NAAQS.

In summary, EPA finds that Massachusetts meets the enforcement-related aspects of Section 110(a)(2)(C) discussed above within sub-element 1, and the preconstruction permitting requirements for minor sources discussed in sub-element 3, for the 2015 ozone NAAQS. As to preconstruction PSD permitting of major sources and major modifications, EPA finds that the Commonwealth has failed to make the required submission.

D. Section 110(a)(2)(D)—Interstate Transport

This section contains a comprehensive set of air quality management elements pertaining to the transport of air pollution with which States must comply. It covers the following five topics, categorized as sub-elements: Sub-element 1, Significant contribution to nonattainment, and interference with maintenance of a NAAQS; Sub-element 2, PSD; Sub-element 3, Visibility protection; Sub-element 4, Interstate pollution abatement; and Sub-element 5, International pollution abatement. Sub-elements 1 through 3 above are found under section 110(a)(2)(D)(i) of the Act, and these items are further categorized into the four prongs discussed below, two of which are found within sub-element 1. Sub-elements 4 and 5 are found under section 110(a)(2)(D)(ii) of the Act and include provisions insuring compliance with sections 115 and 126 of the Act relating to interstate and international pollution abatement.

i. Sub-Element 1: Section 110(a)(2)(D)(i)(I)—Contribute to Nonattainment (Prong 1) and Interfere With Maintenance of the NAAQS (Prong 2)

Section 110(a)(2)(D)(i)(I) of the CAA requires a SIP to prohibit any emissions activity in the State that will contribute significantly to nonattainment or interfere with maintenance of the NAAQS in any downwind State. EPA commonly refers to these requirements as prong 1 (significant contribution to nonattainment) and prong 2 (interference with maintenance), or jointly as the ''Good Neighbor'' or ''transport'' provisions of the CAA. EPA has previously approved Massachusetts' Good Neighbor SIP for the 2015 ozone NAAQS.[4] 85 FR 5772 (January 31, 2020). Therefore, Massachusetts has already met this requirement for the 2015 ozone NAAQS.

ii. Sub-Element 2: Section 110(a)(2)(D)(i)(II)—PSD (Prong 3)

To prevent significant deterioration of air quality, this sub-element requires SIPs to include provisions that prohibit any source or other type of emissions activity in one State from interfering with measures that are required in any other State's SIP under Part C of the CAA. One way for a State to meet this requirement, specifically with respect to in-State sources and pollutants that are subject to PSD permitting, is through a comprehensive PSD permitting program that applies to all regulated NSR pollutants and that satisfies the requirements of EPA's PSD implementation rules. For in-State sources not subject to PSD, this requirement can be satisfied through a fully-approved nonattainment new source review (NNSR) program with respect to any previous NAAQS.

As discussed under element C above and as noted in the submittal, Massachusetts has long been subject to a PSD FIP and has implemented and enforced the federal PSD program through a delegation agreement with EPA. Accordingly, EPA makes a finding of failure to submit with respect to the PSD requirement of this sub-element for the 2015 ozone NAAQS. This finding does not trigger any sanctions or additional FIP obligation for the same reasons discussed under element C above.

Under prong 3 of 110(a)(2)(D)(i)(II), EPA also reviews the potential for in-State sources not subject to PSD to interfere with PSD in an attainment or unclassifiable area of another State. EPA generally considers a fully approved NNSR program adequate for purposes of meeting this requirement of prong 3 with respect to in-state sources and pollutants not subject to PSD. *See* 2013 guidance. EPA last approved the Commonwealth's NNSR program on May 29, 2019. 84 FR 24719. Accordingly, we approve Massachusetts' submittal for the 2015 ozone NAAQS for the NNSR aspect of prong 3.

iii. Sub-Element 3: Section 110(a)(2)(D)(i)(II)—Visibility Protection (Prong 4)

Regarding the applicable requirements for visibility protection of section 110(a)(2)(D)(i)(II), States are subject to visibility and regional haze program requirements under part C of the CAA (which includes sections 169A and 169B). The 2013 guidance explains that these requirements can be satisfied by an approved SIP addressing reasonably attributable visibility impairment, if required, or an approved SIP addressing regional haze. A fully approved regional haze SIP meeting the requirements of 40 CFR 51.308 will ensure that emissions from sources

[4] EPA is not reopening for comment determinations made in that action.

under an air agency's jurisdiction are not interfering with measures required to be included in other air agencies' plans to protect visibility. On September 19, 2013, EPA approved Massachusetts' Regional Haze SIP as meeting the requirements of 40 CFR 51.308. *See* 78 FR 57487. Accordingly, EPA finds that Massachusetts meets the visibility protection requirements of 110(a)(2)(D)(i)(II) for the 2015 ozone NAAQS.

iv. Sub-Element 4: Section 110(a)(2)(D)(ii)—Interstate Pollution Abatement

This sub-element requires that each SIP contain provisions requiring compliance with requirements of section 126 relating to interstate pollution abatement. Section 126(a) requires new or modified sources to notify neighboring States of potential impacts from the source. The statute does not specify the method by which the source should provide the notification. States with SIP-approved PSD programs must have a provision requiring such notification by new or modified sources.

As mentioned elsewhere in this document, Massachusetts does not have a SIP-approved PSD program and is currently subject to a PSD FIP, which includes a requirement to notify any State whose lands may be affected by emissions from the Massachusetts PSD source. *See* 40 CFR 52.21(q), 124.10(c)(1)(vii); *see also id.* section 52.1165. While we find that the Commonwealth failed to make a submittal for the 2015 ozone NAAQS for section 110(a)(2)(D)(ii) with respect to the PSD-related notice of interstate pollution, such finding does not trigger any additional FIP obligation by the EPA under section 110(c)(1), because the federal PSD rules address the notification issue. Nor does the finding trigger any sanctions. Finally, Massachusetts has no obligations under any other provision of section 126.

v. Sub-Element 5: Section 110(a)(2)(D)(ii)—International Pollution Abatement

This sub-element also requires each SIP to contain provisions requiring compliance with the applicable requirements of section 115 relating to international pollution abatement. Section 115 authorizes the Administrator to require a state to revise its SIP to alleviate international transport into another country where the Administrator has made a finding with respect to emissions of the particular NAAQS pollutant and its precursors, if applicable. There are no final findings under section 115 against Massachusetts for the 2015 ozone NAAQS. Therefore, EPA finds that Massachusetts meets the applicable infrastructure SIP requirements of section 110(a)(2)(D)(ii) related to section 115 of the CAA (international pollution abatement) for the 2015 ozone NAAQS.

E. Section 110(a)(2)(E)—Adequate Resources

Section 110(a)(2)(E)(i) requires each SIP to provide assurances that the State will have adequate personnel, funding, and legal authority under state law to carry out its SIP, and related issues. Additionally, Section 110(a)(2)(E)(ii) requires each state to comply with the requirements with respect to state boards under section 128. Finally, section 110(a)(2)(E)(iii) requires that, where a state relies upon local or regional governments or agencies for the implementation of its SIP provisions, the state retain responsibility for ensuring adequate implementation of SIP obligations with respect to relevant NAAQS. This last sub-element, however, is not applicable to this action, because Massachusetts does not rely upon local or regional governments or agencies for the implementation of its SIP provisions.

i. Sub-Element 1: Adequate Personnel, Funding, and Legal Authority Under State Law To Carry Out Its SIP, and Related Issues

Massachusetts, through its infrastructure SIP submittals, has documented that its air agency has the requisite authority and resources to carry out its SIP obligations. Massachusetts General Laws c. 111, sections 142A to 142N, provide MassDEP with the authority to carry out the state's implementation plan. The Massachusetts SIP, as originally submitted in 1971 and subsequently amended, provides descriptions of the staffing and funding necessary to carry out the plan. In the submittals, MassDEP provides assurances that it has adequate personnel and funding to carry out the SIP during the five years following infrastructure SIP submission and in future years. Additionally, the Commonwealth receives CAA section 103 and 105 grant funds through Performance Partnership agreements and provides state matching funds, which together enable Massachusetts to carry out its SIP requirements. EPA finds that Massachusetts meets the infrastructure SIP requirements of section 110(a)(2)(E)(i) for the 2015 ozone NAAQS.

ii. Sub-Element 2: State Board Requirements Under Section 128 of the CAA

Section 110(a)(2)(E) also requires each SIP to contain provisions that comply with the state board requirements of section 128(a) of the CAA. That provision contains two explicit requirements: (1) That any board or body which approves permits or enforcement orders under this chapter shall have at least a majority of members who represent the public interest and do not derive any significant portion of their income from persons subject to permits and enforcement orders under this chapter, and (2) that any potential conflicts of interest by members of such board or body or the head of an executive agency with similar powers be adequately disclosed.

Massachusetts does not have a state board that approves permits or enforcement orders under the CAA. Instead, permits and enforcement orders are approved by the Commissioner of MassDEP. Thus, Massachusetts is not subject to the requirements of paragraph (a)(1) of section 128. As to the conflict of interest provisions of section 128(a)(2), Massachusetts has cited to M.G.L. c. 268A of the Commonwealth's Conflict of Interest law in its infrastructure SIP submittal for the 2015 ozone NAAQS. EPA previously approved M.G.L. c. 268A, sections 6 and 6A, into the SIP in satisfaction of this infrastructure SIP requirement. 81 FR 93627 (December 21, 2016). Pursuant to these state provisions, state employees in Massachusetts, including the head of an executive agency with authority to approve air permits or enforcement orders, are required to disclose potential conflicts of interest to, among others, the state ethics commission. EPA finds that the Massachusetts SIP satisfies the requirements of section 110(a)(2)(E)(ii) of the Clean Air Act for the 2015 ozone NAAQS.

F. Section 110(a)(2)(F)—Stationary Source Monitoring System

States must establish a system to monitor emissions from stationary sources and submit periodic emissions reports. Each plan shall also require the installation, maintenance, and replacement of equipment, and the implementation of other necessary steps, by owners or operators of stationary sources to monitor emissions from such sources. The state plan shall also require periodic reports on the nature and amounts of emissions and emissions-related data from such sources, and correlation of such reports by each state agency with any emission

limitations or standards established pursuant to this chapter. Lastly, the reports shall be available at reasonable times for public inspection.

Pursuant to M.G.L. c. 111, sections 142A to 142D, MassDEP has the necessary authority to maintain and operate air monitoring stations and coordinates with EPA in determining the types and locations of ambient air monitors across the state. The Commonwealth uses this authority to require the installation, maintenance, and replacement of emissions monitoring equipment by, and to collect information on air emissions from, sources in the state. Additionally, Massachusetts statutes and regulations provide that emissions data shall be available for public inspection. *See, e.g.,* M.G.L. c. 21I, section 20(K), M.G.L. c. 111, section 142B; 310 CMR section 3.33(5), 7.12(4)(b); 7.14(1). The following SIP-approved regulations enable the accomplishment of the Commonwealth's emissions recording, reporting, and correlating objectives:

1. 310 CMR 7.12, Source Registration.
2. 310 CMR 7.13, Stack Testing.
3. 310 CMR 7.14, Monitoring Devices and Reports.

EPA recognizes that Massachusetts routinely collects information on air emissions from its industrial sources and makes this information available to the public. EPA therefore finds that the Commonwealth meets the infrastructure SIP requirements of section 110(a)(2)(F) with respect to the 2015 ozone NAAQS.

G. Section 110(a)(2)(G)—Emergency Powers

This section requires that a plan provide for authority analogous to that provided in section 303 of the CAA, and adequate contingency plans to implement such authority. Section 303 of the CAA provides authority to the EPA Administrator to seek a court order to restrain any source from causing or contributing to emissions that present an ''imminent and substantial endangerment to public health or welfare, or the environment.'' Section 303 further authorizes the Administrator to issue ''such orders as may be necessary to protect public health or welfare or the environment'' in the event that ''it is not practicable to assure prompt protection . . . by commencement of such civil action.''

We find that the Commonwealth's ISIP submittal demonstrates that a combination of state statutes and regulations provide for authority comparable to that in section 303. Massachusetts' submittal cites M.G.L. C. 111, section 2B, *Air Pollution Emergencies,* which authorizes the Commissioner of the MassDEP to ''declare an air pollution emergency'' if the Commissioner ''determines that the condition or impending condition of the atmosphere in the Commonwealth . . . constitutes a present or reasonably imminent danger to health.'' During such an air pollution emergency, the Commissioner is authorized pursuant to section 2B, to ''take whatever action is necessary to maintain and protect the public health, including but not limited to . . . prohibiting, restricting and conditioning emissions of dangerous or potentially dangerous air contaminants from whatever source derived . . .'' Additionally, sections 2B and 2C authorize the Commissioner to issue emergency orders.

Moreover, M.G.L. c. 21A, section 8 provides that, ''[i]n regulating . . . any pollution prevention, control or abatement plan [or] strategy . . . through any . . . departmental action affecting or prohibiting the emission . . . of any hazardous substance to the environment . . . the department may consider the potential effects of such plans [and] strategies . . . on public health and safety and the environment . . . and said department shall act to minimize and prevent damage or threat of damage to the environment.''

These duties are implemented, in part, under MassDEP regulations at 310 CMR 8.00, *Prevention and Abatement of Air Pollution Episodes and Air Pollution Incident Emergencies,* the most recent revisions to which EPA approved into the SIP on March 4, 2019. 84 FR 7299. These regulations establish levels that would constitute significant harm or imminent and substantial endangerment to health for ambient concentrations of pollutants subject to a NAAQS, consistent with the significant harm levels and procedures for state emergency episode plans established by EPA in 40 CFR part 51.150 and 51.151. Finally, M.G.L. c. 111, section 2B authorizes the state to seek injunctive relief in the superior court for violation of an emergency order issued by the MassDEP Commissioner. While no single Massachusetts statute or regulation mirrors the authorities of CAA section 303, we find that the combination of state statutes and regulations discussed herein provide for comparable authority to immediately bring suit to restrain, and issue orders against, any person causing or contributing to air pollution that presents an imminent and substantial endangerment to public health or welfare, or the environment.

Section 110(a)(2)(G) also requires that, for any NAAQS, States have an approved contingency plan for any Air Quality Control Region (AQCR) within the state that is classified as Priority I, IA, or II. *See* 40 CFR 51.152(c). Two AQCRs in Massachusetts are classified as Priority I for ozone, with the remaining AQCRs classified as Priority III for ozone. *Id.* 52.1121. As noted above, EPA approved 310 CMR 8.00 into the SIP to satisfy the contingency plan requirements of CAA section 110(a)(2)(G) for a previous infrastructure SIP submittal for the 2008 ozone NAAQS. 84 FR 7299. This state regulation satisfies the applicable requirements for contingency plans at 40 CFR part 51, subpart H (40 CFR 51.150 through 51.153) (*Prevention of Air Pollution Emergency Episodes*). For the above reasons, EPA finds that Massachusetts meets the infrastructure SIP requirements of CAA section 110(a)(2)(G) for the 2015 ozone NAAQS.

H. Section 110(a)(2)(H)—Future SIP Revisions

This section requires that a state's SIP provide for revision as may be necessary to take account of changes in the NAAQS or availability of improved methods for attaining the NAAQS and whenever the EPA finds that the SIP is substantially inadequate. Massachusetts General Laws c. 111, section 142D provides in relevant part that, ''From time to time the department shall review the ambient air quality standards and plans for implementation, maintenance and attainment of such standards adopted pursuant to this section and, after public hearings, shall amend such standards and implementation plan so as to minimize the economic cost of such standards and plan for implementation, provided, however, that such standards shall not be less than the minimum federal standards.'' This authorizing statute gives MassDEP the power to revise the Massachusetts SIP from time to time as may be necessary to take account of changes in the NAAQS or availability of improved methods for attaining the NAAQS and whenever the EPA finds that the SIP is substantially inadequate. Accordingly, EPA finds that Massachusetts meets the infrastructure SIP requirements of CAA section 110(a)(2)(H) for the 2015 ozone NAAQS.

I. Section 110(a)(2)(I)—Nonattainment Area Plan or Plan Revisions Under Part D

The CAA requires that each plan or plan revision for an area designated as a nonattainment area meet the applicable requirements of part D of the CAA. Part D relates to nonattainment areas. EPA has determined that section

110(a)(2)(I) is not applicable to the infrastructure SIP process. Instead, EPA takes action on part D attainment plans through separate processes.

J. Section 110(a)(2)(J)—Consultation With Government Officials; Public Notifications; PSD; Visibility Protection

Section 110(a)(2)(J) of the CAA requires that each SIP ''meet the applicable requirements of section 121 of this title (relating to consultation), section 127 of this title (relating to public notification), and part C of this subchapter (relating to PSD of air quality and visibility protection).'' The evaluation of the submission from Massachusetts with respect to these requirements is described below.

i. Sub-Element 1: Consultation With Government Officials

Section 121 of the Act requires states to provide a process for consultation with local governments and Federal Land Managers (FLMs) in carrying out NAAQS implementation requirements.

Pursuant to EPA-approved Massachusetts regulations at 310 CMR 7.02(12)(g)(2), MassDEP notifies the public ''by advertisement in a newspaper having wide circulation'' in the area of the particular facility of the opportunity to comment on certain proposed permitting actions and sends ''a copy of the notice of public comment to the applicant, the EPA, and officials and agencies having jurisdiction over the community in which the facility is located, including local air pollution control agencies, chief executives of said community, and any regional land use planning agency.'' In addition, Massachusetts Executive Order 145, ''Consultation with Cities & Towns on Administrative Mandates,'' which EPA approved into the SIP on June 24, 2019, establishes a process for agencies of the Commonwealth to consult with local governments. 84 FR 29380. In its submittal, Massachusetts lists additional authorities and processes on which it relies to provide for consultation with local governments when carrying out requirements of the CAA. MassDEP notes that, with respect to the requirement to consult with FLMs, it relies in part on the FLM consultation requirement contained in the PSD FIP to meet this obligation. As previously mentioned, Massachusetts does not have an approved state PSD program, but rather is subject to a PSD FIP, which, as MassDEP notes, includes a provision requiring consultation with FLMs. *See* 40 CFR 52.21(p). Consequently, with respect to the 2015 ozone NAAQS, EPA finds that Massachusetts has met the consultation with local governments requirement of this portion of section 110(a)(2)(J) but issues a finding of failure to submit with respect to the FLM consultation requirement for PSD permitting. Because the federal PSD program, which Massachusetts implements and enforces, addresses this FLM consultation requirement, a finding of failure to submit does not result in sanctions or new FIP obligations.

ii. Sub-Element 2: Public Notification

Section 127 of the Act requires states to: Notify the public if NAAQS are exceeded in an area; advise the public of health hazards associated with exceedances; and enhance public awareness of measures that can be taken to prevent exceedances and of ways in which the public can participate in regulatory and other efforts to improve air quality.

Massachusetts regulations specify criteria for air pollution episodes and incidents and provide for notice to the public via news media and other means of communication. *See* 310 CMR 8.00. The Commonwealth also provides a daily air quality forecast to inform the public about concentrations of fine particles and, during the ozone season, provides similar information for ozone. Real time air quality data for NAAQS pollutants are also available on the MassDEP's website, as are information about health hazards associated with NAAQS pollutants and ways in which the public can participate in regulatory efforts related to air quality. The Commonwealth is also an active partner in EPA's AirNow and EnviroFlash air quality alert programs, which notify the public of air quality levels through EPA's website, alerts, and press releases. In light of the above, we find that Massachusetts meets the infrastructure SIP requirements of this requirement of section 110(a)(2)(J) with respect to the 2015 ozone NAAQS.

iii. Sub-Element 3: PSD

Pursuant to Section 110(a)(2)(J), States must also meet applicable requirements of Part C of the Act (relating to PSD). The Commonwealth's PSD program in the context of infrastructure SIPs has already been discussed in the paragraphs addressing sections 110(a)(2)(C), (D)(i)(II), and (D)(ii), and our actions for those sections are consistent with the proposed action for this portion of section 110(a)(2)(J). Specifically, we are making a finding of failure to submit with respect to the PSD sub-element of section 110(a)(2)(J) for the 2015 ozone NAAQS and note that such a finding does not result in any sanctions or new FIP obligations.

iv. Sub-Element 4: Visibility Protection

With regard to the applicable requirements for visibility protection, states are subject to visibility and regional haze program requirements under part C of the CAA (which includes sections 169A and 169B). In the event of the establishment of a new NAAQS, however, the visibility and regional haze program requirements under part C do not change. Thus, we find that there is no new visibility obligation ''triggered'' under section 110(a)(2)(J) when a new NAAQS becomes effective. In other words, the visibility protection requirements of section 110(a)(2)(J) are not germane to infrastructure SIP for the 2015 Ozone NAAQS.

K. Section 110(a)(2)(K)—Air Quality Modeling/Data

Section 110(a)(2)(K) of the Act requires that a SIP provide for the performance of such air-quality modeling as the EPA Administrator may prescribe to predict the effect on ambient air quality of any emissions of any air pollutant for which EPA has established a NAAQS, and the submission, upon request, of data related to such air quality modeling. EPA has published modeling guidelines at 40 CFR part 51, Appendix W, for predicting the effects of emissions of criteria pollutants on ambient air quality. EPA recommends in the 2013 guidance that, to meet section 110(a)(2)(K), a State submit or reference the statutory or regulatory provisions that provide the air agency with the authority to conduct such air quality modeling and to provide such modeling data to EPA upon request.

Massachusetts state law implicitly authorizes MassDEP to perform air quality modeling and provide such modeling data to EPA upon request. *See* M.G.L. c. 21A, section 2(2), (10), (22); M.G.L. c. 111, sections 142B–142D. In addition, 310 CMR 7.02 authorizes MassDEP to require air dispersion modeling analyses from certain sources and permit applicants. Massachusetts implements and enforces the federal PSD program through a delegation agreement (included in the docket for today's action) that requires MassDEP to follow the applicable procedures in EPA's permitting regulations at 40 CFR 52.21, as amended from time to time. The Commonwealth also collaborates with the Ozone Transport Commission (OTC), the Mid-Atlantic Regional Air Management Association, and EPA to perform large scale urban airshed modeling. EPA finds that Massachusetts meets the infrastructure SIP

requirements of section 110(a)(2)(K) for the 2015 ozone NAAQS.

L. Section 110(a)(2)(L)—Permitting Fees

This section requires SIPs to mandate that each major stationary source pay permitting fees to cover the costs of reviewing, approving, implementing, and enforcing a permit.

Massachusetts implements and operates the Title V permit program, which EPA approved on September 28, 2001. *See* 66 FR 49541. To gain approval, Massachusetts demonstrated, among other things, that it collects fees sufficient to cover the costs of reviewing and acting on Title V permit applications and implementing and enforcing the permits. *See* 61 FR 3827 (February 2, 1996); 40 CFR 70.9. Section 18 of M.G.L. c. 21A authorizes MassDEP to promulgate regulations establishing fees. To collect fees from sources of air emissions, the MassDEP promulgated and implements 310 CMR 4.00, *Timely Action Schedule and Fee Provisions.* These regulations set permit application and compliance fees for existing major sources and for new and modified major sources. EPA proposes that the Commonwealth meets the infrastructure SIP requirements of section 110(a)(2)(L) for the 2015 ozone NAAQS.

M. Section 110(a)(2)(M)—Consultation/Participation by Affected Local Entities

To satisfy element M, states must provide for consultation with, and allow participation by, local political subdivisions affected by the SIP. Pursuant to M.G.L. c. 111, section 142D, MassDEP must hold public hearings prior to revising its SIP. In addition, M.G.L. c. 30A, Massachusetts Administrative Procedures Act, requires MassDEP to provide notice and the opportunity for public comment and hearing prior to adoption of any regulation. Moreover, the Commonwealth's Executive Order No. 145 (discussed earlier in the context of element J) requires state agencies, including MassDEP, to provide notice to the Local Government Advisory Committee to solicit input on the impact of proposed regulations and other administrative actions on local governments. MassDEP's submittal also notes that the agency consults with local political subdivisions though a state ''SIP Steering Committee'' and conducts stakeholder outreach with local entities as a matter of policy when revising the SIP or adopting air regulations. Therefore, EPA proposes that Massachusetts meets the infrastructure SIP requirements of section 110(a)(2)(M) with respect to the 2015 ozone NAAQS.

III. Final Action

EPA is approving most portions of the Massachusetts infrastructure SIP requirements for the 2015 ozone NAAQS. We are also issuing a finding of failure to submit pertaining to the various aspects of infrastructure SIPS relating to the prevention of significant deterioration (PSD). The Commonwealth has long been subject to a Federal Implementation Plan (FIP) regarding PSD, thus the finding of failure to submit will result in no mandatory sanctions or further FIP requirements. This rulemaking also does not include any action on the interstate transport portion of the Commonwealth's submittal. This action is being taken in accordance with the Clean Air Act.

The EPA is publishing this action without prior proposal because the Agency views this as a noncontroversial amendment and anticipates no adverse comments. However, in the proposed rules section of this **Federal Register** publication, EPA is publishing a separate document that will serve as the proposal to approve the SIP revision should relevant adverse comments be filed. This rule will be effective May 11, 2020 without further notice unless the Agency receives relevant adverse comments by April 9, 2020.

If the EPA receives such comments, then EPA will publish a notice withdrawing the final rule and informing the public that the rule will not take effect. All public comments received will then be addressed in a subsequent final rule based on the proposed rule. The EPA will not institute a second comment period on the proposed rule. All parties interested in commenting on the proposed rule should do so at this time. If no such comments are received, the public is advised that this rule will be effective on May 11, 2020 and no further action will be taken on the proposed rule. Please note that if EPA receives adverse comment on an amendment, paragraph, or section of this rule and if that provision may be severed from the remainder of the rule, EPA may adopt as final those provisions of the rule that are not the subject of an adverse comment.

IV. Statutory and Executive Order Reviews

Under the Clean Air Act, the Administrator is required to approve a SIP submission that complies with the provisions of the Act and applicable Federal regulations. 42 U.S.C. 7410(k); 40 CFR 52.02(a). Thus, in reviewing SIP submissions, EPA's role is to approve state choices, provided that they meet the criteria of the Clean Air Act. Accordingly, this action merely approves state law as meeting Federal requirements and does not impose additional requirements beyond those imposed by state law. For that reason, this action:

- Is not a significant regulatory action subject to review by the Office of Management and Budget under Executive Orders 12866 (58 FR 51735, October 4, 1993) and 13563 (76 FR 3821, January 21, 2011);
- Is not an Executive Order 13771 regulatory action because this action is not significant under Executive Order 12866;
- Does not impose an information collection burden under the provisions of the Paperwork Reduction Act (44 U.S.C. 3501 *et seq.*);
- Is certified as not having a significant economic impact on a substantial number of small entities under the Regulatory Flexibility Act (5 U.S.C. 601 *et seq.*);
- Does not contain any unfunded mandate or significantly or uniquely affect small governments, as described in the Unfunded Mandates Reform Act of 1995 (Pub. L. 104–4);
- Does not have Federalism implications as specified in Executive Order 13132 (64 FR 43255, August 10, 1999);
- Is not an economically significant regulatory action based on health or safety risks subject to Executive Order 13045 (62 FR 19885, April 23, 1997);
- Is not a significant regulatory action subject to Executive Order 13211 (66 FR 28355, May 22, 2001);
- Is not subject to requirements of Section 12(d) of the National Technology Transfer and Advancement Act of 1995 (15 U.S.C. 272 note) because application of those requirements would be inconsistent with the Clean Air Act; and
- Does not provide EPA with the discretionary authority to address, as appropriate, disproportionate human health or environmental effects, using practicable and legally permissible methods, under Executive Order 12898 (59 FR 7629, February 16, 1994).

In addition, the SIP is not approved to apply on any Indian reservation land or in any other area where EPA or an Indian tribe has demonstrated that a tribe has jurisdiction. In those areas of Indian country, the rule does not have tribal implications and will not impose substantial direct costs on tribal governments or preempt tribal law as specified by Executive Order 13175 (65 FR 67249, November 9, 2000).

The Congressional Review Act, 5 U.S.C. 801 *et seq.,* as added by the Small Business Regulatory Enforcement Fairness Act of 1996, generally provides that before a rule may take effect, the agency promulgating the rule must submit a rule report, which includes a copy of the rule, to each House of the Congress and to the Comptroller General of the United States. EPA will submit a report containing this action and other required information to the U.S. Senate, the U.S. House of Representatives, and the Comptroller General of the United States prior to publication of the rule in the **Federal Register**. A major rule cannot take effect until 60 days after it is published in the **Federal Register**. This action is not a ''major rule'' as defined by 5 U.S.C. 804(2).

Under section 307(b)(1) of the Clean Air Act, petitions for judicial review of this action must be filed in the United States Court of Appeals for the appropriate circuit by May 11, 2020. Filing a petition for reconsideration by the Administrator of this final rule does not affect the finality of this action for the purposes of judicial review nor does it extend the time within which a petition for judicial review may be filed, and shall not postpone the effectiveness of such rule or action. Parties with objections to this direct final rule are encouraged to file a comment in response to the parallel notice of proposed rulemaking for this action published in the proposed rules section of today's **Federal Register**, rather than file an immediate petition for judicial review of this direct final rule, so that EPA can withdraw this direct final rule and address the comment in the proposed rulemaking. This action may not be challenged later in proceedings to enforce its requirements. (See section 307(b)(2).)

List of Subjects in 40 CFR Part 52

Environmental protection, Air pollution control, Incorporation by reference, Intergovernmental relations, Nitrogen dioxide, Ozone, Reporting and recordkeeping requirements, Volatile organic compounds.

Dated: February 11, 2020.

Dennis Deziel,

Regional Administrator, EPA Region 1.

Part 52 of chapter I, title 40 of the Code of Federal Regulations is amended as follows:

PART 52—APPROVAL AND PROMULGATION OF IMPLEMENTATION PLANS

■ 1. The authority citation for part 52 continues to read as follows:

Authority: 42 U.S.C. 7401 *et seq.*

Subpart W—Massachusetts

■ 2. In § 52.1120, in paragraph (e), amend the table by adding an entry for ''Infrastructure SIP for 2015 Ozone NAAQS'' at the end of the table to read as follows:

§ 52.1120 Identification of Plan

* * * * *

(e) * * *

MASSACHUSETTS NON-REGULATORY

Name of non regulatory SIP provision	Applicable geographic or nonattainment area	State submittal date/effective date	EPA approved date [3]	Explanations
*	*	*	* *	* *
Infrastructure SIP submittal for 2015 Ozone NAAQS.	Statewide	September 27, 2018.	3/10/2020 [Insert **Federal Register** citation].	Approved with respect to requirements for CAA section 110(a)(2) (A), (B), (C), (D), (E), (F), (G), (H), (J), (K), (L), and (M) with the exception of the PSD-related requirements of (C), (D), and (J).

[3] To determine the EPA effective date for a specific provision listed in this table, consult the **Federal Register** notice cited in this column for the particular provision.

[FR Doc. 2020–03203 Filed 3–9–20; 8:45 am]

BILLING CODE 6560–50–P

ENVIRONMENTAL PROTECTION AGENCY

40 CFR Part 52

[EPA–R04–OAR–2018–0792; FRL–10006–25–Region 4]

Air Plan Approval; AL; 2010 1-Hour SO_2 NAAQS Transport Infrastructure

AGENCY: Environmental Protection Agency (EPA).

ACTION: Final rule.

SUMMARY: The Environmental Protection Agency (EPA) is approving Alabama's August 20, 2018, State Implementation Plan (SIP) submission pertaining to the ''good neighbor'' provision of the Clean Air Act (CAA or Act) for the 2010 1-hour sulfur dioxide (SO_2) National Ambient Air Quality Standard (NAAQS). The good neighbor provision requires each state's implementation plan to address the interstate transport of air pollution in amounts that contribute significantly to nonattainment, or interfere with maintenance, of a NAAQS in any other state. In this action, EPA has determined that Alabama will not contribute significantly to nonattainment or interfere with maintenance of the 2010 1-hour SO_2 NAAQS in any other state. Therefore, EPA is approving the August 20, 2018, SIP revision as meeting the requirements of the good neighbor provision for the 2010 1-hour SO_2 NAAQS.

DATES: This rule will be effective April 9, 2020.

ADDRESSES: EPA has established a docket for this action under Docket Identification No. EPA–R04–OAR–2018–0792. All documents in the docket are listed on the *www.regulations.gov* website. Although listed in the index, some information may not be publicly available, *i.e.,* Confidential Business Information or other information whose disclosure is restricted by statute. Certain other material, such as copyrighted material, is not placed on the internet and will be publicly available only in hard copy form. Publicly available docket materials are available either electronically through *www.regulations.gov* or in hard copy at the Air Regulatory Management Section, Air Planning and Implementation Branch, Air and Radiation Division, U.S. Environmental Protection Agency, Region 4, 61 Forsyth Street SW, Atlanta, Georgia 30303–8960. EPA requests that if at all possible, you contact the person listed in the **FOR FURTHER INFORMATION**

CONTACT section to schedule your inspection. The Regional Office's official hours of business are Monday through Friday 8:30 a.m. to 4:30 p.m., excluding Federal holidays.

FOR FURTHER INFORMATION CONTACT: Michele Notarianni, Air Regulatory Management Section, Air Planning and Implementation Branch, Air and Radiation Division, U.S. Environmental Protection Agency, Region 4, 61 Forsyth Street SW, Atlanta, Georgia 30303–8960. Ms. Notarianni can be reached via phone number (404) 562–9031 or via electronic mail at *notarianni.michele@epa.gov*.

SUPPLEMENTARY INFORMATION:

I. Background

On June 2, 2010, EPA promulgated a revised primary SO_2 NAAQS with a level of 75 parts per billion (ppb), based on a 3-year average of the annual 99th percentile of 1-hour daily maximum concentrations. *See* 75 FR 35520 (June 22, 2010). Pursuant to section 110(a)(1) of the CAA, states are required to submit SIPs meeting the applicable requirements of section 110(a)(2) within three years after promulgation of a new or revised NAAQS or within such shorter period as EPA may prescribe. These SIPs, which EPA has historically referred to as ''infrastructure SIPs,'' are to provide for the ''implementation, maintenance, and enforcement'' of such NAAQS, and the requirements are designed to ensure that the structural components of each state's air quality management program are adequate to meet the state's responsibility under the CAA. Section 110(a) of the CAA requires states to make a SIP submission to EPA for a new or revised NAAQS, but the contents of individual state submissions may vary depending upon the facts and circumstances. The content of the changes in such SIP submissions may also vary depending upon what provisions the state's approved SIP already contains. Section 110(a)(2) requires states to address basic SIP elements such as requirements for monitoring, basic program requirements, and legal authority that are designed to assure attainment and maintenance of the NAAQS.

Section 110(a)(2)(D)(i)(I) of the CAA requires SIPs to include provisions prohibiting any source or other type of emissions activity in one state from emitting any air pollutant in amounts that will contribute significantly to nonattainment, or interfere with maintenance, of the NAAQS in another state. The two clauses of this section are referred to as prong 1 (significant contribution to nonattainment) and prong 2 (interference with maintenance of the NAAQS).

Through a letter dated August 20, 2018,[1] the Alabama Department of Environmental Management (ADEM) submitted a revision to the Alabama SIP addressing prongs 1 and 2 of CAA section 110(a)(2)(D)(i)(I) for the 2010 1-hour SO_2 NAAQS. EPA is approving ADEM's August 20, 2018, SIP submission because the State demonstrated that Alabama will not contribute significantly to nonattainment, or interfere with maintenance, of the 2010 1-hour SO_2 NAAQS in any other state. All other elements related to the infrastructure requirements of section 110(a)(2) for the 2010 1-hour SO_2 NAAQS for Alabama are addressed in separate rulemakings.[2]

In a notice of proposed rulemaking (NPRM) published on December 31, 2019 (84 FR 72278), EPA proposed to approve Alabama's August 20, 2018, SIP revision for the 2010 1-hour SO_2 NAAQS. The details of the SIP revision and the rationale for EPA's action is explained in the NPRM. Comments on the proposed rulemaking were due on or before January 30, 2020. EPA received two sets of adverse comments from anonymous commenters (collectively referred to as the ''Commenter''). These comments are included in the docket for this final action. EPA has summarized the comments and provided responses below.

II. Response to Comments

Comment 1: The Commenter states that EPA has not demonstrated that Alabama will not contribute significantly to nonattainment or interfere with maintenance of the 2010 1-hour SO_2 NAAQS in any other state. The Commenter claims this is ''best evidenced'' in Escambia County, Alabama, and disputes EPA's proposed finding in the NPRM that no further analysis is necessary for assessing the potential impacts of the interstate transport of SO_2 emissions from Escambia Operating Company—Big Escambia Creek Plant (Big Escambia). The Commenter asserts that there are gaps in EPA's analysis, and as summarized below, raises specific concerns regarding several aspects of the analysis of Big Escambia as it relates to interstate transport of SO_2 emissions.

Comment 1.a: The Commenter notes that EPA identified Georgia-Pacific's Brewton LLC facility (Brewton) as a possible contributor to modeled violations but that the facility was not included in the Big Escambia modeling for EPA's Data Requirements Rule (DRR). The Commenter asserts that the decrease in SO_2 emissions from Brewton from 2014 to 2017 (972 tons to 103 tons) identified in the NPRM's Technical Support Document (TSD) ''does not unequivocally mean that there is no transport of SO_2 (or causation or contribution to nonattainment)'' in Florida. The Commenter claims that EPA's belief that excluding Brewton from the model does not invalidate the model and does not answer the question as to whether there is transport from the facility, and that EPA should offer some weight of evidence (WOE), model Brewton, or ask the State to model Brewton, in order to demonstrate no transport of SO_2 emissions from Brewton into the neighboring state of Florida.

Comment 1.b: The Commenter further indicates a concern with the lack of modeling of certain emissions from the Big Escambia facility. The Commenter notes that EPA's TSD indicates the fact that the difference in the lower modeled emissions and the higher reported emissions at Big Escambia (a difference of 1,575.6 tons in 2014) is due to emissions being diverted to a flare at the facility. The Commenter states that EPA did not consider the emission release characteristics and asserts that EPA's estimate of what the unmodeled concentrations would be in Florida from the flare is therefore ''unsubstantiated.'' The Commenter also notes that EPA assumed that the increase in concentrations from the flare would increase overall concentrations at Big Escambia by 50 percent (%) and argues that ''some explanation of how the emissions from the flare are released and where the maximum impacts will occur is necessary instead of just adding 50% to highest modeled impact from the source based on emissions changes alone'' because ''[e]missions changes alone are not directly proportional to modeled impacts.''

Comment 1.c: The Commenter notes that, although the Big Escambia DRR modeling receptor grid extended into Florida, the grid did not extend 13 kilometers (km) into Florida, which the Commenter asserts is the approximate distance from the Florida border to Breitburn Operating, L.P. (Breitburn), a source located in Florida. The Commenter therefore asserts that there is ''an unmodeled area in Florida for which we don't know the air quality impacts.'' The Commenter further states that given the maximum reported SO_2 concentration (58.8 ppb) from the Big

[1] EPA received ADEM's August 20, 2018, SIP submission on August 27, 2018.

[2] EPA acted on all other infrastructure elements for the 2010 1-hour SO_2 NAAQS for Alabama on January 12, 2017 (82 FR 3637), October 12, 2017 (82 FR 47393), and July 6, 2018 (83 FR 31454).

Escambia modeling, the 1,575.6 unmodeled tons of SO_2 from the flare at Big Escambia, and the unmodeled space between Breitburn and the Alabama/Florida border, EPA's conclusion that sources in Alabama will not contribute significantly to nonattainment or interfere with maintenance of the NAAQS in any other state is ''off base.'' The Commenter claims that EPA should either ask the State to ''properly model'' Big Escambia with the flare emissions and the entire land area between the Alabama and Florida sources included or EPA should rerun the modeling.

Comment 1.d: The Commenter states that EPA often responds to comments such as this by saying that the Commenter has not provided evidence indicating a contribution to nonattainment or interference with maintenance and standing by its conclusions. The Commenter argues that private citizens and organizations do not have the expertise or resources to perform the necessary modeling to provide definitive answers like EPA does, and asks why EPA doesn't run the modeling for Big Escambia properly ''instead of making unsubstantiated technical assumptions that run counter to why modeling is used in the first place.''

Response 1: EPA disagrees with the Commenter's claim that EPA has not demonstrated that Alabama will not contribute significantly to nonattainment or interfere with maintenance of the 2010 1-hour SO_2 NAAQS in any other state and responds to the Commenter's specific concerns below.

Response 1.a: Regarding the Commenter's concerns with EPA's analysis for Brewton, EPA continues to believe that the exclusion of Brewton from the DRR modeling for Big Escambia does not render the model invalid for use in assessing interstate transport of SO_2 into the neighboring state of Florida. EPA did not rely on the modeling alone in drawing the conclusion that, based on the information available, sources in Alabama will not significantly contribute to nonattainment or interfere with maintenance in other states. Rather, EPA considered additional WOE factors to evaluate potential impacts of Alabama sources on air quality in other states.

Relevant to the Commenter's contention, EPA considered the fact that SO_2 emissions at Brewton in 2017 were 103 tons and that the distance between Brewton and Big Escambia is approximately 24 km. EPA therefore determined that it was not necessary for this source to be included in the modeling because it is unlikely to interact with the emissions from Big Escambia.[3] Since publication of the NPRM, EPA evaluated more recent emissions data from EPA's Emissions Inventory System which indicates that Brewton emitted 27 tons of SO_2 in 2018.[4] A source with this magnitude of emissions is unlikely to contribute to an air quality problem in Florida, regardless of Big Escambia's impact in the State. Further, with respect to the significant decrease in emissions of SO_2 since 2017, seven units at the facility (three recovery furnace units, three smelt dissolving tank units, and one package boiler unit) have permanently shut down as requested in the title V permit renewal application submitted by Brewton in June of 2017.[5] In addition, the No. 2 Power Boiler, rated at 323 million British thermal units per hour, is currently capable of burning natural gas only.[6] These recent changes at the facility indicate that emissions from Brewton are likely to remain low in the future.

Thus, the WOE available regarding Brewton indicates that it will not contribute significantly to nonattainment or interfere with maintenance in any other state, and the Commenter has not provided any information to contradict EPA's determination. Therefore, EPA continues to believe that the exclusion of Brewton from Big Escambia's modeling is not problematic as it relates to an evaluation of the interstate transport of SO_2 emissions into Florida, and this modeling, weighed along with other WOE factors described in the NPRM, supports EPA's conclusion that Alabama has satisfied the good neighbor provision for the 2010 1-hour SO_2 NAAQS.

Response 1.b: Regarding the Commenter's statements about emissions from the Big Escambia flare,[7] the release characteristics of the flare, specifically the tall stack height (42 meters), the exit velocity (20 meters/second), and the high stack temperature (1,273 degrees Kelvin), make it likely that the emissions released from the flare would be highly dispersive and therefore concentrations would likely be well below the 2010 1-hour SO_2 NAAQS at the 8 km distance to the Florida border.

A comparison of the flare characteristics to other modeled sources at Big Escambia, as well as the location of the modeled design concentration and the concentration gradient, also support EPA's conclusion. A comparable source, the sulfur recovery unit (incinerator—Source ID S1201), with a stack height of 66 meters, an exit velocity of 50 meters/second, and a stack temperature of 617 degrees Kelvin is the primary source of emissions at Big Escambia. In ADEM's modeling, emissions from the incinerator were varied hourly having a rate greater than or equal to one-half of a ton per hour for 30 percent of the hours and a maximum hourly rate of 3.7 tons per hour. Given the similarities in the characteristics of the flare to that of the incinerator, the dispersion characteristics of the plume from the flare are likewise expected to be very similar to those of the plume from the incinerator with regard to modeled concentrations and concentration gradient.

The area of maximum modeled concentrations is bimodal, *i.e.,* with two areas of high concentrations located in different directions from Big Escambia. The modeled design concentration is actually located at the northwestern fenceline of the Big Escambia facility. There is a secondary area of high concentrations at the southern fenceline. In both regions, the maximum concentrations are located within a distance of only 600–700 meters of the incinerator, the primary SO_2 source, with a steep concentration gradient of decreasing concentrations occurring within the first kilometer beyond the fenceline. The flare is located on the northern side of the facility, about 250 meters northeast of the incinerator, and is almost 1 km from the secondary area of maximum modeled concentrations near the southern fenceline, toward the Florida border. Given the location of the

[3] EPA performed a qualitative evaluation to assess whether SO_2 emissions from Brewton are impacting Florida, the only neighboring state within 50 km of this source. Because EPA does not have monitoring or modeling data for Brewton, EPA evaluated its 2017 SO_2 emissions, distance from the Alabama border, and distances from sources in Florida with SO_2 emissions greater than 100 tons in 2017 and not subject to EPA's DRR as summarized in Table 5 of the NPRM.

[4] Brewton is located approximately 8 km from the Alabama/Florida border.

[5] In an email dated February 24, 2020, ADEM provided an excerpt from Brewton's June 2017 title V permit renewal application requesting the permanent shutdown of seven units at the facility. These seven units are no longer included in Brewton's title V permit issued on January 17, 2018. The February 24, 2020, email, June 2017 renewal application excerpt, and the title V permit are included in the docket for this action.

[6] The Statement of Basis for the draft permit for Brewton (A530001) title V significant modification dated November 7, 2016, documenting ADEM's approval of the removal of all fuel burning equipment at Power Boiler No. 2, is included in the docket for this action.

[7] Alabama provided documentation on December 2, 2019, that indicated the discrepancy in emissions for each of the modeled years was due to acid gas being diverted to a flare, unit FL–02, when the sulfur recovery unit was down during startup, shutdown, malfunction or upset events.

flare relative to the incinerator and the distance of the flare to the southern Big Escambia fenceline, additional emissions from the flare would not be expected to have a significant impact on modeled concentrations at the Alabama/Florida border. Based on EPA's analysis of the similar emissions from the incinerator, EPA continues to believe that the unmodeled SO_2 emissions from the flare would not result in a significant concentration gradient in Florida. In other words, the nature of the flare and the distance from Big Escambia to the Florida border make it highly unlikely that the additional emissions from the flare (stated by Alabama to be due to startup, shutdown, malfunction and upset conditions), had they been included in the model, would have increased modeled concentrations in Florida to a level above the 2010 1-hour SO_2 NAAQS.

Response 1.c: EPA disagrees with the Commenter's assertion that the receptor grid needs to be expanded before EPA can approve Alabama's SIP submittal as meeting the CAA's good neighbor provision. As part of its WOE analysis, EPA evaluated the issues with the original DRR modeling for Big Escambia [8] and how ADEM addressed them for the purpose of assessing interstate transport of SO_2. In particular, ADEM provided supplemental information pertaining to Big Escambia's DRR modeling intended to address the issues identified with the original modeling for the purpose of evaluating potential ambient air impacts in the neighboring state of Florida (''Big Escambia Supplement'').[9] With respect to Breitburn, the Big Escambia modeling included Breitburn at allowable emissions, a level 6.4 times higher than actual emissions in 2017, indicating that ADEM's assessment of Breitburn's impact within the modeling grid was conservative. Additionally, the most recent actual emissions available for the Big Escambia facility in EPA's Emissions Inventory System database were 2,990 tons/year in 2018. This level is more than 500 tons/year less than the Big Escambia emissions that were modeled during 2013–2015 timeframe, which also adds to the conservatism of the modeling. Although the modeling grid did not cover Breitburn, a portion of the modeling grid did extend into Florida and therefore assessed the potential impacts of Breitburn and Big Escambia within that portion of the State.[10] That analysis showed that the maximum modeled impact in Florida remained below the level of the 2010 1-hour SO_2 NAAQS.

While, as discussed above in response to Comment 1.b, the Big Escambia modeling did not include all emissions from the flare, the inclusion of Breitburn at its allowable emission levels indicates that air quality at the Alabama/Florida border is likely characterized conservatively. Moreover, given the response to Comment 1.b above regarding the locations of the areas of maximum modeled concentrations in Alabama, their close proximity to the modeled emission sources at Big Escambia, and the nature of the concentration gradients near Big Escambia, EPA further concludes that it is unlikely that there is a violation of the 2010 1-hour SO_2 NAAQS located in the portions of Florida that extend outside of the receptor grid where emissions from Big Escambia may have an impact. EPA continues to believe that the Big Escambia DRR modeling and Supplement provide a conservative estimation of potential SO_2 impacts in Florida and Big Escambia's lack of significant contribution to impacts in Florida when the factors discussed in the NPRM and associated TSD are weighed together.

While EPA acknowledges that the modeling grid does not address all potential impacts within Florida from the Breitburn and Big Escambia emissions, in the absence of any information demonstrating a potential violation in Florida, EPA continues to believe that the WOE analysis provided in the NPRM is adequate to determine the potential downwind impact from Alabama to neighboring states. EPA's WOE analysis includes the following factors: (1) Potential ambient air quality impacts of SO_2 emissions from certain facilities in Alabama on neighboring states based on available air dispersion modeling results; (2) SO_2 emissions from Alabama sources; (3) SO_2 ambient air quality for Alabama and neighboring states; (4) SIP-approved Alabama regulations that address SO_2 emissions; and (5) Federal regulations that reduce SO_2 emissions at Alabama sources. This information, when weighed together, does not provide any indication of an air quality problem in Florida due to emissions from Alabama sources with respect to the 2010 1-hour SO_2 NAAQS and instead supports EPA's conclusion that, based on the available information, Alabama will not significantly contribute to nonattainment or interfere with maintenance of the standard in other states.

Response 1.d: Regarding the Commenter's suggestion that EPA should rely on its own resources and expertise to model whether or not Alabama sources in Escambia County significantly contribute to nonattainment or interfere with maintenance in Florida, EPA does not believe the uncertainties of the modeling performed by Alabama identified in the NPRM invalidate consideration of the modeling for transport purposes as part of a WOE analysis. EPA does not believe that modeling is required in all cases under CAA section 110(a)(2)(D)(i)(I) to evaluate good neighbor obligations, particularly where other available information can be used to qualitatively and quantitatively assess the potential for downwind impacts from upwind state emission sources. Here, EPA has evaluated a number of different factors in a WOE analysis based on available information and found no basis to conclude that Alabama emissions will have an adverse impact on downwind states in violation of the good neighbor provision. Therefore, as stated in our response to Comment 1.c, EPA continues to believe that the WOE analysis provided in the NPRM is adequate to determine the potential

[8] EPA identified issues with Big Escambia's DRR modeling in EPA's proposed and final TSDs for Alabama for designations under the 2010 1-hour SO_2 NAAQS at: *https://www.epa.gov/sites/production/files/2017-08/documents/3_al_so2_rd3-final.pdf* (see pp. 90–92, 93–95) and *https://www.epa.gov/sites/production/files/2017-12/documents/03-al-so2-rd3-final.pdf* (see p. 26). The TSD to the NPRM is limited to an assessment of Big Escambia's DRR modeling in relation to the interstate transport of SO_2 (*i.e.,* whether Alabama's SO_2 emissions will contribute significantly to nonattainment or interfere with maintenance of the 2010 1-hour SO_2 NAAQS in neighboring states). The TSD does not address designations of the 2010 1-hour SO_2 NAAQS nor does it reopen any designations.

[9] The Big Escambia Supplement files submitted by ADEM in separate correspondence to EPA dated September 5, 2019, September 20, 2019, September 25, 2019, December 2, 2019, and December 6, 2019, are included in the docket for this final action at *www.regulations.gov* at Docket ID No. EPA–R04–OAR–2018–0792, with the exception of certain files due to their nature and size and incompatibility with the Federal Docket Management System. These files are available at the EPA Region 4 office for review. To request these files, please contact the person listed in the notice associated with this TSD under the section titled **FOR FURTHER INFORMATION CONTACT**.

[10] The Commenter incorrectly asserts that the distance from Breitburn to the Alabama/Florida border is 13 km. Breitburn is located 4 km due south of the border but is located 21 km Southeast of Big Escambia. Big Escambia is located 8 km due north of the border. Therefore, the distance between the sources and the borders are not directly linear as the Commenter asserts. The Big Escambia modeling grid extends 15 km from Big Escambia in all directions and approximately 7 km into Florida in the direction due south of Big Escambia but does not cover the Breitburn facility itself. EPA does not believe this invalidates the Big Escambia modeling for purposes of assessing transport into Florida as explained in the NPRM and associated TSD and this final rule.

downwind impact from Alabama to neighboring states.

III. Final Action

EPA is approving Alabama's August 20, 2018, SIP submission as demonstrating that emissions from Alabama will not contribute significantly to nonattainment or interfere with maintenance of the 2010 1-hour SO_2 NAAQS in another state.

IV. Statutory and Executive Order Reviews

Under the CAA, the Administrator is required to approve a SIP submission that complies with the provisions of the Act and applicable Federal regulations. *See* 42 U.S.C. 7410(k); 40 CFR 52.02(a). Thus, in reviewing SIP submissions, EPA's role is to approve state choices, provided that they meet the criteria of the CAA. This action merely approves state law as meeting Federal requirements and does not impose additional requirements beyond those imposed by state law. For that reason, this action:

- Is not a significant regulatory action subject to review by the Office of Management and Budget under Executive Orders 12866 (58 FR 51735, October 4, 1993) and 13563 (76 FR 3821, January 21, 2011);
- Is not an Executive Order 13771 (82 FR 9339, February 2, 2017) regulatory action because SIP approvals are exempted under Executive Order 12866;
- Does not impose an information collection burden under the provisions of the Paperwork Reduction Act (44 U.S.C. 3501 *et seq.*);
- Is certified as not having a significant economic impact on a substantial number of small entities under the Regulatory Flexibility Act (5 U.S.C. 601 *et seq.*);
- Does not contain any unfunded mandate or significantly or uniquely affect small governments, as described in the Unfunded Mandates Reform Act of 1995 (Pub. L. 104–4);
- Does not have federalism implications as specified in Executive Order 13132 (64 FR 43255, August 10, 1999);
- Is not an economically significant regulatory action based on health or safety risks subject to Executive Order 13045 (62 FR 19885, April 23, 1997);
- Is not a significant regulatory action subject to Executive Order 13211 (66 FR 28355, May 22, 2001);
- Is not subject to requirements of Section 12(d) of the National Technology Transfer and Advancement Act of 1995 (15 U.S.C. 272 note) because application of those requirements would be inconsistent with the CAA; and
- Does not provide EPA with the discretionary authority to address, as appropriate, disproportionate human health or environmental effects, using practicable and legally permissible methods, under Executive Order 12898 (59 FR 7629, February 16, 1994).

The SIP is not approved to apply on any Indian reservation land or in any other area where EPA or an Indian tribe has demonstrated that a tribe has jurisdiction. In those areas of Indian country, the rule does not have tribal implications as specified by Executive Order 13175 (65 FR 67249, November 9, 2000), nor will it impose substantial direct costs on tribal governments or preempt tribal law.

The Congressional Review Act, 5 U.S.C. 801 *et seq.,* as added by the Small Business Regulatory Enforcement Fairness Act of 1996, generally provides that before a rule may take effect, the agency promulgating the rule must submit a rule report, which includes a copy of the rule, to each House of the Congress and to the Comptroller General of the United States. EPA will submit a report containing this action and other required information to the U.S. Senate, the U.S. House of Representatives, and the Comptroller General of the United States prior to publication of the rule in the **Federal Register**. A major rule cannot take effect until 60 days after it is published in the **Federal Register**. This action is not a ''major rule'' as defined by 5 U.S.C. 804(2).

Under section 307(b)(1) of the CAA, petitions for judicial review of this action must be filed in the United States Court of Appeals for the appropriate circuit by May 11, 2020 Filing a petition for reconsideration by the Administrator of this final rule does not affect the finality of this action for the purposes of judicial review nor does it extend the time within which a petition for judicial review may be filed, and shall not postpone the effectiveness of such rule or action. This action may not be challenged later in proceedings to enforce its requirements. *See* section 307(b)(2).

List of Subjects in 40 CFR Part 52

Environmental protection, Air pollution control, Incorporation by reference, Intergovernmental relations, Particulate matter, Reporting and recordkeeping requirements, Sulfur oxides.

Dated: February 27, 2020.

Mary S. Walker,

Regional Administrator, Region 4.

For the reasons set out in the preamble, 40 CFR part 52 is amended as follows:

PART 52—APPROVAL AND PROMULGATION OF IMPLEMENTATION PLANS

■ 1. The authority citation for part 52 continues to read as follows:

Authority: 42 U.S.C. 7401 *et seq.*

Subpart B—Alabama

■ 2. Section 52.50(e) is amended by adding an entry for ''110(a)(1) and (2) Infrastructure Requirements for the 2010 1-hour SO_2 NAAQS'' at the end of the table to read as follows:

§ 52.50 Identification of plan.

* * * * *

(e) * * *

EPA APPROVED ALABAMA NON-REGULATORY PROVISIONS

Name of nonregulatory SIP provision	Applicable geographic or nonattainment area	State submittal date/effective date	EPA approval date	Explanation
*	*	*	*	*
110(a)(1) and (2) Infrastructure Requirements for the 2010 1-hour SO_2 NAAQS.	Alabama	8/20/2018	3/10/2020, [Insert citation of publication].	Addressing Prongs 1 and 2 of section 110(a)(2)(D)(i) only.

[FR Doc. 2020–04656 Filed 3–9–20; 8:45 am]

BILLING CODE 6560–50–P

ENVIRONMENTAL PROTECTION AGENCY

40 CFR Part 725

[EPA–HQ–OPPT–2011–0740; FRL–9991–60]

RIN 2070–AJ65

Microorganisms; General Exemptions From Reporting Requirements; Revisions to Recipient Organisms Eligible for Tier I and Tier II Exemptions

AGENCY: Environmental Protection Agency (EPA).

ACTION: Final rule.

SUMMARY: EPA is issuing a final rule to add *Trichoderma reesei* (*T. reesei*) strain QM6a and its derivatives and *Bacillus amyloliquefaciens* (*B. amyloliquefaciens*) subspecies (subsp.) *amyloliquefaciens* to the list of recipient microorganisms that may be used to qualify for the Tier I and Tier II exemptions from full notification and reporting procedures under the Toxic Substances Control Act (TSCA) for new microorganisms that are being manufactured for introduction into commerce. EPA received petitions to add *T. reesei* and *B. amyloliquefaciens* to the list of microorganisms eligible for the exemption from full notification and reporting procedures under the TSCA for new microorganisms. Based on EPA's evaluation of these petitions, EPA has made the determination that certain strains of both microorganisms will not present an unreasonable risk of injury to health or the environment when used as a recipient microorganism provided that certain criteria for the introduced genetic material and the physical containment conditions are met.

DATES: This final rule is effective April 9, 2020.

ADDRESSES: The docket for this action, identified by docket identification (ID) number EPA–HQ–OPPT–2011–0740, is available at *http://www.regulations.gov* or at the Office of Pollution Prevention and Toxics Docket (OPPT Docket), Environmental Protection Agency Docket Center (EPA/DC), West William Jefferson Clinton Bldg., Rm. 3334, 1301 Constitution Ave. NW, Washington, DC. The Public Reading Room is open from 8:30 a.m. to 4:30 p.m., Monday through Friday, excluding legal holidays. The telephone number for the Public Reading Room is (202) 566–1744, and the telephone number for the OPPT Docket is (202) 566–0280. Please review the visitor instructions and additional information about the docket available at *http://www.epa.gov/dockets.*

FOR FURTHER INFORMATION CONTACT:

For technical information contact: Rebecca Edelstein, Chemical Control Division (7405M), Office of Pollution Prevention and Toxics, Environmental Protection Agency, 1200 Pennsylvania Ave. NW, Washington, DC 20460–0001; telephone number: (202) 564–1667; email address: *edelstein.rebecca@epa.gov.*

For general information contact: The TSCA-Hotline, ABVI-Goodwill, 422 South Clinton Ave., Rochester, NY 14620; telephone number: (202) 554–1404; email address: *TSCA-Hotline@epa.gov.*

SUPPLEMENTARY INFORMATION:

I. Executive Summary

A. Does this action apply to me?

You may be potentially affected by this action if you produce, import, process, or use either intergeneric *T. reesei* or intergeneric *B. amyloliquefaciens* or any other eligible recipient microorganisms listed in 40 CFR 725.420. The following list of North American Industrial Classification System (NAICS) codes is not intended to be exhaustive, but rather provides a guide to help readers determine whether this document applies to them. Potentially affected entities may include:

- Basic Chemical Manufacturing (NAICS code 3251).
- Pesticide, Fertilizer and other Agricultural Chemical manufacturing (NAICS code 3253).
- Other Chemical Product and Preparation Manufacturing (NAICS code 3259).

If you have any questions regarding the applicability of this action to a particular entity, consult the technical person listed under **FOR FURTHER INFORMATION CONTACT**.

B. What is the Agency's authority for taking this action?

This action is being taken under the authority of TSCA section 5(h)(4) (15 U.S.C. 2604(h)(4)). TSCA section 5(a)(1) requires that persons notify EPA at least 90 days before they manufacture (the term ''manufacture'' includes import under TSCA) for commercial purposes a ''new'' chemical substance, or manufacture (including import) or process a chemical substance for a ''significant new use'' (15 U.S.C. 2604(a)(1)(B)(i)). TSCA furthermore prohibits such manufacturing or processing from commencing until EPA has conducted a review of the notice, made an appropriate determination on the notice, and taken such actions as are required in association with that determination (15 U.S.C. 2604(a)(1)(B)(ii)). TSCA defines ''chemical substance'' broadly and in terms that cover intergeneric microorganisms as well as traditional chemical substances. Therefore, for the purposes of TSCA, a ''new microorganism'' is one that is not listed on the TSCA Chemical Substances Inventory (TSCA Inventory) compiled under TSCA section 8(b).

TSCA section 5(h)(4) authorizes EPA, upon application and by rule, to exempt the manufacturer of any new chemical substance from part or all of the provisions of TSCA section 5, if EPA determines that the manufacture, processing, distribution in commerce, use, or disposal of the new chemical substance will not present an unreasonable risk of injury to human health or the environment, including an unreasonable risk to a potentially exposed or susceptible subpopulation identified by the Administrator under the conditions of use.

C. What action is the Agency taking?

In 2012, EPA proposed to add *T. reesei* strain QM6a and its derivatives (hereafter, *T. reesei* QM6a) and *B. amyloliquefaciens* subspecies (subsp.) *amyloliquefaciens* to the list of recipient microorganisms in 40 CFR 725.420 that may be used to qualify for Tier I and Tier II exemptions from full notification and reporting procedures under TSCA for new microorganisms that are being manufactured into commerce. EPA is finalizing the proposal.

D. Why is the Agency taking this action?

EPA received petitions to add *T. reesei* and *B. amyloliquefaciens* to the list of microorganisms that may be used as recipient microorganisms in order to qualify for the exemption from full notification and reporting procedures under TSCA for new microorganisms that are being manufactured for introduction into commerce. EPA proposed to add certain strains of these two microorganisms to the list of recipient microorganisms based on EPA's preliminary determination. EPA is now issuing a final rule that incorporates certain changes in response to public comment.

E. What are the estimated incremental impacts of this final rule?

EPA has evaluated the potential costs of the addition of the two microorganisms to the list of recipient microorganisms eligible for Tier I and Tier II exemptions. The final rule is

expected to generate cost savings for organizations that, in the absence of the rule, would submit Microbial Commercial Activity Notices (MCANs) for new intergeneric *T. reesei* or *B. amyloliquefaciens* strains. The rule will result in costs savings for both the industry and the Agency. EPA estimates the annualized industry savings of the rule to be approximately $260,000 per year over a ten-year period, with a 3 percent discount rate, and $252,000 per year with a 7 percent discount rate. Annualized agency savings are approximately $178,000 per year with a 3 percent discount rate and $173,000 per year with a 7 percent discount rate over the ten-year period, for a total annualized savings to society of approximately $438,000 per year with a 3 percent discount rate and $424,000 per year with a 7 percent discount rate. The economic analysis is available in the docket and is summarized in Unit IX. of this final rule. Costs and benefits of adding *T. reesei* QM6a and *B. amyloliquefaciens* subsp. *amyloliquefaciens* to 40 CFR 725.420 are also discussed in Unit VIII.C.2. through 4.

II. Background

EPA received petitions to add *T. reesei* and *B. amyloliquefaciens* to the list of recipient microorganisms at 40 CFR 725.420 that are eligible for the regulatory exemptions applicable to new microorganisms that are manufactured for introduction into commerce (Refs. 1–3). In the **Federal Register** of September 5, 2012 (77 FR 54499) (FRL–9348–1) (''2012 Proposed Rule'') (Ref. 4), the Agency proposed to add certain strains of these two microorganisms to the list of recipient microorganisms at 40 CFR 725.420 based on EPA's preliminary determination that both of the microorganisms, with certain limitations, meet the criteria for addition to the list—*i.e.,* they will not present an unreasonable risk of injury to health or the environment provided that the other conditions of the exemptions at 40 CFR part 725, subpart G, relating to the introduced genetic material, and the physical containment of the new microorganisms, have been met. EPA is now issuing a final rule that incorporates certain changes made in response to public comments received on the 2012 Proposed Rule. These changes are described in the following paragraphs.

In the 2012 Proposed Rule, EPA proposed to restrict the exemption for *T. reesei* to the *T. reesei* strain QM6a and its derivatives. In addition, EPA proposed to restrict the *T. reesei* QM6a exemption to use of the microorganism only under submerged standard industrial fermentation operations used for enzyme production; as described in this proposed rule, these conditions are typical throughout the fermentation industry and meet the existing physical containment and control requirements for the tiered exemptions under 40 CFR 725.422. Any subsequent deliberate fermentation of solid plant material or insoluble substrates with *T. reesei* QM6a and its derivatives as defined at 40 CFR 725.3 could only be initiated after inactivation of the viable *T. reesei* cells as delineated in 40 CFR 725.422(d), *i.e.,* by a procedure that has been demonstrated and documented to be effective in reducing the viable microbial population by at least 6 logs (*i.e.,* six orders of magnitude).

In addition, EPA proposed to limit the exemption for *B. amyloliquefaciens* to only strains of *B. amyloliquefaciens* that would fall under the subspecies *B. amyloliquefaciens amyloliquefaciens.*

In response to comments received on its original proposal, EPA has modified the regulatory text in 40 CFR 725.3 and 725.420 slightly to better clarify EPA's original intent. These revisions to the regulatory text in 40 CFR 725.3 and 725.420 merely represent a clarification of the original proposal.

Existing regulatory requirements and exemptions for intergeneric microorganisms are discussed in Unit III. of this proposed rule. EPA's response to public comments received on the 2012 Proposed Rule are provided in Unit IV. Unit V. provides EPA's evaluation of available information on *T. reesei* and *B. amyloliquefaciens* for the criteria delineated in 40 CFR 725.67. Physical containment and control technologies as well as release and exposure assessments for the two microorganisms are discussed in Unit VI. EPA's risk assessments for *T. reesei* QM6a and *B. amyloliquefaciens* subsp. *amyloliquefaciens* are summarized in Unit VII., and EPA's rationale for adding the two microorganisms to the list of recipients eligible for exemption is discussed in Unit VIII. EPA's Risk Assessment documents (Refs. 5 and 6), available in the public docket, provide more detailed information, and supporting references, for EPA's evaluation of the available information and the potential risks to health and the environment.

III. Existing EPA Regulatory Requirements and Exemption Standard

Manufacturers are required to report certain information to EPA 90 days before commencing the manufacture of intergeneric microorganisms that are not listed on the TSCA Inventory. EPA regulations at 40 CFR part 725 establish the mechanisms for reporting this information. TSCA prohibits such manufacturing or processing from commencing until EPA has conducted a review of the notice, made an appropriate determination on the notice, and taken such actions as are required in association with that determination (15 U.S.C. 2604(a)(1)(B)(ii)).

Any manufacturer of a living intergeneric microorganism who is required to report under TSCA section 5 must file a MCAN with EPA, unless the activity is eligible for one of the specific exemptions. Section 5(h)(4) authorizes EPA, by rule and upon request, to exempt manufacturers from these requirements if the Administrator determines that the manufacture, processing, distribution in commerce, use or disposal of the chemical substance ''will not present an unreasonable risk of injury to health or the environment, including an unreasonable risk to a potentially exposed or susceptible subpopulation identified by the Administrator under the conditions of use.'' TSCA section 3(4) defines ''conditions of use'' to mean ''the circumstances, as determined by the Administrator, under which a chemical substance is intended, known or reasonably foreseen to be manufactured, processed, distributed in commerce, used, or disposed of.'' TSCA section 3(12) defines ''potentially exposed or susceptible subpopulation'' to mean ''a group of individuals within the general population. . .who, due to either greater susceptibility or greater exposure, may be at greater risk than the general population of adverse health effects from exposure to a chemical substance or mixture, such as infants, children, pregnant women, workers, or the elderly.'' 15 U.S.C. 2601 *et seq.* The general procedures for filing MCANs are described in 40 CFR part 725, subpart B.

EPA regulations establish two exemptions for new microorganisms, after the research and development stage, which are being manufactured for introduction into commerce: Tier I and Tier II exemptions.

Under the Tier I exemption, if certain criteria are met, manufacturers are required to notify EPA 10 days prior to manufacturing a new microorganism that qualifies for this exemption, and to keep certain records. 40 CFR 725.400. To qualify for the Tier I exemption, a manufacturer must use one of the recipient organisms listed in 40 CFR 725.420, and must implement specific physical containment and control technologies listed in 40 CFR 725.422. In addition, the genetic material

introduced into the recipient microorganism must be well-characterized, limited in size, poorly mobilizable, and free of certain sequences. 40 CFR 725.421.

A manufacturer who meets the conditions of the Tier I exemption may modify the specified containment restrictions or level of inactivation but must submit a Tier II exemption notification 40 CFR 725.428. The Tier II exemption requires manufacturers to submit an abbreviated notification describing the modified containment and provides for a 45-day period during which EPA would review the proposed containment. 40 CFR 725.450 and 725.470. The manufacturer may not proceed under this exemption until EPA approves the exemption. 40 CFR 725.470.

EPA established a petition process at 40 CFR 725.67 for the public to propose additional microorganisms for the tiered exemptions. EPA's regulations at 40 CFR 725.67 direct petitioners to submit information to demonstrate that the activities affected by the requested exemption meet the requirements of TSCA section 5(h)(4), *i.e.* ''will not present an unreasonable risk of injury to health or the environment, including an unreasonable risk to a potentially exposed or susceptible subpopulation identified by the Administrator under the conditions of use.'' 15 U.S.C. 2604(h)(4). In addition, a petitioner is responsible for providing supporting information for this determination in four general categories:

1. The effects of the new microorganism on health and the environment.
2. The magnitude of exposure of human beings and the environment to the new microorganism.
3. The benefits of the new microorganism for various uses and the availability of substitutes for such uses.
4. The reasonably ascertainable economic consequences of granting or denying the petition, including effects on the national economy, small business, and technological innovation.

The regulations at 40 CFR 725.67 specify that when applying to list a recipient microorganism for the tiered exemption under 40 CFR 725.420, petitioners should include information addressing six specified criteria, which EPA will use to evaluate the microorganism for listing. 40 CFR 725.67(a)(3)(iii). The six criteria are:

1. Identification and classification of the microorganism using available genotypic and phenotypic information.
2. Information to evaluate the relationship of the microorganism to any other closely related microorganisms which have a potential for adverse effects on health or the environment.
3. A history of safe commercial use for the microorganism.
4. Commercial uses indicating that the microorganism products might be subject to TSCA.
5. Studies which indicate the potential for the microorganism to cause adverse effects to health or the environment.
6. Studies which indicate the survival characteristics of the microorganism in the environment.

IV. Response to Public Comments on the 2012 Proposed Rule

The Agency received three comments on the 2012 Proposed Rule (Ref. 4). One comment, from an anonymous submitter (Ref. 7), concerned mold problems in rental housing and thus was not relevant to the proposed rule. A second comment, from an individual (Ref. 8), supported the proposed rule.

The third comment was a joint set of comments from the Biotechnology Industry Organization (BIO) and the Enzyme Technical Association (ETA) (Ref. 9). While generally supportive of the proposed rule, BIO/ETA raised three important issues with respect to EPA's proposed rule.

First, BIO/ETA expressed concern that the proposed wording in section 725.420(k), that reads ''*Trichoderma reesei* strain QM6a used only in . . .'' does not accurately reflect the range of *T. reesei* strain QM6a microorganisms currently being used in standard industrial fermentations. BIO/ETA requested that the phrase be reworded as ''*Trichoderma reesei* strain QM6a and its derivatives used only in . . .'' EPA agrees that the commenter's suggested language more accurately reflects the Agency's original intent. EPA did not originally intend to restrict the exemption to the naturally occurring QM6a isolate. Most of the strains of *T. reesei* currently used in industrial production are not the naturally occurring QM6a isolate, but are strains derived from QM6a that have been modified by physical or chemical mutagenesis to obtain microorganisms with improved enzyme-producing abilities. Accordingly, EPA has adopted the commenter's suggested revision to clarify that the exemption applies not only to the naturally occurring strain, but also to any strain derived from the naturally occurring QM6a.

Second, BIO/ETA expressed concern that the proposed regulation was too broadly worded and as drafted would not clearly distinguish between standard industrial fermentation operations used to produce enzymes, and fermentation operations conducted for other purposes. Specifically, the commenter raised concern that the inclusion of an unqualified restriction in proposed 40 CFR 725.420(k) that ''no solid plant material or insoluble substrate is present in the fermentation broth'' would prohibit the use of *T. reesei* in submerged standard industrial fermentation operations used for enzyme production. Enzyme production is the first phase of some industrial applications such as cellulosic ethanol production where the first fermentation is to grow the microorganism to produce enzymes, followed by another fermentation of pretreated plant biomass for conversion of the cellulose and hemicellulose to simple sugars (*i.e.,* saccharification), followed by a third fermentation of the sugars to ethanol by yeast or another ethanologen. As part of the process of growing the microbes for enzyme production by *T. reesei* QM6a and its derivatives, nutrients need to be available, including those from plant materials such as soy or corn, which may contain insoluble components. The second fermentation operation of saccharification of plant biomass may occur only after the *T. reesei* microorganism has been inactivated. The use of nutrients supplied by plant material (*e.g.,* soy meal, corn steep liquor) in the first fermentation for enzyme production has a long history of safe use.

To address this issue, the commenter suggested revising the regulatory text to ensure that the typical industry practice of supplying nutrients in the form of solid plant materials during the initial enzyme fermentation would fall within the scope of the proposed exemption. EPA agrees and is therefore changing the regulatory text to allow the use of solid plant material in the enzyme fermentation step. Under the final regulatory text, the use of the conventional fermentation ingredients from solid plant material—for example, soy or corn meal and other insoluble fermentation ingredients from corn or soy which contain insoluble components—is allowed when used specifically to provide nutrients for growth of the microorganism during standard enzyme fermentation as described in part 1 of the definition at 40 CFR 725.3.

The commenter further suggested adding text to clarify that the requirement to inactivate the organism applies prior to ''subsequent fermentation operations, and not to the initial enzyme production stage.'' EPA agrees that the commenter has identified a reasonable basis for concern with respect to the proposed regulatory text. EPA acknowledges that nutrients for microbial growth in submerged standard industrial fermentation during the initial enzyme production phase of the

fermentation operation may be supplied by soybean meal, corn steep liquor, or other plant-derived materials that may contain insoluble substrates. The use of such plant materials as nutrient sources for microbial growth in submerged standard industrial fermentation operations used for enzyme production is a standard industry practice with a long history of safe use, and it does not result in the production of secondary toxic metabolites such as paracelsin because the fermentations involve the logarithmic growth of the cells in the presence of optimal concentrations of carbon and nitrogen and other nutrients (see Unit V. for more detail on paracelsin). EPA did not originally intend to preclude such operations and agrees that revision to the regulatory text is warranted to clarify that solid plant material can be used to provide nutrients for growth of the microorganism during submerged standard enzyme fermentation operations.

However, EPA continues to have concern about the potential for the production of paracelsin during the second fermentation phase of cellulosic ethanol production, *i.e.,* the saccharification of the pretreated plant biomass, because of the presence of solid surfaces and an excess of carbon substrate with live *T. reesei* QM6a (and its derivatives) cells. Therefore, EPA is retaining the requirement that fermentation operations subsequent to the enzyme production fermentation phase may only be initiated after inactivation of the viable *T. reesei* cells as delineated in 40 CFR 725.422(d) (*i.e.,* by a procedure that has been demonstrated and documented to be effective in reducing the viable microbial population by at least 6 logs). Inactivation of *T. reesei* QM6a prior to a subsequent or secondary fermentation that may contain solid plant material or insoluble substrates (as defined at 40 CFR 725.3) avoids the potential for production of paracelsin.

BIO/ETA also commented that paracelsin may be produced under non-standard conditions of fermentation, such as ''surface fermentation media with large concentrations of biomass,'' and requested that EPA revise the rule to reflect this. EPA interprets this comment to mean ''surface fermentation media with large concentrations of biomass'' is the only condition under which paracelsin can be produced and that BIO/ETA is requesting that the rule be amended accordingly. EPA agrees that paracelsin may be produced under non-standard conditions of fermentation, such as surface fermentation with large concentrations of biomass. However, available scientific literature indicates that paracelsin may also be produced under certain other fermentation conditions. Scientific literature suggests that surface fermentation is synonymous with solid-state fermentation where microorganisms are grown on the surface of a solid support that is not submerged. While it is likely that the potential for paracelsin production is greater with solid-state/surface fermentation, the production of peptaibols (of which paracelsin is one) by *Trichoderma* species has been shown to occur even in liquid broth culture in the presence of plant material or insoluble substrates in laboratory studies. Thus, paracelsin production potentially may be produced in fermentation broth amended with plant material providing excess carbon. Therefore, EPA is not amending the rule to indicate that the only conditions in which paracelsin potentially may be produced are with surface fermentations with large concentrations of biomass.

V. EPA's Evaluation of Available Information on *T. reesei* QM6a and *B. amyloliquefaciens* subsp. *amyloliquefaciens* for the Criteria Delineated

Pursuant to 40 CFR 725.67, Genencor International, Inc., (subsequently supported by the Enzyme Technical Association (ETA)) and Novozymes North America, Inc., submitted Letters of Application to EPA requesting that *T. reesei* and *B. amyloliquefaciens* (Refs. 1 and 2) be added to 40 CFR 725.420 as candidate recipient microorganisms for the tiered exemptions. The letters of application provided information that the submitters believed demonstrate that activities affected by the requested exemptions would not present an unreasonable risk of injury to health or the environment. Information regarding the criteria specified in 40 CFR 725.67(a)(2) and 725.67(a)(3)(iii) were addressed in these letters of application to list *T. reesei* and *B. amyloliquefaciens* as recipient microorganisms under 40 CFR 725.420.

EPA has made the determination based on the information provided in the Letters of Application (Refs. 1 and 2), supplemental information provided by ETA (Refs. 10 and 11), and other information available to EPA that *T. reesei* QM6a, with certain restrictions, and *B. amyloliquefaciens* subsp. *amyloliquefaciens* will not present an unreasonable risk of injury to health or the environment, including an unreasonable risk to a potentially exposed or susceptible subpopulation, when used as recipient microorganisms provided that: (a) The existing criteria for the introduced genetic material listed in 40 CFR 725.422 are met, and (b) the physical containment and control technologies criteria listed at 40 CFR 725.422 are met. In making this determination, EPA identified workers as a potentially exposed or susceptible subpopulation to the substances under the conditions of use and concluded that, with the limitations described above, the substances will not present an unreasonable risk of injury to health or the environment. EPA's Risk Assessments for these two microorganisms (Refs. 5 and 6) are available in the docket.

This unit presents a summary of EPA's evaluation of the available information pertinent to the six criteria delineated in 40 CFR 725.67(a)(3)(iii) for both microorganisms.

A. Evaluation of Available Information Relevant to the Criteria for T. reesei QM6a as a Recipient Microorganism with Specified Conditions of Growth

1. Identification and classification of the microorganism using available genotypic and phenotypic information.

T. reesei is a hypercellulolytic fungus originally isolated in the Solomon Islands in 1944. *T. reesei* was found on deteriorating military fabrics such as tents and clothing. This isolate, designated as QM6a, was initially named *Trichoderma viride.* Approximately 20 years later, QM6a was re-classified as *Trichoderma reesei.*

T. reesei is the species name given to the anamorphic form (this form reproduces asexually) of the fungus whose teleomorphic form (this form reproduces sexually) is now understood to be *Hypocrea jecorina.*

Recent taxonomic studies have shown that the species *T. reesei* consists only of this single isolate QM6a and its derivatives. Many other strains called *T. reesei* isolated elsewhere have now been proposed as belonging to a newly named species, *T. parareesei,* based on differences in habitat, sporulation, and metabolic versatility. *T. reesei* has been shown to belong to a single species now referred to as *H. jecorina/T. reesei* (QM6a) which reflects its relationship to its teleomorph *H. jecorina.* The only anamorphic strains within the species *H. jecorina/T. reesei* are those of QM6a and its derivatives. The petition to add *T. reesei* to the list of microorganisms at 40 CFR 725.420 requested that EPA include all strains of *T. reesei.* However, given these recent taxonomic publications, all fungal strains correctly named *T. reesei* are, by definition, QM6a or a derivative.

Adequate genotypic and phenotypic information is available for classification of *T. reesei* QM6a and its derivatives. The American Type Culture Collection (ATCC) designation for this original strain of *T. reesei* QM6a is ATCC 13631.

2. *Information to evaluate the relationship of the microorganism to any other closely related microorganisms that have a potential for adverse effects on health or the environment.*

Closely related members of section *Longibrachiatum* do not have a potential for adverse effects; other less closely related *Trichoderma* species have a potential to cause adverse effects as pathogens of commercially produced mushrooms. These less closely related species include various species of the Harzianum clade, *T. aggressivum, T. pleuotrophilum,* and *T. fulvidum* that are responsible for significant loss of the mushroom crops of *Agaricus bisporus* and *Pleurotus ostreatus.*

T. reesei/H. jecorina can be distinguished from other *Trichoderma* species by a comprehensive approach employing criteria of the Genealogical Concordance Phylogenetic Species Recognition (GCPSR) concept, which commonly requires the use of genealogies of three or four genes, not just the sequences of spacer regions as previously utilized for identification. Use of the GCPSR protocol would separate *T. reesei* (sensu lato) from the opportunistic pathogens within the section *Longibrachiatum,* including *T. longibrachiatum* and *T. citrinoviride/H. schweinitzii,* as well as the mold disease pathogens of mushrooms.

3. *A history of safe commercial use for the microorganism.*

T. reesei QM6a has a long history of safe use producing a variety of commercial enzymes. *T. reesei* QM6a cellulases, beta-glucanases, and xylanases are used by the animal feed, baking, beverages, textile processing, detergent, pulp and paper, industrial chemicals, and biofuels industries.

For industrial enzyme production, *T. reesei* is generally grown in a closed, submerged standard industrial fermentation system. In submerged standard industrial fermentation operations used for enzyme production, growth of the microorganism occurs beneath the surface of the liquid growth medium. As described in this unit, this type of fermentation system appears to be typical throughout the industry, based on EPA's review of MCAN submissions over the years.

Under this type of fermentation system, the fermentation broth is a defined mixture of carbon and nitrogen sources, some of which may be supplied from plant material or soluble substrates (*e.g.,* soy meal, corn steep liquor), minerals, salts, and other nutrients, is maintained at optimal pH and temperature, and is typically aerated and mixed. These conditions support the active growth and productivity of the organisms for enzyme production. Submerged standard industrial fermentation operations used for enzyme production systems reduce the potential for exposure of workers to the production organism and fermentation broth aerosols, reduce the potential for contamination of the culture and make the collection of extracellular enzymes simpler and less costly. The fermentation process is terminated before the *T. reesei* QM6a organisms go into the stationary growth phase (*i.e.,* before secondary metabolism begins). At the end of the fermentation process, the production organisms are separated from the fermentation broth and inactivated.

Several enzymes produced by *T. reesei* QM6a have Generally Recognized as Safe (GRAS) status with the Food and Drug Administration (FDA) or FDA had no questions about the GRAS conclusions about them contained in GRAS submissions to FDA. This supports the Agency's conclusion that commercial use of *T. reesei* QM6a and its derivatives as a recipient microorganism for commercial enzyme production will not present an unreasonable risk of injury to health or the environment. *T. reesei* QM6a enzymes used in foods that have been granted GRAS status or for whose claimed GRAS status FDA had no questions include cellulase, hemicellulase, transglucosidase, pectin lyase, acid fungal protease, and a chymosin enzyme preparation. Data supporting the GRAS notices included the results of pathogenicity tests for the *T. reesei* QM6a production organisms and toxicity tests for the enzyme products. The data showed that the production strains are not pathogenic and did not produce toxins during enzyme fermentation.

4. *Commercial uses indicating that the microorganism products might be subject to TSCA.*

EPA has reviewed 48 MCANs involving intergeneric *T. reesei* production organisms used to manufacture a number of industrial enzymes, including amylases, glucosidases, proteases, phytase, laccase, and numerous cellulolytic enzyme preparations. Amylases and glucosidases are used for the breakdown of starch into sugars and have been used in laundry detergents and in textile processing. More recently, industrial enzymes produced by *T. reesei* have been produced for corn and cellulosic ethanol production. *T. reesei* produces numerous cellulases and hemicellulases that are efficient in degrading plant biomass. Intergeneric *T. reesei* strains could also be used to manufacture industrial chemicals other than enzymes such as surfactants or specialty chemicals. More detailed information on MCANs submitted to EPA can be viewed on EPA's TSCA Biotechnology Program web page: *https://www.epa.gov/regulation-biotechnology-under-tsca-and-fifra/overview-biotechnology-under-tsca.*

5. *Studies which indicate the potential for the microorganism to cause adverse effects to health or the environment.*

a. *Human health hazards* — i. *Pathogenicity. T. reesei* QM6a is not pathogenic to humans. Due to its long history of use for production of enzymes used in food applications, the potential for the fungus and its products to be pathogenic or toxic to humans has been evaluated numerous times. Various studies have been conducted assessing *T. reesei* QM6a's pathogenic potential in healthy and immunocompromised laboratory animals. With the exception of one study where a high inoculum of intravenous (iv) and intraperitoneal (ip) injection of spores in immunocompromised mice resulted in pathogenic effects, studies have demonstrated a lack of pathogenicity of *T. reesei* QM6a. Numerous pathogenicity studies have been conducted as part of GRAS notices to FDA for several different enzymes used in the food industry. Studies using injection of *T. reesei* QM6a in rats, using both healthy and immunosuppressed rats, and using ip injection of viable and heat-killed cells of *T. reesei* QM6a in rats have all demonstrated a lack of potential pathogenicity to humans.

T. reesei QM6A is not known to possess any virulence factors associated with colonization or disease such as adherence factors, penetration factors, necrotic factors, toxins, or the ability to grow at human body temperature, 37 °C. There are no reports of harmful effects associated with the use of or exposure to *T. reesei* QM6A strains, even after decades of commercial use for enzyme production. The body of evidence indicates that *T. reesei* QM6A does not pose concerns regarding human pathogenicity.

ii. *Toxicity.* Available data indicate that *T. reesei* QM6a strains used in submerged standard industrial fermentation operations used for enzyme production do not present

human toxicity concerns. A number of studies have been conducted assessing the potential for *T. reesei* QM6a to produce toxins during submerged standard industrial fermentation operations used for enzyme production for food, pharmaceutical, or industrial uses. A cellulase enzyme known as celluclast produced by *T. reesei* QM6a has been tested for general oral toxicity and inhalation toxicity. Acute oral toxicity studies conducted in mice, rats, and dogs showed that *T. reesei* QM6a cellulase was not toxic to any of the test animals. Subchronic toxicity studies showed no evidence of systemic effects in dogs or rats. Additional toxicity studies have been conducted on other enzymes produced by *T. reesei* QM6a, the results of which have been presented in various GRAS petitions. Acute oral toxicity tests on two endoglucanases and a glucoamylase showed a lack of toxins. Subchronic feeding studies conducted on a cellulase, two xylanases, two endoglucanases, a protease, and a glucoamylase also showed a lack of toxicity in rats.

Under typical industry practice, industrial fermentations of *T. reesei* QM6a for enzymes to be used in food are routinely checked by the enzyme producers to confirm the absence of antibiotic activity and toxins (Ref. 12). Relying on the data that show *T. reesei* QM6a has a long history of safe use in the production of food enzymes, EPA has concluded that strains used industrially would not be expected to produce these toxins under the conditions of submerged standard industrial fermentation used for enzyme production.

iii. *Mycotoxins and other secondary metabolites.* The only health concern associated with *T. reesei* QM6a is its ability to produce a peptaibol secondary metabolite called paracelsin. Peptaibols are small linear peptides of 1,000–2,000 daltons characterized by a high content of the non-proteinogenic amino acid α-amino-isobutyric acid (Aib), with an *N*-terminus that is typically acetylated, and a *C*-terminus that is linked to an amino alcohol, which is usually phenylalaninol, or sometimes valinol, leucinol, isoleucinol, or tryptophanol. Peptaibols are associated with a wide variety of biological activities and have antifungal, antibacterial, sometimes antiviral, antiparasitic, and neurotoxic activity. Paracelsin has been shown to damage mammalian cells such as human erythrocytes with an *in vitro* hemolytic activity of $C_{50} = 3.7 \times 10^{5}$ mole/liter (mol/L) (Ref. 5).

Paracelsin has not been detected in the use of *T. reesei* QM6a under the submerged standard industrial fermentation operations used for enzyme production, and numerous toxicity studies on enzyme products of *T. reesei* QM6a have demonstrated a lack of toxicity to laboratory animals. EPA therefore expects that paracelsin production would be of insignificant concern, provided the microorganisms are produced with submerged standard industrial fermentation operations used for enzyme production as described at 40 CFR $_{725.3}$.

Under other conditions of fermentation, for example with the deliberate fermentation of cellulosic biomass for saccharification of plant material or extended fermentation, paracelsin may be produced (Ref. 5). Neither the information submitted with the petition, nor the information that is otherwise available is sufficient to allow EPA to determine the extent of paracelsin formation under these non-standard conditions. Consequently, EPA is unable to determine whether the use of the microbe under conditions other than submerged standard industrial fermentation operations used for enzyme production (*i.e.,* specific conditions under which paracelsin is not expected to be formed) will not pose an unreasonable risk to human health and/or the environment (Ref. 5).

b. *Environmental hazards*—i. *Hazards to animals. T. reesei* QM6a is not pathogenic to domesticated animals or wildlife. However, the secondary metabolite paracelsin has been shown to exhibit toxicity to aquatic species. A 24-hr exposure of paracelsin to *Artemia salina* (brine shrimp) resulted in a lethal concentration of 50% (LC_{50}) of 21.26 micromoles (μM) (40.84 micrograms per milliliter (μg/ml)) which decreased to 9.66 μM (18.56 μg/ml) with a 36-hr exposure. With *Daphnia magna,* paracelsin was found to be moderately toxic, with an LC_{50} of 7.70 μM (14.79 μg/ml) with a 24-hr exposure, and 5.60 μM (10.76 μg/ml) with a 36-hr exposure.

ii. *Hazards to plants. T. reesei* QM6a is not a pathogen of plants. Although it is capable of degrading cellulose and hemicellulose due to the copious quantities of the enzymes it can produce, it cannot be a primary colonizer on plant tissue. Genetic studies have shown that *T. reesei* QM6a does not contain any genes for ligninases, required for initial breakdown of plant material. This species is known as a wood rot fungus, but it apparently attacks only decaying plant material, not live plants.

iii. *Effects on other organisms.* Peptaibols are toxic to Gram-positive bacteria and various fungi. The inhibitory action of peptaibols on various fungi is the reason that many species of *Trichoderma* are used as biocontrol agents of plant pathogenic fungi. The peptaibol produced by *T. reesei,* QM6a paracelsin, has been shown to be inhibitory to one particular fungus, *Phoma destructiva.*

Some species of *Trichoderma,* specifically *T. aggressivum, T. pleuotrophilum,* and *T. fulvidum* are pathogens of mushrooms. However, *T. reesei* QM6a is not a pathogen of mushrooms.

6. *Studies which indicate the survival characteristics of the microorganism in the environment.* The species *T. reesei* is known only from the single original isolate QM6a from the Solomon Islands. Therefore, there is little information on its prevalence or behavior in the environment. Microcosm studies have been conducted that suggest it would survive in the environment in the plant rhizosphere and in bulk soils if inadvertently released.

Although *T. reesei* was originally isolated from a tropical climatic region, it would be expected to persist in soils for extended periods of time, even after cold temperatures.

B. Evaluation of Available Information Relevant to the Criteria for B. amyloliquefaciens as a Recipient Microorganism

1. *Identification and classification of the microorganism using available genotypic and phenotypic information.*

B. amyloliquefaciens was initially proposed as a unique species in 1943. The name *B. amyloliquefaciens* lost standing when it was not included on the Approved List of Bacterial Names with Standing in Nomenclature in 1980. Since classical phenotypic tests could not differentiate it as a unique species from *Bacillus subtilis,* it was regarded as a subspecies of *B. subtilis* for several decades. However, molecular evidence from subsequent studies led to the conclusion that *B. amyloliquefaciens* did indeed deserve independent status. The DNA homology between *B. subtilis* and *B. amyloliquefaciens* is only about 15%. In addition, there were several phenotypic properties that differed between the two species. Chemotaxonomic studies revealed additional capability of separating strains of *B. amyloliquefaciens* from the other related species, *Bacillus subtilis, Bacillus licheniformis,* and *Bacillus pumilus.* The species has remained within the genus *Bacillus sensu stricto* since it was last established as a separate species.

Recently, it has been proposed that there are two subspecies within the species *B. amyloliquefaciens, B.*

amyloliquefaciens subsp. *amyloliquefaciens* and *B. amyloliquefaciens* subsp. *plantarum.* The former subspecies includes the type strain and likely most, if not all, of the industrial strains of *B. amyloliquefaciens* used for enzyme production. The latter subspecies consists of plant-associated strains used as biocontrol agents due to the production of several antifungal lipopeptide and antibacterial polyketide toxins. This exemption is restricted to the subspecies *B. amyloliquefaciens* subsp. *amyloliquefaciens* which contains the industrial strains used for enzyme production. Adequate genotypic and phenotypic information is available to accurately identify *B. amyloliquefaciens* subsp. *amyloliquefaciens.*

2. *Information to evaluate the relationship of the microorganism to any other closely related microorganisms which have a potential for adverse effects on health or the environment.*

There are several species in the genus *Bacillus* that are known pathogens. These include *Bacillus anthracis,* which is pathogenic to humans and other animals, and *Bacillus cereus,* which is a common cause of food poisoning. *Bacillus thuringiensis, Bacillus larvae, Bacillus lentimorbus, Bacillus popilliae,* and some strains of *Bacillus sphaericus* are pathogenic or toxigenic to certain insects. The new subspecies *Bacillus amyloliquefaciens* subsp. *plantarum* has been shown to exhibit toxicity mainly to plant pathogenic fungi but can also be cytotoxic to mammalian cells. It is possible, using polyphasic approaches, to differentiate between *B. amyloliquefaciens* subsp. *amyloliquefaciens* and these other species and subspecies that have the potential to adversely affect humans or other organisms. *B. amyloliquefaciens* can be distinguished from the very similar *Bacillus subtilis* by a few phenotypic traits and DNA dissimilarity.

3. *A history of safe commercial use for the microorganism.*

B. amyloliquefaciens subsp. *amyloliquefaciens* has been used to produce commercial enzymes for more than 50 years. It produces carbohydrases, proteases, nucleases, xylanases, and phosphatases that have applications in the food, brewing, distilling, and textile industries.

For commercial enzyme production, *B. amyloliquefaciens* subsp. *amyloliquefaciens* is grown in a closed submerged fermentation. In submerged fermentation, growth of the microorganism occurs beneath the surface of the liquid growth medium. The fermentation broth is a defined mixture of carbon and nitrogen sources, minerals, salts, and other nutrients that is maintained at optimal pH and temperature. These conditions support the active growth and productivity of the organisms. Submerged fermentation systems reduce the potential for exposure of workers to the production organism and fermentation broth aerosols, reduce the potential for contamination of the culture, and make the collection of extracellular enzyme simpler and less costly. The fermentation process is terminated before the *B. amyloliquefaciens* subsp. *amyloliquefaciens* organisms enter the stationary growth phase, and the production organisms are separated from the fermentation broth and inactivated. The enzyme preparation may also be subjected to other purification processes.

B. amyloliquefaciens subsp. *amyloliquefaciens* has a long history of safe use for enzyme production in food and industrial applications with no incidences associated with human pathogenicity. In response to a petition from the ETA, FDA affirmed that carbohydrase enzyme preparations and protease enzyme preparations derived from either *Bacillus subtilis* or *Bacillus amyloliquefaciens* are GRAS for use as direct food ingredients. The European Food Safety Authority (EFSA) has put *B. amyloliquefaciens* on their list of bacteria that have a ''qualified presumption of safety'' because of a long history of apparent safe use in food and feed production. However, it was put on the list with a qualifier that only strains of *B. amyloliquefaciens* that do not have toxigenic potential be used.

One strain of *B. amyloliquefaciens* has been used as a biopesticide. A naturally occurring strain of *B. amyloliquefaciens* subsp. *plantarum* was registered in 2000 as a biopesticide active ingredient under the Federal Insecticide, Fungicide, and Rodenticide Act. It can only be used on certain ornamental, non-food plants in greenhouses and other closed structures.

4. *Commercial uses indicating that the microorganism products might be subject to TSCA.*

It is expected that intergeneric strains of *B. amyloliquefaciens* subsp. *amyloliquefaciens* would be used to produce enzymes and to manufacture other industrial chemicals subject to TSCA. Many enzymes produced by *B. amyloliquefaciens,* particularly α-amylase, are used in laundry detergents and in textile processing. *B. amyloliquefaciens* also makes a surfactant known as surfactin which functions as an antibiotic.

5. *Studies which indicate the potential for the microorganism to cause adverse effects to health or the environment.*

a. *Human health hazards*— i. *Pathogenicity. B. amyloliquefaciens* is not pathogenic to humans. There are no reports in the literature associating *B. amyloliquefaciens* with infection or disease in humans. *B. amyloliquefaciens* has been categorized as a Biosafety Level 1(BSL1) microorganism by the Centers for Disease Control and Prevention (CDC). BSL1 microorganisms are well-characterized agents not known to consistently cause disease in immunocompetent adult humans, and which present minimal potential hazard to laboratory personnel and the environment. Animal toxicity studies were performed with *B. amyloliquefaciens* strain FZB24 to support its registration as a biopesticide. Tests for acute oral toxicity/pathogenicity, acute pulmonary toxicity/pathogenicity, and acute injection toxicity/pathogenicity showed little to no adverse effects, which indicated low mammalian toxicity and a lack of pathogenicity/infectivity.

ii. *Toxins and other secondary metabolites.* Although another species in the genus *Bacillus, B. cereus,* has the potential to produce food poisoning toxins which cause both emetic and diarrheal syndromes, and a variety of local and systemic infections, the risk of food-borne disease caused by bacilli other than *B. cereus* is generally considered to be negligible because usually only *B. cereus* has the genes that encode food poisoning toxins. Industrial strains of *Bacillus* species belonging to the *Bacillus subtilis* group, which includes *B. amyloliquefaciens,* do not express *B. cereus* toxins. In addition, there are no reported cases of food poisoning associated with *B. amyloliquefaciens.*

Some strains of *B. amyloliquefaciens* have been shown to produce bioactive cyclic lipopeptide metabolites such as iturin, surfactin, fengycin, and bacillomycin D. These are cyclical lipoprotein biosurfactants produced by non-ribosomal peptide synthesis. They have a low mammalian toxicity as demonstrated by a lethal dose of 50% (LD_{50}) of >2,500 milligram/kilogram (mg/kg) in an acute toxicity test of surfactin C, and a no observed adverse effect level of 500 mg/kg-day in a repeat dose oral gavage study. Some strains of *B. amyloliquefaciens* may also produce the polyketide toxins macrolactin, bacillanene, and difficidin. *B. amyloliquefaciens* also produces the protein toxin barnase and the antifungal protein baciamin.

There are reports of the isolation of *B. amyloliquefaciens* from water-damaged buildings in which occupants were suffering ill health symptoms. Extracts from biomass of isolated strains of *Bacillus* exhibiting antifungal properties were assessed for toxicity endpoints. All of the isolated *B. cereus* and *B. amyloliquefaciens* strains studied showed cytotoxicity as evidenced by inhibition of boar spermatozoa motility; however, the *B. amyloliquefaciens* strains affected boar spermatozoa differently from the indoor *B. cereus* isolates and the reference food-poisoning strain.

The isolation of cytotoxic strains of *B. amyloliquefaciens* from water-damaged buildings is of little concern in relation to the exemption of *B. amyloliquefaciens* subsp. *amyloliquefaciens.* It is important to note that the *Bacillus amyloliquefaciens* strains studied in water-damaged buildings were specifically selected for further study because the isolates exhibited antifungal activity. Some of the secondary metabolites produced by these strains of *B. amyloliquefaciens* also exhibited cytotoxicity to mammalian cells (*i.e.,* boar spermatozoa). However, industrial strains of *B. amyloliquefaciens* that are classified as *B. amyloliquefaciens* subsp. *amyloliquefaciens* have been shown not to produce most, if not all, of the antifungal and antibacterial lipopeptides and polyketides produced by the biocontrol-type strains. The genome of the type strain of *B. amyloliquefaciens* DSM 7^T (now *B. amyloliquefaciens* subsp. *amyloliquefaciens*) is very similar to the genome of the biocontrol strain FZB42 (*B. amyloliquefaciens* subsp. *plantarum*). However, the latter subspecies had genomic islands carrying prophage sequences, transposases, integrases, and recombinases that the DSM 7^T type strain did not have. The DSM 7^T type strain was shown to have a diminished capacity to non-ribosomally synthesize secondary metabolites with antifungal and antibacterial activities. The DSM 7^T type strain could not produce the polyketides difficidin or macrolantin, and could not produce lipopeptide such as iturin, macrolantin, and other compounds except for the compound surfactin.

Although there are isolated reports of toxin production in several antifungal, environmental isolates of *B. amyloliquefaciens,* the larger body of studies available on the safety and toxicity of *B. amyloliquefaciens* strains used industrially for enzyme production (Ref. 6) indicate that these strains are safe and non-toxic. For example, the industrial strains of *B. amyloliquefaciens, Bacillus subtilis,* and *Bacillus licheniformis* used for large-scale enzyme production did not exhibit any cytotoxicity in Chinese hamster ovary tests. In Europe, the toxicity of two strains of *B. amyloliquefaciens* used in the production of α-amylase and bacillolysin was assessed by EFSA's Scientific Panel on Additives and Products or Substances used in Animal Feed. The panel concluded that the *B. amyloliquefaciens* production strains DSM9553 and DSM9554, when used as a source of extracellular enzyme, do not present a toxigenic risk. Given its widespread distribution in the environment, its long history of safe use in industrial fermentation, the absence of reports on pathogenicity to humans, and the limited reports of cytotoxicity, EPA concludes that the use of *B. amyloliquefaciens* in fermentation facilities for production of enzymes or specialty chemicals does not present a human health concern.

b. *Environmental hazards*— i. *Hazards to animals.* There are no reports suggesting that *B. amyloliquefaciens* is pathogenic to domesticated animals or wildlife. The cytotoxicity of antifungal secondary metabolites to mammalian cells by biocontrol strains of *B. amyloliquefaciens* subsp. *plantarum* is discussed in this Unit.

ii. *Hazards to plants. B. amyloliquefaciens* is not pathogenic to plants. The plant-associated strains of *B. amyloliquefaciens* are beneficial to plants because they inhibit the growth of fungal plant pathogens. Antifungal and antibacterial secondary metabolites produced by strains of *B. amyloliquefaciens* such as iturins, surfactins, fengycin, bacillomycins, and azalomycin have been shown to inhibit the growth of *Rhizoctonia solani, Xanthomonas campestris* pv. *campestris, Alternaria brassicae, Botyris cinerea, Leptosphaeria maculans, Verticillium longisporum, Pythium ultimatum, Aspergillus* spp., *Fusarium* spp., *Bipolaris sorokiniana,* and *Fusarium oxysporum.*

In addition to producing antifungal and antibacterial compounds, *B. amyloliquefaciens* is known as a plant growth-promoting rhizobacterium, and some of the biological control strains of *B. amyloliquefaciens* were shown to produce the phytohormone indole-3-acetic acid.

6. *Studies which indicate the survival characteristics of the microorganism in the environment.*

Several studies assessing the survival of *B. amyloliquefaciens* are available in the public literature and are described in EPA's Risk Assessment of *B. amyloliquefaciens* (Ref. 6). Given that the natural habitat for *B. amyloliquefaciens* is typically in soil, on plant roots, or as an endophyte within the roots or stems of plants, the bacterium is likely to survive for a least some period of time if inadvertently released to the environment. However, like other bacilli, survival in soil may occur predominately as the resistant endospore state, whereas in the rhizosphere, it may exist as active vegetative cells.

VI. Physical Containment and Control Technologies for *T. reesei* QM6a and *B. amyloliquefaciens* subsp. *amyloliquefaciens*

A. Release and Exposure Assessment in Support of the TSCA Section 5(h)(4) Exemption for T. reesei QM6a

The estimated releases of the microorganism from an enzyme manufacturing facility and exposures of workers, the general population, and the environment to the microorganisms are based on a generic scenario developed by EPA in 1997 for large-scale closed system enzyme fermentation. The generic scenario assumes the facility operates 350 days/year, produces 100 batches/year, the maximal cell concentration in the fermentation broth is 1×10^7 colony-forming units (cfu)/ml, and the volume of the fermentation broth is 70,000 L. The process consists of the main steps of laboratory propagation, fermentation, inactivation, and recovery where filtration operations separate out the microbial biomass from the concentrated desired product. The operations, sources of exposure and release are described in more detail in EPA's Release and Exposure Assessment (Ref. 13).

Exposures of workers to the microorganisms in during processing operations using submerged standard industrial fermentation do not pose concerns. The release of microbial cells in aerosols or in liquid and solid waste streams in submerged standard industrial fermentation operations with the containment and inactivation conditions of the Tier I exemption, are considered low. Thus, potential exposures to the general human population to the microorganism through inhalation or drinking water ingestion and to the environment are also low.

B. Release and Exposure Assessment in Support of the TSCA Section 5(h)(4) Exemption for B. amyloliquefaciens subsp. amyloliquefaciens

The estimated releases of the microorganism from an enzyme manufacturing facility and exposures of the microorganisms to workers, the general population, and the environment are based on a generic scenario developed by EPA in 1997 for large-scale closed system enzyme fermentation. The generic scenario assumes the facility operates 350 days/year, produces 100 batches/year, the maximal cell concentration in the fermentation broth is 1×10^{11} cfu/ml and the volume of the fermentation broth is 70,000 L. The process consists of the main steps of laboratory propagation, fermentation and then recovery where filtration operations separate out the biomass from the concentrated desired product. The operations, sources of exposure and release are described in more detail in EPA's Release and Exposure Assessment (Ref. 14).

Exposures of workers to the microorganisms during processing operations using submerged standard industrial fermentation do not pose concerns. The release of microbial cells in aerosols or in liquid and solid waste streams in submerged standard industrial fermentaion operations with the containment and inactivation conditions of the Tier I exemption are considered low. Thus, potential exposures to the general human population to the microorganism through inhalation or drinking water ingestion and to the environment are also low.

VII. Risk Assessment Overview for *T. reesei* QM6a and *B. amyloliquefaciens* subsp. *amyloliquefaciens*

EPA's Risk Assessment documents (Refs. 5 and 6) provide more detailed information, and supporting references, for EPA's evaluation of the available information and the potential risks to health and the environment. EPA has determined that because of the low hazard potential and safe history of use of *T. reesei* QM6a and *B. amyloliquefaciens* subsp. *amyloliquefaciens,* the TSCA section 5(h)(4) exemption will not present an unreasonable risk of injury to health or the environment, including an unreasonable risk of injury to a potentially exposed or susceptible subpopulation under the conditions of use, provided that the other conditions of the exemptions at 40 CFR part 725, subpart G, relating to the introduced genetic material, and the physical containment of the new microorganisms, have been met.

A. Risk Assessment for T. reesei QM6a

There is only one potential concern for human health and environmental hazards associated with *T. reesei* QM6a, and that is for paracelsin production. Paracelsin production is not expected to occur in submerged standard industrial fermentation operations conducted solely for growth of the microorganism to produce enzymes. There is no concern for potential pathogenicity of *T. reesei* QM6a to humans, plants, domesticated animals, or wildlife. The body of evidence of pathogenicity testing on various industrial strains indicates that *T. reesei* is not pathogenic to humans. Toxicity testing on a number of enzymes produced by *T. reesei* indicates that the fungus does not produce toxins when used in the submerged standard industrial fermentation operations used for enzyme production.

T. reesei has a long history of safe use and is expected to present low hazard to workers, the general public, and the environment. Although direct monitoring data are unavailable, estimates of potential exposures made by EPA in its assessment of potential risks (Ref. 5) do not indicate high levels of exposure of *T. reesei* to either workers or the public from submerged standard industrial fermentation operations used for enzyme production. Standard industrial hygiene management practices currently used in the fermentation industry reduce the potential for adverse health effects in the workplace. The use of engineering controls (closed fermentation systems), appropriate work practices, personal protective equipment, and personal hygiene reduce the potential for worker exposure. Thus, current practices reduce the potential for the dermal and respiratory exposures estimated by EPA.

Based on worst-case exposure scenarios and toxicity of the microorganism, EPA has made the determination that the potential risk to workers, the general public, and to the environment resulting from the use of *T. reesei* QM6a in submerged standard industrial fermentation operations used for enzyme production is low, provided the additional criteria of the tiered exemptions for the introduced genetic material and the physical containment conditions are met (Ref. 5).

B. Risk Assessment for B. amyloliquefaciens subsp. amyloliquefaciens

Industrial strains of *B. amyloliquefaciens* subsp. *amyloliquefaciens* are not pathogenic to humans, plants, domesticated animals, or wildlife, and do not produce many of the toxic secondary metabolites found in biological control strains of *B. amyloliquefaciens* subsp. *plantarum.* The long history of safe use of enzymes produced by industrial strains of *B. amyloliquefaciens* in food is evidence that the bacterium does not produce toxins under standard conditions used for enzyme production.

Current practices in the fermentation industry reduce the potential for adverse health effects in the workplace. The use of engineering controls (closed fermentation systems), appropriate work practices, personal protective equipment, and personal hygiene reduce the potential for worker exposure and reduce the potential for the dermal and respiratory exposures.

Industrial strains of *B. amyloliquefaciens* have a long history of safe use and are expected to present low hazard to workers, the general public, and the environment. Although direct monitoring data are unavailable, exposure estimates do not suggest high levels of exposure of *B. amyloliquefaciens* subsp. *amyloliquefaciens* to either workers or the public resulting from the industrial fermentation procedures that are standard throughout the industry.

Based on worst-case exposure scenarios and toxicity of the microorganism, EPA has made the determination that the potential risk to workers, the general public, and the environment associated with the use of industrial strains of *B. amyloliquefaciens* subsp. *amyloliquefaciens* in submerged standard industrial fermentation is low provided the additional criteria of the tiered exemptions for the introduced genetic material and the physical containment conditions are met (Ref. 6).

VIII. Rationale for Adding *T. reesei* QM6a and *B. amyloliquefaciens* subsp. *amyloliquefaciens* to the List of Recipient Microorganisms at 40 CFR 725.420

A. Statutory Background

On June 22, 2016, the ''Frank R. Lautenberg Chemical Safety for the 21st Century Act,'' amended TSCA (15 U.S.C. 2601 *et seq.*) (Ref. 15). Pursuant to TSCA section 5(h)(4), EPA is authorized, upon request and by rule, to exempt the manufacturer of any new

chemical substance from all or part of the requirements of TSCA section 5 if EPA determines that the manufacture, processing, distribution in commerce, use, or disposal of the chemical substance, or any combination of such activities, will not present an unreasonable risk of injury to human health or the environment, including an unreasonable risk to a potentially exposed or susceptible subpopulation identified by the Administrator under the conditions of use. The amended language of the statute with regard to section 5(h)(4) did not alter EPA's approach to balancing the considerations of the costs and benefits of issuing an exemption rule.

B. EPA's Approach for Assessing ''Unreasonable Risk'' for T. reesei QM6a and B. amyloliquefaciens subsp. amyloliquefaciens

In determining whether *T. reesei* QM6a and *B. amyloliquefaciens* subsp. *amyloliquefaciens* will not present an unreasonable risk of injury to human health or the environment, the Agency considered more than just the inherent risks presented by the two microorganisms. The Agency also considered the full range of societal benefits associated with the exemption; for example, as discussed in more detail below, EPA considered not only the cost savings to the users of the microorganism, but also the societal benefits that flow from promotion of the use of low-risk recipient microorganisms, while allowing the Agency to direct its resources toward reviewing higher risk microorganisms.

It is important that EPA is revising one aspect of the existing tiered exemptions at 40 CFR 725.420 by expanding the exemption to apply to two specific microorganisms. The narrow scope of this action affected the scope of EPA's cost-benefit analysis in which EPA compared the risks and benefits of the two microorganisms being considered for an exemption with the risks that would have resulted if those same two microorganisms remained subject to full MCAN submission requirements and 90-day EPA review. EPA did not compare the risks and benefits that would result from use of these two microorganisms in the absence of any regulation.

It is also significant that the standard applicable to this rule is that the microorganisms ''will not present unreasonable risk,'' rather than ''no risk.'' It is not possible to eliminate all risks associated with the manufacture, processing, distribution in commerce, use, and disposal of any new microorganism.

C. Application of No Unreasonable Risk Factors for T. reesei QM6a and B. amyloliquefaciens subsp. amyloliquefaciens

The following is an explanation of the factors and their analyses relevant to the no unreasonable risk finding.

1. *Risks associated with these two microorganisms.* EPA's evaluation of the available information concerning *T. reesei* QM6a and *B. amyloliquefaciens* subsp. *amyloliquefaciens* against these criteria is presented in detail in Unit V., and is summarized again here for the readers' convenience.

The Agency developed specific criteria in 40 CFR 725.67 that the Agency uses in determining the extent of a potential recipient microorganism's risks, and its eligibility for listing at 40 CFR 725.420. These criteria were explained in detail in the proposed ''biotech'' rule (Ref. 16), the final ''biotech'' rule (Ref. 17), and are discussed in Unit V. EPA's conclusions for these two microorganisms are based on the available data and EPA's experience under 40 CFR part 725. *T. reesei* QM6a is not pathogenic to humans, plants, domesticated animals, or wildlife and the fungus does not produce toxins under submerged standard industrial fermentation operations used for enzyme production. *T. reesei* QM6a has a long history of safe use and is generally expected to present low risk to workers, the general public, and the environment resulting from submerged standard industrial fermentation operations used for enzyme production that are standard throughout the industry.

Under non-standard conditions of fermentation, such as with the deliberate fermentation of cellulosic biomass for saccharification of plant material or extended fermentation, paracelsin may be produced. The risks associated with the production of paracelsin may be significant due to its toxicity to mammalian cells, aquatic species, Gram-positive bacteria, and various fungi. However, the potential risk associated with paracelsin production is expected to be significantly reduced by this rule, which limits the exemption to fermentation operations using submerged standard industrial fermentation operations used for enzyme production.

Industrial strains of *B. amyloliquefaciens* subspecies *amyloliquefaciens* are not pathogenic to humans, plants, domesticated animals, or wildlife, and do not produce toxins under standard conditions used for enzyme production. Industrial strains of *B. amyloliquefaciens* subsp. *amyloliquefaciens* used for the production of enzymes have a long history of safe use and are expected to present low hazards to human health and the environment.

Only strains of *B. amyloliquefaciens* that fall into the subspecies *B. amyloliquefaciens amyloliquefaciens* were considered as the eligible recipient microorganism at 40 CFR 725.420. In this rule, EPA is excluding other strains/subspecies of these two species for which:

- The Agency has insufficient data and review experience to find that they will not present an unreasonable risk of injury or
- The Agency has found that, under certain conditions, based on data on the species in question, a strain or subspecies may present an unreasonable risk, thereby requiring a closer examination of the conditions of manufacturing, processing, distribution in commerce, use, and disposal during a 90-day MCAN review. Consequently, additional information would be necessary to make an appropriate determination about the organisms' potential risks.

The Agency believes that the requirement for submission of a MCAN followed by a 90-day review period for new intergeneric microorganisms that use *T. reesei* QM6a and *B. amyloliquefaciens* subsp. *amyloliquefaciens* as recipient microorganisms is not necessary to address the risks associated with these microorganisms and would not result in any additional protection than would be achieved by this rule. This conclusion is based, in part, on EPA's findings regarding the intrinsically low level of hazard that these two organisms pose to human health and the environment. The requirements of the Tier I and Tier II exemptions and the restrictions in this rule on fermentation conditions place sufficient constraints to significantly limit the potential risks of injury to human health or the environment, including potential risks to potentially exposed or susceptible subpopulations under the conditions of use. In making this determination, EPA identified workers as a potentially exposed or susceptible subpopulation to the substance under the conditions of use and concluded that, with the limitations described above, the substances will not present an unreasonable risk of injury to health or the environment.

The Agency concludes that the criteria set forth in this rule are sufficient to mitigate the identified risks associated with these microorganisms. Because of the low hazard potential and safe history of use of *T. reesei* QM6a and

B. amyloliquefaciens subsp. *amyloliquefaciens,* EPA concludes that the TSCA section 5(h)(4) exemption will not present an unreasonable risk of injury to health or the environment, including an unreasonable risk of injury to a potentially exposed or susceptible subpopulation under the conditions of use, provided that the other conditions of the exemptions at 40 CFR part 725, subpart G, relating to the introduced genetic material, and the physical containment of the new microorganisms, have been met.

2. *Costs.* As discussed in Unit X., this rule is anticipated to reduce costs to currently regulated entities in the long run. Expanding the list of recipient microorganisms eligible for exemption does not otherwise impose any additional cost or other burden on currently regulated entities, or existing fermentation processes.

Limiting the use of this exemption to the identified fermentation conditions is also estimated to impose no burden on affected entities. The restriction merely codifies existing industrial fermentation procedures for manufacturing operations that currently seek to use tiered exemptions. Consequently, EPA expects that most, if not all, manufacturers using these microbes would already have the measures in place to qualify for the exemption. Equally important, this limitation would add no burden to any existing fermentation processes. Currently, fermentation operations with either of these microbes are not eligible for the tiered exemption, and thus a MCAN must be submitted. Any company that chooses to use a different fermentation process could continue to operate under the status quo and simply submit a MCAN. This rule simply offers an additional, less costly option, to facilities that choose to use the fermentation operations discussed in this rule.

3. *Benefits.* The following discussion describes the benefits of expanding the list of recipient microorganisms eligible for exemption in a qualitative manner; for a more quantitative approach, see the economic analysis prepared for this rule (Ref. 18). A summary of that economic analysis is also provided in Unit IX.

The benefits analyzed encompass more than the direct benefits associated with submitting a Tier I or Tier II exemption for a new intergeneric microorganism rather than a MCAN. EPA's benefit analysis included a consideration of the broader benefits to society. EPA's unreasonable risk determination is based on broader benefits to society as well as those benefits attributable to a reduction in the burden associated with submission of Tier I and Tier II exemptions rather than MCANs.

EPA has concluded that manufacturers of new intergeneric microorganisms based on these low-risk microorganisms currently bear an unnecessary regulatory burden. By adding *T. reesei* QM6a and *B. amyloliquefaciens* subsp. *amyloliquefaciens* to the list of eligible recipient microorganisms in 40 CFR 725.420, the Agency removes unnecessary regulatory impediments to the design, manufacture, and commercialization of these low risk new intergeneric microorganisms, and of the chemical substances that can be produced by these safer microorganisms. This action will also reduce the costs associated with industry's reporting burden, including the costs associated with the preparation of the submission, and with the delay in the commercial market introduction of the new intergeneric microorganism. Some of the cost-savings benefits may accrue to small businesses, either as developers of the exempt microorganisms, as producers of fermentation chemicals using the live microorganisms, or as customers for enzymes or other products made using the microorganisms.

There will also be a reduction in the Agency review resources currently allocated to reviews of MCANs for these two microorganisms. These Agency resources will be shifted to the review of new intergeneric microorganisms or chemical substances of greater concern.

The addition of the two microorganisms to the list of microorganisms eligible for exemption is expected to encourage innovation in the industry. It is reasonable to assume that a new intergeneric microorganism would either possess a new function or serve an existing function more efficiently or at a lower cost. The reduction in delay for that new intergeneric microorganism to be introduced into commerce is expected to be a benefit to both manufacturers and the general public who will have access to the substance more quickly. The expected benefits to innovation have not been quantified but include: Reduced time to develop and commercialize organisms; decreased cost of some downstream industrial products, such as fuel ethanol; improved consumer appeal of some products, such as certain textiles; and reduced costs of some consumer products, such as detergent and leather goods.

4. *Risk/benefit balance.* Determining the presence or absence of an unreasonable risk for purposes of issuing an exemption pursuant to TSCA section 5(h)(4) requires balancing of the benefits and risks posed by a regulatory action. EPA has determined that the risks are generally low based on the inherent properties and intended uses of *T. reesei* QM6a and *B. amyloliquefaciens* subsp. *amyloliquefaciens* and will be adequately managed by the restrictions in the rule, combined with the existing requirements of the Tier I and Tier II exemptions.

EPA anticipates that expanding the list of microorganisms eligible for exemption will impose no costs and will reduce costs to currently regulated entities that use those recipients. The limitation to certain fermentation conditions is not a cost that will be imposed by this rule but rather a limitation on the amount of regulatory relief it will provide. The limitations on fermentation conditions reflect industrial fermentation procedures that are currently common practices for the affected industry.

EPA has also concluded that the benefits of the addition of *T. reesei* QM6a and *B. amyloliquefaciens* subsp. *amyloliquefaciens* as recipient microorganisms to the list of recipient microorganisms at 40 CFR 725.420 are quite significant. This addition reduces the overall regulatory burden for affected entities by reducing the reporting requirements and by eliminating the delay of these products into commerce. The rule benefits both regulated entities and the general public by promoting the expedited manufacture and use of the chemical substances produced using these low-risk organisms and manufacturing processes. There is also the added benefit of concentrating limited EPA resources on regulation of chemical substances which have a greater potential to present significant risks, rather than on these two microorganisms. While this is difficult to quantify, it is considered substantial.

In sum, the criteria set forth in this exemption are sufficient to mitigate the low level of potential risks presented by these organisms, particularly when compared to the benefits, *in toto,* of this exemption, to levels that are consistent with the statutory standard for an exemption. Consequently, EPA has determined that adding *T. reesei* QM6a and *B. amyloliquefaciens* subsp. *amyloliquefaciens* as recipient microorganisms to the list of recipient microorganisms at 40 CFR 725.420 is appropriate. The two microorganisms

will not present an unreasonable risk of injury to human health or the environment when manufactured under the conditions of this exemption.

IX. Economic Impacts

EPA's economic analysis (Ref. 18) evaluates the potential for significant economic impacts as a result of the addition of two microorganisms (*T. reesei* QM6a and *B. amyloliquefaciens* subsp. *amyloliquefaciens*) to 40 CFR 725.420, which lists recipient microorganisms eligible for Tier I and Tier II exemptions. Over the course of the first 10 years after the effective date of the final rule, EPA estimates that the addition of the two microorganisms to the list will generate a total cost savings to society of approximately $4.5 million. Industry is estimated save approximately $2.7 million and the Agency approximately $1.8 million. The equivalent, annualized cost savings to industry are expected to be $260,000 per year and $252,000 per year at a 3% and 7% discount rate, respectively. EPA estimates that there will be a net decrease in burden to industry of 27,864 hours over this 10-year period.

X. Scientific Standards, Evidence, and Available Information

EPA has used scientific information, technical procedures, measures, methods, protocols, methodologies, and models consistent with the best available science, as applicable. These sources supply information relevant to a determination that the microorganisms subject to this rule will not present an unreasonable risk of injury to health or the environment, including an unreasonable risk to a potentially exposed or susceptible subpopulation identified by the Administrator under the conditions of use. The clarity and completeness of the data, assumptions, methods, quality assurance, and analyses employed are documented, as applicable and to the extent necessary for purposes of this rule, in Units V. through VIII. and in the references. The extent to which the various information, procedures, measures, methods, protocols, methodologies or models used in EPA's decision have been subject to independent verification or peer review is adequate to justify their use, collectively, in the record for this rule.

XI. References

The following is a listing of the documents that are specifically referenced in this document. The docket includes these documents and other information considered by EPA, including documents that are referenced within the documents that are in the docket, even if the referenced document is not physically located in the docket. For assistance in locating these other documents, please consult the technical person listed under **FOR FURTHER INFORMATION CONTACT**.

1. Genencor International, Inc. Letter of Application to list *Trichoderma reesei* as exempt under subpart G of 40 CFR part 725—Reporting Requirements and Review Processes for Microorganisms. March 17, 2005.

2. Novo Nordisk BioChem North America, Inc. Letter of Application to list *Bacillus amyloliquefaciens* as exempt under subpart G of 40 CFR part 725—Reporting Requirements and Review Processes for Microorganisms. November 7, 1997.

3. EPA, OPPT. Email confirming Novo Nordisk BioChem North America, Inc.'s letter of application to list *Bacillus amyloliquefaciens* as exempt under subpart G of 40 CFR part 725—Reporting Requirements and Review Processes for Microorganisms. August 3, 2009.

4. US EPA. Microorganisms; General Exemptions from Reporting Requirements; Revisions to Recipient Organisms Eligible for Tier I and Tier II Exemptions; Proposed Rule. RIN 2070–AJ65; FRL–9348–1. 77 FR 54499, September 5, 2012. (''2012 Proposed Rule'').

5. EPA, OPPT. Risk Assessment of *Trichoderma reesei* for Consideration of Addition to the List of Eligible Recipient Microorganisms for the 5(h)(4) Exemptions from MCAN Reporting Requirements. October 2011.

6. EPA, OPPT. Risk Assessment of *Bacillus amyloliquefaciens* subsp. *amyloliquefaciens* for Consideration of Addition to the List of Eligible Recipient Microorganisms for the 5(h)(4) Exemptions from MCAN Reporting Requirements. July 2015.

7. Anonymous Public Comment, Document ID: EPA–HQ–OPPT–2011–0740–0015; October 23, 2012.

8. Richard Fitti, West Chester University of PA Comment, Document ID: EPA–HQ–OPPT–2011–0740–0017; November 5, 2012.

9. Anthony T. Pavel, General Counsel & Secretary, Enzyme Technical Association (ETA) and Rina Singh, Director of Policy, Science & Renewable Chemicals, Industrial and Environmental Section, Biotechnology Industry Organization (BIO) Comment, *Document ID EPA–HQ–OPPT–2011–0740–0016;* November 2012.

10. ETA. Supplemental information on *Trichoderma reesei.* January 29, 2010.

11. ETA. Supplemental information on *Trichoderma reesei.* June 16, 2011.

12. Nevalainen, H., P. Suominen, K. Tasimisto. 1994. On the safety of *Trichoderma reesei.* J. Biotechol. 37:193–200.

13. EPA, OPPT. Release and Exposure Assessment in Support of the TSCA Section 5(h)(4) Exemption for *Trichoderma reesei.* June 2011.

14. EPA, OPPT. Release and Exposure Assessment in Support of the TSCA Section 5(h)(4) Exemption for *Bacillus amyloliquefaciens.* June 2011.

15. Legislative History of the Toxic Substances Control Act, pp. 409–423. House Report 1341, 94th Congress, 2nd Session. 1976.

16. EPA. Microbial Products of Biotechnology; Proposed Regulation under the Toxic Substances Control Act. **Federal Register** (59 FR 45526; September 1, 1994) (FRL–4774–4).

17. EPA. Microbial Products of Biotechnology; Final Regulation under the Toxic Substances Control Act. **Federal Register** (62 FR 17910; April 11, 1997) (FRL–5577–2).

18. EPA, OPPT. Economic Analysis for the Final Biotechnology Exemptions Rule for *Trichoderma reesei* and *Bacillus amyloliquefaciens.* October 2019.

XII. Statutory and Executive Order Reviews

Additional information about these statutes and Executive Orders can be found at *http://www2.epa.gov/laws-regulations/laws-and-executive-orders.*

A. Executive Order 12866: Regulatory Planning and Review and Executive Order 13563: Improving Regulations and Regulatory Review

This action is not a significant regulatory action and was therefore not submitted to the Office of Management and Budget (OMB) for review under Executive Orders 12866 (58 FR 51735, October 4, 1993) and 13563 (76 FR 3821, January 21, 2011).

B. Executive Order 13771: Reducing Regulations and Controlling Regulatory Costs

This is considered a deregulatory action under Executive Order 13771 (82 FR 9339, February 3, 2017) because this rule is expected to provide meaningful burden reduction by adding *T. reesei* and *B. amyloliquefaciens* subspecies a*myloliquefaciens* to the list of recipient microorganisms that may be used to qualify for the Tier I and Tier II exemptions from full notification and reporting under TSCA for new microorganisms that are being manufactured for introduction into commerce. The rule is expected to generate cost savings for organizations that, in the absence of the rule, would submit MCANs for new intergeneric *T. reesei* or *B. amyloliquefaciens* strains. EPA estimates that the rule will result in cost savings for both industry and the Agency.

C. Paperwork Reduction Act (PRA)

This action does not impose any new information collection requirements or related burden that would require additional review or approval by OMB under the PRA, 44 U.S.C. 3501 *et seq.* The information collection activities associated with the submission of Tier 1 and Tier 2 notices under TSCA have already been approved by OMB

pursuant to the PRA and are covered by the following existing Information Collection Requests (ICRs): OMB control numbers 2070–0012 (EPA ICR No. 0574.15) and 2070–0038 (EPA ICR No. 1188.11). In granting these exemptions, this rule does not impose any new information collection requirements and is expected to reduce the amount of required reporting by allowing firms to submit less information for qualifying microorganisms. Over the ten-year period, industry is expected to subtract a total of 27,864 hours at an average of 2,786 hours per year.

D. Regulatory Flexibility Act (RFA)

Pursuant to section 605(b) of the RFA, 5 U.S.C. 601 *et seq.,* I certify that this final rule will not have a significant economic impact on a substantial number of small entities. In making this determination, EPA believes that the impact of concern is any adverse economic impact on small entities, and that EPA may certify that a rule will not have a significant economic impact on a substantial number of small entities if the rule relieves regulatory burden, has no net burden or otherwise has a positive economic effect on the small entities subject to the rule. This action establishes exemptions from existing requirements that apply regardless of the size of the entity. The factual basis for this certification is presented in the small entity impact analysis that was prepared as part of the Economic Analysis for this rule (Ref. 18) and is briefly summarized in Unit VIII.

E. Unfunded Mandates Reform Act (UMRA)

This action does not contain an unfunded mandate as described in UMRA, 2 U.S.C. 1531–1538, and does not significantly or uniquely affect small governments. This action is not expected to impose enforceable duty on any state, local or tribal governments, and the requirements imposed on the private sector are not expected to result in annual expenditures of $100 million or more for the private sector. As such, EPA has determined that the requirements of UMRA sections 202, 203, 204, or 205 do not apply to this action.

F. Executive Order 13132: Federalism

This action does not have federalism implications as specified in Executive Order 13132 (64 FR 43255, August 10, 1999). It will not have substantial direct effects on the states, on the relationship between the national government and the states, or on the distribution of power and responsibilities among the various levels of government. EPA has no information to indicate that any state or local government commercially manufactures or processes the microorganisms covered by this action. Thus, Executive Order 13132 does not apply to this action.

G. Executive Order 13175: Consultation and Coordination With Indian Tribal Governments

This action does not have tribal implications as specified in Executive Order 13175 (65 FR 67249, November 9, 2000). It will not have substantial direct effects on tribal governments, on the relationship between the Federal government and the Indian tribes, or on the distribution of power and responsibilities between the Federal government and Indian tribes. EPA has no information to indicate that any tribal government commercially manufactures or processes the microorganisms covered by this action. Thus, E.O. 13175 does not apply to this action.

H. Executive Order 13045: Protection of Children From Environmental Health Risks and Safety Risks

EPA interprets Executive Order 13045 (62 FR 19885, April 23, 1997), as applying only to those regulatory actions that concern health or safety risks, such that the analysis required under section 5–501 of Executive Order 13045 has the potential to influence the regulation. This action is not subject to Executive Order 13045 because it does not establish an environmental standard intended to mitigate health or safety risks.

I. Executive Order 13211: Actions That Significantly Affect Energy Supply, Distribution, or Use

This action is not a ''significant energy action'' as defined in Executive Order 13211 (66 FR 28355, May 22, 2001), because it is not a significant regulatory action under Executive Order 12866, and is not likely to have a significant adverse effect on energy supply, distribution, or use.

J. National Technology Transfer and Advancement Act (NTTAA)

Since this action does not involve any technical standards, NTTAA section 12(d), 15 U.S.C. 272 note, does not apply to this action.

K. Executive Order 12898: Federal Actions to Address Environmental Justice in Minority Populations and Low-income Populations

This action does not entail special considerations of environmental justice related issues as delineated by Executive Order 12898 (59 FR 7629, February 16, 1994), because it does not establish an environmental health or safety standard.

VII. Congressional Review Act (CRA)

This action is subject to the CRA, 5 U.S.C. 801 *et seq.,* and EPA will submit a rule report to each House of the Congress and to the Comptroller General of the United States. This action is not a ''major rule'' as defined by 5 U.S.C. 804(2).

List of Subjects in 40 CFR Part 725

Environmental protection, Administrative practice and procedure, Biotechnology, Chemicals, Hazardous substances, Imports, Labeling, Microorganisms, Occupational safety and health, Reporting and recordkeeping requirements.

Dated: March 4, 2020.

Alexandra Dapolito Dunn,

Assistant Administrator, Office of Chemical Safety and Pollution Prevention.

Therefore, 40 CFR chapter I is amended as follows:

PART 725—[AMENDED]

■ 1. The authority citation for part 725 continues to read as follows:

Authority: 15 U.S.C. 2604, 2607, 2613, and 2625.

■ 2. In § 725.3, add in alphabetical order a definition for ''Submerged standard industrial fermentation'' to read as follows:

§ 725.3 Definitions.

* * * * *

Submerged standard industrial fermentation means a fermentation system that meets all of the following conditions:

(1) Enzyme production is conducted under conditions of submerged fermentation (*i.e.,* growth of the microorganism occurs beneath the surface of the liquid growth medium).

(2) Any fermentation of solid plant material or insoluble substrates, to which *T. reesei* fermentation broth is added after the submerged standard industrial fermentation operations used for enzyme production is completed, may be initiated only after the inactivation of the microorganism as delineated in 40 CFR 725.422(d).

* * * * *

■ 3. In § 725.420, add paragraphs (k) and (l) to read as follows:

§ 725.420 Recipient microorganisms.

* * * * *

(k) *Trichoderma reesei* strain QM6a and its derivatives used only in

submerged standard industrial fermentation operations as defined at 40 CFR 725.3.

(l) *Bacillus amyloliquefaciens* subsp. *amyloliquefaciens.*

[FR Doc. 2020–04746 Filed 3–9–20; 8:45 am]

BILLING CODE 6560–50–P

FEDERAL COMMUNICATIONS COMMISSION

47 CFR Part 54

[WC Docket Nos.19–126, 10–90; FCC 20–5; FRS 16498]

Rural Digital Opportunity Fund, Connect America Fund

AGENCY: Federal Communications Commission.

ACTION: Final rule.

SUMMARY: In this document, the Federal Communications Commission (Commission) adopts the framework for the Rural Digital Opportunity Fund. The Rural Digital Opportunity Fund builds on the Connect America Fund (CAF) Phase II auction, which allocated funds to deploy networks serving more than 700,000 unserved rural homes and businesses across 45 states. The Rural Digital Opportunity Fund represents the Commission's single biggest step to close the digital divide and connect millions more rural homes and small businesses to high-speed broadband networks.

DATES: Effective April 9, 2020, except of §§ 54.313(e), 54.316(a)(8), (b)(5), (c)(1), 54.804 (a) through (c), and 54.806. The Commission will publish a document in the **Federal Register** announcing the effective date of those rules.

FOR FURTHER INFORMATION CONTACT: Alexander Minard, Wireline Competition Bureau, (202) 418–7400 or TTY: (202) 418–0484.

SUPPLEMENTARY INFORMATION: This is a summary of the Commission's Report and Order (Order) in WC Docket Nos. 19–126, 10–90; FCC 20–5, adopted on January 30, 2020 and released on February 7, 2020. The full text of this document is available for public inspection during regular business hours in the FCC Reference Center, Room CY–A257, 445 12th Street SW, Washington, DC 20554 or at the following internet address: *https://www.fcc.gov/document/fcc-launches-20-billion-rural-digital-opportunity-fund-0.*

I. Introduction

1. Bringing digital opportunity to Americans living on the wrong side of the digital divide continues to be the Federal Communication Commission's top priority. It is imperative that the Commission take prompt and expeditious action to deliver on its goal of connecting all Americans, no matter where they live and work. Without access to broadband, rural communities cannot connect to the digital economy and the opportunities for better education, employment, healthcare, and civic and social engagement it provides.

2. In recent years, the Commission has made tremendous strides toward its goal of making broadband available to all Americans. But while the digital divide is closing, more work remains to be done. Therefore, in the Order, the Commission adopts the framework for the Rural Digital Opportunity Fund. It builds on the successful model from 2018's CAF Phase II auction, which allocated $1.488 billion to deploy networks serving more than 700,000 unserved rural homes and businesses across 45 states. The Rural Digital Opportunity Fund represents the Commission's single biggest step to close the digital divide by providing up to $20.4 billion to connect millions more rural homes and small businesses to high-speed broadband networks. It will ensure that networks stand the test of time by prioritizing higher network speeds and lower latency, so that those benefitting from these networks will be able to use tomorrow's internet applications as well as today's.

II. Discussion

3. To ensure continued and rapid deployment of broadband networks to unserved Americans, the Commission establishes the Rural Digital Opportunity Fund, which will commit up to $20.4 billion over the next decade to support up to gigabit speed broadband networks in rural America. The Commission opts to allocate this funding through a multi-round, reverse, descending clock auction that favors faster services with lower latency and encourages intermodal competition in order to ensure that the greatest possible number of Americans will be connected to the best possible networks, all at a competitive cost. In light of the need to bring service both to consumers in areas wholly unserved by 25/3 Mbps, as well as those living in areas partially served, the Commission will assign funding in two phases: Phase I will target those areas that current data confirm are wholly unserved; and, Phase II will target unserved locations within areas that data demonstrates are only partially served, as well as any areas not won in Phase I. By relying on a two-phase process, the Commission can move expeditiously to commence an auction in 2020 for those areas it already knows with certainty are currently unserved, while also ensuring that other areas are not left behind by holding a second auction once the Commission has identified any additional unserved locations through improvements to its broadband deployment data collection.

4. The Rural Digital Opportunity Fund Phase I auction will make use of many of the rules that made the CAF Phase II auction a success, with some exceptions to account for the passage of time and other changed circumstances. Most importantly, in addition to the weighting of performance tiers and latency, the Commission will assign support in the auction's clearing round to the bidder with the lowest weight. After the auction, the Commission will require Phase I support recipients to offer the required voice and broadband service to all eligible homes and small businesses within the awarded areas, without regard to the number of locations identified by the Connect America Cost Model (CAM), and instead as determined subsequently by the Wireline Competition Bureau (the Bureau). This approach differs from that used in the CAF Phase II auction, which tied the deployment and service obligations to a specific number of locations within awarded areas but allowed the recipients to demonstrate that their obligations should be reduced (along with a corresponding reduction in support) where there were fewer locations than the CAM specified. As discussed in the following, the Commission will use its cost model and current data to establish initial service milestones and to monitor interim progress, but the Commission emphasizes that Phase I bidders will be competing for support amounts to offer service to *all* locations ultimately identified in an area, not just to the specific number of locations in that area identified prior to the auction, without adjusting awarded support amounts.

5. The Commission adopts a term of support of 10 years for the Rural Digital Opportunity Fund. The Commission believes that the stability of a 10-year term of support was partially responsible for the robust participation that occurred in the CAF Phase II auction. The Commission expects that the same principles regarding encouraging long-term investments and auction participation will also apply to the Rural Digital Opportunity Fund. Most commenters addressing this issue agree that a 10-year term of support will provide the certainty and stability needed to encourage broadband deployment in unserved and

underserved locations and attract participation from a wide variety of participants. Moreover, disbursing support over a 10-year term minimizes the impact on the contribution factor. The Commission does not agree that adopting a 10-year term risks funding unsustainable projects, as one commenter suggests, because it expects bidders to seek sufficient support to build and maintain their network without an expectation of ongoing support after the 10-year support term expires. Nor does the Commission agree that bidders proposing 25/3 Mbps deployments should be offered only a five-year term. First, given that bids will be weighted to prioritize faster services, the Commission expects bidders seeking support for the 25/3 Mbps tier will win support only in areas where higher speeds are not economical, and that a five-year term may simply increase the amount sought in order to recover the same amount of costs in a shorter timeframe. The Commission also more generally finds no benefit to having multiple terms of support within the same program.

6. The Commission adopts its proposal to establish a budget of $20.4 billion for the Rural Digital Opportunity Fund. The Commission also adopts its proposal to make available $16 billion for Phase I, and to make available for Phase II a budget based on the remaining $4.4 billion, along with any unawarded funds from Phase I. The Commission sought comment on whether it should reassess the adequacy of the budget after the Phase I auction. Although commenters generally supported the proposed budget, several commenters suggested that the size of the budget may be insufficient to serve all the unserved locations and supported reassessing the adequacy of the budget after Phase I. The Commission expects $16 billion to be sufficient, given the areas eligible for Phase I, to balance its objectives of encouraging robust competition for support below the reserve price and closing the digital divide. The Commission agrees that it may be appropriate after the Phase I auction, when it knows the areas eligible for Phase II and how many unserved locations will be eligible for Phase II within those areas, to reassess the total amount of funds available for Phase II and expect to revisit this issue at that time.

7. The Rural Digital Opportunity Fund will target support to areas that lack access to both fixed voice and 25/3 Mbps broadband services in two stages. For Phase I, the Commission targets census blocks that are wholly unserved with broadband at speeds of 25/3 Mbps. For Phase II, the Commission targets census blocks that it later determined through the Digital Opportunity Data Collection, or suitable alternative data source, are only partially served, as well as census blocks unawarded in the Phase I auction. Because the Commission will have an additional opportunity to seek comment on how best to target Phase II support as it gathers more granular data on where broadband has been actually deployed, the Commission focused here on the areas eligible for Phase I of the auction.

8. A number of commenters support moving forward to the extent the Commission can identify unserved areas using existing data. The Commission agrees. The Commission currently has the tools and the data to identify census blocks that are wholly unserved, and directs the Bureau to use the CAM with updated coverage data using the most recent publicly available FCC Form 477 data to identify census blocks that are unserved with broadband at speeds of at least 25/3 Mbps for the auction. The FCC Form 477 data have been criticized for identifying partially served blocks as ''served,'' but the Commission is not aware of cases in which the data has identified as ''unserved'' a census block that is in fact served.

9. The Commission disagrees with commenters who argue that it should delay the auction until it has more granular data. The primary shortcomings of FCC Form 477 data do not come into play under the two-phased framework the Commission adopts here. Thus, the Commission sees no value in denying the benefits of broadband to those rural Americans it knows lacks service because there may be other unserved Americans living in other areas that it has not yet identified. Waiting for the availability of more granular data before moving forward would only further disadvantage those millions of Americans that the Commission knows does not currently have access to digital opportunity.

10. The Commission directs the Bureau to compile a preliminary list of eligible areas for Phase I of the Rural Digital Opportunity Fund auction using the following methodology. First, the Commission will include: (1) The census blocks for which price cap carriers currently receive CAF Phase II model-based support; (2) any census blocks that were eligible for, but did not receive, winning bids in the CAF Phase II auction; (3) any census blocks where a CAF Phase II auction winning bidder has defaulted; (4) the census blocks excluded from the offers of model-based support and the CAF Phase II auction because they were served with voice and broadband of at least 10/1 Mbps; (5) census blocks served by both price cap carriers and rate-of-return carriers to the extent that the census block is in the price cap carrier's territory, using the most recent study area boundary data filed by the rate-of-return carriers to identify their service areas and determine the portion of each census block that is outside this service area; (6) any unserved census blocks that are outside of price cap carriers' service areas where there is no certified high-cost eligible telecommunications carrier (ETC) providing service, such as the Hawaiian Homelands, and any other populated areas unserved by either a rate-of-return or price cap carrier; and (7) any census blocks identified by rate-of-return carriers in their service areas as ones where they do not expect to extend broadband (as the Commission did with the CAF Phase II auction). Not included in these categories for Phase I eligibility are census blocks where a winning bidder in the CAF Phase II auction is obligated to deploy broadband service, and census blocks where a Rural Broadband Experiment support recipient is obligated to offer at least 25/5 Mbps service over networks capable of delivering 100/25 Mbps.

11. Second, the Commission will exclude those census blocks where a terrestrial provider offers voice and 25/3 Mbps broadband service according to the most recent publicly available FCC Form 477 data. In addition, the Commission will exclude those census blocks which have been identified as having been awarded funding through the U.S. Department of Agriculture's ReConnect Program, or awarded funding through other similar federal or state broadband subsidy programs to provide 25/3 Mbps or better service. This is consistent with the Commission's overarching goal of ensuring that finite universal service support is awarded in an efficient and cost-effective manner and does not go toward overbuilding areas that already have service. Although the Commission sought comment on whether there are any other areas that it should include in the initial list of eligible areas, such as areas in legacy rate-of-return areas that are almost entirely overlapped by an unsubsidized competitor, it declines to expand the list of eligible areas at this time and instead focus Phase I on the known wholly unserved census blocks.

12. After compiling the preliminary list of eligible areas, the Bureau will conduct a limited challenge process for the Rural Digital Opportunity Fund Phase I auction consistent with the

process the Bureau used for the CAF Phase II auction. Because there is an inevitable lag between the time when areas are served and the time that service is reflected in publicly available FCC Form 477 data, parties will be given an opportunity to identify areas that have subsequently become served, and the Bureau will have the opportunity to compare the preliminary list of eligible areas with the final list to identify any obvious reporting errors. As discussed in this document, good policy requires the Commission to avoid making limited federal funding available in areas where broadband providers already are receiving support to deploy 25/3 Mbps broadband service. Thus, in order to identify which areas to exclude, the Commission directs the Bureau to provide an opportunity to identify census blocks that have been awarded support by a federal or state broadband subsidy program to provide 25/3 Mbps or better service. The Commission does this to ensure that its auction does not award duplicative or unnecessary support. The Commission does not agree with commenters who argue that a limited challenge process is insufficient and that it should provide a ''robust'' challenge process to identify census blocks that are not actually served, and thus should be eligible for Phase I. The Commission finds that such a challenge process would be administratively burdensome, time-consuming, and unnecessary. In a previous challenge process, the Commission found that it was very difficult to prove a negative—that is, that an area was not served. The Commission also notes that in Phase II, any areas that are reported as served based on its current data but are ultimately deemed unserved will be eligible, and expect that Phase II will occur sooner if Phase I is not delayed by a more burdensome challenge process. The Commission directs the Bureau to release a list and map of initially eligible census blocks based on the most recent publicly available FCC Form 477 data. If more recent FCC Form 477 data is available when the Commission adopts the specific procedures for the Phase I auction, the Bureau should use the more recent data and publish a final list.

13. CAF Phase II support was targeted to ''census blocks where the cost of service is likely to be higher than can be supported through reasonable end-user rates alone'' by using a cost benchmark that reflected the expected amount of revenue that could reasonably be recovered from end users. In the CAF Phase II auction, the Commission included high-cost areas where the CAM estimated the cost per location to exceed $52.50 per month. The Commission departs from that decision here in the Rural Digital Opportunity Fund auction and it will also include some census blocks where the CAM suggests the costs of deployment are below that $52.50 high-cost threshold, but deployment has nonetheless not yet occurred. When the Commission proposed including at least some low-cost blocks, then-current data indicated that 6.3 million locations with costs below a $52.50 per month benchmark still lacked 25/3 Mbps broadband (including 3.4 million locations that lacked even 10/1 Mbps broadband based on staff analysis of current FCC Form 477 data), suggesting that potential end-user revenue alone had not incentivized deployment despite the model's predictions. Therefore, to encourage deployment of high-speed broadband in rural census blocks that are wholly unserved, the Commission will use a lower funding threshold to include blocks where the CAM estimates the cost per location equals or exceeds $40 per month, rather than $52.50. Although some commenters do not agree with providing support in such lower cost areas, the Commission finds that a modest reduction in the funding threshold is warranted given the number of census blocks where market forces alone have been insufficient to bring broadband to these areas.

14. To account for the unique challenges of deploying broadband to rural Tribal communities, the Commission will use a funding threshold of $30 per month. This approach is consistent with the Tribal Broadband Factor established for Tribal areas for carriers that elected model-based rate-of-return support, which used a 25% decrease compared to the $52.50 benchmark. Because the Commission will use a $40 benchmark for the Phase I auction, the $30 benchmark for Tribal areas reflects a 25% decrease compared to the $40 funding threshold. Using a $30 funding threshold for census blocks in Tribal areas, in addition to including blocks below the $40 threshold, has the effect of increasing the reserve price in all Tribal areas by $10 per location. Finally, to provide additional incentives in wholly unserved areas that even lack 10/1 Mbps, the Commission will also use a $30 per month funding threshold in these areas. A number of commenters agree that the Commission should prioritize these areas, and it finds that an increased reserve price could encourage deployment in areas where rural consumers have been left behind.

15. Consistent with the approach the Commission took in the CAF Phase II auction, it adopts a general auction framework and eligibility criteria in the Order and leaves the specific procedures to be established as part of the pre-auction process, including determining auction-related timing and dates, identifying areas eligible for support, and establishing detailed bidding procedures consistent with the Order.

16. *Auction Framework.* For Phase I, the Commission adopts a single nationwide, multi-round reverse auction with competition within and across eligible geographic areas to identify areas that will receive support and determine support amounts, as it did for the CAF Phase II auction. The Commission's experience in the CAF II auction demonstrates that reverse auctions allow for market forces to maximize the impact of finite universal service resources while awarding support to those providers that will make the most efficient use of the budgeted funds. Utilizing an auction mechanism will allow the Commission to distribute support consistent with its policy goals and priorities in a transparent manner. An auction provides a straightforward means of identifying those providers that are willing to provide voice and broadband at a competitive cost to the Fund, targeting support to prioritized areas, and determining support levels that awardees are willing to accept in exchange for the obligations the Commission imposes. Moreover, a reverse auction is consistent with the Commission's decision to provide support to at most one provider per area.

17. Commenters broadly support the use of a reverse auction to distribute Rural Digital Opportunity Fund support. For example, commenters state that based on the success of the CAF Phase II auction, reverse auctions can be expected to produce robust deployment cost-effectively. The Nebraska Public Service Commission, on the other hand, raised concerns that a reverse auction focuses on ''the cheapest way to get to the minimum speed of a given speed tier to a coverage area'' rather than ''focusing on robust and scalable technology.'' The Commission disagrees. As demonstrated in CAF Phase II, reverse auctions are the best available tool to achieve the Commission's overall goal of closing the digital divide in a transparent and efficient manner while maintaining fiscal responsibility and cost-

effectiveness. Moreover, in most instances, CAF Phase II winning bidders agreed to provide a higher speed than the minimum; thus, the Commission was able to push finite universal service support to many more locations at a much lower cost and higher speeds. The Commission therefore maintains that a reverse auction is the most efficient means of awarding Rural Digital Opportunity Fund support, consistent with its goal of supporting the buildout of the best possible networks in the most cost-effective manner possible.

18. Similar to the CAF Phase II auction, the Commission adopts an auction design in which bidders committing to different performance levels will have their bids weighted to reflect its preference for higher speeds, greater usage allowances, and lower latency. However, in addition to the weights for each performance tier and latency combination adopted in the following, the Commission adopts bid processing procedures specific to the ''clearing round'' of the Rural Digital Opportunity Fund Phase I auction. In the clearing round, the bidding system will take into account the combined performance tier and latency weight when assigning support to bidders competing for support in the same area at the base clock percentage. Among other modifications to the procedures used in the CAF II auction, the bidding system will assign support in the clearing round to the bidder with the lowest performance tier and latency weight instead of, as was done in the CAF II auction, carrying forward all bids at the base clock percentage for the same area for bidding in additional clock rounds. If two or more bids were submitted with the same lowest performance tier and latency weight in the clearing round, bidding for an area will continue in additional clock rounds.

19. In the CAF II auction, the Commission adopted an auction that considered all bids simultaneously, ''so that bidders that propose to meet one set of performance standards will be directly competing against bidders that propose to meet other performance standards.'' In the Rural Digital Opportunity Fund auction, the Commission will continue to accept bids committing to different performance levels. In Phase I, however, once the budget has cleared, the Commission will prioritize bids with lower tier and latency weights, thereby encouraging the deployment of networks that will be sustainable even as new advancements are made and which will be capable of delivering the best level of broadband access for many years to come, all while keeping funding within the Phase I budget. Although this approach could result in less intra-area competition after the clearing round in some areas, the auction will have selected the best possible service, at a competitive level of support, for the same number of consumers living in those areas, and this will result in more rapid and efficient funding for such deployment. In other words, the Commission's goal to close the digital divide is balanced against its goal to support the deployment of future-proof networks by this auction. Overall, the Commission does not expect this approach to adversely impact competition. The Commission will still accept competitive bids proposing to offer performance that meets or exceeds the minimums at each performance tier and latency, but for those areas where there is still competition as of the clearing round, the Commission will prioritize selection of bidders that propose to offer the highest speeds, most usage, and lowest latency for each area.

20. The Commission also adopts the same general competitive bidding rules, which allow for the subsequent determination of additional, specific final auction procedures based on additional public input during the pre-auction process, and the Commission will apply as appropriate any modifications to those rules that it may adopt. Those competitive bidding rules, together with the additional rules the Commission adopts in this document, will establish Rural Digital Opportunity Fund winning bidders' performance obligations, eligible areas, and post-auction obligations and oversight. As it typically does for Commission auctions, the Commission will seek further comment on auction procedures at a future date, so it does not address the comments in the Order that speak to those issues. A number of commenters propose specific changes to the auction that would be better evaluated during the process to develop detailed auction procedures.

21. *Reserve Prices.* Consistent with the CAF Phase II auction procedures, the Commission will use the CAM to establish area-specific reserve prices. The Commission makes several adjustments to its approach in the CAF II auction to include some unserved areas that were excluded from the CAF Phase II auction and to potentially provide additional funding to extremely high-cost areas. Specifically, the Commission concludes it is appropriate to reduce the high-cost support threshold to $40 per location. The Commission also increases the per-location support cap to $212.50. This approach will add additional locations above the new threshold and increase inter-area bidding. Finally, the Commission will prioritize areas entirely lacking 10/1 Mbps and Tribal areas by further lowering the funding threshold for such areas by 25% to $30.

22. The reserve price in each wholly-unserved, eligible census block will be equal to the average per-location cost of deploying and operating a network (as calculated by the CAM) above the $40 support threshold and up to the per-location support cap of $212.50, multiplied by the number of locations in the block. Lowering the support threshold from $52.50 to $40 per locations will provide support to unserved areas in which the CAM may be understating costs, while still being cognizant about not offering support in areas market forces alone are likely to extend broadband. The Commission previously determined that a CAM-calculated average per-location cost of $52.50 reflected an appropriate line between areas requiring support and those where market forces would be sufficient. Where some areas have not yet seen unsubsidized deployment of broadband networks, it could be an indication that the assumptions underlying the CAM do not always reflect the reality facing service providers, and the Commission now concludes it is appropriate to revisit the high-cost threshold. Likewise, the Commission increases the per-location support cap to ensure that the highest-cost areas, many of which did not receive winning bids in the CAF II auction, will see sufficient interest from bidders in the Rural Digital Opportunity Fund. Thus, the Commission will set the reserve price based on a lower support threshold of $40 for all areas and raise the per-location support cap from $146.10 to $212.50, ultimately helping promote participation and competition in the Rural Digital Opportunity Fund Phase I auction.

23. The Commission's goal with this auction is to target support and provide incentives to serve areas that are known to currently lack service at speeds of at least 25/3 Mbps. Whereas the CAF Phase II auction targeted support to high-cost areas where the incumbent price cap carrier declined the offer of model-based support and extremely high-cost areas nationwide, here the Commission expands its focus to include certain areas that remain unserved despite being identified by the CAM as lower cost. As the Commission stated in the *Rural Digital Opportunity Fund NPRM,* 84 FR 43543, August 21, 2019, the new lower support threshold

of $40 will ensure that only census blocks above the new support threshold will be eligible for the auction. Buckeye Hills Regional Council asserts that the Commission should lower the cost threshold to $20 or $30 for difficult to serve parts of the country such as Appalachia. However, lowering the threshold any further than $40 would provide more support than needed and many locations could be included that are more likely to be served without universal service support.

24. Certain commenters oppose including unserved low-cost census blocks in Phase I of the auction, raising concerns that the auction would shift funding to more densely populated areas at the expense of more rural consumers and census blocks. The Commission notes that these areas remain unserved, despite being identified as low cost by CAM more than five years ago. Moreover, the Commission is lowering the support threshold in all eligible census blocks, thereby increasing reserve prices (and potentially available support) throughout. The Commission declines to adopt NCTA's proposal to reduce the cost threshold only to account for the costs of upgrading an already deployed network capable of providing 10/1 Mbps to one capable of providing 25/3 Mbps,'' to ''ensure the . . . fund does not . . . pay more than necessary to serve these areas.'' The Commission disagrees. NCTA's approach focuses on areas that already have 10/1 Mbps but not 25/3 Mbps and presumes that the existing provider would be the auction winner. While an existing provider should in many cases be able to seek less support from the auction in order to upgrade existing facilities, it may ultimately be more efficient for a new provider to serve that same biddable unit with new facilities, in addition to serving neighboring areas that lack 10/1 Mbps broadband services.

25. The Commission also adopts its proposal in the *Rural Digital Opportunity Fund NPRM* to prioritize census blocks that lack 10/1 Mbps over eligible census blocks that have 10/1 Mbps service, but lack service at 25/3 Mbps based on Form 477 data. Specifically, the Commission accomplishes this by reducing the support threshold for such census blocks by an additional 25% to $30, which will have the effect of raising the support cap for these blocks to $222.50. Some commenters support prioritizing areas that lack 10/1 Mbps and some suggest the reserve prices in such areas should be increased to incentivize bidders in those areas. USTelecom opposes focusing first on areas that lack 10/1 Mbps stating that it would be difficult to implement ''absent mapping'' and due to ongoing CAF Phase II deployment. Pacific Dataport objects to a 10/1 Mbps prioritization and argues it is a ''desperate attempt to force-fit a terrestrial solution whether or not the economics make sense.'' The Commission disagrees with both commenters. As stated in this document, the Commission has the data to identify census blocks that are wholly unserved by broadband speeds of at least 10/1 Mbps and are not aware of cases where Form 477 data have identified as ''unserved'' a census block that is in fact served. One of the Commission's goals in this proceeding is to provide incentives to serve locations that lack any terrestrial option. Prioritizing areas that lack 10/1 entirely is consistent with the Commission's statutory mandate that such services are deployed to areas lacking broadband and makes sure this auction does not leave on the wrong side of the digital divide those areas lacking even basic broadband access.

26. For Tribal areas, the Commission similarly adopts the Tribal Broadband Factor as a 25% decrease, to $30, of the support threshold applied to Tribal areas. More specifically, with regard to census blocks located within the geographic area defined by the boundaries of the Tribal land, all eligible census blocks for which the CAM-derived cost is more than $30 will be included in the auction, and the reserve price for such blocks will be the CAM-derived cost minus $30, up to a per-location support cap of $222.50. The Commission recognizes the difficulty Tribal lands have faced in obtaining broadband deployment, and by incorporating this Tribal Broadband Factor, the Commission seeks to incentivize network buildout to ensure that Tribal Nations and their members obtain access to advanced communications services. The record before the Commission provides ample support for adopting a 25% decrease of the cost benchmark to incentivize Rural Digital Opportunity Fund participants to bid on and serve rural Tribal census blocks. A Tribal Broadband Factor will attach to the eligible Tribal areas, and thus reflect the additional cost of serving Tribal lands. While the Commission remains committed to promoting deployment on Tribal lands, it declines to extend a Tribal-specific preference to Tribal entities or to require a nontribal entity to ''prove an established partnership'' prior to the auction. The Commission concludes that it serves the public interest to maximize participation, and to award support to the most cost-effective bids, subject to the performance and latency weights it adopts in the following.

27. *Bidding Credits.* The Commission declines to adopt bidding credits for offsetting bidding weights or committing to certain buildout requirements, as proposed by some bidders. Adopting bidding credits to reward bidders for simply having met prior regulatory obligations, for example, would be contrary to the competitive nature of the auction, and, could ultimately reduce the potential reach of the Rural Digital Opportunity Fund. While the Commission declines to adopt a Tribal bidding credit, in this document, it has incorporated into the reserve prices for Tribal lands a Tribal Broadband Factor, similar to what the Commission previously incorporated into the recent offer of model-based support to rate-of-return carriers serving Tribal lands, which will reflect the higher costs unique to deploying service on Tribal lands that may not otherwise already be included in the CAM, and satisfy the Commission's goal of bridging the digital divide.

28. *Minimum Geographic Area for Bidding.* The Commission concludes that the minimum geographic area for bidding will be no smaller than a census block group, as identified by the U.S. Census Bureau, containing one or more eligible census blocks. As the Commission determined in the *CAF Phase II Procedures PN,* using census block groups ensures that all interested bidders, including small entities, have flexibility to design a network that matches their business model and the technologies they intend to use. Nevertheless, as the Commission did in the CAF Phase II auction, it reserves the right to select census tracts, or other groupings of areas, when it finalizes the auction design if necessary to limit the number of discrete biddable units. While some commenters support bidding based on eligible census blocks, the Commission declines to adopt individual census blocks as the minimum geographic area for bidding because of the significantly larger number of eligible census blocks, increasing the complexity of the bidding process both for bidders and the bidding system and minimizing the potential for broad coverage by winning bidders. Furthermore, using census blocks as the minimum geographic area could create more challenges for providers in putting together a bidding strategy that aligns with their intended network construction or expansion.

29. The Commission adopts technology-neutral standards for voice

and broadband services supported by the Rural Digital Opportunity Fund, based on its experience in the CAF Phase II auction and its success in awarding support to a variety of service providers to deploy broadband in unserved rural areas, and consistent with long-standing Commission policy. Specifically, the Commission will permit bids in four performance tiers, and for each tier will differentiate between bids that would offer either low- or high-latency service. The Minimum performance tier means 25/3 Mbps with a usage allowance that is the greater of 250 GB per month or the average usage of a majority of fixed broadband customers as announced by the Bureau on an annual basis; the Baseline performance tier means 50/5 Mbps speeds with a 250 GB monthly usage allowance or a monthly usage allowance that reflects the average usage of a majority of fixed broadband customers as announced by the Bureau on an annual basis, whichever is higher; the Above-Baseline performance tier means 100/20 Mbps speeds with 2 TB of monthly usage; and the Gigabit performance tier means 1 Gbps/500 Mbps speeds with a 2 TB monthly usage allowance. The Commission adopts 250 GB as the minimum monthly usage allowance for the Baseline performance tier rather than the 150 GB as proposed because based on Measuring Broadband America October 2018–September 2019 usage data, the average monthly usage for fixed broadband customers is 251.45 GBs per month.

30. Low- or high-latency bids will be required to meet the same latency requirements as the CAF Phase II auction high- and low-latency bidders. Low latency means 95% or more of all peak period measurements of network round trip latency are at or below 100 milliseconds, and high latency means 95% or more of all peak period measurements of network round trip latency are at or below 750 milliseconds and a demonstration of a score of 4 or higher using the Mean Opinion Score with respect to voice performance.

31. The Commission maintains a Minimum performance tier for the Rural Digital Opportunity Fund but increase the speed from 10/1 Mbps to 25/3 Mbps. In the CAF Phase II auction, winning bids in a Minimum performance tier, which required only 10/1 Mbps broadband, covered less than 1% of locations awarded support. The record generally supports eliminating the 10/1 Mbps performance tier. Although the Navajo Nation and the Navajo Nation Telecommunications Regulatory Commission (NNTRC) request that the Commission establish a 10/1 Mbps bidding tier for Indian Country because costs of deploying 25/3 Mbps on reservations may discourage bidders, they provided no specific, detailed information about differences in cost. Moreover, allowing another performance tier only in certain areas would complicate the bidding system and the Commission believes the Tribal Broadband Factor will be sufficient to increase support on Tribal lands and incent providers to bid on Tribal lands.

32. Some commenters argue that a Baseline tier of 25/3 Mbps is too low and the Commission should establish a higher speed tier as the minimum eligible for the auction, or that bidders proposing 25/3 Mbps should be required to deploy to all locations in three years and receive only five years of support. Although the Commission has a preference for higher speeds, it recognizes that some sparsely populated areas of the country are extremely costly to serve and providers offering only 25/3 Mbps may be the only viable alternative in the near term. Accordingly, the Commission declines to raise the required speeds in the Minimum tier and it is not persuaded that bidders proposing 25/3 Mbps should be required to build out more quickly or have their support term reduced by half.

33. Several others argue that the Commission should include a fourth performance tier between the Minimum and Gigabit tiers, some suggesting a tier between 25/3 Mbps and 100/20 Mbps, and others suggesting a tier between 100/20 Mbps and the Gigabit tier. The Commission agrees, and accordingly, add an additional performance tier. The Commission finds that allowing bidders to offer 50/5 Mbps service is ''critical to reaching the truly high-cost areas in a cost effective way'' while meeting the ''immediate broadband needs'' of consumers today. Adding a performance tier at 50/5 Mbps furthers the Commission's goal of incentivizing providers to deploy networks that will deliver services that consumers need today as well as in the future, but also ensures Minimum speed service will be available in the hardest to serve areas.

34. The Commission declines to make any modifications to its two latency tiers. Some commenters propose a third, very low-latency tier. Commenters have provided no persuasive evidence that suggests technologies meeting latency standards below 100 milliseconds would have such a material benefit for consumers when compared to services meeting the Commission's existing long-standing low-latency requirements that it should potentially divert support to those lower-latency technologies and would not expect consumers to notice the lower latency that would make it worth weighting the auction differently. The Commission notes that providers are encouraged to offer service that improves upon the Commission's minimum tier thresholds.

35. Satellite providers argue that the Commission's existing latency tiers do not account for certain satellites capable of providing lower latency, and that the high-latency weight discourages hybrid networks. SES Americom, which offers middle-mile capacity on its satellites to telecommunications carriers, argues its medium earth orbit satellites can provide broadband service with a latency between 120 milliseconds and 150 milliseconds. Viasat and Hughes ask that the Commission permits a provider to qualify at the low-latency weight if it demonstrates a mean opinion score of 4 or more for VoIP service and routes latency-sensitive traffic over links in which 95% or more of all peak period measurements of network round trip latency are at or below 100 milliseconds. Although medium earth orbit satellites and hybrid satellite technologies have the potential to deliver high-speed broadband to previously unserved rural areas, these technologies have not been deployed widely to deliver service to residential consumers; therefore, it would be premature to modify the Commission's latency standards based on the record to qualify these technologies in the Phase I auction to bid with a lower-latency weight, or add an additional interim latency weight. This decision does not preclude the Commission from reconsidering the feasibility of modifying latency standards to accommodate medium earth orbit satellite and hybrid satellite technologies for Phase II of the Rural Digital Opportunity Fund.

36. As in the CAF Phase II auction, the Commission adopts weights that reflect its preference for higher speeds, higher usage allowances, and low latency. The Commission also anticipates that terrestrial fixed networks will likely result in significant fiber deployment that can serve as a backhaul for rural 5G networks. Accordingly, the Commission chooses performance tier and latency weights to encourage the deployment of higher speed, low-latency services. Specifically, the Commission adopts weights of 50 for the Minimum performance tier, 35 for the Baseline performance tier, 20 for the Above Baseline performance tier, and 0 for the Gigabit performance tier, as well as a weight of 40 for high-latency bids and 0 for low-latency bids to favor higher-

than Baseline speeds and low-latency services. Under the descending clock auction format the Commission will use the weights, when subtracted from the clock percentage for the round, to indicate the percentage of an area's reserve price that a winning bidder would receive in per-location support for serving the locations in that area.

37. The following charts summarize the Commission's approach:

PERFORMANCE TIERS, LATENCY, AND WEIGHTS

Minimum	≥25/3 Mbps	≥250 GB or U.S. average, whichever is higher.	50
Baseline	≥50/5 Mbps	≥250 GB or U.S. average, whichever is higher.	35
Above Baseline	≥100/20 Mbps	≥2 TB	20
Gigabit	≥1 Gbps/500 Mbps	≥2 TB	0

Low Latency	≤100 ms	0
High Latency.	≤750 ms & MOS ≥4	40

38. The Commission declines to modify the 90-point maximum spread between the tiers that the Commission used in the CAF II auction. Many commenters argued that the Commission should increase the 90-point spread between the highest and lowest tiers to favor higher speeds even more. Others argue that the Commission should narrow the weighting spread. Although the Commission does value higher speed services, it also recognizes that different technologies may be better suited for different areas. Based on the Commission's experience with the CAF Phase II auction and its weights, the Commission believes the weights it adopts will provide an opportunity for providers using various technologies to participate in the auction and to compete for appropriate levels of support while providing a minimum level of service to consumers in all awarded areas.

39. The Commission adopts its proposal to establish a weight of 40 points as the weight for high-latency services, which is an increase from the CAF Phase II weight of 25. Satellite providers oppose increasing the weight for high latency. Viasat claims that substantially increasing the latency weight would effectively preclude meaningful participation by geostationary orbit (GSO) satellite providers in the auction and would give Viasat and other GSO satellite providers virtually no chance of participating successfully. Moreover, Viasat argues that increasing the latency weight would significantly reduce the number of supported locations, leaving behind areas where no terrestrial provider bids, and substantially increase the average per-location subsidies in areas where terrestrial providers do bid. On the other side, several commenters argue the Commission should assign an even greater weight to high-latency bids. USTelecom argues that satellite broadband service is not a bridge to next-generation 5G broadband services and suggests that the Commission exclude satellite from bidding in the Phase I auction, or at a minimum, increase the high-latency weighting to 60. The Commission's decision to introduce a more moderate increase to the high-latency weight reflects the importance of latency to interactive, real-time applications and voice services, as well as the secondary benefits of terrestrial facilities, but also recognizes the importance of allowing all technologies the ability to participate in the auction and offer service to unserved areas. Moreover, adopting a fourth performance tier will moderate some of the effects of the *Rural Digital Opportunity Fund NPRM's* proposed weights. The 90-point spread the Commission adopts in this document will allow high-latency bidders to compete for appropriate levels of support in a much larger auction.

40. All Rural Digital Opportunity Fund support recipients, like all other high-cost ETCs, will be required to offer standalone voice service and offer voice and broadband services at rates that are reasonably comparable to rates offered in urban areas. Some commenters urge the Commission to eliminate the standalone voice requirement. WISPA argues that RDOF recipients should not be required to offer standalone voice service, because, consumers increasingly are subscribing to voice as a component of their broadband connections. SpaceX claims the standalone voice requirement is no longer useful for nearly all consumers because Americans no longer choose to buy standalone voice, and the requirement adds costs to develop and make available voice equipment and provide voice-specific customer support. GeoLinks urges the Commission to simply require that auction winners offer a voice service option, which can be available via a service bundle. The National Association of Counties states that ''unfortunately, the unintended consequence of this requirement would prevent willing and able entities from providing high-speed broadband internet services solely because they do not provide voice services in addition to broadband.''

41. Section 254 of the Communications Act of 1934, as amended, gives the Commission the authority to support telecommunications services, which the Commission has defined as ''voice telephony service.'' The Commission made clear when it adopted the standalone voice requirement as a condition of receiving Connect America Fund support in 2011 that the definition of the supported service, voice telephony service, is technologically neutral, allowing ETCs to provision voice service over many platforms. When it adopted the broadband reasonable rate comparability requirement in 2014, the Commission explained that ''high-cost recipients are permitted to offer a variety of broadband service offerings as long as they offer at least one standalone voice service plan and one service plan that provides broadband that meets the Commission's requirements.'' In 2018, the Commission dismissed requests to eliminate the standalone voice requirement. The Commission reasoned that auction funding recipients, unlike funding recipients of other USF mechanisms, ''may be the only ETC offering voice in some areas and not all consumers may want to subscribe to broadband service.'' The record does not show that these facts have changed, and voice telephony is still the supported service. Therefore, the Commission requires all ETCs receiving Rural Digital Opportunity Fund support to provide standalone voice service meeting the reasonable comparability requirements in the areas in which they receive support.

42. Some commenters suggest that the Commission adopts additional public interest obligations. For example, the Schools, Health & Libraries Broadband Coalition argues that the Commission should specifically require recipients of Rural Digital Opportunity Fund support to deploy high-quality broadband to

anchor institutions in their service territories. The California Emerging Technology Fund argues that the Commission should require every provider to propose a low-income package with a rate not to exceed $20. The Commission notes that support recipients, like all high-cost ETCs, will be required to report annually the number of anchor institutions to which they newly began providing service and to comply with all relevant Lifeline rules. Additional obligations regarding anchor institutions and low-income subscribers are more properly addressed in the Commission's other universal service programs.

43. The Commission adopts interim service milestones for the Rural Digital Opportunity Fund that are based on those the Commission adopted for the CAF Phase II auction for monitoring progress in meeting deployment obligations. The Commission will require support recipients to commercially offer voice and broadband service to 40% of the CAM-calculated number of locations in a state by the end of the third full calendar year following funding authorization, and 20% each year thereafter. The Commission modifies that approach, however, in the way it accounts for possible disparities between the CAM location counts and the actual number of locations in a winning bidder's service territory in a state. Although initial service milestones will be based on the number of locations identified by the CAM, the Commission is confident that it will have access to more accurate location data in the next few years, whether as a result of the Digital Opportunity Data Collection, the development of a broadband serviceable location database, the 2020 Census and/or some other data source. The Commission concludes that winning bidders will be required to serve the number of locations subsequently identified in each respective area. The Commission is persuaded by commenters who argue that the costs of building and operating broadband networks are predominantly governed by the size and characteristics of the areas served rather than the precise number of locations. The Commission accordingly directs the Bureau to seek comment on the updated location data and publish revised location counts no later than the end of service milestone year six, which the Commission expects to be 2027. The Commission will then use the new location counts to determine whether a Rural Digital Opportunity Fund support recipient offers the required voice and broadband service throughout the designated area by the end of milestone year eight.

44. The Commission takes this approach because the record reflects considerable concern about the proposed pro rata reductions in a winning bidder's support if, ultimately, there are fewer locations than originally identified by the Commission. For the CAF Phase II auction, the Commission created a process to facilitate appropriate adjustments to the defined deployment obligations, with associated support reductions, and delegated the implementation of this process to the Bureau. Most commenters in this proceeding oppose the pro rata support reductions, and argue that the Commission should not penalize support recipients when the location data used to establish milestones overstates the number of locations in an area. The Commission agrees and will not reduce support if the Bureau's updated location counts indicate fewer actual locations in the awarded areas in most circumstances.

45. Location counts in the CAM are based on 2011 Census data and the Commission recognizes that there may be some disparity between the number of locations identified before the auction occurs and the ''facts on the ground.'' Moreover, circumstances may change before the end of the 10-year support term. Some rural areas may experience a decrease in population, and in other areas new housing developments may be built. By requiring build-out to the entire designated area even in light of the possibility that location numbers could change, the Commission seeks to ensure the availability of broadband and voice services to as many rural consumers and small businesses within the Phase I auction areas by the end of the ten-year term as possible.

46. Until the Bureau adopts new location counts, the Commission will measure compliance with service milestones against the CAM location counts across the awarded areas for each Phase I support recipient. The Commission will require support recipients to commercially offer voice and broadband service to 40% of the CAM-calculated number of locations in a state by the end of the third full calendar year following funding authorization, and 20% each year thereafter, consistent with the CAF Phase II deployment obligations. In the following, the Commission explains how service milestones will be revised in various circumstances after the Bureau gathers more accurate location counts.

47. *More Locations.* After the Bureau adopts updated location counts, in areas where there are more locations than the number of CAM locations, the Commission will not require a support recipient to commercially offer voice and qualifying broadband to 100% of the new number of locations until year eight. The Commission will continue to use the CAM location counts to measure compliance with interim service milestones up to 100% of the CAM locations by the end of the sixth calendar year. If there are more new locations than CAM locations, recipients should be able to meet those milestones, and measuring compliance against the new number of locations later in the term will give carriers the opportunity to revise and update deployment plans after the Bureau announces the new number of locations. The Commission does not adopt an interim milestone for the end of year seven, although carriers will be required to report to Universal Service Administrative Company (USAC), consistent with current high-cost rules, any locations deployed in that calendar year. Support recipients will be required to offer service to 100% of the new location count by the end of year eight. Carriers for which the new location count exceeds the CAM locations within their area in each state by more than 35% will have the opportunity to seek additional support or relief from the Commission.

48. Any such ETC with increased deployment obligations may also seek to have its new location count adjusted to exclude additional locations, beyond the number identified by CAM, that it determines before the end of year eight are ineligible (*e.g.,* are not habitable), unreasonable to deploy to (*e.g.,* if it would require a carrier to install new backhaul facilities or other major network upgrades solely to provide broadband to that location), or part of a development newly built after year six for which the cost and/or time to deploy before the end of the support term would be unreasonable.

49. *Fewer Locations.* In areas where there are fewer locations than CAM locations, a support recipient must notify the Bureau no later than the March 1 following the fifth year of deployment. Upon confirmation by the Bureau, the Commission will require support recipients to reach 100% of the new number by the end of the sixth calendar year. While planning and deploying its network, a support recipient that discovers there are not enough locations to even meet its service milestones in years three and four, which are based on the number of CAM locations, should seek a waiver from the Bureau. Carriers for which the

new location count is less than 65% of the CAM locations within their area in each state shall have their support amount reduced on a pro rata basis by the number of reduced locations.

50. *Newly Built Locations.* In addition to offering voice and broadband service to the updated number of locations identified by the Bureau, the Commission requires support recipients to offer service on reasonable request to locations built subsequently. Support recipients are not obligated to offer service to these newly built locations that do not request service, or to those with exclusive arrangements with other providers. Assuming a two-year deployment cycle, support recipients similarly are not required to deploy to any locations built after milestone year eight.

51. The Commission aligns the service milestones and related reporting deadlines with those of other high-cost programs to minimize the administrative burdens on the Commission, USAC, and support recipients. Regardless of when a Rural Digital Opportunity Fund recipient is authorized to begin receiving support, each service milestone will occur on December 31. The Commission acknowledges that, by aligning the service milestones, some Rural Digital Opportunity Fund support recipients likely will have more than three years to complete their 40% milestone. CenturyLink suggests that the Commission authorize funding for all winning bidders to begin on January 1, 2022 to align all Rural Digital Opportunity Fund support recipients on calendar year basis for receipt of support and corresponding obligations. The Commission finds that its method of aligning service milestones is preferable because it establishes December 31 as the service milestone date for all participants regardless of authorization date but still allows the Commission to authorize support for a participant and thus to begin broadband deployment in unserved areas as soon as possible.

52. The Commission concludes that a support recipient will be deemed to be commercially offering voice and/or broadband service to a location if it provides service to the location or could provide it within 10 business days upon request. All ETCs must advertise the availability of their voice services through their service areas, and the Commission requires support recipients also to advertise the availability of their broadband services within their service area. Compliance with service milestone requirements will be determined on a state-level basis, so that a support recipient would be in compliance with a service milestone if it offers service meeting the relevant performance requirements to the required percentage of locations across all of the awarded areas included in its winning bids in a state.

53. The Commission also sought comment on whether it should require support recipients to build out more quickly earlier in their support terms by offering voice and broadband to 50% of the requisite number of locations in a state by the end of the third year. A few commenters supported an accelerated buildout schedule, while the Navajo Nation and NNTRC asked the Commission to extend build-out milestones on Tribal Lands to recognize the difficulty in deploying infrastructure in Indian Country. Upon consideration, the Commission finds that using the same interim milestones as in the CAF II auction strikes the appropriate balance and, thus, adopts the identical first service milestone that it used there. Recipients have ample incentive to reach their buildout milestones as quickly as possible to increase their subscribership and revenues. However, the Commission also recognizes that deploying broadband in some areas will be more challenging than in others and may require all the time allowed by the deployment milestones.

54. To ensure that support recipients are meeting their deployment obligations, the Commission adopts essentially the same reporting requirements for the Rural Opportunity Digital Fund that it adopted for the CAF Phase II auction. Consistent with the Commission's decision in this document to align the interim service milestones, it requires Rural Digital Opportunity Fund support recipients to file annually location and technology data in the HUBB at the same time and to make the same certifications when they have met their service milestones. The Commission also amends section 54.316 of its rules to require all Rural Digital Opportunity Fund support recipients, as all high-cost support recipients currently do, to file their annual location data in the HUBB by March 1, and the Commission encourages them to file such data on a rolling basis.

55. The Commission also requires Rural Digital Opportunity Fund support recipients to file the same information in their annual FCC Form 481s that it requires of the CAF Phase II auction support recipients. Specifically, in addition to the certifications and information required of all high-cost ETCs in the FCC Form 481, Rural Digital Opportunity Fund support recipients will be required to certify each year after they have met their final service milestone that the network they operated in the prior year meets the Commission's performance requirements. In addition, they will be required to identify the number, names, and addresses of community anchor institutions to which they newly began providing access to broadband service in the preceding calendar year as well as identify the total amount of support that they used for capital expenditures in the previous calendar year. Moreover, support recipients will need to certify that they have available funds for all project costs that will exceed the amount of support they will receive in the next calendar year. Finally, Rural Digital Opportunity Fund support recipients will be subject to the same annual section 54.314 certifications, the same record retention and audit requirements, and the same support reductions for untimely filings as all other high-cost ETCs.

56. In the event a support recipient does not meet a service milestone, the Commission adopts the same non-compliance measures that are applicable to all high-cost ETCs, the same framework for support reductions applicable to high-cost ETCs that are required to meet defined service milestones, and the same process the Commission adopted for drawing on letters of credit for the CAF Phase II auction. The Commission also adopts additional non-compliance measures for a support recipient that fails to meet its third-year service milestone by more than 50%. Specifically, the Commission relies on the following non-compliance tiers (which are described in more detail in section 54.320 of the Commission's rules):

NON-COMPLIANCE FRAMEWORK

Tier 1: 5% to less than 15% of the required number of locations	Quarterly reporting.
Tier 2: 15% to less than 25% of the required number of locations	Quarterly reporting + withhold 15% of monthly support.
Tier 3: 25% to less than 50% of the required number of locations	Quarterly reporting + withhold 25% of monthly support.

NON-COMPLIANCE FRAMEWORK—Continued

Tier 4: 50% or more of the required number of locations	Quarterly reporting + withhold 50% of monthly support for six months; after six months withhold 100% of monthly support and recover percentage of support equal to compliance gap plus 10% of support disbursed to date.

57. A support recipient will have the opportunity to move tiers as it comes into compliance and will receive any withheld support as it increases build-out and moves from one of the higher tiers (*i.e.,* Tiers 2–4) to Tier 1 status during the build-out period. If a support recipient misses the six year or eight year service milestone as applicable, it will have 12 months from the date of the service milestone deadline to come into full compliance.

58. Given that the Commission is modifying the service deployment milestones to account for the Bureau's updated location counts, the Commission makes commensurate modifications to the consequences if an ETC does not come into full compliance after the grace period for its sixth-year service milestone or, for an ETC with a new location count that is greater than its CAM location count, its eighth-year service milestone. At the sixth-year service milestone, support will be recovered as follows: (1) If an ETC has deployed to 95% or more of the CAM location count, or of the adjusted CAM location count if there are fewer locations, but less than 100%, USAC will recover an amount of support that is equal to 1.25 times the average amount of support per location received in the state for that ETC over the support term for the relevant number of locations; (2) if an ETC has deployed to 90% or more of the CAM location count, or of the adjusted CAM location count if there are fewer locations, but less than 95%, USAC will recover an amount of support that is equal to 1.5 times the average amount of support per location received in the state for that ETC over the support term for the relevant number of locations, plus 5% of the support recipient's total Rural Digital Opportunity Fund support authorized over the ten-year support term for that state; and (3) if an ETC has deployed to fewer than 90% of the CAM location count, or of the adjusted CAM location count if there are fewer locations, USAC will recover an amount of support that is equal to 1.75 times the average amount of support per location received in the state for that ETC over the support term for the relevant number of locations, plus 10% of the support recipient's total Rural Digital Opportunity Fund support authorized over the ten-year support term for that state.

59. If the ETC's new location count is greater than its CAM location count, and recognizing the increased obligations of such ETCs, support will be recovered as follows if the ETC does not meet the eighth year service milestone: (1) If an ETC has deployed to 95% or more of its new location count, but less than 100%, USAC will recover an amount of support that is equal to the average amount of support per location received in the state for that ETC over the support term for the relevant number of locations; (2) if an ETC has deployed to 90% or more of its new location count, but less than 95%, USAC will recover an amount of support that is equal to 1.25 times the average amount of support per location received in the state for that ETC over the support term for the relevant number of locations; (3) if an ETC has deployed to 85% or more of its new location count, but less than 90%, USAC will recover an amount of support that is equal to 1.5 times the average amount of support per location received in the state for that ETC over the support term for the relevant number of locations, plus 5% of the support recipient's total Rural Digital Opportunity Fund support authorized over the ten-year support term for that state; and (4) if an ETC has deployed to less than 85% of its new location count, USAC will recover an amount of support that is equal to 1.75 times the average amount of support per location received in the state for that ETC over the support term for the relevant number of locations, plus 10% of the support recipient's total Rural Digital Opportunity Fund support authorized over the ten-year support term for that state.

60. The same support reductions will apply if USAC later determines in the course of a compliance review that a support recipient does not have sufficient evidence to demonstrate that it was offering service to all of the locations required by the sixth or eighth service milestones.

61. As in the CAF Phase II auction, USAC will be authorized to draw on an ETC's letter of credit to recover all of the support that is covered by the letter of credit in the event that a support recipient does not meet the relevant service milestones, does not come into compliance during the cure period, and does not timely repay the Commission the support associated with the non-compliance gap. If a support recipient is in Tier 4 status during the build-out period or has not deployed to 100% of CAM locations by the end of year six (or the adjusted location total if there are fewer locations), and USAC has initiated support recovery as described in this document, the support recipient will have six months to pay back the support that USAC seeks to recover. If the support recipient does not repay USAC by the deadline, the Bureau will issue a letter to that effect and USAC will draw on the letter of credit to recover all of the support that is covered by the letter of credit. If a support recipient has closed its letter of credit and it is later determined that the support recipient does not have sufficient evidence to demonstrate that it was offering service to the total number of required locations, that support recipient will be subject to additional non-compliance measures if it does not repay the Commission after six months. And like other high-cost ETCs, support recipients will be subject to other sanctions for non-compliance with the terms and conditions of high-cost funding, including but not limited to the Commission's existing enforcement procedures and penalties, reductions in support amounts, potential revocation of ETC designations, and suspension or debarment.

62. The Commission sought comment on whether there are additional measures it could adopt that would help ensure that Rural Digital Opportunity Fund support recipients will meet their third-year service milestones, and on what steps it should take if it appears support recipients will not be able to meet their service milestones. The National Rural Electric Cooperative Association (NRECA) suggested the Commission make more detailed inquiries of a support recipient to the extent it substantially misses the 40% service obligation at the three-year benchmark and possibly terminate support payments. The Commission agrees with NRECA that it is unlikely that a recipient that substantially misses its third-year milestone would be able to come into compliance in the following year. The Commission therefore directs

any support recipient that believes it cannot meet its year three milestone to notify the Bureau and provide information explaining this expected deficiency. If a support recipient has not made such notification by March 1 following the third-year service milestone and has deployed by the end of the third-year milestone to fewer than 20% of its required locations in that state, the Commission will find the recipient to be in default, rather than withholding support and providing an additional six months to come into compliance.

63. The Commission declines to adopt additional performance targets to provide greater incentives for Rural Digital Opportunity Fund support recipients to enroll customers in the eligible areas. The Commission specifically sought comment on a proposal to adopt subscribership milestones set at 70% of the yearly deployment benchmarks and reduce support accordingly for failure to meet the subscription target. Most commenters opposed a subscription requirement and argued that a 70% subscription requirement was too high and unrealistic in rural areas. Even some commenters supporting the concept of a subscription requirement thought 70% was too high and suggested any subscribership requirement should be as low as 35%. Commenters argued that a subscribership requirement with reductions in support for failure to meet those targets would discourage participation in the auction, and change the focus of the Rural Digital Opportunity Fund program from a deployment program to an adoption program.

64. The Commission agrees that requiring specific subscription milestones is likely to discourage many bidders from participating in the auction because they would risk losing funding when they likely need it most to complete the buildout of their networks. Commenters pointed out that support recipients have a statutory obligation to advertise the availability of their services throughout their service areas and argue that they have the incentive to attract customers to increase their revenues. Commenters also argued that subscription rates of 70% in some rural, low-income areas would be almost impossible to attain. In addition, support recipients must be prepared to provide service meeting the relevant public interest obligations within 10 business days to any locations they report in the HUBB for purposes of meeting the service milestones, which will give support recipients added incentive to ensure their networks have sufficient capacity to serve the required number of locations. Given these requirements, the risk of discouraging participation in the auction, and the administrative complexity of monitoring subscribership, the Commission declines to require a certain level of subscription as a condition of Rural Digital Opportunity Fund support.

65. Consistent with prior Commission auctions and based on its recent experience with the CAF Phase II auction, the Commission adopts the two-stage application process that will govern the auction process for the Rural Digital Opportunity Fund, including pre-auction and post-auction requirements.

66. The Commission concludes that participants in the Rural Digital Opportunity Fund Phase I auction process will be required to comply with the same short-form and long-form application process. Specifically, in the pre-auction short-form application, a potential bidder will be required to establish its eligibility to participate in the auction by providing, among other things, basic ownership information and certifying to its qualifications to receive support. Once approved as qualified to bid by the Bureau, the company may participate in the auction. After the auction, winning bidders must file more extensive information for the long-form application, demonstrating to the Commission that they are legally, technically and financially qualified to receive support. As in CAF Phase II, the Commission stresses that each potential bidder has the sole responsibility to perform its due diligence research and analysis before proceeding to participate in the Rural Digital Opportunity Fund auction. The Commission directs the Bureau, the Office of Economics and Analytics, and the Rural Broadband Auctions Task Force, to adopt the format and deadlines for the submission of documentation for the short-form and long-form applications.

67. Consistent with the approach in the CAF Phase II auction and proposed in the *Rural Digital Opportunity Fund NPRM,* the Commission adopts its existing universal service competitive bidding rules so that applicants will be required to provide information that will establish their identity, including disclosing parties with ownership interests and any agreements the applicants may have relating to the support to be sought through the Rural Digital Opportunity Fund auction. Interested parties will submit a pre-auction short-form application, providing basic information and certifications regarding their eligibility to receive support. Commission staff will then review the short-form applications, determining whether the applicants are eligible to participate in the auction. Thereafter, Commission staff will release a public notice indicating which short-form applications are deemed complete and which are deemed incomplete. Consistent with CAF Phase II, applicants whose short-form applications are deemed incomplete will be given a limited opportunity to cure defects and to resubmit correct applications, excluding major modifications. As in CAF Phase II, a second public notice will be released designating the applicants that are qualified to participate in the Rural Digital Opportunity Fund auction.

68. *Ownership.* The Commission will require that each auction applicant provide information in its short-form application to establish its identity, including information concerning its real parties in interest and its ownership, and to identify all real parties in interest to any agreements relating to the participation of the applicant in the competitive bidding. The Commission will also require an applicant to provide in its short-form application a brief description of any such agreements, including any joint bidding arrangements. Commission staff would use such information to identify relationships among applicants, including those that might be commonly controlled or members of a joint bidding arrangement. The Commission will also require every applicant to certify in its short-form application that it has not entered into any explicit or implicit agreements, arrangements, or understandings of any kind related to the support to be sought through the Rural Digital Opportunity Fund auction, other than those disclosed in the short-form application.

69. *Types of Technologies.* The Commission will also require all applicants to indicate the type of bids that they plan to make and describe the technology or technologies they will use to provide service for each bid. This information is imperative to establishing bidders' eligibility for the bidding weights the Commission adopts. Consistent with CAF Phase II, the Commission will allow an applicant to use different technologies within a state as well as hybrid networks to meet its public interest obligations.

70. *Technical and Financial Qualifications Certifications.* Likewise, applicants will be required to certify that they are financially and technically qualified to meet the public interest obligations in each area for which they

seek Rural Digital Opportunity Fund support. Based on the Commission's experience with CAF Phase II, this approach is an appropriate screening process to ensure serious participation, without being overly burdensome to applicants and recipients.

71. *Operational History.* Applicants will be required to provide additional assurances to the Commission that the entities that intend to bid in the auction have experience operating networks. The Commission adopts a requirement that applicants certify in their short-form application that they have provided voice, broadband, and/or electric distribution or transmission services for at least two years and that they specify the number of years they have been operating, or that they are the wholly-owned subsidiary of an entity that meets these requirements. Applicants that have provided voice or broadband services must also certify that they have filed FCC Form 477s as required during that time period. As the Commission determined in CAF Phase II, it also will accept certifications from entities that have provided electric distribution or transmission services for at least two years (or their wholly owned subsidiaries).

72. An applicant that can certify it has provided voice, broadband, and/or electric distribution or transmission services for at least two years, or that it is a wholly-owned subsidiary of such an entity, will provide the Commission with sufficient assurance before the auction that it has the ability to build and maintain a network.

73. The Commission will require each applicant that does not have two years of operational experience, to submit with its short-form application its (or its parent company's) financial statements that have been audited by an independent certified public accountant from the three prior fiscal years, including the balance sheets, incomes, and cash flow statements, along with a qualified opinion letter. The Commission's interest in having a level of insight into the financial health of a potential Rural Digital Opportunity Fund auction bidder over a longer period of time is a necessary prequalification to bid, particularly because this subset of bidders will not able to demonstrate that they have operated and maintained a voice, broadband and/or electric distribution or transmission network for at least two years. Likewise, such applicants will also be required to submit a letter of interest from a bank meeting the Commission's eligibility requirements stating that the bank would provide a letter of credit to the applicant if the applicant becomes a winning bidder and is awarded support of a certain dollar magnitude. A letter of interest from the bank will provide the Commission with an independent basis for some additional assurance regarding the financial status of the entity.

74. The Commission declines to adopt a suggestions from USTelecom and Windstream to limit the total bid based on the bidder's annual revenues, while Verizon proposes further pre-auction scrutiny ''on applicants that are seeking authority to bid for a large number of locations, relative to the size of their existing customer base, or are planning to bid for performance tiers in which they currently provide little or no commercial service.'' The Commission is not persuaded that either of these proposals are an effective method to guarantee the financial qualifications of bidders to perform; instead, they would more likely limit competition by arbitrarily excluding bidders with more limited revenues or existing customer bases. The Commission is generally reluctant to adopt additional measures that limit competition from bidders and any concerns with financial qualifications will be resolved during the short-form applications.

75. The Commission declines to collect less financial and technical information from existing USF support recipients on the short-form than it did in CAF Phase II as suggested by some commenters. It is important for Commission staff to review the same specific information from each carrier when evaluating carriers' qualifications to bid. However, CAF Phase II auction participants that subsequently defaulted on their entire award will be barred from participating in the Rural Digital Opportunity Fund. The Commission declines to bar participants that defaulted in other universal service programs as well as decline to subject participants to additional scrutiny that subsequently defaulted in CAF Phase II, as suggested by other commenters, or that have filed for bankruptcy or that have been bankrupt in the recent past. The Commission is capable of evaluating the circumstances of a prior default and the outcome of any subsequent enforcement action without collecting additional information in the short-form application. All applicants will be subject to a thorough financial and technical review in both the short-form application stage and the long-form application stage prior to bidding and ultimately receiving support.

76. Conversely, some commenters stated that the Commission should increase the short-form requirements. For instance, NTCA asserted that the Commission should require that a prospective bidder demonstrate ''more thorough qualifications at the short-form stage'' focusing on technical and operational qualifications. NRECA proposes shifting to the short-form review more of the detailed technical and financial showings conducted at the long-form review. USTelecom states that the Commission should require an applicant to provide information about subscribership trends and employee expertise to show that it has the expertise and experience ''to scale its network.'' Subscribership and employee expertise do not necessarily suggest that the entity is unqualified to bid in the Rural Digital Opportunity Fund auction. The Commission's interest in maximizing participation in the Rural Digital Opportunity Fund auction outweighs the potential risk of qualifying a less experienced entity to participate in the auction without reviewing that bidder's subscribership and employee counts, particularly given that it adopts the requirement that bidders will be required to submit their audited financial statements. This will allow the Commission to scrutinize the bidder's audited financial statements at the long-form application stage before authorizing that entity to begin receiving support. The Commission believes that requiring more technical and operational information before the auction begins will provide significant barriers to entry for some participants and unnecessarily extend the short-form review period and delay the auction. Moreover, additional technical information at the short-form stage would be speculative based on a presumption of what a winning area would look like.

77. Similarly, the Commission declines NTCA's proposal to require applicants to submit propagation maps to show where they intend to bid, as it would be burdensome on applicants ''particularly given the maps may not be relevant if an applicant does not become qualified or does become qualified but does not win support in that area.'' The Commission concludes on balance that its short-form process provides significant assurances for serious participation and its long-form post-auction process, as discussed in the following, will provide an in-depth extensive review of the winning bidders' qualifications.

78. *Audited Financials.* The Commission will require each applicant that has certified that it has at least two years of operational experience to submit financial statements that have been audited by an independent certified public accountant from the

prior fiscal year, including balance sheets, net income and cash flow, along with a qualified opinion letter with its short-form application. If such an applicant (or its parent company) is not audited in the ordinary course of business, the Commission will require the applicant to submit unaudited financial statements from the prior fiscal year with its short-form application and to certify that it will submit audited financials during the long-form application process. The Commission will require winning bidders that take advantage of this option to submit their audited financials no later than the deadline for submitting their proof of ETC designation (which is within 180 days of the public notice announcing winning bidders). If the audit process is expected to exceed 180 days, a winning bidder will have the option of seeking a waiver of this deadline. In considering such waiver requests, the Commission directs the Bureau to determine whether the entity demonstrated in its waiver petition that it took steps to prepare for an audit prior to being named a winning bidder and that it took immediate steps to obtain an audit after being announced as a winning bidder. Applicants that certify that they have at least two years of operational experience and fail to submit audited financial statements as required, will be subject to the same base forfeiture of $50,000 that the Commission adopted for the CAF Phase II auction. The Commission notes that most CAF Phase II auction support recipients were able to obtain audited financial statements by the required deadlines. As with the CAF Phase II auction, the Commission does not extend to applicants that lack two years of operational history the option of submitting audited financial statements during the long-form application stage. They must submit audited financial statements from the three prior fiscal years with their short-form application, as described in this document.

79. *Eligible Telecommunications Carrier Designation.* The Commission adopts the same CAF Phase II flexibility with respect to ETC designations and do not require an applicant to obtain its designation as an ETC in the areas where it seeks support prior to bidding in the Rural Digital Opportunity Fund auction. The Commission does, however, require an applicant to disclose in its short-form application its status as an ETC in any area for which it will seek support or if it will become an ETC in any area where it wins support. The Commission is not persuaded that it should require an applicant to secure its ETC designation prior to the auction. As the Commission determined in CAF Phase II, permitting entities to obtain ETC designation *after* the announcement of winning bidders for support, encourages broader participation in the competitive process by a wider range of entities. Additionally, the Commission's experience with CAF Phase II indicates that most applicants were ultimately designated within the long form review period, even if it took them longer than the ETC designation proof deadline. The Commission will continue to presume that an entity acted in good faith if it files its ETC application within 30 days of the release of the public notice announcing that it is a winning bidder, but as with both the rural broadband experiments and the CAF Phase II auction, the Commission discovered there were various circumstances impacting the ability of individual bidders to file their ETC applications and that when an application was filed did not always determine whether an applicant was designated within the 150 remaining days.

80. *Spectrum Access.* Additionally, with respect to eligibility requirements relating to spectrum access, applicants will be required to disclose and certify the source of the spectrum they plan to use to meet Rural Digital Opportunity Fund obligations in the particular area(s) for which they plan to bid. Specifically, applicants will be required to disclose whether they currently hold a license or lease the spectrum, including any necessary renewal expectancy, and whether such spectrum access is contingent on obtaining support in the auction. Consistent with CAF Phase II, the Commission will require applicants intending to use spectrum to indicate the spectrum band(s) they will use for the last mile, backhaul, and any other parts of the network; and the total amount of uplink and downlink bandwidth (in megahertz) that they have access to in each spectrum band for last mile. Applicants must also describe the authorizations they have obtained to operate in the spectrum and list the call signs and/or application file numbers associated with their spectrum authorizations, if applicable. Applicants must have secured any Commission approvals necessary for the required spectrum access prior to submitting an auction application, if applicable. Moreover, applicants will be required to certify that they will retain their access to the spectrum for at least ten years from the date support is authorized. NTCA argues that applicants who do not have access to spectrum should be required to show how they would acquire it. The Commission agrees and, consistent with its treatment of this situation in CAF Phase II, it will find a recipient in default if it is unable to meet its obligations, including if the authorization is not renewed during the support term.''

81. Also, any applicant that intends to provide service using satellite technology will be required to identify in its short-form application its expected timing for applying for any earth station licenses it intends to use in the areas where it intends to bid, if it has not already obtained these licenses. The Commission does not require satellite providers to obtain all necessary earth station licenses by the short-form application deadline. An earth station license requires that a satellite provider bring the station into operation within one year of obtaining a license and a satellite provider may not be ready to meet this requirement by the short-form filing deadline. Moreover, because an applicant can apply to obtain a microwave license at any time, the Commission will permit an applicant that intends to obtain microwave license(s) for backhaul to meet its public interest obligations for the Rural Digital Opportunity Fund by describing in its short-form application its expected timing for applying for such license(s), if it has not already obtained them.

82. *Due Diligence Certification.* Consistent with the procedures adopted for the CAF Phase II auction, the Commission adopts the requirement that an applicant certify that it has performed due diligence concerning its potential participation in the Rural Digital Opportunity Fund auction so the applicant understands its obligations. Specifically, the Commission adopts the requirement that each applicant make the following certification in its short-form application under penalty of perjury:

> The applicant acknowledges that it has sole responsibility for investigating and evaluating all technical and marketplace factors that may have a bearing on the level of Rural Digital Opportunity Fund support it submits as a bid, and that if the applicant wins support, it will be able to build and operate facilities in accordance with the Rural Digital Opportunity Fund obligations and the Commission's rules generally.

83. This proposed certification will help ensure that each applicant acknowledges and accepts responsibility for its bids and any forfeitures imposed in the event of default, and that the applicant will not attempt to place responsibility for the

consequences of its bidding activity on either the Commission or third parties.

84. Winning bidders for the Rural Digital Opportunity Fund support will be required to comply with the same long-form application process the Commission adopted for CAF Phase II. The rules the Commission adopts in the following provide the basic framework and requirements for winning bidders to demonstrate their qualifications for support. After the close of the auction, the Bureau will release a public notice declaring the auction closed, identifying the winning bidders, and establishing details and deadlines for next steps. Winning bidders will then be required to submit extensive information detailing their respective qualifications in their long-form applications, allowing for a further in-depth review of their qualifications prior to authorization of support. Any additional information that is required to establish whether an applicant is eligible for Rural Digital Opportunity Fund support will be announced by public notice. The Commission notes that very few commenters addressed the Commission's proposed post-auction long-form application processes and none of those commenters raised significant concerns. The Commission therefore concludes the rules it adopts in this document will best serve the Commission's ability to determine whether the applicants are ultimately eligible for Rural Digital Opportunity Support authorization funding, providing a fair and efficient review process.

85. *Ownership Disclosure.* The Commission adopts the ownership disclosure requirements proposed in the *Rural Digital Opportunity Fund NPRM.* Specifically, an applicant for Rural Digital Opportunity Fund support must fully disclose its ownership structure as well as information regarding the real party- or parties-in-interest of the applicant or application. Ownership disclosure reports from the short-form process must be updated if any information reported in the short-form has changed.

86. *Financial and Technical Capability Certification.* Consistent with CAF Phase II, the Commission will require a long-form applicant to certify that it is financially and technically capable of providing the required coverage and performance levels within the specified timeframe in the geographic areas in which it won support.

87. *Public Interest Obligations Certifications.* The Commission next adopts proposed rule 54.804(b)(2)(iii), concluding that a long-form applicant must certify in its long-form application that it will meet the relevant public interest obligations for each performance tier and latency combination for which it was deemed a winning bidder, including the requirement that it will offer service at rates that are equal to or lower than the Commission's reasonable comparability benchmarks for fixed services offered in urban areas.

88. *Description of Technology and System Design.* Due to the varying types of technologies that entities may use to fulfill their Rural Digital Opportunity Fund competitive bidding process obligations, the Commission finds that it is also reasonable to require each winning bidder to submit a description of the technology and system design it intends to use to deliver voice and broadband service, including a network diagram, which must be certified by a professional engineer. The professional engineer must certify that the network is capable of delivering, to at least 95% percent of CAM locations in each relevant state, voice and broadband service that meets the requisite performance requirements. There must be sufficient capacity to meet customer demand at or above the prescribed levels during peak usage periods. Entities proposing to use wireless technologies also must provide a description of their spectrum access in the areas for which they seek support and demonstrate that they have the required licenses to use that spectrum if applicable. This documentation will enable Commission staff to have assurance from an engineer that the proposed network will be able to fulfill the service obligations to which the bidders will have to commit. Filing deadlines will be strictly enforced, and bidders should not presume that they may obtain a waiver absent extraordinary circumstances.

89. *Available Funds Certification.* Next the Commission adopts proposed rule 54.804(b)(2)(v), concluding that an applicant must certify in its long-form application that it will have the funds available for all project costs that exceed the amount of support to be received, and that it will comply with all program requirements. Simultaneously, the Commission will also require that winning bidders describe in their long-form application how the required construction will be funded and include financial projections that demonstrate that they can cover the necessary debt service payments over the life of the loan. Additionally, these requirements include the public interest obligations contained in the Commission's rules.

90. *ETC Eligibility and Documentation.* Consistent with the CAF Phase II auction rules, a winning bidder in the Rural Digital Opportunity Fund auction will be permitted to obtain its ETC designation after the close of the auction, submitting proof within 180 days of the public notice identifying winning bidders. The Commission declines to forbear from the ETC requirement. The Commission recognizes the statutory role that Congress created for state commissions and the FCC with respect to ETC designations, and the Commission does not disturb that framework. Nothing in the record addresses the standards necessary to find forbearance in the public interest, even if some interested parties may prefer not to become ETCs with all of the associated obligations. Therefore, the Commission will continue to require service providers to obtain ETC status to qualify for universal service support. A winning bidder must demonstrate with appropriate documentation that it has been designated as an ETC covering each of the geographic areas for which it seeks to be authorized for support. For example, in addition to providing the relevant state or Commission orders, each winning bidder will need to demonstrate that its ETC designation covers the areas of its winning bid(s) (*e.g.,* census blocks, wire centers, etc.). Such documentation could include map overlays of the winning bid areas, or charts listing designated areas. Furthermore, each winning bidder will be required to submit a letter with its documentation from an officer of the company certifying that its ETC designation for each state covers the relevant areas where the winning bidders will receive support. As the Commission experienced with CAF Phase II, these requirements will help them verify that each winning bidder is permitted to operate in the areas where it will be receiving support.

91. *Forbearance from Service Area Redefinition Process.* The Commission adopts its proposal to forbear from the statutory requirement that the ETC service area of a Rural Digital Opportunity Fund participant conform to the service area of the rural telephone company serving the same area. As in the CAF Phase II auction, the Commission will be maximizing the use of Rural Digital Opportunity Fund support by making it available for only one provider per geographic area. Moreover, the Commission expects that the incumbent rural telephone company's service area will no longer be relevant because the incumbent service

provider may be replaced by another Rural Digital Opportunity Fund recipient in portions of its service area. Thus, forbearance is appropriate and in the public interest.

92. Accordingly, for those entities that obtain ETC designations as a result of being selected as winning bidders for the Rural Digital Opportunity Fund, the Commission forbears from applying section 214(e)(5) of the Act, insofar as this section requires that the service area of such an ETC conform to the service area of any rural telephone company serving an area eligible for Rural Digital Opportunity Fund support. The Commission notes that forbearing from the service area conformance requirement eliminates the need for redefinition of any rural telephone company service areas in the context of the Rural Digital Opportunity Fund competitive bidding process. However, if an existing ETC seeks support through the Rural Digital Opportunity Fund competitive bidding process for areas within its existing service area, this forbearance will not have any impact on the ETC's pre-existing obligations with respect to other support mechanisms and the existing service area. Likewise, as in CAF Phase II, some of the price cap carrier study areas that may become eligible for the Rural Digital Opportunity Fund competitive bidding process meet the statutory definition so that the carrier serving those study areas would be classified as a rural telephone company.

93. Thus, the Commission concludes that forbearance is warranted in these limited circumstances. The Commission's objective is to distribute support to winning bidders as soon as possible so that they can begin the process of deploying new broadband to consumers in those areas. Case-by-case forbearance would likely delay the Commission's post-selection review of entities once they are announced as winning bidders. The Act requires the Commission to forbear from applying any requirement of the Act or its regulations to a telecommunications carrier if the Commission determines that: (1) Enforcement of the requirement is not necessary to ensure that the charges, practices, classifications, or regulations by, for, or in connection with that telecommunications carrier or telecommunications service are just and reasonable and are not unjustly or unreasonably discriminatory; (2) enforcement of that requirement is not necessary for the protection of consumers; and (3) forbearance from applying that requirement is consistent with the public interest. For the same reasons set forth in the *CAF Phase II Auction Order,* 81 FR 44414, July 7, 2016, the Commission concludes each of these statutory criteria is met for winning bidders of the Rural Digital Opportunity Fund competitive bidding process.

94. *Letters of Credit.* The Commission next adopts letter of credit rules that provide appropriate protection for Rural Digital Opportunity Fund support, with reduced burdens on participants. In CAF Phase II, the Commission found that requiring bidders to obtain an irrevocable standby letter of credit, covering the first year of support of a recipient's winning bid, was an effective means to safeguard the universal service funds. Moreover, the letter of credit was subject to a phase-down schedule, reducing the burdens on the recipients. The letter of credit requirement did not deter broad participation in the CAF Phase II auction where the Commission awarded $1.488 billion in support to 103 winning bidders and, as of December 2019, nearly 90 percent of carriers have been authorized after securing valid letters of credit. Thus, the Commission is not persuaded to adopt suggestions from commenters that it removes the letter of credit requirement entirely, either for all winning bidders or for certain groups of winning bidders such as Tribally owned and controlled carriers or established rural carriers.

95. The Commission finds appropriate, however, certain modifications to the letter of credit requirements proposed in the *Rural Digital Opportunity Fund NPRM.* The Commission makes these changes after hearing from commenters concerned about the fees associated with maintaining the larger letters of credit required because of the size of the Rural Digital Opportunity Fund. The Commission concludes that the modified letter of credit requirements it adopts in the following, which establishes a mechanism to easily recover disbursed funding in the event of non-compliance, fulfills its responsibility to protect program funds while also reducing for applicants the costs of participating in the Rural Digital Opportunity Fund.

96. *First,* the Commission's revised approach allows a support recipient to reduce the amount of its letter of credit as it meets—and USAC verifies that a support recipient has completed—service milestones. Specifically, the Commission requires support recipients to report their deployed locations in the HUBB by March 1 following each support year. Upon verification of the buildout by USAC, the Commission will then allow the recipient to reduce its letter of credit to an amount equal to only one year of total support. And once a support recipient reduces its letter of credit obligation to one year of total support, it will be able to maintain its letter of credit at that level for the remainder of the deployment term, as long as USAC verifies that the support recipient successfully and timely meets its remaining service milestones.

97. *Second,* the Commission creates an optional 20% service milestone in year two. Doing so allows a support recipient to demonstrate concrete progress in building its network earlier than existing milestones (40% in year three), thus allowing it to reduce its letter of credit earlier than it could otherwise. The Commission reiterates that this 20% buildout benchmark is optional; if a support recipient does not meet this milestone, it will not be able to reduce its letter of credit, but it will not face any reductions in support.

98. *Third,* the Commission finds that support recipients do not need to wait for the specific support years to end to meet their deployment milestones. For example, if a support recipient is able to deploy to 20% of its locations by the end of year one, it may report those locations and request that USAC complete the verification process for those locations in order to allow it to reduce its letter of credit to one year of support. In those instances, the Commission requires that these support recipients be able to immediately produce the necessary documentation to minimize the time required for USAC to verify its milestone.

99. *Fourth,* the Commission adopts a modified letter of credit requirement for the time periods before any required service milestones must be met and verified by USAC. Specifically, at the beginning of the first year of its support term, a support recipient must obtain a letter of credit equal to one year of the total support it will receive. In year two, it will be required to obtain a letter of credit equal to eighteen months of its total support. In year three, it will be required to obtain a letter of credit equal to two years of its total support. And in year four, it will be required to obtain a letter of credit equal to three years of its total support. This schedule balances the need to protect federal funds against the costs of a letter of credit for those that decline to meet the optional 20% deployment milestone.

100. *Fifth,* the Commission finds it necessary to maintain larger letters of credit for support recipients that fail to meet service milestones. If the support recipient misses a required service milestone, it will be required to obtain a letter of credit covering an additional year of total support for the next

applicable support year, up to a letter of credit covering a total of three years of support. Likewise, any support recipient failing to meet two or more service milestones will be required to maintain a letter of credit in the amount of three years of support and will be subject to additional non-compliance penalties as outlined in this document. The Commission finds these increased letter of credit requirements will both protect federal funds from potential default and serve as an incentive to timely deployment.

101. *Sixth,* consistent with CAF Phase II, the Commission will require that the letter of credit only remain open until the recipient has certified that it has deployed broadband and voice service meeting the Commission's requirements to 100% of the CAM locations by the end of year six, and USAC has verified that the recipient has fully deployed its network. The Commission does not expect new additional locations in years seven and eight to be significant enough that it would be necessary to secure that additional deployment with a letter of credit, but recipients will be subject to other sanctions for non-compliance with the terms and conditions of Rural Digital Opportunity Fund support, including but not limited to the Commission's existing enforcement procedures and penalties, reductions in support amounts, potential revocation of ETC designations, and suspension or debarment.

102. In short, the Commission provides a letter of credit trajectory that recognizes that once support recipients have demonstrated significant and verifiable steps toward meeting their deployment obligations, they should have the opportunity to avoid some of the more significant credit requirements, consistent with their proven performance in the Rural Digital Opportunity Fund. For those support recipients that elect to deploy quickly and meet the 20% optional milestone early in the support term, and continue to meet all milestones, their letters of credit may never exceed 18 months' support at any time during the support term. At the same time, the more gradual increase in the letter of credit requirements the Commission adopts for support recipients that do not elect to make use of the optional 20% milestone will reduce potential financial strain on support recipients, and still allow those support recipients to maintain a smaller letter of credit once their first mandatory deployment milestone is met in year three.

103. The Commission declines to adopt the specific parameters of the letter of credit proposals advanced and supported by several parties. After thorough review of these constructive proposals, the Commission determines that they fail to sufficiently account for the Commission's interests in ensuring that universal service dollars are being used efficiently and for their intended purposes, as well as protecting against the potential for those carriers that may fail to fulfill their broadband deployment obligations. However, the approach the Commission adopts here is consistent with the proposals advocated by parties in that it recognizes that the letter of credit rules, as originally proposed, would impose a disproportionate financial burden on support recipients and result in less funding going directly to broadband deployment. Moreover, given that the Rural Digital Opportunity Fund will award up to almost 15 times the amount of funding as the CAF Phase II auction, the Commission acknowledges that a one-size-fits-all approach to letter of credit requirements may not properly reflect the realities of a particular auction. Thus, the Commission's revised approach strives to carefully balance the interest of potential support recipients in minimizing their financial cost over the course of the deployment term with the Commission's interest in ensuring that universal funding is protected as the Rural Digital Opportunity Fund progresses.

104. Consistent with CAF Phase II, the Commission will only authorize USAC to draw on the letter of credit for the entire amount of the letter of credit if the entity does not repay them for the support associated with its compliance gap. Additionally, as stated in CAF Phase II, ''if the entity fails to pay this support amount, the Commission concludes that the risk that the entity will be unable to continue to serve its customers or may go into bankruptcy is more likely, and thus it is necessary to ensure that the Commission can recover the entire amount of support that it has disbursed.'' The Commission also requires each winning bidder to submit a commitment letter from a bank no later than the number of days provided by public notice. A long-form applicant must submit a letter from a bank acceptable to the Commission, committing to issue an irrevocable stand-by letter of credit, to the long-form applicant. The letter must, at a minimum, provide the dollar amount of the letter of credit and the issuing bank's agreement to follow the terms and conditions of the Commission's model letter of credit provided in Appendix C of the Order.

105. Once a winning bidder has been authorized, the Commission will require an irrevocable standby letter of credit from a bank that is acceptable to them in substantially the same form as the model letter of credit provided in Appendix C of the Order. The letters of credit for winning bidders must be obtained from a domestic or foreign bank meeting the requirements adopted herein. For U.S. banks, the bank must be insured by the Federal Deposit Insurance Corporation and have a Weiss bank safety rating of B- or higher committing to issue a letter of credit. Similarly, for non-U.S. banks, the Commission requires that the bank be among the 100 largest non-U.S. banks in the world (determined on the basis of total assets as of the end of the calendar year immediately preceding the issuance of the letter of credit, determined on a U.S. dollar equivalent basis as of such date). Winning bidders also have the option of obtaining a letter of credit from CoBank or the National Rural Utilities Cooperative Finance Corporation so long as they continue to meet the Commission's requirements. When a winning applicant obtains a letter of credit, it must be at least equal to the amount of the first year of authorized support. Before the winning applicant can receive its next year's support, it must modify, renew, or obtain a new letter of credit. The Commission concludes that requiring recipients to obtain a letter of credit on at least an annual basis will help minimize administrative costs for USAC and the recipient rather than having to negotiate a new letter of credit for each monthly disbursement.

106. However, the Commission will require all winning bidders to provide a single letter of credit covering all of their winning bids within a single state. The Commission declines to allow multiple letters of credit that cover all bids in a state as it did for CAF Phase II, as this option was not used and is administratively burdensome on the Commission and USAC. Thus, a default in one census block could result in a draw on the entire letter of credit.

107. As the Commission has previously recognized, it will again allow for the option of greater flexibility regarding letter of credit for Tribally owned and controlled winning bidders. Consistent with CAF Phase II, if any Tribally owned and controlled Rural Digital Opportunity Fund winning bidder is unable to obtain a letter of credit, it may file a petition for a waiver of the letter of credit requirement. Consistent with the Commission's precedent, waiver applicants must show, with evidence acceptable to them, that the Tribally owned and controlled

winning bidder is unable to obtain a letter of credit.

108. The determinations the Commission reaches in this document take into consideration the comments submitted on the burdens associated with the letter of credit requirement. The Commission concludes, however, that the letter of credit requirement best protects the Fund. While the Commission understands that there are costs associated with the letter of credit, it continues to believe bidders can incorporate these costs when determining their strategies prior to the auction. The universal service program provides significant benefits when weighed against the costs of the letter of credits, which in turn provide significant security of public funding. As the Commission has previously stated, letters of credit have ''the added advantage of minimizing the possibility that the support becomes property of a recipient's bankruptcy estate for an extended period of time, thereby preventing the funds from being used promptly to accomplish the Commission's goals.''

109. Commenters renewed requests for other safeguard measures, yet none of the measures fully guarantee that the Commission will be able to recover past support disbursements from a defaulting recipient. Several commenters suggested performance bonds or sureties. For example, WISPA and WTA assert the Commission should require auction winners to obtain performance bonds as an alternative to obtaining letters of credit, costing participants substantially less than a letter of credit. USTelecom agrees, commenting that the Commission should reconsider its proposals requiring Rural Digital Opportunity Fund winners to obtain a letter of credit as it is a substantial barrier to participation. Letters of credit, unlike performance bonds, allow for an immediate reclamation of support in the event the recipient is not properly using those funds. Performance bonds, on the other hand, would not provide the same level of protection and would require the involvement of a third party to adjudicate any disputes that arise, which would complicate the Commission processes and unnecessarily limit the authority of the Commission to allocate funds. A letter of credit, unlike a performance bond, has the benefit of the ''independence principle'' in that the letter of credit is independent of the underlying transaction. The bank's obligation to pay under the letter of credit does not depend on the auction winner's default but on the presentation of documents evidencing the default. Being independent in this way assures that USAC can collect monies due to it promptly without engaging in disputes with the winning bidder, the performance bond guarantor or the winning bidder's trustee in bankruptcy over whether the funds should be paid or even whether the funds are available to the Fund due to competing claims of creditors.

110. Similarly, Frontier and Windstream recommend placing money in escrow prior to bidding because they claim letters of credit are too expensive. The record also includes several comments opposing letter of credits or suggesting other means of protecting the Commission's interests. However, the Commission is not persuaded that escrow agreements, or other alternatives, would provide protection equal to the letters of credit that it now requires. Escrow agreements would put an amount of money with a third party who releases it when a contingency is satisfied. The auction winner would be a party to the escrow agreement, with the possibility that the support becomes the property of an auction winner's bankruptcy. Additionally, the auction winner would be required to place the same amount of funds in escrow as were disbursed by USAC, which could cause ''administrative burdens'' on the Commission and ''could potentially delay the auction.'' The Commission itself would need to create an escrow account, attain the money of all recipients, and manage and ensure proper payment to all recipients, an unnecessary and inefficient duplication of a system banks already have in place with letters of credit, with none of the advantages. Instead, the Commission can rely on the expertise of banks' experience in managing letters of credit, guaranteeing payment, and ensuring security for the Commission and ultimately the Fund. Therefore, the Commission declines to implement escrow accounts and maintain the letter of credit requirement.

111. Finally, consistent with CAF Phase II, the Commission will require each winning bidder to submit a bankruptcy opinion letter from outside legal counsel. That opinion letter must clearly state, subject only to customary assumptions, limitations, and qualifications, that in a proceeding under the Bankruptcy Code, the bankruptcy court would not treat the letter of credit or proceeds of the letter of credit as property of the account party's bankruptcy estate, or the bankruptcy estate of any other competitive bidding process recipient-related entity requesting issuance of the letter of credit under section 541 of the Bankruptcy Code. The West Virginia Council argues that the bankruptcy opinion letter requirement is unduly burdensome and should be eliminated ''to accommodate non-traditional service providers like co-ops, non-profits, and government entities . . . .'' However, it is important to receive confirmation from each winning bidder that its letter of credit would not be consolidated in the estate. Therefore, the Commission declines to eliminate this requirement and concludes that the limited burden imposed on winning bidders to obtain this letter is outweighed by its policy goal to be fiscally responsible with finite universal service funds.

112. The Commission next adopts rules that establish the framework under which a Rural Digital Opportunity Fund winning bidder will be subject to a forfeiture under section 503 of the Act if it defaults on its winning bid(s) before it is authorized to begin receiving support. A recipient will be considered in default and will be subject to forfeiture if it fails to timely file a long-form application, fails to meet the document submission deadlines outlined in this document, is found ineligible or unqualified to receive support, or otherwise defaults on its bid or is disqualified for any reason prior to the authorization of support. Consistent with CAF Phase II, a winning bidder will be subject to the base forfeiture for each separate violation of the Commission's rules.

113. For Rural Digital Opportunity Fund competitive bidding purposes, the Commission defines a violation as any form of default with respect to each geographic unit subject to a bid. The Commission maintains that each violation should not be unduly punitive and expect the forfeiture to be proportionate to the overall scope of the winning bidder's bid. The Commission concludes that it is reasonable to subject all bidders to the same $3,000 base forfeiture per violation subject to adjustment based on the criteria set forth in its forfeiture guidelines. To determine the final forfeiture amount, the Commission's Enforcement Bureau will consider the ''nature, circumstances, extent and gravity of the violations.''

114. No commenter specifically opposed the Commission's original proposal to establish the forfeiture owed for an auction default. However, Windstream characterized the CAF Phase II forfeiture as ''modest'' and ''apparently insufficient to prevent [defaulters] from bidding.'' Windstream further noted that ''the forfeiture penalties proposed against [defaulters], which range from $1,242 to $30,000 did not deter these entities from bidding.'' USTelecom suggested that the Commission raise the base forfeitures, as the CAF Phase II base amounts were ''not substantial enough to dissuade'' uncommitted applicants from participating.

115. The Commission agrees with commenters. Thus, to ensure that the amount of the base forfeiture is not disproportionate to the amount of an entity's bid, the Commission also limits the total base forfeiture to 15% of the bidder's total bid amount for the support term, which is an increase from the CAF Phase II auction limit of 5%. The Commission expects this will further ensure serious participation, without being overly burdensome and punitive to defaulters. As a condition of participating in the Rural Digital Opportunity Fund auction, entities will acknowledge that they are subject to a forfeiture in the event of an auction default. Thus, the Commission maintains that by adopting rules governing forfeitures for defaults, ''the Commission will impress upon recipients the importance of being prepared to meet all its requirements for the post-selection review process, and emphasize the requirement that they conduct a due diligence review to ensure that they are qualified to participate in the . . . competitive bidding process and meet its terms and conditions.''

III. Rural Digital Opportunity Fund Transitions

116. In this section, the Commission addresses several issues relating to the implementation of the Rural Digital Opportunity Fund in areas currently served by price cap carriers receiving either legacy high-cost or CAF Phase II model-based support. To ensure continuity of service for consumers, the Commission adopts specific support transition paths for census blocks served by these price cap carriers. The Commission also considers additional issues related to the transition from CAF Phase II model-based support to Rural Digital Opportunity Fund support, including the continuing responsibilities of incumbent price cap carriers no longer receiving support to serve specific areas.

117. In the *Rural Digital Opportunity Fund NPRM,* the Commission sought comment on adopting a transition period methodology for incumbent price cap carriers receiving disaggregated legacy support similar to the approach employed following the CAF Phase II auction. Specifically, the Commission proposed that, in areas where an incumbent price cap carrier receives disaggregated legacy support and subsequently it or another provider becomes the authorized Rural Digital Opportunity Fund support recipient, the incumbent will cease receiving disaggregated legacy support on the first day of the month after it is authorized to receive Rural Digital Opportunity Fund support. In legacy high-cost support areas where no Rural Digital Opportunity Fund support is authorized, the Commission proposed allowing the incumbent to continue receiving disaggregated support until further Commission action. Finally, the Commission proposed ceasing disaggregated legacy support payments to incumbent carriers in any census block deemed ineligible for the Rural Digital Opportunity Fund on the first day of the month after the final Rural Digital Opportunity Fund eligible areas list is released.

118. Likewise, the Commission sought comment on transitioning support in areas served by CAF Phase II model-based support recipients. In particular, the Commission asked whether these carriers should receive an additional seventh year of model-based support, given the potential timing of a Rural Digital Opportunity Fund auction, and, if so, whether that additional support should be made available to all carriers receiving model-based support or only a certain subset of those carriers. The Commission also sought comment on whether the seventh year of support should be modified in any way, including whether it should cover all of 2021 or just a portion of the year, as well as whether any additional obligations should be tied to this support. Finally, the Commission asked parties to highlight any additional issues related to the transition of support.

119. Commenters broadly supported ensuring appropriate transitions to Rural Digital Opportunity Fund auction support and encouraged the Commission to affirm that all CAF Phase II model-based support recipients are entitled to a full seventh year of funding. In areas won by bidders in the Rural Digital Opportunity Fund auction, CenturyLink proposed that the Commission authorize all auction winners on January 1, 2022, with legacy transition support and CAF Phase II model-based support continuing through that time. Frontier argued that, in areas where the Rural Digital Opportunity Fund auction winner is not the incumbent price cap carrier, the Commission must provide continued support to existing CAF Phase II providers to ensure continued voice and broadband services, proposing a six-year phase out of this support at periods equal to the inverse of the new provider's deployment milestones. ITTA also argued for continued support for the incumbent price cap carriers in these areas, but instead proposed that the incumbent receive support at the level of the winning bidder in the respective service area until the winning bidder is able to serve all the locations currently served by the incumbent. In areas where there is no Rural Digital Opportunity Fund auction winner, Frontier and ITTA encouraged the Commission to provide existing price cap carriers with sufficient support to continue providing broadband and voice service. USTelecom, Windstream, and ITTA further advocated for continued support to incumbent price cap carriers in areas where auction winners are not authorized by the end of 2021. Additionally, CenturyLink and NTCA proposed extending ongoing support in areas deemed ineligible for the Rural Digital Opportunity Fund. Other commenters highlighted the need for transitional support and encouraged the Commission to tie specific metrics or obligations to this support.

120. For incumbent price cap carriers currently receiving support through the disaggregated legacy high-cost support mechanism, the Commission determines that adopting a transition to Rural Digital Opportunity Fund auction support that builds on the approach employed following the CAF Phase II auction will provide necessary clarity as it implements a new support mechanism. As the Commission noted when it adopted the transitions to CAF Phase II auction support, such an approach will ''protect customers of current support recipients from a potential loss of service, and minimize the disruption to recipients of frozen legacy support from a loss of funding'' while at the same time ensuring that finite universal service funds are used responsibly.

121. First, in areas currently funded by disaggregated legacy support that are subsequently won in the Rural Digital Opportunity Fund auction by the incumbent price cap carrier, the incumbent will cease receiving

disaggregated legacy support on the first day of the month following its authorization to receive Rural Digital Opportunity Fund support. Likewise, in legacy high-cost support areas won in the Rural Digital Opportunity Fund auction by new providers, the incumbent will cease receiving disaggregated legacy support the first day of the month after the new ETC is authorized to receive such support. In these instances, the Commission believes it is appropriate to transition to the new support mechanism as soon as possible to ensure that finite support dollars are used most efficiently.

122. The Commission recognizes that there may be eligible areas in the Rural Digital Opportunity Fund auction that see significant interest, but do not receive a winning bid. For these areas, the Commission revisits its prior approach of extending disaggregated legacy support on an interim basis until further Commission action. As the Commission previously noted, continued legacy support in auction-eligible, high-cost areas was provided on an interim basis pending further Commission action. Thus, carriers receiving legacy support have been on notice that this support would not be provided in perpetuity. The Commission now concludes that price cap carriers receiving legacy support in areas that do not receive a winning bid will cease receiving such support on the first day of the month following the close of Phase I of the auction. These support amounts will instead be included as part of the budget for Phase II of the auction. The Commission also declines to extend additional support to these carriers to maintain fixed voice services in these areas. As the Commission's most recent data indicate, mobile voice subscriptions constitute almost 75% of the overall consumer voice subscriptions in the United States. Given the increasing ubiquity of fixed and mobile voice services, dedicating continued support for fixed voice services would be an inefficient use of the Commission's finite universal service dollars. Instead, the Commission concludes that directing support toward deploying more robust broadband services, rather than continuing to maintain current minimum service levels, is the best use of this funding. The Commission notes, however, that these areas will be included in Phase II of the Rural Digital Opportunity Fund auction and thus price cap carriers currently serving these areas will have the opportunity to bid on and again receive support to provide voice and broadband services in these areas.

123. In all census blocks deemed ineligible for the Rural Digital Opportunity Fund auction, incumbent price cap carriers will no longer receive legacy support beginning the first day of the month following release of the final Rural Digital Opportunity Fund eligible areas list for Phase I of the auction. Because these areas will be excluded from Phase I of this auction, the Commission has determined that continued legacy support for these areas is no longer necessary. Thus, the Commission will cease distributing legacy support as soon as possible in order to preserve its finite universal service funds, instead focusing support to areas in the greatest need of broadband deployment.

TRANSITION OF PRICE CAP CARRIERS' LEGACY SUPPORT

Won at auction by the incumbent price cap carrier.	Receives legacy support until the first day of the month following its authorization, then transitions to Rural Digital Opportunity Fund support.
Won at auction by a new provider	Receives legacy support until the first day of the month following the new provider's authorization; new provider then receives Rural Digital Opportunity Fund support.
Not won at auction	Receives legacy support until the first day of the month following close of the auction.
Not eligible for auction	Receives legacy support until the first day of the month following release of the final eligible areas list.

124. Next, the Commission addresses support transitions in areas where incumbent price cap carriers currently receive CAF Phase II model-based support. As with the Commission's approach for legacy support transitions, it has attempted to strike a balance between properly allocating its finite resources and ensuring that consumers across the country have access to uninterrupted services. The Commission notes at the outset that it, in establishing the six-year term of support for model-based support recipients that would extend through 2020, intended to conduct a competitive bidding process in areas served by these carriers ''no later than the end of 2019 to ensure there is continuity and a transition path'' to the next support mechanism. Though the Commission did not meet this initial goal, it intends to conduct Phase I of the Rural Digital Opportunity Fund before the end of 2020. However, the Commission has learned from its experience with the CAF Phase II competitive bidding process that additional work will remain post-auction before winning bidders will be authorized to receive Rural Digital Opportunity Fund support and provide the required voice and broadband service. Because this work likely will stretch into 2021, the Commission revisits the previously established term of support for incumbent price cap carriers.

125. In the *December 2014 CAF Phase II Order,* 80 FR 4446, January 27, 2015, the Commission recognized the importance of providing a transition path between recipients of CAF Phase II model-based support and recipients of funding under a new support mechanism. Specifically, the Commission determined that it would offer incumbent price cap carriers the option of electing an additional year of support—through calendar year 2021—if they did not win at, or chose not to participate in, the subsequent competitive bidding process. Because of the timing considerations regarding Phase I of Rural Digital Opportunity Fund explained in this document, the Commission now determines that an additional seventh year for carriers receiving model-based support is necessary to ensure continuity in service for consumers and to provide a reasonable support glide path as it transitions from one support mechanism to another. This additional seventh year will not be limited to carriers that do not win in Phase I of the Rural Digital Opportunity Fund auction or carriers that do not participate in the auction; instead it will be available to all price cap carriers that elected the offer of model-based support in exchange for meeting defined service obligations. The Commission directs the Bureau to determine and implement a mechanism that will enable these price cap carriers to elect whether to receive an additional seventh year of support.

126. The Commission clarifies that in census blocks where a price cap carrier elects not to receive a seventh year of model-based support, it is indicating that ongoing model-based support is not necessary to maintain voice and broadband services in these areas. Thus,

the carrier will receive no further support after the conclusion of its six-year term (*i.e.,* December 31, 2020), even if these areas are eligible for the Rural Digital Opportunity Fund auction. Following Phase I of the auction, the provider authorized to receive funding in these areas—whether the incumbent price cap carrier or a new provider—will begin receiving Rural Digital Opportunity Fund support the first day of the month after it is authorized. For areas where no qualifying bid is received in Phase I of the Rural Digital Opportunity Fund auction, as well as for areas deemed ineligible for Phase I of the Rural Digital Opportunity Fund auction, the incumbent price cap carrier's model-based support will cease on December 31, 2020 and no further support will be provided in these areas.

TRANSITION FOR PRICE CAP CARRIERS IN AREAS WHERE A CARRIER DECLINES A SEVENTH YEAR OF MODEL-BASED SUPPORT

Won at auction by the incumbent price cap carrier.	Receives model-based support through 2020; begins receiving Rural Digital Opportunity Fund support the first day of the month after it is authorized.
Won at auction by a new provider	Receives model-based support through 2020; new provider begins receiving Rural Digital Opportunity Fund support the first day of the month after it is authorized.
Not won at auction	Receives model-based support through 2020.
Not eligible for auction	Receives model-based support through 2020.

127. In census blocks where a price cap carrier elects to receive a seventh year of model-based support, the Commission clarifies that the carrier will receive a full seventh calendar year of support—from January 2021 through December 2021—regardless of whether Rural Digital Opportunity Fund support is authorized in these areas in 2021. Thus, in areas where a price cap carrier currently receives model-based support that are subsequently won in the Rural Digital Opportunity Fund auction by a new provider, the incumbent price cap carrier will continue to receive model-based support through 2021, even if the new provider is authorized to receive Rural Digital Opportunity Fund support in 2021. The Commission concludes providing support to both the incumbent price cap carrier and the new Rural Digital Opportunity Fund provider in these areas for the limited duration of 2021 will help facilitate an appropriate transition to a new ETC. The Commission notes that price cap carriers receiving the seventh year of model-based support will ''be required to continue providing broadband with performance characteristics that remain reasonably comparable to the performance characteristics of terrestrial fixed broadband service in urban America, in exchange for ongoing CAF Phase II support.''

128. Similarly, in census blocks where a price cap carrier elects to receive a seventh year of model-based support and ultimately becomes the authorized Rural Digital Opportunity Fund support recipient, the price cap carrier will continue to receive support at its model-based levels through 2021, with Rural Digital Opportunity Fund support levels commencing in January 2022. The Commission declines to adopt USTelecom's proposal that incumbent price cap carriers be allowed to choose the greater of their model-based support or RDOF support amount to receive during the remainder of 2021. The Commission observes that the reserve price for the RDOF auction is based on the support amounts calculated by the model and likely will be bid down by participants in the auction. Thus, in most, if not all, cases a price cap carrier's model-based support amount will be greater than its Rural Digital Opportunity Fund support amount. Relatedly, in some instances, the incumbent price cap carrier may wish to expand its service area from its current CAF Phase II model-based supported areas and may bid on and be authorized to receive support in census blocks eligible for the Rural Digital Opportunity Fund that are adjacent to areas in which the carrier receives model-based support. Because the Commission expects the amount of model-based support that a carrier is receiving in a certain area to be higher than the amount of Rural Digital Opportunity Fund support it will receive, it expects these carriers to use the additional model-based support they receive in 2021 to begin the process of planning their buildouts for any adjacent, non-model-based support census blocks they may win.

129. In auction-eligible census blocks where a price cap carrier elects to receive a seventh year of model-based support and no qualifying bid is received in Phase I of the Rural Digital Opportunity Fund auction, the incumbent price cap carrier will continue to receive model-based support until the end of 2021. At that point, no further support will be provided to carriers serving these areas. As the Commission previously noted, the state-level commitment procedure for incumbent price cap carriers was intended to be limited in scope and duration. Though the Commission is providing carriers with a potential seventh year of support, this option is limited in duration and, as previously contemplated by the Commission, is a ''a gradual transition to the elimination of support.'' The Commission therefore concludes that extending support in these areas beyond the seven-year term simply to maintain substandard broadband levels would be an inefficient use of its limited universal service funds. Moreover, providing additional support simply to maintain fixed voice services in these areas is an inefficient use of funding given the ubiquity of mobile voice services. Instead, the Commission determines that these funds should be aimed at deploying high-speed broadband networks in rural communities across the country.

130. Likewise, census blocks where a price cap carrier elects to receive a seventh year of model-based support that are deemed ineligible for the Rural Digital Opportunity Fund auction will cease receiving model-based support at the end of 2021. Because the Commission, by excluding these blocks from Phase I of this auction, has determined that ongoing model-based support for these areas is no longer necessary, no further support will be provided to carriers serving these blocks after 2021. This approach is consistent with the Commission's decision to stop providing legacy support in areas deemed ineligible for both the CAF Phase II auction and the Rural Digital Opportunity Fund auction and allows funding to flow to areas in the greatest need of broadband deployment.

TRANSITION FOR PRICE CAP CARRIERS IN AREAS WHERE A CARRIER ELECTS TO RECEIVE A SEVENTH YEAR OF MODEL-BASED SUPPORT

Won at auction by the incumbent price cap carrier.	Receives model-based support through 2021; transitions to Rural Digital Opportunity Fund support on January 1, 2022.
Won at auction by a new provider	Receives model-based support through 2021; new provider receives RDOF support the first day of the month following authorization.
Not won at auction	Receives model-based support through 2021.
Not eligible for auction	Receives model-based support through 2021.

131. Several commenters sought clarification from the Commission on the responsibilities of an incumbent price cap carrier once a new provider is authorized to receive Rural Digital Opportunity Fund support in an area previously served by the incumbent. Frontier contended that price cap carriers must be released from incumbent obligations, including the obligation to provide voice services, in areas where they cease to receive Rural Digital Opportunity Fund support. USTelecom proposed requiring Rural Digital Opportunity Fund auction winners to offer voice services beginning in the first month after they receive Rural Digital Opportunity Fund support. Likewise, Windstream and INCOMPAS stated that new providers should be able to provide voice service on day one of their support term. Commenters also encouraged the Commission to address additional issues regarding the responsibilities of price cap carriers no longer receiving support to serve specific areas. Conversely, some opposed commenters' requests to eliminate ETC obligations and preempt state and discontinuance requirements.

132. The Commission previously addressed the issue of ETC obligations as funding transitions to new mechanisms. In the *December 2014 CAF Phase II Order,* the Commission concluded that it was in the public interest to forbear, pursuant to section 10 of the Communications Act of 1934, as amended, from enforcing a federal high-cost requirement that price cap carriers offer voice telephony service throughout their service areas pursuant to section 214(e)(1)(A) in three types of geographic areas: (1) Low-cost census blocks, (2) census blocks served by an unsubsidized competitor, as defined in the Commission's rules, offering voice and broadband at speeds of 10/1 Mbps to all eligible locations, and (3) census blocks where another ETC is receiving federal high-cost support to deploy modern networks capable of providing voice and broadband to fixed locations. At that time, the Commission also noted that price cap carriers would remain obligated to maintain existing voice service ''unless and until they receive authority under section 214(a) to discontinue that service.''

133. The same limited circumstances that required the Commission to grant forbearance to price cap carriers from the federal high-cost requirement to offer voice services in certain areas also exist here. As a result, in areas where a new provider is granted ETC status and is authorized to receive Rural Digital Opportunity Fund support, the incumbent price cap carrier will be relieved of its federal high-cost ETC obligation to offer voice telephony services in that area. As the Commission explained when it initially granted such forbearance, because there is another ETC in these areas required to offer voice and broadband services to fixed locations that meet the Commission's public service obligations, it concludes that enforcement of the requirement that price cap carriers offer voice telephony in these areas ''is not necessary to ensure that the charges, practices, or classifications of price cap carriers are just and reasonable and not unjustly or unreasonably discriminatory in specific geographic areas.'' The Commission also clarifies that this forbearance applies to census blocks deemed ineligible for the Rural Digital Opportunity Fund by virtue of being served by an unsubsidized competitor.

134. The Commission's decision to extend this limited forbearance to the Rural Digital Opportunity Fund context does not redefine price cap carriers' service areas or revoke price cap carriers' ETC designations in these areas. Thus, the Commission's action does not relieve ETCs of their other ''incumbent-specific obligations'' like interconnection and negotiating unbundled network elements pursuant to sections 251 and 252 of the Act. Moreover, these price cap carriers must continue to satisfy all Lifeline ETC obligations by offering voice telephony service to qualifying low-income households in areas in which they are subject to this limited forbearance. Finally, price cap carriers in these areas remain subject to other Title II requirements, including ensuring that voice telephony rates remain just and reasonable and the nondiscrimination obligations of sections 201 and 202 of the Act. Additionally, the Commission declines to preempt any state regulations or obligations to which these carriers may be subject. Commenters make only vague, unsubstantiated claims about burdensome state obligations in support of these requests. Price cap carriers must continue to comply with state requirements, including carrier of last resort obligations, to the extent applicable. The Commission similarly defers to the states' judgment in assuring that the local rates that price cap carriers offer in the areas from which the Commission forbears remain just and reasonable. Price cap carriers will remain subject to ETC obligations other than those covered by the Commission's forbearance unless or until they relinquish their ETC designations in those areas pursuant to section 214(e)(4). As the Commission transitions to a new funding mechanism to further its goal of supporting the deployment of both voice and broadband-capable networks, the existing service areas and corresponding obligations will help preserve existing voice service for consumers until the Rural Digital Opportunity Fund is fully implemented, and ensure that even the most remote, extremely high-cost areas are served, consistent with the Commission's universal service goals and principles.

135. More generally, price cap carriers must continue to maintain existing voice service until they receive discontinuance authority under section 214(a) of the Act and section 63.71 of the Commission's rules. As noted in this document, several commenters have requested that the Commission adopt a streamlined section 214 discontinuance process for price cap carriers that are replaced by a new provider receiving high-cost support. The Commission is not persuaded that such a process would benefit consumers in these areas. The Commission's discontinuance rules are designed to ensure that customers are fully informed of any proposed change that will reduce or end service, ensure appropriate oversight by the

Commission of such changes, and provide an orderly transition of service, as appropriate. This process allows the Commission to minimize harm to customers and to satisfy its obligation under the Act to protect the public interest.

136. In evaluating a section 214 discontinuance application, the Commission generally considers a number of factors, including the existence, availability, and adequacy of alternatives. By examining these factors, the Commission can ensure that the removal of a voice service option from the marketplace occurs in a manner that respects consumer expectations and needs. Thus, the Commission will deny a discontinuance application if it would leave customers or other end users in the proposed area without the ability to receive voice service or a reasonable alternative, or if the public convenience and necessity would be otherwise adversely affected. In such circumstances, the Commission will require price cap carriers to continue offering voice telephony services in those areas in those instances where there is no reasonable alternative. The Commission notes that an authorization to receive Rural Digital Opportunity Fund support includes an expectation that the provider will offer a reasonable voice service alternative satisfying section 63.602(b) of the Commission's rules, but it will retain the discontinuance process to confirm that it is doing so. Adopting a streamlined process for areas in which the Commission grants limited forbearance would prevent them from conducting the thorough review process necessary to ensure whether appropriate alternatives are available to consumers or the present or future public convenience and necessity would be adversely affected by such a discontinuance.

137. Finally, the Commission clarifies the specific timing to the grant of limited forbearance to incumbent price cap carriers that are replaced by a new provider. First, the Commission finds that these carriers will be relieved of their federal high-cost ETC obligation to offer voice telephony in specific census blocks on the first day of the month after a new ETC is authorized to receive Rural Digital Opportunity Fund support in those blocks. Thus, the new provider receiving Rural Digital Opportunity Fund support should be prepared to provide voice service throughout its service areas, either through its own facilities or a combination of its own and other ETC's facilities, on the first day of that month. Price cap carriers electing to receive a seventh year of model-based support will maintain their obligation to provide both voice and broadband service throughout 2021, as explained in this document. These carriers will be relieved of their federal high-cost ETC obligation to offer voice telephony in specific census blocks on January 1, 2022, regardless of when a new ETC is authorized to receive Rural Digital Opportunity Fund support. Finally, incumbent price cap carriers that decline a seventh year of model-based support will be relieved of the federal high-cost ETC obligation to offer voice telephony on the first day of the month after a new Rural Digital Opportunity Fund support recipient is authorized to receive support.

IV. Procedural Matters

A. Paperwork Reduction Act

138. This document contains new and modified information collection requirements subject to the Paperwork Reduction Act of 1995 (PRA) Public Law 104–13. It will be submitted to the Office of Management and Budget (OMB) for review under section 3507(d) of the PRA. OMB, the general public, and other Federal agencies will be invited to comment on the new or modified information collection requirements contained in this proceeding. In addition, the Commission notes that pursuant to the Small Business Paperwork Relief Act of 2002, it previously sought specific comment on how the Commission might further reduce the information collection burden for small business concerns with fewer than 25 employees.

B. Congressional Review Act

139. The Commission has determined, and the Administrator of the Office of Information and Regulatory Affairs, Office of Management and Budget, concurs that this rule is non-major under the Congressional Review Act, 5 U.S.C. 804(2). The Commission will send a copy of this Report and Order to Congress and the Government Accountability Office pursuant to 5 U.S.C. 801(a)(1)(A).

140. As required by the Regulatory Flexibility Act of 1980, as amended (RFA), an Initial Regulatory Flexibility Analysis (IRFA) was incorporated in the *Rural Digital Opportunity Fund NPRM.* The Commission sought written public comment on the proposals in the *Rural Digital Opportunity Fund NPRM,* including comment on the IRFA. The Commission did not receive any comments in response to this IRFA. This Final Regulatory Flexibility Analysis (FRFA) conforms to the RFA.

141. Bringing digital opportunity to Americans living on the wrong side of the digital divide continues to be the Federal Communication Commission's top priority. It is imperative that the Commission take prompt and expeditious action to deliver on its goal of connecting all Americans, no matter where they live and work. Without access to broadband, rural communities cannot connect to the digital economy and the opportunities for better education, employment, healthcare, and civic and social engagement it provides.

142. In recent years, the Commission has made tremendous strides toward its goal of making broadband available to all Americans. But while the digital divide is closing, more work remains to be done. Therefore, in this Order, the Commission adopts the framework for the Rural Digital Opportunity Fund. It builds on the successful model from 2018's Connect America Fund (CAF) Phase II auction, which allocated $1.488 billion to deploy networks serving more than 700,000 unserved rural homes and businesses across 45 states. The Rural Digital Opportunity Fund represents the Commission's single biggest step to close the digital divide by providing up to $20.4 billion to connect millions more rural homes and small businesses to high-speed broadband networks. It will ensure that networks stand the test of time by prioritizing higher network speeds and lower latency, so that those benefitting from these networks will be able to use tomorrow's internet applications as well as today's.

143. The RFA directs agencies to provide a description of, and where feasible, an estimate of the number of small entities that may be affected by the rules adopted herein. The RFA generally defines the term ''small entity'' as having the same meaning as the terms ''small business,'' ''small organization,'' and ''small governmental jurisdiction.'' In addition, the term ''small business'' has the same meaning as the term ''small-business concern'' under the Small Business Act. A ''small-business concern'' is one which: (1) Is independently owned and operated; (2) is not dominant in its field of operation; and (3) satisfies any additional criteria established by the SBA.

144. The Commission's actions, over time, may affect small entities that are not easily categorized at present. The Commission therefore describes here, at the outset, three comprehensive small entity size standards that could be directly affected herein. First, while there are industry specific size standards for small businesses that are used in the regulatory flexibility analysis, according to data from the

SBA's Office of Advocacy, in general a small business is an independent business having fewer than 500 employees. These types of small businesses represent 99.9% of all businesses in the United States which translates to 28.8 million businesses.

145. Next, the type of small entity described as a ''small organization'' is generally ''any not-for-profit enterprise which is independently owned and operated and is not dominant in its field.'' Nationwide, as of August 2016, there were approximately 356,494 small organizations based on registration and tax data filed by nonprofits with the Internal Revenue Service (IRS).

146. Finally, the small entity described as a ''small governmental jurisdiction'' is defined generally as ''governments of cities, towns, townships, villages, school districts, or special districts, with a population of less than fifty thousand.'' U.S. Census Bureau data from the 2012 Census of Governments indicate that there were 90,056 local governmental jurisdictions consisting of general purpose governments and special purpose governments in the United States. Of this number there were 37,132 General purpose governments (county, municipal and town or township) with populations of less than 50,000 and 12,184 Special purpose governments (independent school districts and special districts) with populations of less than 50,000. The 2012 U.S. Census Bureau data for most types of governments in the local government category show that the majority of these governments have populations of less than 50,000. Based on this data the Commission estimates that at least 49,316 local government jurisdictions fall in the category of ''small governmental jurisdictions.''

147. Small entities potentially affected by the rules herein include Wireline Providers, Wireless Providers (except Satellite), internet Service Providers (Broadband), Satellite Telecommunications, Electric Power Generators, Transmitters, and Distributors and All Other Telecommunications.

148. In the Order the Commission adopts rules that will apply in the Rural Digital Opportunity Fund auction. The Commission establishes four technology-neutral tiers of bids available for bidding with varying broadband speed and usage allowances, and for each tier will differentiate between bids that would offer either lower or higher latency. Like all high-cost ETCs, the Commission requires that Rural Digital Opportunity Fund recipients offer standalone voice service and offer voice and broadband service meeting the relevant performance requirements at rates that are reasonably comparable to rates offered in urban areas. All ETCs must advertise the availability of their voice services through their service areas, and the Commission requires support recipients also to advertise the availability of their broadband services within their service area. Rural Digital Opportunity Fund support recipients will also be subject to the same uniform framework for measuring speed and latency performance along with the accompanying compliance framework as all other recipients of high-cost support required to serve fixed locations.

149. In the Order, the Commission adopts a 10-year support term for Rural Digital Opportunity Fund support recipients along with interim service milestones by which support recipients must offer the required voice and broadband service to a required number of locations. The final service milestones will differ based on whether the Bureau determines that there are more or fewer locations than initially determined by the Connect America Cost Model. Rural Digital Opportunity Fund recipients must also offer service to newly built locations upon reasonable request if those locations were built before milestone year eight.

150. For entities that are interested in participating in the Rural Digital Opportunity Fund, adopted a two-step application process. The Commission requires applicants to submit a pre-auction short-form application that includes information regarding their ownership, technical and financial qualifications, the technologies they intend to use and the types of bids they intend to place, their operational history, and an acknowledgement of their responsibility to conduct due diligence. Commission staff will review the applications to determine if applicants are qualified to bid in the auction.

151. The Commission also requires winning bidders to submit a long-form application in which they will submit information about their qualifications, funding, and the networks they intend to use to meet their obligations. During the long-form application period, the Commission will require long-form applicants to obtain an ETC designation from the state or the Commission as relevant that covers the eligible areas in their winning bids. Prior to being authorized to receive support, the Commission will require long-form applicants to obtain an irrevocable stand-by letter of credit that meets its requirements from an eligible bank along with a bankruptcy opinion letter. The amount of support the letter of credit must cover will vary based on whether the support recipient has met certain service milestones. Commission staff will review the applications and submitted documentation to determine whether long-form applicants are qualified to be authorized to receive support. The Commission will subject winning bidders or long-form applicants that default during the long-form application process to forfeiture.

152. To monitor the use of Rural Digital Opportunity Fund support to ensure that it is being used for its intended purposes, the Commission will require support recipients to file location and technology data on an annual basis in the online High Cost Universal Broadband (HUBB) portal and to make certifications when they have met their service milestones. The Commission also will require applicants to file certain information in their annual FCC Form 481 reports including information regarding the community anchor institutions they serve, the support they used for capital expenditures, and certifications regarding meeting the Commission's performance obligations and available funds. Support recipients will also be subject to the annual section 54.314 certifications, the same record retention and audit requirements, and the same support reductions for untimely filings as other high-cost ETCs.

153. For support recipients that do not meet their Rural Digital Opportunity Fund obligations, the Commission will subject such support recipients to the framework for support reductions that is applicable to all high-cost ETCs that are required to meet defined service milestones and to the process the Commission adopted for drawing on letters of credit for the CAF Phase II auction, subject to some modifications regarding the amount of support that will be recovered after the sixth and eighth service milestones, as applicable. Additionally, if a Rural Digital Opportunity Fund support recipient believes it cannot meet the 40% service milestone, it must notify the Bureau and provide information explaining this expected deficiency. If a support recipient has not made such a notification and has deployed to fewer than 20% of the required number of locations by the third year service milestone, the Commission will find the recipient to be default rather than withholding the support and giving the support recipient an additional year to come into compliance. Support recipients may also seek waiver if as

they are deploying their networks there are not enough locations to meet their interim milestones.

154. The Commission also adopts specific support transition paths for census blocks served by price cap carriers receiving both legacy high-cost and model-based support, including delegating to the Wireline Competition Bureau the task of determining and implementing a mechanism that will enable price cap carriers to elect whether to receive an additional, seventh year of Phase II model-based support. Additionally, the Commission clarifies the continuing responsibilities of price cap carriers no longer receiving support to serve specific areas.

155. The RFA requires an agency to describe any significant alternatives that it has considered in reaching its approach, which may include the following four alternatives, among others: ''(1) the establishment of differing compliance or reporting requirements or timetables that take into account the resources available to small entities; (2) the clarification, consolidation, or simplification of compliance or reporting requirements under the rule for small entities; (3) the use of performance, rather than design, standards; and (4) an exemption from coverage of the rule, or any part thereof, for small entities.''

156. The Commission has considered the economic impact on small entities in reaching its final conclusions and taking action in this proceeding. The rules that the Commission adopts in the Order will provide greater certainty and flexibility for all carriers, including small entities. For example, the Commission adopts different performance standards for bidders to maximize the types of entities that can participate in the Rural Digital Opportunity Fund auction. Additionally, while the Commission declines to adopt any bidding credits, it does incorporate into the reserve prices for Tribal areas a Tribal Broadband Factor to provide an incentive for service providers, including small entities, to bid on and serve Tribal lands.

157. The Commission also expects that the minimum geographic area for bidding will be a census block group containing one or more eligible census blocks, but reserve the right to select census tracts when the Commission finalizes the auction design if necessary to limit the number of discrete biddable units. The Commission finds that this approach is preferable because it ensures that all interested bidders, including small entities, have flexibility to design a network that matches their business model and the technologies they intend to use. The Commission declines to adopt census blocks as the minimum geographic unit because there are significantly more eligible census blocks, increasing the complexity of the bidding process both for bidders, including small entities, and the bidding system and minimizing the potential for broad coverage by winning bidders.

158. The Commission declines to adopt a resource-intensive challenge process and instead have decided to rely on FCC Form 477 data and conduct a more streamlined challenge process to determine areas that are eligible for the Rural Digital Opportunity Fund auction. This means that service providers, including small entities, will have to file a FCC Form 477 as they are already required to do to ensure that the areas they serve are not overbuilt. Through the challenge process, interested parties may also identify areas that have been served since they have submitted the most recent publicly available FCC Form 477 data or identify areas that have been awarded funding through federal or state broadband subsidy programs to provide 25/3 Mbps or better service.

159. Based on lessons learned from the CAF Phase II auction, the Commission also adopts a two-step application process that will allow entities interested in bidding to submit a short-form application to be qualified in the auction that it found to be an appropriate but not burdensome screen to ensure participation by qualified providers, including small entities. Only if an applicant becomes a winning bidder will it be required to submit a long-form application which requires a more thorough review of an applicant's qualifications to be authorized to receive support. Like the CAF Phase II auction, the Commission provides two pathways for eligibility for the auction—both (1) for entities that have at least two years' experience providing a voice, broadband, and/or electric transmission or distribution service, and (2) for entities that have at least three years of audited financials and can obtain an acceptable letter of interest from an eligible bank. The Commission expects that by proposing to adopt two pathways for eligibility and to permit experienced entities that do not audit their financial statements in the ordinary course of business to wait to submit audited financials until after they are announced as winning bidders, more small entities will be able to participate in the auction. The Commission declines to collect less financial and technical information from experienced providers, finding that all existing service providers are not necessarily qualified to bid for additional universal service support and that the passage of time since its last review may impact qualifications. At the same time, the Commission also declines to require more detailed technical and operational showings as suggested by some commenters because it found these proposals would provide significant barriers to entry for participation by interested entities, including small entities.

160. The Commission also permits all long-form applicants, including small entities, to obtain their ETC designations after becoming winning bidders so that they do not have to go through the ETC designation process prior to finding out if they won support through the auction. The Commission declines to adopt the alternatives to letters of credit that were suggested by commenters because letters of credit better achieve the Commission's objective of protecting the public's funds. But recognizing that some CAF Phase II auction participants, including small entities, have expressed concerns about the costs of obtaining and maintaining a letter of credit, the Commission makes a modification to its requirements to allow support recipients to cover less support with their letters of credit and further reduce the value of their letters of credit once it has been verified that they have met certain service milestones.

161. The Commission declines to adopt additional performance requirements, like requiring specific subscription milestones, because it finds that they are likely to discourage many bidders, including small entities, from participating in the auction because they would risk losing funding in areas with low subscribership rates. The Commission also declines to adopt more aggressive service milestones and instead explain that entities with smaller projects have the opportunity to build-out faster than the service milestones.

162. The reporting requirements the Commission adopts for all Rural Digital Opportunity Fund support recipients are tailored to ensuring that support is used for its intended purpose and so that the Commission can monitor the progress of recipients in meeting their service milestones. The Commission finds that the importance of monitoring the use of the public's funds outweighs the burden of filing the required information on all entities, including small entities, particularly because much of the information that the Commission requires they report is

information the Commission expects they will already be collecting to ensure they comply with the terms and conditions of support and they will be able to submit their location data on a rolling basis to help minimize the burden of uploading a large number of locations at once.

V. Ordering Clauses

163. Accordingly, *it is ordered,* pursuant to the authority contained in sections 4(i), 214, 254, 303(r), and 403 of the Communications Act of 1934, as amended, 47 U.S.C. 154(i), 214, 254, 303(r), and 403, and §§ 1.1 and 1.425 of the Commission's rules, 47 CFR 1.1 and 1.425 this Report and Order *is adopted.* The Report and Order *shall be effective* 30 days after publication in the **Federal Register**, except for portions containing information collection requirements in §§ 54.313, 54.316, 54.804, and 54.806 that have not been approved by OMB. The Federal Communications Commission will publish a document in the **Federal Register** announcing the effective date of these provisions.

164. *It is further ordered* that Part 54 of the Commission's rules *is amended* as set forth in the following, and that any such rule amendments that contain new or modified information collection requirements that require approval by the Office of Management and Budget under the Paperwork Reduction Act *shall be effective* after announcement in the **Federal Register** of Office of Management and Budget approval of the rules, and on the effective date announced therein.

List of Subjects in 47 CFR Part 54

Communications common carriers, Health facilities, Infants and children, internet, Libraries, Reporting and recordkeeping requirements, Schools, Telecommunications, Telephone.

Federal Communications Commission.

Marlene Dortch,

Secretary, Office of the Secretary.

Final Rules

For the reasons discussed in the preamble, the Federal Communications Commission amends 47 CFR part 54 as follows:

PART 54—UNIVERSAL SERVICE

■ 1. The authority citation for part 54 continues to read as follows:

Authority: 47 U.S.C. 151, 154(i), 155, 201, 205, 214, 219, 220, 229, 254, 303(r), 403, 1004, and 1302, unless otherwise noted.

■ 2. Amend § 54.310 by adding paragraphs (g) and (h) to read as follows:

§ 54.310 Connect America Fund for Price Cap Territories—Phase II.

* * * * *

(g) *Extended term of model-based support.* Eligible telecommunications carriers receiving model-based support may elect to receive a seventh year of such support. An eligible telecommunications carrier electing to receive this additional year of support makes a state-level commitment to maintain the required voice and broadband services in the areas for which it receives support during this extended term. The Wireline Competition Bureau will implement a mechanism to enable an eligible telecommunications carrier to elect whether to receive an additional seventh year of support.

(h) *Transition to Rural Digital Opportunity Fund support.* (1) In areas where the eligible telecommunications carrier elects to receive an optional seventh year of model-based support pursuant to paragraph (g) of this section, it shall receive such support for a full calendar year, regardless of the disposition of these areas in the Rural Digital Opportunity Fund auction.

(i) If the eligible telecommunications carrier becomes the winning bidder in the Rural Digital Opportunity Fund auction in these areas, it shall continue to receive model-based support through December 31, 2021. Thereafter, it shall receive monthly support in the amount of its Rural Digital Opportunity Fund winning bid.

(ii) If another provider is the winning bidder in the Rural Digital Opportunity Fund auction in these areas, the new provider shall receive monthly support in the amount of its Rural Digital Opportunity Fund winning bid starting the first day of the month following its authorization by the Wireline Competition Bureau. The eligible telecommunications carrier shall continue to receive model-based support for these areas through December 31, 2021.

(iii) If there is no authorized Rural Digital Opportunity Fund auction support recipient in these areas or if these areas are deemed ineligible for the Rural Digital Opportunity Fund auction, the eligible telecommunications carrier shall continue to receive model-based support for these areas through December 31, 2021. Thereafter, it shall receive no additional support.

(2) In areas where the eligible telecommunications carrier declines to receive an optional seventh year of model-based support pursuant to paragraph (g) of this section, it shall cease receiving model-based support for these areas on December 31, 2020.

■ 3. Amend § 54.312 by adding paragraph (e) to read as follows:

§ 54.312 Connect America Fund for Price Cap Territories—Phase I.

* * * * *

(e) *Eligibility for support after Rural Digital Opportunity Fund auction.* (1) A price cap carrier that receives monthly baseline support pursuant to this section and is a winning bidder in the Rural Digital Opportunity Fund auction shall receive support at the same level as described in paragraph (a) of this section for such area until the Wireline Competition Bureau determines whether to authorize the carrier to receive Rural Digital Opportunity Fund auction support for the same area. Upon the Wireline Competition Bureau's release of a public notice approving a price cap carrier's application submitted pursuant to § 54.315(b) and authorizing the carrier to receive Rural Digital Opportunity Fund auction support, the carrier shall no longer receive support at the level of monthly baseline support pursuant to this section for such area. Thereafter, the carrier shall receive monthly support in the amount of its Rural Digital Opportunity Fund winning bid.

(2) Starting the first day of the month following the release of the final eligible areas list for the Rural Digital Opportunity Fund auction, as determined by the Wireline Competition Bureau, no price cap carrier that receives monthly baseline support pursuant to this section shall receive such monthly baseline support for areas that are ineligible for the Rural Digital Opportunity Fund auction.

(3) Starting the first day of the month following the close of Phase I of the Rural Digital Opportunity Fund auction, no price cap carrier that receives monthly baseline support pursuant to this section shall receive such monthly baseline support for areas where Rural Digital Opportunity Fund auction support is not awarded at auction for an eligible area.

(4) Starting the first day of the month following the authorization of Rural Digital Opportunity Fund auction support to a winning bidder other than the price cap carrier that receives monthly baseline support pursuant to this section for such area, the price cap carrier shall no longer receive monthly baseline support pursuant to this section.

■ 4. Amend § 54.313 by revising paragraphs (e) introductory text, (e)(2) introductory text and (e)(2)(iii) to read as follows:

§ 54.313 Annual reporting requirements for high-cost recipients.

* * * * *

(e) In addition to the information and certifications in paragraph (a) of this section, the requirements in paragraphs (e)(1) and (2) of this section apply to recipients of Phase II, Rural Digital Opportunity Fund, Uniendo a Puerto Rico Fund Stage 2 fixed support, and Connect USVI Fund Stage 2 fixed support:

* * * * *

(2) Any recipient of Phase II, Rural Digital Opportunity Fund, Uniendo a Puerto Rico Fund Stage 2 fixed, or Connect USVI Fund Stage 2 fixed support awarded through a competitive bidding or application process shall provide:

* * * * *

(iii) Starting the first July 1st after meeting the final service milestone in § 54.310(c) or § 54.802(c) of this chapter until the July 1st after the Phase II recipient's or Rural Digital Opportunity Fund recipient's support term has ended, a certification that the Phase II–funded network that the Phase II auction recipient operated in the prior year meets the relevant performance requirements in § 54.309 of this chapter, or that the network that the Rural Digital Opportunity Fund recipient operated in the prior year meets the relevant performance requirements in § 54.805 for the Rural Digital Opportunity Fund.

* * * * *

■ 5. Amend § 54.316 by revising paragraph (a)(4), adding paragraph (a)(8), and revising paragraphs (b)(5) and (c)(1) to read as follows:

§ 54.316 Broadband deployment reporting and certification requirements for high-cost recipients.

(a) * * *

(4) Recipients subject to the requirements of § 54.310(c) shall report the number of locations for each state and locational information, including geocodes, where they are offering service at the requisite speeds. Recipients of Connect America Phase II auction support shall also report the technology they use to serve those locations.

* * * * *

(8) Recipients subject to the requirements of § 54.802(c) shall report the number of locations for each state and locational information, including geocodes, where they are offering service at the requisite speeds. Recipients of Rural Digital Opportunity Fund support shall also report the technology they use to serve those locations.

(b) * * *

(5) Recipients of Rural Digital Opportunity Fund support shall provide: No later than March 1 following each service milestone specified by the Commission, a certification that by the end of the prior support year, it was offering broadband meeting the requisite public interest obligations to the required percentage of its supported locations in each state.

* * * * *

(c) * * *

(1) Price cap carriers that accepted Phase II model-based support, rate-of-return carriers, and recipients of Rural Digital Opportunity Fund support must submit the annual reporting information required by March 1 as described in paragraphs (a) and (b) of this section. Eligible telecommunications carriers that file their reports after the March 1 deadline shall receive a reduction in support pursuant to the following schedule:

* * * * *

■ 6. Revise subpart J to read as follows:

Subpart J—Rural Digital Opportunity Fund

Sec.

54.801 Use of competitive bidding for Rural Digital Opportunity Fund.
54.802 Rural Digital Opportunity Fund geographic areas, deployment obligations, and support disbursements.
54.803 Rural Digital Opportunity Fund provider eligibility.
54.804 Rural Digital Opportunity Fund application process.
54.805 Rural Digital Opportunity Fund public interest obligations.
54.806 Rural Digital Opportunity Fund reporting obligations, compliance, and recordkeeping.

Subpart J—Rural Digital Opportunity Fund

§ 54.801 Use of competitive bidding for Rural Digital Opportunity Fund.

The Commission will use competitive bidding, as provided in part 1, subpart AA of this chapter, to determine the recipients of Rural Digital Opportunity Fund support and the amount of support that they may receive for specific geographic areas, subject to applicable post-auction procedures.

§ 54.802 Rural Digital Opportunity Fund geographic areas, deployment obligations, and support disbursements.

(a) *Geographic areas eligible for support.* Rural Digital Opportunity Fund support may be made available for census blocks or other areas identified as eligible by public notice.

(b) *Term of support.* Rural Digital Opportunity Fund support shall be provided for ten years.

(c) *Deployment obligation.* (1) All recipients of Rural Digital Opportunity Fund support must complete deployment to 40 percent of the required number of locations as determined by the Connect America Cost Model by the end of the third year, to 60 percent by the end of the fourth year, and to 80 percent by the end of the fifth year. The Wireline Competition Bureau will publish updated location counts no later than the end of the sixth year. A support recipient's final service milestones will depend on whether the Wireline Competition Bureau determines there are more or fewer locations than determined by the Connect America Cost Model in the relevant areas as follows:

(i) *More Locations.* After the Wireline Competition Bureau adopts updated location counts, in areas where there are more locations than the number of locations determined by the Connect America Cost Model, recipients of Rural Digital Opportunity Fund support must complete deployment to 100 percent of the number of locations determined by the Connect America Cost Model by the end of the sixth year. Recipients of Rural Digital Opportunity Fund support must then complete deployment to 100 percent of the additional number of locations determined by the Wireline Competition Bureau's updated location count by end of the eighth year. If the new location count exceeds 35% of the number of locations determined by the Connect America Cost Model within their area in each state, recipients of Rural Digital Opportunity Fund support will have the opportunity to seek additional support or relief.

(ii) *Fewer Locations.* In areas where there are fewer locations than the number of locations determined by the Connect America Cost Model, a Rural Digital Opportunity Fund support recipient must notify the Wireline Competition Bureau no later than March 1 following the fifth year of deployment. Upon confirmation by the Wireline Competition Bureau, Rural Digital Opportunity Fund support recipients must complete deployment to the number of locations required by the new location count by the end of the sixth year. Support recipients for which the new location count is less than 65 percent of the Connect America Cost Model locations within their area in each state shall have the support amount reduced on a pro rata basis by the number of reduced locations.

(iii) *Newly Built Locations.* In addition to offering the required service to the updated number of locations identified by the Wireline Competition Bureau, Rural Digital Opportunity Fund support

recipients must offer service to locations built since the revised count, upon reasonable request. Support recipients are not required to deploy to any location built after milestone year eight.

(d) *Disbursement of Rural Digital Opportunity Fund funding.* An eligible telecommunications carrier will be advised by public notice when it is authorized to receive support. The public notice will detail how disbursements will be made.

§ 54.803 Rural Digital Opportunity Fund provider eligibility.

(a) Any eligible telecommunications carrier is eligible to receive Rural Digital Opportunity Fund support in eligible areas.

(b) An entity may obtain eligible telecommunications carrier designation after public notice of winning bidders in the Rural Digital Opportunity Fund auction.

(c) To the extent any entity seeks eligible telecommunications carrier designation prior to public notice of winning bidders for Rural Digital Opportunity Fund support, its designation as an eligible telecommunications carrier may be conditioned subject to receipt of Rural Digital Opportunity Fund support.

(d) Any Connect America Phase II auction participant that defaulted on all of its Connect America Phase II auction winning bids is barred from participating in the Rural Digital Opportunity Fund.

§ 54.804 Rural Digital Opportunity Fund application process.

(a) In addition to providing information specified in § 1.21001(b) of this chapter and any other information required by the Commission, any applicant to participate in competitive bidding for Rural Digital Opportunity Fund support shall:

(1) Provide ownership information as set forth in § 1.2112(a) of this chapter;

(2) Certify that the applicant is financially and technically qualified to meet the public interest obligations established for Rural Digital Opportunity Fund support;

(3) Disclose its status as an eligible telecommunications carrier to the extent applicable and certify that it acknowledges that it must be designated as an eligible telecommunications carrier for the area in which it will receive support prior to being authorized to receive support;

(4) Describe the technology or technologies that will be used to provide service for each bid;

(5) Submit any information required to establish eligibility for any bidding weights adopted by the Commission in an order or public notice;

(6) To the extent that an applicant plans to use spectrum to offer its voice and broadband services, demonstrate it has the proper authorizations, if applicable, and access to operate on the spectrum it intends to use, and that the spectrum resources will be sufficient to cover peak network usage and deliver the minimum performance requirements to serve all of the fixed locations in eligible areas, and certify that it will retain its access to the spectrum for the term of support;

(7) Submit operational and financial information.

(i) If applicable, the applicant should submit a certification that it has provided a voice, broadband, and/or electric transmission or distribution service for at least two years or that it is a wholly-owned subsidiary of such an entity, and specifying the number of years the applicant or its parent company has been operating, and submit the financial statements from the prior fiscal year that are audited by an independent certified public accountant. If the applicant is not audited in the ordinary course of business, in lieu of submitting audited financial statements it must submit unaudited financial statements from the prior fiscal year and certify that it will provide financial statements from the prior fiscal year that are audited by an independent certified public accountant by a specified deadline during the long-form application review process.

(A) If the applicant has provided a voice and/or broadband service it must certify that it has filed FCC Form 477s as required during this time period.

(B) If the applicant has operated only an electric transmission or distribution service, it must submit qualified operating or financial reports that it has filed with the relevant financial institution for the relevant time period along with a certification that the submission is a true and accurate copy of the reports that were provided to the relevant financial institution.

(ii) If an applicant cannot meet the requirements in paragraph (a)(7)(i) of this section, in the alternative it must submit the audited financial statements from the three most recent fiscal years and a letter of interest from a bank meeting the qualifications set forth in paragraph (c)(2) of this section, that the bank would provide a letter of credit as described in paragraph (c) of this section to the bidder if the bidder were selected for bids of a certain dollar magnitude.

(8) Certify that the applicant has performed due diligence concerning its potential participation in the Rural Digital Opportunity Fund.

(b) Application by winning bidders for Rural Digital Opportunity Fund support—

(1) *Deadline.* As provided by public notice, winning bidders for Rural Digital Opportunity Fund support or their assignees shall file an application for Rural Digital Opportunity Fund support no later than the number of business days specified after the public notice identifying them as winning bidders.

(2) *Application contents.* An application for Rural Digital Opportunity Fund support must contain:

(i) Identification of the party seeking the support, including ownership information as set forth in § 1.2112(a) of this chapter;

(ii) Certification that the applicant is financially and technically qualified to meet the public interest obligations for Rural Digital Opportunity Fund support in each area for which it seeks support;

(iii) Certification that the applicant will meet the relevant public interest obligations, including the requirement that it will offer service at rates that are equal or lower to the Commission's reasonable comparability benchmarks for fixed wireline services offered in urban areas;

(iv) A description of the technology and system design the applicant intends to use to deliver voice and broadband service, including a network diagram which must be certified by a professional engineer. The professional engineer must certify that the network is capable of delivering, to at least 95 percent of the required number of locations in each relevant state, voice and broadband service that meets the requisite performance requirements for Rural Digital Opportunity Fund support;

(v) Certification that the applicant will have available funds for all project costs that exceed the amount of support to be received from the Rural Digital Opportunity Fund for the first two years of its support term and that the applicant will comply with all program requirements, including service milestones;

(vi) A description of how the required construction will be funded, including financial projections that demonstrate the applicant can cover the necessary debt service payments over the life of the loan, if any;

(vii) Certification that the party submitting the application is authorized to do so on behalf of the applicant; and

(viii) Such additional information as the Commission may require.

(3) *Letter of credit commitment letter.* No later than the number of days

provided by public notice, the long-form applicant shall submit a letter from a bank meeting the eligibility requirements outlined in paragraph (c) of this section committing to issue an irrevocable stand-by letter of credit, in the required form, to the long-form applicant. The letter shall at a minimum provide the dollar amount of the letter of credit and the issuing bank's agreement to follow the terms and conditions of the Commission's model letter of credit.

(4) *Audited financial statements.* No later than the number of days provided by public notice, if a long-form applicant or a related entity did not submit audited financial statements in the relevant short-form application as required, the long-form applicant must submit the financial statements from the prior fiscal year that are audited by an independent certified public accountant.

(5) *Eligible telecommunications carrier designation.* No later than 180 days after the public notice identifying it as a winning bidder, the long-form applicant shall certify that it is an eligible telecommunications carrier in any area for which it seeks support and submit the relevant documentation supporting that certification.

(6) *Application processing.* (i) No application will be considered unless it has been submitted in an acceptable form during the period specified by public notice. No applications submitted or demonstrations made at any other time shall be accepted or considered.

(ii) Any application that, as of the submission deadline, either does not identify the applicant seeking support as specified in the public notice announcing application procedures or does not include required certifications shall be denied.

(iii) An applicant may be afforded an opportunity to make minor modifications to amend its application or correct defects noted by the applicant, the Commission, the Administrator, or other parties. Minor modifications include correcting typographical errors in the application and supplying non-material information that was inadvertently omitted or was not available at the time the application was submitted.

(iv) Applications to which major modifications are made after the deadline for submitting applications shall be denied. Major modifications include, but are not limited to, any changes in the ownership of the applicant that constitute an assignment or change of control, or the identity of the applicant, or the certifications required in the application.

(v) After receipt and review of the applications, a public notice shall identify each long-form applicant that may be authorized to receive Rural Digital Opportunity Fund support after the long-form applicant submits a letter of credit and an accompanying opinion letter as described in paragraph (c) of this section, in a form acceptable to the Commission. Each such long-form applicant shall submit a letter of credit and accompanying opinion letter as required by paragraph (c) of this section, in a form acceptable to the Commission no later than the number of business days provided by public notice.

(vi) After receipt of all necessary information, a public notice will identify each long-form applicant that is authorized to receive Rural Digital Opportunity Fund support.

(c) *Letter of credit.* Before being authorized to receive Rural Digital Opportunity Fund support, a winning bidder shall obtain an irrevocable standby letter of credit which shall be acceptable in all respects to the Commission.

(1) *Value.* Each recipient authorized to receive Rural Digital Opportunity Fund support shall maintain the standby letter of credit in an amount equal to, at a minimum, one year of support, until the Universal Service Administrative Company has verified that the recipient has served 100 percent of the Connect America Cost Model-determined location total (or the adjusted Connect America Cost Model location count if there are fewer locations) by the end of year six.

(i) For year one of a recipient's support term, it must obtain a letter of credit valued at an amount equal to one year of support.

(ii) For year two of a recipient's support term, it must obtain a letter of credit valued at an amount equal to eighteen months of support.

(iii) For year three of a recipient's support term, it must obtain a letter of credit valued at an amount equal to two years of support.

(iv) For year four of a recipient's support term, it must obtain a letter of credit valued at an amount equal to three years of support.

(v) A recipient may obtain a new letter of credit or renew its existing letter of credit so that it is valued at an amount equal to one year of support once it meets its optional or required service milestones. The recipient may obtain or renew this letter of credit upon verification of its buildout by the Universal Service Administrative Company. The recipient may maintain its letter of credit at this level for the remainder of its deployment term, so long as the Universal Service Administrative Company verifies that the recipient successfully and timely meets its remaining required service milestones.

(vi) A recipient that fails to meet its required service milestones must obtain a new letter of credit or renew its existing letter of credit at an amount equal to its existing letter of credit, plus an additional year of support, up to a maximum of three years of support.

(vii) A recipient that fails to meet two or more required service milestones must maintain a letter of credit in the amount of three year of support and may be subject to additional non-compliance penalties as described in § 54.320(d).

(2) *Bank eligibility.* The bank issuing the letter of credit shall be acceptable to the Commission. A bank that is acceptable to the Commission is:

(i) Any United States bank

(A) That is insured by the Federal Deposit Insurance Corporation, and

(B) That has a bank safety rating issued by Weiss of B− or better; or

(ii) CoBank, so long as it maintains assets that place it among the 100 largest United States Banks, determined on basis of total assets as of the calendar year immediately preceding the issuance of the letter of credit and it has a long-term unsecured credit rating issued by Standard & Poor's of BBB− or better (or an equivalent rating from another nationally recognized credit rating agency); or

(iii) The National Rural Utilities Cooperative Finance Corporation, so long as it maintains assets that place it among the 100 largest United States Banks, determined on basis of total assets as of the calendar year immediately preceding the issuance of the letter of credit and it has a long-term unsecured credit rating issued by Standard & Poor's of BBB− or better (or an equivalent rating from another nationally recognized credit rating agency); or

(iv) Any non-United States bank:

(A) That is among the 100 largest non-U.S. banks in the world, determined on the basis of total assets as of the end of the calendar year immediately preceding the issuance of the letter of credit (determined on a U.S. dollar equivalent basis as of such date);

(B) Has a branch office in the District of Columbia or such other branch office agreed to by the Commission;

(C) Has a long-term unsecured credit rating issued by a widely-recognized credit rating agency that is equivalent to

a BBB− or better rating by Standard & Poor's; and

(D) Issues the letter of credit payable in United States dollars

(3) *Bankruptcy opinion letter.* A long-form applicant for Rural Digital Opportunity Fund support shall provide with its letter of credit an opinion letter from its legal counsel clearly stating, subject only to customary assumptions, limitations, and qualifications, that in a proceeding under Title 11 of the United States Code, 11 U.S.C. 101 *et seq.* (the ''Bankruptcy Code''), the bankruptcy court would not treat the letter of credit or proceeds of the letter of credit as property of the winning bidder's bankruptcy estate under section 541 of the Bankruptcy Code.

(4) *Non-compliance.* .Authorization to receive Rural Digital Opportunity Fund support is conditioned upon full and timely performance of all of the requirements set forth in this section, and any additional terms and conditions upon which the support was granted.

(i) Failure by a Rural Digital Opportunity Fund support recipient to meet its service milestones for the location totals determined by the Connect America Cost Model, or the location total that is adjusted by the Wireline Competition Bureau for those areas where there are fewer locations than the number of locations determined by the Connect America Cost Model, as required by § 54.802 will trigger reporting obligations and the withholding of support as described in § 54.320(d). Failure to come into full compliance during the relevant cure period as described in §§ 54.320(d)(1)(iv)(B) or 54.320(d)(2) will trigger a recovery action by the Universal Service Administrative Company as described in § 54.320(d)(1)(iv)(B) or § 54.806(c)(1)(i), as applicable. If the Rural Digital Opportunity Fund recipient does not repay the requisite amount of support within six months, the Universal Service Administrative Company will be entitled to draw the entire amount of the letter of credit and may disqualify the Rural Digital Opportunity Fund support recipient from the receipt of Rural Digital Opportunity Fund support or additional universal service support.

(ii) The default will be evidenced by a letter issued by the Chief of the Wireline Competition Bureau, or its respective designees, which letter, attached to a standby letter of credit draw certificate, shall be sufficient for a draw on the standby letter of credit for the entire amount of the standby letter of credit.

§ 54.805 Rural Digital Opportunity Fund public interest obligations.

(a) Recipients of Rural Digital Opportunity Fund support are required to offer broadband service with latency suitable for real-time applications, including Voice over internet Protocol, and usage capacity that is reasonably comparable to comparable offerings in urban areas, at rates that are reasonably comparable to rates for comparable offerings in urban areas. For purposes of determining reasonable comparable usage capacity, recipients are presumed to meet this requirement if they meet or exceed the usage level announced by public notice issued by the Wireline Competition Bureau. For purposes of determining reasonable comparability of rates, recipients are presumed to meet this requirement if they offer rates at or below the applicable benchmark to be announced annually by public notice issued by the Wireline Competition Bureau, or no more than the non-promotional prices charged for a comparable fixed wireline service in urban areas in the state or U.S. Territory where the eligible telecommunications carrier receives support.

(b) Recipients of Rural Digital Opportunity Fund support are required to offer broadband service meeting the performance standards for the relevant performance tier.

(1) Rural Digital Opportunity Fund support recipients meeting the minimum performance tier standards are required to offer broadband service at actual speeds of at least 25 Mbps downstream and 3 Mbps upstream and offer a minimum usage allowance of 250 GB per month, or that reflects the average usage of a majority of fixed broadband customers as announced annually by the Wireline Competition Bureau over the 10-year term.

(2) Rural Digital Opportunity Fund support recipients meeting the baseline performance tier standards are required to offer broadband service at actual speeds of at least 50 Mbps downstream and 5 Mbps upstream and offer a minimum usage allowance of 250 GB per month, or that reflects the average usage of a majority of fixed broadband customers as announced annually by the Wireline Competition Bureau over the 10-year term.

(2) Rural Digital Opportunity Fund support recipients meeting the above-baseline performance tier standards are required to offer broadband service at actual speeds of at least 100 Mbps downstream and 20 Mbps upstream and offer at least 2 terabytes of monthly usage.

(3) Rural Digital Opportunity Fund support recipients meeting the Gigabit performance tier standards are required to offer broadband service at actual speeds of at least 1 Gigabit per second downstream and 500 Mbps upstream and offer at least 2 terabytes of monthly usage.

(4) For each of the tiers in paragraphs (b)(1) through (3) of this section, bidders are required to meet one of two latency performance levels:

(i) Low-latency bidders will be required to meet 95 percent or more of all peak period measurements of network round trip latency at or below 100 milliseconds; and

(ii) High-latency bidders will be required to meet 95 percent or more of all peak period measurements of network round trip latency at or below 750 ms and, with respect to voice performance, demonstrate a score of four or higher using the Mean Opinion Score (MOS).

(c) Recipients of Rural Digital Opportunity Fund support are required to bid on category one telecommunications and internet access services in response to a posted FCC Form 470 seeking broadband service that meets the connectivity targets for the schools and libraries universal service support program for eligible schools and libraries (as described in § 54.501) located within any area in a census block where the carrier is receiving Rural Digital Opportunity Fund support. Such bids must be at rates reasonably comparable to rates charged to eligible schools and libraries in urban areas for comparable offerings.

§ 54.806 Rural Digital Opportunity Fund reporting obligations, compliance, and recordkeeping.

(a) Recipients of Rural Digital Opportunity Fund support shall be subject to the reporting obligations set forth in §§ 54.313, 54.314, and 54.316.

(b) Recipients of Rural Digital Opportunity Fund support shall be subject to the compliance measures, recordkeeping requirements and audit requirements set forth in § 54.320(a)–(c).

(c) Recipients of Rural Digital Opportunity Fund support shall be subject to the non-compliance measures set forth in § 54.320(d) subject to the following modifications related to the recovery of support.

(1) If the support recipient does not report it has come into full compliance after the grace period for its sixth year or eighth year service milestone as applicable or if USAC determines in the course of a compliance review that the eligible telecommunications carrier does not have sufficient evidence to demonstrate that it is offering service to all of the locations required by the sixth

or eighth year service milestone as set forth in § 54.320(d)(3):

(i) Sixth year service milestone. Support will be recovered as follows after the sixth year service milestone grace period or if USAC later determines in the course of a compliance review that a support recipient does not have sufficient evidence to demonstrate that it was offering service to all of the locations required by the sixth year service milestone:

(A) If an ETC has deployed to 95 percent or more of the Connect America Cost Model location count or the adjusted Connect America Cost Model location count if there are fewer locations, but less than 100 percent, USAC will recover an amount of support that is equal to 1.25 times the average amount of support per location received in the state for that ETC over the support term for the relevant number of locations;

(B) If an ETC has deployed to 90 percent or more of the Connect America Cost Model location count or the adjusted Connect America Cost Model location count if there are fewer locations, but less than 95 percent, USAC will recover an amount of support that is equal to 1.5 times the average amount of support per location received in the state for that ETC over the support term for the relevant number of locations, plus 5 percent of the support recipient's total Rural Digital Opportunity Fund support authorized over the 10-year support term for that state;

(C) If an ETC has deployed to fewer than 90 percent of the Connect America Cost Model location count or the adjusted Connect America Cost Model location count if there are fewer locations, USAC will recover an amount of support that is equal to 1.75 times the average amount of support per location received in the state for that ETC over the support term for the relevant number of locations, plus 10 percent of the support recipient's total Rural Digital Opportunity Fund support authorized over the 10-year support term for that state.

(ii) Eighth year service milestone. If a Rural Digital Opportunity Fund support recipient is required to serve more new locations than determined by the Connect America Cost Model, support will be recovered as follows after the eighth year service milestone grace period or if USAC later determines in the course of a compliance review that a support recipient does not have sufficient evidence to demonstrate that it was offering service to all of the locations required by the eighth year service milestone:

(A) If an ETC has deployed to 95 percent or more of its new location count, but less than 100 percent, USAC will recover an amount of support that is equal to the average amount of support per location received in the state for that ETC over the support term for the relevant number of locations;

(B) If an ETC has deployed to 90 percent or more of its new location count, but less than 95 percent, USAC will recover an amount of support that is equal to 1.25 times the average amount of support per location received in the state for that ETC over the support term for the relevant number of locations;

(C) If an ETC has deployed to 85 percent or more of its new location count, but less than 90 percent, USAC will recover an amount of support that is equal to 1.5 times the average amount of support per location received in the state for that ETC over the support term for the relevant number of locations, plus 5 percent of the support recipient's total Rural Digital Opportunity Fund support authorized over the 10-year support term for that state;

(D) If an ETC has deployed to less than 85 percent of its new location count, USAC will recover an amount of support that is equal to 1.75 times the average amount of support per location received in the state for that ETC over the support term for the relevant number of locations, plus 10 percent of the support recipient's total Rural Digital Opportunity Fund support authorized over the 10-year support term for that state.

(2) Any support recipient that believes it cannot meet the third-year service milestone must notify the Wireline Competition Bureau within 10 business days of the third-year service milestone deadline and provide information explaining this expected deficiency. If a support recipient has not made such a notification by March 1 following the third-year service milestone, and has deployed to fewer than 20 percent of the required number of locations by the end of the third year, the recipient will immediately be in default and subject to support recovery. The Tier 4 status six-month grace period as set forth in § 54.320(d)(iv) will not be applicable.

[FR Doc. 2020–03135 Filed 3–9–20; 8:45 am]

BILLING CODE 6712–01–P

DEPARTMENT OF COMMERCE

National Oceanic and Atmospheric Administration

50 CFR Part 679

[Docket No. 200221–0062]

RIN 0648–XY201

Fisheries of the Exclusive Economic Zone Off Alaska; Gulf of Alaska; Final 2020 and 2021 Harvest Specifications for Groundfish

AGENCY: National Marine Fisheries Service (NMFS), National Oceanic and Atmospheric Administration (NOAA), Commerce.

ACTION: Final rule; harvest specifications and closures.

SUMMARY: NMFS announces final 2020 and 2021 harvest specifications, apportionments, and Pacific halibut prohibited species catch limits for the groundfish fishery of the Gulf of Alaska (GOA). This action is necessary to establish harvest limits for groundfish during the remainder of the 2020 and the start of the 2021 fishing years and to accomplish the goals and objectives of the Fishery Management Plan for Groundfish of the Gulf of Alaska. The 2020 harvest specifications supersede those previously set in the final 2019 and 2020 harvest specifications, and the 2021 harvest specifications will be superseded in early 2021 when the final 2021 and 2022 harvest specifications are published. The intended effect of this action is to conserve and manage the groundfish resources in the GOA in accordance with the Magnuson-Stevens Fishery Conservation and Management Act.

DATES: Harvest specifications and closures are effective at 1200 hours, Alaska local time (A.l.t.), March 10, 2020, through 2400 hours, A.l.t., December 31, 2021.

ADDRESSES: Electronic copies of the Final Alaska Groundfish Harvest Specifications Environmental Impact Statement (EIS), Record of Decision (ROD), the annual Supplementary Information Reports (SIRs) to the EIS, and the Initial Regulatory Flexibility Analysis (IRFA) prepared for this action are available from *https://alaskafisheries.noaa.gov.* The 2019 Stock Assessment and Fishery Evaluation (SAFE) report for the groundfish resources of the GOA, dated November 2019, and SAFE reports for previous years are available from the North Pacific Fishery Management Council (Council) at 1007 West 3rd Avenue, Suite 400, Anchorage, AK

99501, phone 907–271–2809, or from the Council's website at *https://www.npfmc.org.*

FOR FURTHER INFORMATION CONTACT: Obren Davis, 907–586–7228.

SUPPLEMENTARY INFORMATION: NMFS manages the GOA groundfish fisheries in the exclusive economic zone of the GOA under the Fishery Management Plan for Groundfish of the Gulf of Alaska (FMP). The Council prepared the FMP under the authority of the Magnuson-Stevens Fishery Conservation and Management Act (Magnuson-Stevens Act), 16 U.S.C. 1801 *et seq.* Regulations governing U.S. fisheries and implementing the FMP appear at 50 CFR parts 600, 679, and 680.

The FMP and its implementing regulations require that NMFS, after consultation with the Council, specify the total allowable catch (TAC) for each target species, the sum of which must be within the optimum yield (OY) range of 116,000 to 800,000 metric tons (mt) (50 CFR 679.20(a)(1)(i)(B)). Section 679.20(c)(1) further requires that NMFS publish and solicit public comment on proposed annual TACs and apportionments thereof, Pacific halibut prohibited species catch (PSC) limits, and seasonal allowances of pollock and Pacific cod. Upon consideration of public comment received under § 679.20(c)(1), NMFS must publish notice of final harvest specifications for up to two fishing years as annual TACs and apportionments, Pacific halibut PSC limits, and seasonal allowances of pollock and Pacific cod, per § 679.20(c)(3)(ii). The final harvest specifications set forth in Tables 1 through 29 of this rule reflect the outcome of this process, as required at § 679.20(c).

The proposed 2020 and 2021 harvest specifications for groundfish of the GOA and Pacific halibut PSC limits were published in the **Federal Register** on December 3, 2019 (84 FR 66109). Comments were invited and accepted through January 2, 2020. NMFS received two letters of comment on the proposed harvest specifications; the comments are summarized and responded to in the ''Comments and Responses'' section of this rule. No changes were made to the final rule in response to the letters of comment received. In December 2019, NMFS consulted with the Council regarding the 2020 and 2021 harvest specifications. After considering public comment, as well as biological and socioeconomic data that were available at the Council's December 2019 meeting, NMFS is implementing the final 2020 and 2021 harvest specifications, as recommended by the Council. For 2020, the sum of the TAC amounts is 399,239 mt. For 2021, the sum of the TAC amounts is 407,982 mt.

Other Actions Affecting the 2020 and 2021 Harvest Specifications

Reclassify Sculpins as an Ecosystem Component Species

In October 2019, the Council recommended that sculpins be reclassified in the FMP as an ''ecosystem component'' species, which is a category of non-target species that are not in need of conservation and management. Currently, NMFS annually sets an overfishing level (OFL), Acceptable Biological Catch (ABC), and TAC for sculpins in the GOA groundfish harvest specifications. Under the Council's recommended action, OFL, ABC, and TAC specifications for sculpins would no longer be required. NMFS intends to develop rulemaking to implement the Council's recommendation for sculpins. Such rulemaking would prohibit directed fishing for sculpins, maintain recordkeeping and reporting, and establish a sculpin maximum retainable amount when directed fishing for groundfish species at 20 percent to discourage retention, while allowing flexibility to prosecute groundfish fisheries. Further details (and public comment on the sculpin action) will be available on publication of the proposed rule to reclassify sculpins as an ecosystem component species of the FMP. If the FMP amendment and its implementing regulations are approved by the Secretary of Commerce, the action is anticipated to be effective in 2021. Until effective, NMFS will continue to publish OFLs, ABCs, and TACs for sculpins in the GOA groundfish harvest specifications.

Final Rulemaking To Prohibit Directed Fishing for American Fisheries Act (AFA) and Crab Rationalization (CR) Program Sideboard Limits

On February 8, 2019, NMFS published a final rule (84 FR 2723) that modified regulations for the AFA Program and CR Program participants subject to limits on the catch of specific species (sideboard limits) in the GOA. Sideboard limits are intended to prevent participants who benefit from receiving exclusive harvesting privileges in a particular fishery from shifting effort to other fisheries. Specifically, the final rule established regulations to prohibit directed fishing for most groundfish species or species groups subject to sideboard limits under the AFA Program and CR Program, rather than prohibiting directed fishing through the annual GOA harvest specifications. Since the final rule is now effective, NMFS is no longer publishing in the annual GOA harvest specifications the AFA Program and CR Program sideboard limit amounts for groundfish species or species groups subject to the final rule. Those groundfish species subject to the final rule associated with sideboard limits are now prohibited to directed fishing in regulation (§§ 679.20(d)(1)(iv)(D) and 680.22(e)(1)(i) and (iii) and Tables 54, 55, and 56 to 50 CFR part 679). NMFS is publishing in the annual GOA harvest specifications the AFA Program and CR Program sideboard limit amounts for groundfish species or species groups that were not subject to the final rule (see Tables 18, 19, 21 and 22 of this action).

Proposed Revisions to the GOA Pollock Seasons and Pacific Cod Seasonal Allocations

In June 2019, the Council recommended for Secretarial review Amendment 109 to the FMP. Amendment 109 would revise pollock seasons and Pacific cod seasonal allocations. Amendment 109 would modify the existing annual pollock TAC allocation to two equal seasonal allocations (50 percent of TAC), rather than four equal seasonal allocations (25 percent of TAC). The pollock A and B seasons would be combined into a January 20 through May 31 A season, and the pollock C and D seasons would be combined into a September 1 through November 1 B season. Additionally, Amendment 109 would revise the Pacific cod TAC seasonal apportionments to the trawl catcher vessel (CV) sector by increasing the A season allocation and decreasing the B season allocation. Further details (and public comment on Amendment 109) will be available on publication of the proposed rule to implement Amendment 109. If Amendment 109 and its implementing regulations are approved by the Secretary of Commerce, the action is anticipated to be effective in 2021.

ABC and TAC Specifications

In December 2019, the Council's Scientific and Statistical Committee (SSC), its Advisory Panel (AP), and the Council reviewed the most recent biological and harvest information about the condition of the GOA groundfish stocks. The Council's GOA Groundfish Plan Team (Plan Team) compiled and presented this information in the 2019 SAFE report for the GOA groundfish fisheries, dated November 2019 (see

ADDRESSES). The SAFE report contains a review of the latest scientific analyses and estimates of each species' biomass and other biological parameters, as well as summaries of the available information on the GOA ecosystem and the economic condition of the groundfish fisheries off Alaska. From these data and analyses, the Plan Team recommends, and the SSC sets, an OFL and ABC for each species or species group. The 2019 SAFE report was made available for public review during the public comment period for the proposed harvest specifications.

In previous years, the greatest changes from the proposed to the final harvest specifications have been based on recent NMFS stock surveys, which provide updated estimates of stock biomass and spatial distribution, and changes to the models used for producing stock assessments. At the November 2019 Plan Team meeting, NMFS scientists presented updated and new survey results, changes to stock assessment models, and accompanying stock assessment estimates for groundfish species and species groups that are included in the 2019 SAFE report per the stock assessment schedule found in the 2019 SAFE report introduction. The SSC reviewed this information at the December 2019 Council meeting. Changes from the proposed to the final 2020 and 2021 harvest specifications are discussed below.

The final 2020 and 2021 OFLs, ABCs, and TACs are based on the best available biological and socioeconomic information, including projected biomass trends, information on assumed distribution of stock biomass, and revised methods used to calculate stock biomass. The FMP specifies the formulas, or tiers, to be used to compute OFLs and ABCs. The formulas applicable to a particular stock or stock complex are determined by the level of reliable information available to fisheries scientists. This information is categorized into a successive series of six tiers to define OFL and ABC amounts, with Tier 1 representing the highest level of information quality available and Tier 6 representing the lowest level of information quality available. The Plan Team used the FMP tier structure to calculate OFL and ABC amounts for each groundfish species. The SSC adopted the final 2020 and 2021 OFLs and ABCs recommended by the Plan Team for most groundfish species, with the exception of sablefish and Pacific cod.

For sablefish, as discussed in the proposed 2020 and 2021 harvest specifications (84 FR 66109, December 3, 2019) the SSC considered the appropriateness of continuing to specify sablefish OFLs at the separate Bering Sea, Aleutian Islands, and GOA management area levels. The SSC reviewed the information available regarding area apportionment of the OFL, and decided that the best scientific information available regarding stock structure for sablefish supports an Alaska-wide OFL specification. Therefore, based on biological considerations, the SSC recommended specification of a single Alaska-wide sablefish OFL, which includes the Bering Sea, Aleutian Islands, and the GOA. Also, the SSC agreed with the Plan Team that a substantial reduction in the 2020 and 2021 ABCs from the maximum permissible ABCs were warranted. However, the SSC revised the Plan Team's recommendation for the sablefish ABCs by revising the method and amount of the reduction of the sablefish ABCs from the maximum permissible ABCs.

For Pacific cod, the SSC accepted the Plan Team's recommendation for the 2020 Pacific cod ABC, but also decreased the 2021 ABC to equal the lower 2020 ABC. There is considerable uncertainty about future Pacific cod recruitment and potential effects of the recent marine heat wave on Pacific cod mortality. The 2020 Pacific cod assessment should provide more clarity about future trends.

The Council adopted the SSC's OFLs and ABCs and the AP's TAC recommendations, with the exception of Pacific cod TACs (further described below). The final TAC recommendations are based on the ABCs as adjusted for other biological and socioeconomic considerations, including maintaining the sum of all TACs within the required OY range of 116,000 to 800,000 mt.

The Council recommended 2020 and 2021 TACs that are equal to ABCs for pollock in the Southeast Outside (SEO) District, shallow-water flatfish in the Central GOA and the West Yakutat and SEO Districts, deep-water flatfish, rex sole, arrowtooth flounder in the Central GOA, flathead sole in the West Yakutat and SEO Districts, Pacific ocean perch, northern rockfish, shortraker rockfish, dusky rockfish, rougheye and blackspotted rockfish, demersal shelf rockfish, thornyhead rockfish, ''other rockfish,'' big skate, longnose skate, other skates, sculpins, sharks, and octopuses in the GOA. The Council recommended TACs for 2020 and 2021 that are less than the ABCs for pollock in the Western and Central GOA and the West Yakutat District, Pacific cod, shallow-water flatfish in the Western GOA, arrowtooth flounder in the Western GOA and the West Yakutat and SEO Districts, flathead sole in the Western and Central GOA, and Atka mackerel. The Council recommended 2020 sablefish TACs that are less than the 2020 ABCs, and 2021 sablefish TACs that are equal to 2021 ABCs. Setting the 2020 sablefish TACs less than 2020 ABCs is intended to provide an incremental increase to the 2020 sablefish TACs, rather than the very large increase in the 2020 sablefish TACs if they were set equal to ABCs.

The combined Western, Central, and West Yakutat pollock TAC and the GOA Pacific cod TACs are set to accommodate the State of Alaska's (State's) guideline harvest levels (GHLs) so that the ABCs for pollock and Pacific cod are not exceeded. Additionally, the Council recommended a further decrease to the Pacific cod TACs as an additional conservation measure due to this stock's low spawning biomass level (further discussed in the section titled ''Specification and Apportionment of TAC Amounts''). The Western GOA shallow-water flatfish, Western GOA arrowtooth flounder, and Western GOA flathead sole TACs are set to allow for increased harvest opportunities for these target species while conserving the halibut PSC limit for use in other, more fully utilized fisheries. Similarly, the Western Yakutat and SEO Districts arrowtooth flounder TACs and the Central GOA flathead sole TACs are set lower than ABC to conserve halibut PSC limit for use in other fisheries or because there is limited commercial interest and participation in these fisheries. The Atka mackerel TAC is set to accommodate incidental catch amounts in other fisheries.

The final 2020 and 2021 harvest specifications approved by the Secretary of Commerce are unchanged from those recommended by the Council, and are consistent with the preferred harvest strategy alternative in the EIS (see **ADDRESSES**).

NMFS finds that the Council's recommended OFLs, ABCs, and TACs are consistent with the biological condition of the groundfish stocks as described in the final 2019 SAFE report. NMFS also finds that the Council's recommendations for OFLs, ABCs, and TACs are consistent with the biological condition of groundfish stocks as adjusted for other biological and socioeconomic considerations, including maintaining the total TAC within the OY range. NMFS reviewed the Council's recommended TACs and apportionments, and NMFS approves these harvest specifications under 50 CFR 679.20(c)(3)(ii). The apportionment of TAC amounts among gear types and

sectors, processing sectors, and seasons is discussed below.

Tables 1 and 2 list the final 2020 and 2021 OFLs, ABCs, TACs, and area apportionments of groundfish in the GOA. The 2020 harvest specifications set in this final action will supersede the 2020 harvest specifications previously set in the final 2019 and 2020 harvest specifications (84 FR 9416, March 14, 2019). The 2021 harvest specifications will be superseded in early 2021 when the final 2021 and 2022 harvest specifications are published. Pursuant to this final action, the 2020 harvest specifications therefore will apply for the remainder of the current year (2020), while the 2021 harvest specifications are projected only for the following year (2021) and will be superseded in early 2021 by the final 2021 and 2022 harvest specifications. Because this final action (published in early 2020) will be superseded in early 2021 by the publication of the final 2021 and 2022 harvest specifications, it is projected that this final action will implement the harvest specifications for the Gulf of Alaska for approximately one year.

Specification and Apportionment of TAC Amounts

NMFS's apportionment of groundfish species is based on the distribution of biomass among the regulatory areas over which NMFS manages the species. Additional regulations govern the apportionment of pollock, Pacific cod, and sablefish and are described below.

The ABC for the pollock stock in the combined Western and Central Regulatory Areas and the West Yakutat (WYK) District of the Eastern Regulatory Area (the W/C/WYK) includes the amount for the GHL established by the State for the Prince William Sound (PWS) pollock fishery. The Plan Team, SSC, AP, and Council have recommended that the sum of all State water and Federal water pollock removals from the GOA not exceed ABC recommendations. For 2020 and 2021, the SSC recommended and the Council approved the W/C/WYK pollock ABC, including the amount to account for the State's PWS GHL. At the November 2019 Plan Team meeting, State fisheries managers recommended setting the PWS pollock GHL at 2.5 percent of the annual W/C/WYK pollock ABC. For 2020, this yields a PWS pollock GHL of 2,712 mt, a decrease of 684 mt from the 2019 PWS pollock GHL of 3,396 mt. For 2021, the PWS pollock GHL is 2,797 mt, a decrease of 599 mt from the 2019 PWS pollock GHL of 3,396 mt. After the GHL reductions, the 2020 and 2021 pollock ABCs for the combined W/C/WYK areas are then apportioned between four statistical areas (Areas 610, 620, 630, and 640) as both ABCs and TACs, as described below and detailed in Tables 1 and 2. The total ABCs and TACs for the four statistical areas, plus the State PWS GHL, do not exceed the combined W/C/WYK ABC.

Apportionments of pollock to the W/C/WYK areas are considered to be ''apportionments of annual catch limits (ACLs)'' rather than ''ABCs.'' This more accurately reflects that such apportionments address management, rather than biological or conservation, concerns. In addition, apportionments of the ACL in this manner allow NMFS to balance any transfer of TAC among Areas 610, 620, and 630 pursuant to § 679.20(a)(5)(iv)(B) to ensure that the combined W/C/WYK ACL, ABC, and TAC are not exceeded.

NMFS establishes pollock TACs in the Western (Area 610) and Central (Areas 620 and 630) Regulatory Areas and the West Yakutat (Area 640) and the SEO (Area 650) Districts of the GOA (see Tables 1 and 2). NMFS also establishes seasonal apportionments of the annual pollock TACs in the Western and Central Regulatory Areas of the GOA among Statistical Areas 610, 620, and 630. These apportionments are divided equally among each of the following four seasons: The A season (January 20 through March 10), the B season (March 10 through May 31), the C season (August 25 through October 1), and the D season (October 1 through November 1) (§§ 679.23(d)(2)(i) through (iv), and 679.20(a)(5)(iv)(A) and (B)). Additional detail is provided in this rule; Tables 3 and 4 list these amounts.

The 2020 and 2021 Pacific cod TACs are set to accommodate the State's GHL for Pacific cod in State waters in the Western and Central Regulatory Areas, as well as in PWS. The Plan Team, SSC, AP, and Council recommended that the sum of all State water and Federal water Pacific cod removals from the GOA not exceed ABC recommendations. The Council set the 2020 and 2021 Pacific cod TACs in the Western, Central, and Eastern Regulatory Areas to account for State GHLs. Therefore, the 2020 and 2021 Pacific cod TACs are less than the ABCs by the following amounts: (1) Western GOA, 2,866 mt; (2) Central GOA, 4,652 mt; and (3) Eastern GOA, 672 mt. These amounts reflect the State's 2020 and 2021 GHLs in these areas, which are 30 percent of the Western GOA ABC and 25 percent of the Eastern and Central GOA ABCs. For 2020, this results in a Western GOA Pacific cod GHL of 1,483 mt. This also results in a 2,115 mt GHL and 305 mt GHL in the Central GOA and Eastern GOA, respectively. The 2020 and 2021 Pacific cod TACs also incorporate an additional reduction from the Pacific cod ABCs, as the Council and NMFS have set the Pacific cod TACs at a conservative level of 60 percent of the available ABCs, after deduction of the State GHL amounts. The Council chose, and NMFS agrees, to make this additional reduction to the Pacific cod TAC because the most recent biological assessment available of the stock condition for Pacific cod in the GOA has determined that the spawning biomass will be below 20 percent of the projected unfished spawning biomass during 2020.

NMFS establishes seasonal apportionments of the annual Pacific cod TAC in the Western and Central Regulatory Areas. Sixty percent of the annual TAC is apportioned to the A season for hook-and-line, pot, and jig gear from January 1 through June 10, and for trawl gear from January 20 through June 10. Forty percent of the annual TAC is apportioned to the B season for jig gear from June 10 through December 31, for hook-and-line and pot gear from September 1 through December 31, and for trawl gear from September 1 through November 1 (§§ 679.23(d)(3) and 679.20(a)(12)). The Western and Central GOA Pacific cod TACs are allocated among various gear and operational sectors. The Pacific cod sector apportionments are discussed in detail in a subsequent section and in Tables 5 and 6 of this rule.

In accordance with § 679.20(d)(4), NMFS has determined that a biological assessment of stock condition for Pacific cod in the GOA projects that the spawning biomass in the GOA will be below 20 percent of the projected unfished spawning biomass during 2020. Consequently, NMFS prohibited directed fishing for Pacific cod in the GOA on January 1, 2020, through December 31, 2020 (84 FR 70438, December 23, 2019). While this closure is effective the maximum retainable amounts at § 679.20(e) and (f) apply at any time during a trip. Pursuant to § 679.20(d)(4), the directed fishery for Pacific cod in the GOA will remain closed until a subsequent biological assessment projects that the spawning biomass for Pacific cod in the GOA will exceed 20 percent of the projected unfished spawning biomass during a fishing year.

The Council's recommendation for sablefish area apportionments takes into account the prohibition on the use of trawl gear in the SEO District of the Eastern Regulatory Area (§ 679.7(b)(1)) and makes available 5 percent of the combined Eastern Regulatory Area

TACs to vessels using trawl gear for use as incidental catch in other trawl groundfish fisheries in the WYK District (§ 679.20(a)(4)(i)). Tables 7 and 8 list the final 2020 and 2021 allocations of sablefish TAC to fixed gear and trawl gear in the GOA.

Changes From the Proposed 2020 and 2021 Harvest Specifications in the GOA

In October 2019, the Council's recommendations for the proposed 2020 and 2021 harvest specifications (84 FR 66109, December 3, 2019) were based largely on information contained in the final 2018 SAFE report for the GOA groundfish fisheries, dated November 2018. The final 2018 SAFE report for the GOA is available from the Council (see **ADDRESSES**). The Council proposed that the final OFLs, ABCs, and TACs established for the 2020 groundfish fisheries (84 FR 9416, March 14, 2019) be used for the proposed 2020 and 2021 harvest specifications (84 FR 66109, December 3, 2019), pending completion and review of the 2019 SAFE report at the Council's December 2019 meeting.

As described previously, the SSC recommended the final 2020 and 2021 OFLs and ABCs as recommended by the Plan Team. The Council adopted as its recommendations the SSC's OFL and ABC recommendations and the AP's TAC recommendations (except for Pacific cod) for 2020 and 2021.

The final 2020 ABCs are higher than the proposed 2020 ABCs published in the proposed 2020 and 2021 harvest specifications (84 FR 66109, December 3, 2019) for pollock, sablefish, rex sole, Pacific ocean perch, northern rockfish, dusky rockfish, big skate, and octopuses. The final 2020 ABCs are lower than the proposed 2020 ABCs for Pacific cod, shallow-water flatfish, deep-water flatfish, arrowtooth flounder, flathead sole, shortraker rockfish, rougheye/blackspotted rockfish, demersal shelf rockfish, other rockfish, longnose skate, other skates, and sculpins.

The final 2021 ABCs are higher than the proposed 2021 ABCs for pollock, sablefish, shallow-water flatfish, rex sole, flathead sole, Pacific ocean perch, big skate, and octopuses. The final 2021 ABCs are lower than the proposed 2021 ABCs for Pacific cod, deep-water flatfish, arrowtooth flounder, northern rockfish, shortraker rockfish, dusky rockfish, rougheye/blackspotted rockfish, demersal shelf rockfish, other rockfish, longnose skates, other skates, and sculpins. For the remaining target species, the Council recommended the final 2020 and 2021 ABCs that are the same as the proposed 2020 and 2021 ABCs.

Additional information explaining the changes between the proposed and final ABCs is included in the final 2019 SAFE report, which was not available when the Council made its proposed ABC and TAC recommendations in October 2019. At that time, the most recent stock assessment information was contained in the final 2018 SAFE report. The final 2019 SAFE report contains the best and most recent scientific information on the condition of the groundfish stocks, as previously discussed in this preamble, and is available for review (see **ADDRESSES**). The Council considered the 2019 SAFE report in December 2019 when it made recommendations for the final 2020 and 2021 harvest specifications. In the GOA, the total final 2020 TAC amount is 399,239 mt, a decrease of 2 percent from the total proposed 2020 TAC amount of 408,534 mt. The total final 2021 TAC amount is 407,982 mt, a decrease of 0.1 percent from the total proposed 2021 TAC amount of 408,534 mt. Table 1a summarizes the difference between the proposed and final TACs.

Annual stock assessments incorporate a variety of new or revised inputs, such as survey data or catch information, as well as changes to the statistical models used to estimate a species' biomass and population trend. Changes to biomass and ABC estimates are primarily based on fishery catch updates to species' assessment models. Some species, such as pollock and sablefish, have additional surveys conducted on an annual basis, which resulted in additional data being available for the 2019 assessments for these stocks.

The changes from the proposed 2020 TACs to the final 2020 TACs are within a range of plus 13 percent or minus 59 percent, and the changes from the proposed 2021 TACs to the final 2021 TACs are within a range of plus 44 percent or minus 59 percent. Based on changes in the estimates of overall biomass in the stock assessment for 2020 and 2021, as compared to the estimates previously made for 2019 and 2020, the species or species group with the greatest TAC percentage increases are sablefish (in 2021), Pacific ocean perch, and big skate. Based on changes in the estimates of biomass, the species or species group with the greatest decreases in TACs are Pacific cod, deep-water flatfish, shortraker rockfish, rougheye/blackspotted rockfish, other rockfish, longnose skates, and other skates. For all other species and species groups, changes from the proposed 2020 TACs to the final 2020 TACs and changes from the proposed 2021 TACs to the final 2021 TACs are less than a 10 percent change (either increase or decrease). These TAC changes correspond to associated changes in the ABCs and TACs, as recommended by the SSC, AP, and Council.

Detailed information providing the basis for the changes described above is contained in the final 2019 SAFE report. The final TACs are based on the best scientific information available, including biological and socioeconomic information. These TACs are specified in compliance with the harvest strategy described in the proposed and final rules for the 2020 and 2021 harvest specifications.

TABLE 1A—COMPARISON OF PROPOSED AND FINAL 2020 AND 2021 GOA TOTAL ALLOWABLE CATCH LIMITS

[Values are rounded to the nearest metric ton and percentage]

Species	2020 and 2021 proposed TAC	2020 final TAC	2020 final minus 2020 proposed TAC	Percentage difference	2021 final TAC	2021 final minus 2021 proposed TAC	Percentage difference
Pollock	114,943	115,930	987	1	119,239	4,296	4
Pacific cod	15,709	6,431	−9,278	−59	6,431	−9,278	−59
Sablefish	15,462	14,393	−1,069	−7	22,252	6,790	44
Shallow-water flatfish	43,606	44,864	1,258	3	45,403	1,797	4
Deep-water flatfish	9,624	6,030	−3,594	−37	5,926	−3,698	−38
Rex sole	14,725	14,878	153	1	15,416	691	5
Arrowtooth flounder	96,875	96,969	94	0	94,983	−1,892	−2
Flathead sole	26,587	28,262	1,675	6	28,386	1,799	7
Pacific ocean perch	27,652	31,238	3,586	13	29,983	2,331	8
Northern rockfish	4,269	4,311	42	1	4,106	−163	−4
Shortraker rockfish	863	708	−155	−18	708	−155	−18
Dusky rockfish	3,670	3,676	6	0	3,598	−72	−2

TABLE 1A—COMPARISON OF PROPOSED AND FINAL 2020 AND 2021 GOA TOTAL ALLOWABLE CATCH LIMITS—Continued

[Values are rounded to the nearest metric ton and percentage]

Species	2020 and 2021 proposed TAC	2020 final TAC	2020 final minus 2020 proposed TAC	Percentage difference	2021 final TAC	2021 final minus 2021 proposed TAC	Percentage difference
Rougheye/blackspotted rockfish	1,414	1,209	−205	−14	1,211	−203	−14
Demersal shelf rockfish	261	238	−23	−9	238	−23	−9
Thornyhead rockfish	2,016	2,016	0	0	2,016	0	0
Other rockfish	5,594	4,053	−1,541	−28	4,053	−1,541	−28
Atka mackerel	3,000	3,000	0	0	3,000	0	0
Big skate	2,848	3,208	360	13	3,208	360	13
Longnose skate	3,572	2,587	−985	−28	2,587	−985	−28
Other skates	1,384	875	−509	−37	875	−509	−37
Sculpins	5,301	5,199	−102	−2	5,199	−102	−2
Sharks	8,184	8,184	0	0	8,184	0	0
Octopuses	975	980	5	1	980	5	1
Total	408,534	399,239	−9,295	−2	407,982	−552	−0.1

The final 2020 and 2021 TAC amounts for the GOA are within the OY range established for the GOA and do not exceed the ABC for any species or species group. Tables 1 and 2 list the final OFL, ABC, and TAC amounts for GOA groundfish for 2020 and 2021, respectively.

TABLE 1—FINAL 2020 OFLS, ABCS, AND TACS OF GROUNDFISH FOR THE WESTERN/CENTRAL/WEST YAKUTAT, WESTERN, CENTRAL, EASTERN REGULATORY AREAS, THE WEST YAKUTAT AND SOUTHEAST OUTSIDE DISTRICTS OF THE EASTERN REGULATORY AREA, AND GULFWIDE DISTRICTS OF THE GULF OF ALASKA

[Values are rounded to the nearest metric ton]

Species	Area [1]	OFL	ABC	TAC
Pollock [2]	Shumagin (610)	n/a	19,175	19,175
	Chirikof (620)	n/a	54,456	54,456
	Kodiak (630)	n/a	26,597	26,597
	WYK (640)	n/a	5,554	5,554
	W/C/WYK (subtotal) [2]	140,674	108,494	105,782
	SEO (650)	13,531	10,148	10,148
	Total	154,205	118,642	115,930
Pacific cod [3]	W	n/a	4,942	2,076
	C	n/a	8,458	3,806
	E	n/a	1,221	549
	Total	17,794	14,621	6,431
Sablefish [4]	W	n/a	2,278	1,942
	C	n/a	7,560	6,445
	WYK	n/a	2,521	2,343
	SEO	n/a	4,524	3,663
	E (WYK and SEO) (subtotal)	n/a	7,045	6,006
	Total	50,481	16,883	14,393
Shallow-water flatfish [5]	W	n/a	23,849	13,250
	C	n/a	27,732	27,732
	WYK	n/a	2,773	2,773
	SEO	n/a	1,109	1,109
	Total	68,010	55,463	44,864
Deep-water flatfish [6]	W	n/a	226	226
	C	n/a	1,948	1,948
	WYK	n/a	2,105	2,105
	SEO	n/a	1,751	1,751
	Total	7,163	6,030	6,030
Rex sole	W	n/a	2,901	2,901
	C	n/a	8,579	8,579
	WYK	n/a	1,174	1,174
	SEO	n/a	2,224	2,224
	Total	18,127	14,878	14,878
Arrowtooth flounder	W	n/a	31,455	14,500
	C	n/a	68,669	68,669
	WYK	n/a	10,242	6,900
	SEO	.....	17,694	6,900

TABLE 1—FINAL 2020 OFLS, ABCS, AND TACS OF GROUNDFISH FOR THE WESTERN/CENTRAL/WEST YAKUTAT, WESTERN, CENTRAL, EASTERN REGULATORY AREAS, THE WEST YAKUTAT AND SOUTHEAST OUTSIDE DISTRICTS OF THE EASTERN REGULATORY AREA, AND GULFWIDE DISTRICTS OF THE GULF OF ALASKA—Continued

[Values are rounded to the nearest metric ton]

Species	Area [1]	OFL	ABC	TAC
	Total	153,017	128,060	96,969
Flathead sole	W	n/a	13,783	8,650
	C	n/a	20,201	15,400
	WYK	n/a	2,354	2,354
	SEO	n/a	1,858	1,858
	Total	46,572	38,196	28,262
Pacific ocean perch [7]	W	n/a	1,437	1,437
	C	n/a	23,678	23,678
	WYK	n/a	1,470	1,470
	W/C/WYK subtotal	31,567	26,585	26,585
	SEO	5,525	4,653	4,653
	Total	37,092	31,238	31,238
Northern rockfish [8]	W	n/a	1,133	1,133
	C	n/a	3,178	3,178
	E	n/a	1	.....
	Total	5,143	4,312	4,311
Shortraker rockfish [9]	W	n/a	52	52
	C	n/a	284	284
	E	n/a	372	372
	Total	944	708	708
Dusky rockfish [10]	W	n/a	776	776
	C	n/a	2,746	2,746
	WYK	n/a	115	115
	SEO	n/a	39	39
	Total	4,492	3,676	3,676
Rougheye and Blackspotted rockfish [11]	W	n/a	168	168
	C	n/a	455	455
	E	n/a	586	586
	Total	1,452	1,209	1,209
Demersal shelf rockfish [12]	SEO	375	238	238
Thornyhead rockfish	W	n/a	326	326
	C	n/a	911	911
	E	n/a	779	779
	Total	2,688	2,016	2,016
Other rockfish [13 14]	W and C	n/a	940	940
	WYK	n/a	369	369
	SEO	n/a	2,744	2,744
	Total	5,320	4,053	4,053
Atka mackerel	GW	6,200	4,700	3,000
Big skate [15]	W	n/a	758	758
	C	n/a	1,560	1,560
	E	n/a	890	890
	Total	4,278	3,208	3,208
Longnose skate [16]	W	n/a	158	158
	C	n/a	1,875	1,875
	E	n/a	554	554
	Total	3,449	2,587	2,587
Other skates [17]	GW	1,166	875	875
Sculpins	GW	6,932	5,199	5,199
Sharks	GW	10,913	8,184	8,184
Octopus	GW	1,307	980	980
Total		607,120	465,956	399,239

[1] Regulatory areas and districts are defined at § 679.2. (W = Western Gulf of Alaska; C = Central Gulf of Alaska; E = Eastern Gulf of Alaska; WYK = West Yakutat District; SEO = Southeast Outside District; GW = Gulf-wide).

[2] The total for the W/C/WYK Regulatory Areas pollock ABC is 108,494 mt. After deducting 2.5 percent (2,712 mt) of that ABC for the State's pollock GHL fishery, the remaining pollock ABC of 105,782 mt (for the W/C/WYK Regulatory Areas) is apportioned among four statistical areas (Areas 610, 620, 630, and 640). These apportionments are considered subarea ACLs, rather than ABCs, for specification and reapportionment purposes. The ACLs in Areas 610, 620, and 630 are further divided by season, as detailed in Table 3 (final 2020 seasonal biomass distribution of pollock in the Western and Central Regulatory Areas, area apportionments, and seasonal allowances). In the West Yakutat (Area 640) and Southeast Outside (Area 650) Districts of the Eastern Regulatory Area, pollock is not divided into seasonal allowances.

[3] The annual Pacific cod TAC is apportioned 60 percent to the A season and 40 percent to the B season in the Western and Central Regulatory Areas of the GOA. Pacific cod TAC in the Eastern Regulatory Area of the GOA is allocated 90 percent to vessels harvesting Pacific cod for processing by the inshore component and 10 percent to vessels harvesting Pacific cod for processing by the offshore component. Table 5 lists the final 2020 Pacific cod seasonal apportionments and sector allocations.

[4] The sablefish OFL is set Alaska-wide. Additionally, sablefish is allocated to trawl and fixed gear in 2020 and trawl gear in 2021. Table 7 lists the final 2020 allocations of sablefish TACs.

[5] "Shallow-water flatfish" means flatfish not including "deep-water flatfish," flathead sole, rex sole, or arrowtooth flounder.

[6] "Deep-water flatfish" means Dover sole, Greenland turbot, Kamchatka flounder, and deepsea sole.

[7] "Pacific ocean perch" means *Sebastes alutus.*

[8] "Northern rockfish" means *Sebastes polyspinis.* For management purposes, the 1 mt apportionment of ABC to the WYK District of the Eastern Gulf of Alaska has been included in the "other rockfish" species group.

[9] "Shortraker rockfish" means *Sebastes borealis.*

[10] "Dusky rockfish" means *Sebastes variabilis.*

[11] "Rougheye and blackspotted rockfish" means *Sebastes aleutianus* (rougheye) and *Sebastes melanostictus* (blackspotted).

[12] "Demersal shelf rockfish" means *Sebastes pinniger* (canary), *S. nebulosus* (china), *S. caurinus* (copper), *S. maliger* (quillback), *S. helvomaculatus* (rosethorn), *S. nigrocinctus* (tiger), and *S. ruberrimus* (yelloweye).

[13] "Other rockfish" means *Sebastes aurora* (aurora), *S. melanostomus* (blackgill), *S. paucispinis* (bocaccio), *S. goodei* (chilipepper), *S. crameri* (darkblotch), *S. elongatus* (greenstriped), *S. variegatus* (harlequin), *S. wilsoni* (pygmy), *S. babcocki* (redbanded), *S. proriger* (redstripe), *S. zacentrus* (sharpchin), *S. jordani* (shortbelly), *S. brevispinis* (silvergrey), *S. diploproa* (splitnose), *S. saxicola* (stripetail), *S. miniatus* (vermilion), *S. reedi* (yellowmouth), *S. entomelas* (widow), and *S. flavidus* (yellowtail). In the Eastern GOA only, other rockfish also includes northern rockfish, *S. polyspinis.*

[14] "Other rockfish" in the Western and Central Regulatory Areas and in the West Yakutat District means other rockfish and demersal shelf rockfish. The "other rockfish" species group in the SEO District only includes other rockfish.

[15] "Big skate" means *Raja binoculata.*

[16] "Longnose skate" means *Raja rhina.*

[17] "Other skates" means *Bathyraja and Raja* spp.

TABLE 2—FINAL 2021 OFLS, ABCS, AND TACS OF GROUNDFISH FOR THE WESTERN/CENTRAL/WEST YAKUTAT, WESTERN, CENTRAL, EASTERN REGULATORY AREAS, THE WEST YAKUTAT AND SOUTHEAST OUTSIDE DISTRICTS OF THE EASTERN REGULATORY AREA, AND GULFWIDE DISTRICTS OF THE GULF OF ALASKA

[Values are rounded to the nearest metric ton]

Species	Area [1]	OFL	ABC	TAC
Pollock [2]	Shumagin (610)	n/a	19,775	19,775
	Chirikof (620)	n/a	56,159	56,159
	Kodiak (630)	n/a	27,429	27,429
	WYK (640)	n/a	5,728	5,728
	W/C/WYK (subtotal) [2]	149,988	111,888	109,091
	SEO (650)	13,531	10,148	10,148
	Total	163,519	122,036	119,239
Pacific cod [3]	W	n/a	4,942	2,076
	C	n/a	8,458	3,806
	E	n/a	1,221	549
	Total	30,099	14,621	6,431
Sablefish [4]	W	n/a	3,003	3,003
	C	n/a	9,963	9,963
	WYK	n/a	3,323	3,323
	SEO	n/a	5,963	5,963
	E (WYK and SEO) (subtotal)	n/a	9,286	9,286
	Total	64,765	22,252	22,252
Shallow-water flatfish [5]	W	n/a	24,256	13,250
	C	n/a	28,205	28,205
	WYK	n/a	2,820	2,820
	SEO	n/a	1,128	1,128
	Total	69,129	56,409	45,403
Deep-water flatfish [6]	W	n/a	225	225
	C	n/a	1,914	1,914
	WYK	n/a	2,068	2,068
	SEO	n/a	1,719	1,719
	Total	7,040	5,926	5,926
Rex sole	W	n/a	3,013	3,013
	C	n/a	8,912	8,912
	WYK	n/a	1,206	1,206
	SEO	n/a	2,285	2,285
	Total	18,779	15,416	15,416
Arrowtooth flounder	W	n/a	30,545	14,500

TABLE 2—FINAL 2021 OFLS, ABCS, AND TACS OF GROUNDFISH FOR THE WESTERN/CENTRAL/WEST YAKUTAT, WESTERN, CENTRAL, EASTERN REGULATORY AREAS, THE WEST YAKUTAT AND SOUTHEAST OUTSIDE DISTRICTS OF THE EASTERN REGULATORY AREA, AND GULFWIDE DISTRICTS OF THE GULF OF ALASKA—Continued

[Values are rounded to the nearest metric ton]

Species	Area [1]	OFL	ABC	TAC
	C	n/a	66,683	66,683
	WYK	n/a	9,946	6,900
	SEO	n/a	17,183	6,900
	Total	148,597	124,357	94,983
Flathead sole	W	n/a	14,191	8,650
	C	n/a	20,799	15,400
	WYK	n/a	2,424	2,424
	SEO	n/a	1,912	1,912
	Total	47,919	39,326	28,386
Pacific ocean perch [7]	W	n/a	1,379	1,379
	C	n/a	22,727	22,727
	WYK	n/a	1,410	1,410
	W/C/WYK	30,297	25,516	25,516
	SEO	5,303	4,467	4,467
	Total	35,600	29,983	29,983
Northern rockfish [8]	W	n/a	1,079	1,079
	C	n/a	3,027	3,027
	E	n/a	1	.....
	Total	4,898	4,107	4,106
Shortraker rockfish [9]	W	n/a	52	52
	C	n/a	284	284
	E	n/a	372	372
	Total	944	708	708
Dusky rockfish [10]	W	n/a	759	759
	C	n/a	2,688	2,688
	WYK	n/a	113	113
	SEO	n/a	38	38
	Total	4,396	3,598	3,598
Rougheye and Blackspotted rockfish [11]	W	n/a	169	169
	C	n/a	455	455
	E	n/a	587	587
	Total	1,455	1,211	1,211
Demersal shelf rockfish [12]	SEO	375	238	238
Thornyhead rockfish	W	n/a	326	326
	C	n/a	911	911
	E	n/a	779	779
	Total	2,688	2,016	2,016
	W and C	n/a	940	940
Other rockfish [13] [14]	WYK	n/a	369	369
	SEO	n/a	2,744	2,744
	Total	5,320	4,053	4,053
Atka mackerel	GW	6,200	4,700	3,000
Big skate [15]	W	n/a	758	758
	C	n/a	1,560	1,560
	E	n/a	890	890
	Total	4,278	3,208	3,208
Longnose skate [16]	W	n/a	158	158
	C	n/a	1,875	1,875
	E	n/a	554	554
	Total	3,449	2,587	2,587
Other skates [17]	GW	1,166	875	875
Sculpins	GW	6,932	5,199	5,199
Sharks	GW	10,913	8,184	8,184
Octopus	GW	1,307	980	980
Total		639,768	471,990	407,982

[1] Regulatory areas and districts are defined at § 679.2. (W = Western Gulf of Alaska; C = Central Gulf of Alaska; E = Eastern Gulf of Alaska; WYK = West Yakutat District; SEO = Southeast Outside District; GW = Gulf-wide).

[2] The total for the W/C/WYK Regulatory Areas pollock ABC is 111,888 mt. After deducting 2.5 percent (2,797 mt) of that ABC for the State's pollock GHL fishery, the remaining pollock ABC of 109,091 mt (for the W/C/WYK Regulatory Areas) is apportioned among four statistical areas (Areas 610, 620, 630, and 640). These apportionments are considered subarea ACLs, rather than ABCs, for specification and reapportionment purposes. The ACLs in Areas 610, 620, and 630 are further divided by season, as detailed in Table 4 (final 2021 seasonal biomass distribution of pollock in the Western and Central Regulatory Areas, area apportionments, and seasonal allowances). In the West Yakutat (Area 640) and Southeast Outside (Area 650) Districts of the Eastern Regulatory Area, pollock is not divided into seasonal allowances.

[3] The annual Pacific cod TAC is apportioned 60 percent to the A season and 40 percent to the B season in the Western and Central Regulatory Areas of the GOA. Pacific cod TAC in the Eastern Regulatory Area of the GOA is allocated 90 percent to vessels harvesting Pacific cod for processing by the inshore component and 10 percent to vessels harvesting Pacific cod for processing by the offshore component. Table 6 lists the final 2021 Pacific cod seasonal apportionments and sector allocations.

[4] The sablefish OFL is set Alaska-wide. Additionally, sablefish is only allocated to trawl gear for 2021. Table 8 lists the final 2021 allocation of sablefish TACs to trawl gear.

[5] "Shallow-water flatfish" means flatfish not including "deep-water flatfish," flathead sole, rex sole, or arrowtooth flounder.

[6] "Deep-water flatfish" means Dover sole, Greenland turbot, Kamchatka flounder, and deepsea sole.

[7] "Pacific ocean perch" means *Sebastes alutus.*

[8] "Northern rockfish" means *Sebastes polyspinis.* For management purposes, the 1 mt apportionment of ABC to the WYK District of the Eastern Gulf of Alaska has been included in the "other rockfish" species group.

[9] "Shortraker rockfish" means *Sebastes borealis.*

[10] "Dusky rockfish" means *Sebastes variabilis.*

[11] "Rougheye and blackspotted rockfish" means *Sebastes aleutianus* (rougheye) and *Sebastes melanostictus* (blackspotted).

[12] "Demersal shelf rockfish" means *Sebastes pinniger* (canary), *S. nebulosus* (china), *S. caurinus* (copper), *S. maliger* (quillback), *S. helvomaculatus* (rosethorn), *S. nigrocinctus* (tiger), and *S. ruberrimus* (yelloweye).

[13] "Other rockfish" means *Sebastes aurora* (aurora), *S. melanostomus* (blackgill), *S. paucispinis* (bocaccio), *S. goodei* (chilipepper), *S. crameri* (darkblotch), *S. elongatus* (greenstriped), *S. variegatus* (harlequin), *S. wilsoni* (pygmy), *S. babcocki* (redbanded), *S. proriger* (redstripe), *S. zacentrus* (sharpchin), *S. jordani* (shortbelly), *S. brevispinis* (silvergrey), *S. diploproa* (splitnose), *S. saxicola* (stripetail), *S. miniatus* (vermilion), *S. reedi* (yellowmouth), *S. entomelas* (widow), and *S. flavidus* (yellowtail). In the Eastern GOA only, other rockfish also includes northern rockfish, *S. polyspinis.*

[14] "Other rockfish" in the Western and Central Regulatory Areas and in the West Yakutat District means other rockfish and demersal shelf rockfish. The "other rockfish" species group in the SEO District only includes other rockfish.

[15] "Big skate" means *Raja binoculata.*

[16] "Longnose skate" means *Raja rhina.*

[17] "Other skates" means *Bathyraja and Raja* spp.

Apportionment of Reserves

Section 679.20(b)(2) requires NMFS to set aside 20 percent of each TAC for pollock, Pacific cod, flatfish, sculpins, sharks, and octopuses in reserve for possible apportionment at a later date during the fishing year. For 2020 and 2021, NMFS proposed reapportionment of all the reserves in the proposed 2020 and 2021 harvest specifications published in the **Federal Register** on December 3, 2019 (84 FR 66109). NMFS did not receive any public comments on the proposed reapportionments. For the final 2020 and 2021 harvest specifications, NMFS reapportioned, as proposed, all the reserves for pollock, Pacific cod, flatfish, sculpins, sharks, and octopuses back to the original TAC limit from which the reserve was derived (§ 679.20(b)(3)). This was done because NMFS expects, based on recent harvest patterns, that such reserves are not necessary and that the entire TAC for each of these species will be caught. The TACs listed in Tables 1 and 2 reflect reapportionments of reserve amounts to the original TAC limit for these species and species groups, *i.e.,* each final TAC for the above mentioned species or species groups contains the full TAC recommended by the Council.

Apportionments of Pollock TAC Among Seasons and Regulatory Areas, and Allocations for Processing by Inshore and Offshore Components

In the GOA, pollock is apportioned by season and area, and is further allocated for processing by inshore and offshore components. Pursuant to § 679.20(a)(5)(iv)(B), the annual pollock TAC specified for the Western and Central Regulatory Areas of the GOA is apportioned into four equal seasonal allowances of 25 percent. As established by § 679.23(d)(2)(i) through (iv), the A, B, C, and D season allowances are available from January 20 to March 10, March 10 to May 31, August 25 to October 1, and October 1 to November 1, respectively.

Pollock TACs in the Western and Central Regulatory Areas of the GOA are apportioned among Statistical Areas 610, 620, and 630 in proportion to the distribution of the pollock biomass, pursuant to § 679.20(a)(5)(iv)(A). In the A and B seasons, the apportionments previously were in proportion to the distribution of pollock biomass based on the four most recent NMFS winter surveys. In the C and D seasons, the apportionments were in proportion to the distribution of pollock biomass based on the four most recent NMFS summer surveys. For 2020 and 2021, the Council recommended, and NMFS approved, following the apportionment methodology that was used previously for the 2019 and 2020 harvest specifications. This methodology averages the winter and summer distribution of pollock in the Central Regulatory Area for the A season instead of using the distribution based on only the winter surveys. The average is intended to reflect the best available information about migration patterns, distribution of pollock, and the performance of the fishery in the area during the A season for the 2020 and 2021 fishing years. For the A season, the apportionment is based on an adjusted estimate of the relative distribution of pollock biomass of approximately 2 percent, 75 percent, and 23 percent in Statistical Areas 610, 620, and 630, respectively. For the B season, the apportionment is based on the relative distribution of pollock biomass of approximately 2 percent, 89 percent, and 9 percent in Statistical Areas 610, 620, and 630, respectively. For the C and D seasons, the apportionment is based on the relative distribution of pollock biomass of approximately 36 percent, 27 percent, and 37 percent in Statistical Areas 610, 620, and 630, respectively. The pollock chapter of the 2019 SAFE report (see **ADDRESSES**) contains a comprehensive description of the apportionment process and reasons for the minor changes from past apportionments.

Within any fishing year, the amount by which a pollock seasonal allowance is underharvested or overharvested may be added to, or subtracted from, subsequent seasonal allowances for the Western and Central Regulatory Areas in a manner to be determined by the Regional Administrator (§ 679.20(a)(5)(iv)(B)). The rollover amount is limited to 20 percent of the subsequent seasonal TAC apportionment for the statistical area. Any unharvested pollock above the 20-percent limit could be further distributed to the other statistical areas, in proportion to the estimated biomass in the subsequent season in those statistical areas and in an amount no

more than 20 percent of the seasonal TAC apportionment in those statistical areas (§ 679.20(a)(5)(iv)(B)). The pollock TACs in the WYK and the SEO Districts of 5,554 mt and 10,148 mt, respectively, in 2020, and 5,728 mt and 10,148 mt, respectively, in 2021, are not allocated by season.

Tables 3 and 4 list the final 2020 and 2021 seasonal biomass distribution of pollock in the Western and Central Regulatory Areas, area apportionments, and seasonal allowances. The amounts of pollock for processing by the inshore and offshore components are not shown. Section 679.20(a)(6)(i) requires the allocation of 100 percent of the pollock TAC in all GOA regulatory areas and all seasonal allowances to vessels catching pollock for processing by the inshore component after subtraction of pollock amounts projected by the Regional Administrator to be caught by, or delivered to, the offshore component incidental to directed fishing for other groundfish species. Thus, the amount of pollock available for harvest by vessels harvesting pollock for processing by the offshore component is that amount that will be taken as incidental catch during directed fishing for groundfish species other than pollock, up to the maximum retainable amounts allowed by § 679.20(e) and (f). At this time, these incidental catch amounts of pollock are unknown and will be determined during the fishing year during the course of fishing activities by the offshore component.

TABLE 3—FINAL 2020 DISTRIBUTION OF POLLOCK IN THE WESTERN AND CENTRAL REGULATORY AREAS OF THE GULF OF ALASKA; SEASONAL BIOMASS DISTRIBUTION; AREA APPORTIONMENTS; AND SEASONAL ALLOWANCES OF ANNUAL TAC

[Values are rounded to the nearest metric ton and percentages are rounded to the nearest 0.01]

Season [1]	Shumagin (Area 610)		Chirikof (Area 620)		Kodiak (Area 630)		Total [2]
A (Jan 20–Mar 10)	517	2.06%	18,757	74.86%	5,783	23.08%	25,057
B (Mar 10–May 31)	517	2.06	22,222	88.68	2,318	9.25	25,057
C (Aug 25–Oct 1)	9,070	36.20	6,739	26.89	9,248	36.91	25,057
D (Oct 1–Nov 1)	9,070	36.20	6,739	26.89	9,248	36.91	25,057
Annual Total	19,175		54,456		26,597		100,228

[1] As established by § 679.23(d)(2)(i) through (iv), the A, B, C, and D season allowances are available from January 20 to March 10, March 10 to May 31, August 25 to October 1, and October 1 to November 1, respectively. The amounts of pollock for processing by the inshore and offshore components are not shown in this table.

[2] The WYK District and SEO District pollock TACs are not allocated by season and are not included in the total pollock TACs shown in this table.

TABLE 4—FINAL 2021 DISTRIBUTION OF POLLOCK IN THE WESTERN AND CENTRAL REGULATORY AREAS OF THE GULF OF ALASKA; SEASONAL BIOMASS DISTRIBUTION; AREA APPORTIONMENTS; AND SEASONAL ALLOWANCES OF ANNUAL TAC

[Values are rounded to the nearest metric ton and percentages are rounded to the nearest 0.01]

Season [1]	Shumagin (Area 610)		Chirikof (Area 620)		Kodiak (Area 630)		Total [2]
A (Jan 20–Mar 10)	533	2.06%	19,344	74.86%	5,964	23.08%	25,841
B (Mar 10–May 31)	533	2.06	22,917	88.68	2,391	9.25	25,841
C (Aug 25–Oct 1)	9,354	36.20	6,950	26.89	9,537	36.91	25,841
D (Oct 1–Nov 1)	9,354	36.20	6,950	26.89	9,537	36.91	25,841
Annual Total	19,775		56,159		27,429		103,363

[1] As established by § 679.23(d)(2)(i) through (iv), the A, B, C, and D season allowances are available from January 20 to March 10, March 10 to May 31, August 25 to October 1, and October 1 to November 1, respectively. The amounts of pollock for processing by the inshore and offshore components are not shown in this table.

[2] The WYK District and SEO District pollock TACs are not allocated by season and are not included in the total pollock TACs shown in this table.

Annual and Seasonal Apportionments of Pacific Cod TAC

Pursuant to § 679.20(a)(12)(i), NMFS seasonally allocates the 2020 and 2021 Pacific cod TACs in the Western and Central Regulatory Areas of the GOA among gear and operational sectors. NMFS also allocates the Pacific cod TACs annually between the inshore (90 percent) and offshore (10 percent) components in the Eastern Regulatory Area of the GOA (§ 679.20(a)(6)(ii)). In the Central GOA, the Pacific cod TAC is apportioned seasonally first to vessels using jig gear, and then among CVs less than 50 feet in length overall using hook-and-line gear, CVs equal to or greater than 50 feet in length overall using hook-and-line gear, catcher/processors (C/Ps) using hook-and-line gear, CVs using trawl gear, C/Ps using trawl gear, and vessels using pot gear (§ 679.20(a)(12)(i)(B)). In the Western GOA, the Pacific cod TAC is apportioned seasonally first to vessels using jig gear, and then among CVs using hook-and-line gear, C/Ps using hook-and-line gear, CVs using trawl gear, C/Ps using trawl gear, and vessels using pot gear (§ 679.20(a)(12)(i)(A)). The overall seasonal apportionments in the Western and Central GOA are 60 percent of the annual TAC to the A season and 40 percent of the annual TAC to the B season.

Under § 679.20(a)(12)(ii), any overage or underage of the Pacific cod allowance from the A season may be subtracted from, or added to, the subsequent B season allowance. In addition, any portion of the hook-and-line, trawl, pot, or jig sector allocations that is determined by NMFS as likely to go unharvested by a sector may be reallocated to other sectors for harvest during the remainder of the fishery year.

Pursuant to § 679.20(a)(12)(i)(A) and (B), a portion of the annual Pacific cod TACs in the Western and Central GOA will be allocated to vessels with a

Federal fisheries permit that use jig gear before the TACs are apportioned among other non-jig sectors. In accordance with the FMP, the annual jig sector allocations may increase to up to 6 percent of the annual Western and Central GOA Pacific cod TACs, depending on the annual performance of the jig sector (see Table 1 of Amendment 83 to the FMP for a detailed discussion of the jig sector allocation process (76 FR 74670, December 1, 2011)). Jig sector allocation increases are established for a minimum of two years.

NMFS has evaluated the 2019 harvest performance of the jig sector in the Western and Central GOA, and is establishing the 2020 and 2021 Pacific cod apportionments to this sector based on its historical harvest performance from 2014 to 2019. For 2020 and 2021, NMFS allocates the jig sector 3.5 percent of the annual Pacific cod TAC in the Western GOA. This is an increase from the 2019 jig sector allocation of 2.5 percent. The 2020 and 2021 allocations consist of a base allocation of 2.5 percent of the Western GOA Pacific cod TAC, and a 1.0 percent performance increase because in 2019 the jig sector harvested greater than 90 percent of its 2019 Pacific cod allocation.

For 2020 and 2021, NMFS allocates the jig sector 1.0 percent of the annual Pacific cod TAC in the Central GOA. This is the same percent as the 2019 jig sector allocation because in 2019 this sector harvested less than 90 percent of its 2019 Pacific cod allocation. The 2020 and 2021 allocations consist of a base allocation of 1.0 percent of the Central GOA Pacific cod TAC, and no additional performance increase in the Central GOA.

Tables 5 and 6 list the seasonal apportionments and allocations of the 2020 and 2021 Pacific cod TACs.

TABLE 5—FINAL 2020 SEASONAL APPORTIONMENTS AND ALLOCATION OF PACIFIC COD TOTAL ALLOWABLE CATCH (TAC) AMOUNTS IN THE GOA; ALLOCATIONS IN THE WESTERN GOA AND CENTRAL GOA SECTORS, AND THE EASTERN GOA INSHORE AND OFFSHORE PROCESSING COMPONENTS

[Values are rounded to the nearest metric ton]

Regulatory area and sector [1]	Annual allocation (mt)	A Season		B Season	
		Sector percentage of annual non-jig TAC	Seasonal allowances (mt)	Sector percentage of annual non-jig TAC	Seasonal allowances (mt)
Western GOA:					
Jig (3.5% of TAC)	73	N/A	44	N/A	29
Hook-and-line CV	28	0.70	14	0.70	14
Hook-and-line C/P	397	10.90	218	8.90	178
Trawl CV	769	27.70	555	10.70	214
Trawl C/P	48	0.90	18	1.50	30
All Pot CV and Pot C/P	761	19.80	397	18.20	365
Total	2,076	60.00	1,246	40.00	830
Central GOA:					
Jig (1.0% of TAC)	38	N/A	23	N/A	15
Hook-and-line <50 CV	550	9.32	351	5.29	199
Hook-and-line ≥50 CV	253	5.61	211	1.10	41
Hook-and-line C/P	192	4.11	155	1.00	38
Trawl CV [2]	1,567	21.14	796	20.45	771
Trawl C/P	158	2.00	75	2.19	83
All Pot CV and Pot C/P	1,048	17.83	672	9.97	376
Total	3,806	60.00	2,284	40.00	1,522
Eastern GOA:		Inshore (90% of Annual TAC)		Offshore (10% of Annual TAC)	
	549		494		55

[1] NMFS prohibited directed fishing for Pacific cod in the GOA on January 1, 2020, through December 31, 2020 (84 FR 70438, December 23, 2019), therefore; the seasonal apportionments and allocations in Table 5 are to support incidental catch of Pacific cod in other fisheries. While the directed fishing closure is effective, the maximum retainable amounts at § 679.20(e) and (f) apply at any time during a trip.

[2] Trawl catcher vessels participating in Rockfish Program cooperatives receive 3.81 percent, or 145 mt, of the annual Central GOA TAC (see Table 28c to 50 CFR part 679), which is deducted from the Trawl CV B season allowance (see Table 12. Final 2020 Apportionments of Rockfish Secondary Species in the Central GOA and Table 28c to 50 CFR part 679).

TABLE 6—FINAL 2021 SEASONAL APPORTIONMENTS AND ALLOCATION OF PACIFIC COD TOTAL ALLOWABLE CATCH (TAC) AMOUNTS IN THE GOA; ALLOCATIONS IN THE WESTERN GOA AND CENTRAL GOA SECTORS, AND THE EASTERN GOA INSHORE AND OFFSHORE PROCESSING COMPONENTS

[Values are rounded to the nearest metric ton]

Regulatory area and sector	Annual allocation (mt)	A Season		B Season	
		Sector percentage of annual non-jig TAC	Seasonal allowances (mt)	Sector percentage of annual non-jig TAC	Seasonal allowances (mt)
Western GOA:					

TABLE 6—FINAL 2021 SEASONAL APPORTIONMENTS AND ALLOCATION OF PACIFIC COD TOTAL ALLOWABLE CATCH (TAC) AMOUNTS IN THE GOA; ALLOCATIONS IN THE WESTERN GOA AND CENTRAL GOA SECTORS, AND THE EASTERN GOA INSHORE AND OFFSHORE PROCESSING COMPONENTS—Continued

[Values are rounded to the nearest metric ton]

Regulatory area and sector	Annual allocation (mt)	A Season		B Season	
		Sector percentage of annual non-jig TAC	Seasonal allowances (mt)	Sector percentage of annual non-jig TAC	Seasonal allowances (mt)
Jig (3.5% of TAC)	73	N/A	44	N/A	29
Hook-and-line CV	28	0.70	14	0.70	14
Hook-and-line C/P	397	10.90	218	8.90	178
Trawl CV	769	27.70	555	10.70	214
Trawl C/P	48	0.90	18	1.50	30
All Pot CV and Pot C/P	761	19.80	397	18.20	365
Total	2,076	60.00	1,246	40.00	830
Central GOA:					
Jig (1.0% of TAC)	38	N/A	23	N/A	15
Hook-and-line <50 CV	550	9.32	351	5.29	199
Hook-and-line ≥50 CV	253	5.61	351	1.10	41
Hook-and-line C/P	192	4.11	211	1.00	38
Trawl CV [1]	1,597	21.14	796	20.45	771
Trawl C/P	158	2.00	75	2.19	83
All Pot CV and Pot C/P	1,048	17.83	672	9.97	376
Total	3,806	60.00	2,284	40.00	1,522
Eastern GOA:		Inshore (90% of Annual TAC)		Offshore (10% of Annual TAC)	
	549		494		55

[1] Trawl catcher vessels participating in Rockfish Program cooperatives receive 3.81 percent, or 145 mt, of the annual Central GOA TAC (see Table 28c to 50 CFR part 679), which is deducted from the Trawl CV B season allowance (see Table 13. Final 2021 Apportionments of Rockfish Secondary Species in the Central GOA and Table 28c to 50 CFR part 679).

Allocations of the Sablefish TAC Amounts to Vessels Using Fixed and Trawl Gear

Section 679.20(a)(4)(i) and (ii) require allocations of sablefish TACs for each of the regulatory areas and districts to fixed and trawl gear. In the Western and Central Regulatory Areas, 80 percent of each TAC is allocated to fixed gear, and 20 percent of each TAC is allocated to trawl gear. In the Eastern Regulatory Area, 95 percent of the TAC is allocated to fixed gear, and 5 percent is allocated to trawl gear. The trawl gear allocation in the Eastern Regulatory Area may only be used to support incidental catch of sablefish using trawl gear while directed fishing for other target species (§ 679.20(a)(4)(i)).

In recognition of the prohibition against trawl gear in the SEO District of the Eastern Regulatory Area, the Council recommended and NMFS approves specifying for incidental catch the allocation of 5 percent of the combined Eastern Regulatory Area sablefish TAC to trawl gear in the WYK District of the Eastern Regulatory Area. The remainder of the WYK District sablefish TAC is allocated to vessels using fixed gear. NMFS allocates 100 percent of the sablefish TAC in the SEO District to vessels using fixed gear. This action results in a 2020 allocation of 300 mt to trawl gear and 2,043 mt to fixed gear in the WYK District, a 2020 allocation of 3,663 mt to fixed gear in the SEO District, and a 2021 allocation of 464 mt to trawl gear in the WYK District. Table 7 lists the allocations of the 2020 sablefish TACs to fixed and trawl gear. Table 8 lists the allocations of the 2021 sablefish TACs to trawl gear.

The Council recommended that a trawl sablefish TAC be established for two years so that retention of incidental catch of sablefish by trawl gear could commence in January in the second year of the groundfish harvest specifications. Both the 2020 and 2021 trawl allocations are specified in these final harvest specifications, in Tables 7 and 8, respectively.

The Council also recommended that the fixed gear sablefish TAC be established annually to ensure that this IFQ fishery is conducted concurrently with the halibut IFQ fishery and is based on the most recent survey information. Since there is an annual assessment for sablefish and since the final harvest specifications are expected to be published before the IFQ season begins in March 2020, the Council recommended that the fixed gear sablefish TAC be set annually, rather than for two years, so that the best scientific information available could be considered in establishing the sablefish ABCs and TACs. Accordingly, Table 7 lists the 2020 fixed gear allocations, and the 2021 fixed gear allocations will be specified in the 2021 and 2022 harvest specifications.

With the exception of the trawl allocations that are provided to the Rockfish Program (see Table 28c to 50 CFR part 679), directed fishing for sablefish with trawl gear in the GOA is closed during the fishing year. Also, fishing for groundfish with trawl gear is prohibited prior to January 20 (§ 679.23(c)). Therefore, it is not likely that the sablefish allocation to trawl gear would be reached before the effective date of the final 2020 and 2021 harvest specifications.

TABLE 7—FINAL 2020 SABLEFISH TAC AMOUNTS IN THE GULF OF ALASKA AND ALLOCATIONS TO FIXED AND TRAWL GEAR

[Values are rounded to the nearest metric ton]

Area/district	TAC	Fixed gear allocation	Trawl gear allocation
Western	1,942	1,554	388
Central [1]	6,445	5,156	1,289
West Yakutat [2]	2,343	2,043	300
Southeast Outside	3,663	3,663	0
Total	14,393	12,415	1,978

[1] The trawl allocation of sablefish in the Central Regulatory Area is further apportioned to the Rockfish Program cooperatives (663 mt). See Table 12: Final 2020 Apportionments of Rockfish Secondary Species in the Central GOA. This results in 626 mt being available for the non-Rockfish Program trawl fisheries.

[2] The trawl allocation is based on allocating 5 percent of the combined Eastern Regulatory Area (West Yakutat and Southeast Outside Districts) sablefish TAC as incidental catch to trawl gear in the West Yakutat District.

TABLE 8—FINAL 2021 SABLEFISH TAC AMOUNTS IN THE GULF OF ALASKA AND ALLOCATION TO TRAWL GEAR [1]

[Values are rounded to the nearest metric ton]

Area/district	TAC	Fixed gear allocation	Trawl gear allocation
Western	3,003	n/a	601
Central [2]	9,963	n/a	1,993
West Yakutat [3]	3,323	n/a	464
Southeast Outside	5,963	n/a	0
Total	22,252	n/a	3,058

[1] The Council recommended that the final 2021 harvest specifications for the fixed gear sablefish Individual Fishing Quota fisheries not be specified in the final 2020 and 2021 harvest specifications.

[2] The trawl allocation of sablefish in the Central Regulatory Area is further apportioned to the Rockfish Program cooperatives (1,025 mt). See Table 13: Final 2021 Apportionments of Rockfish Secondary Species in the Central GOA. This results in 968 mt being available for the non-Rockfish Program trawl fisheries.

[3] The trawl allocation is based on allocating 5 percent of the combined Eastern Regulatory Area (West Yakutat and Southeast Outside Districts) sablefish TAC as incidental catch to trawl gear in the West Yakutat District.

Allocations, Apportionments, and Sideboard Limits for the Rockfish Program

These final 2020 and 2021 harvest specifications for the GOA include the fishery cooperative allocations and sideboard limitations established by the Rockfish Program. Program participants are primarily trawl CVs and trawl C/Ps, with limited participation by vessels using longline gear. The Rockfish Program assigns quota share and cooperative quota to participants for primary species (Pacific ocean perch, northern rockfish, and dusky rockfish) and secondary species (Pacific cod, rougheye and blackspotted rockfish, sablefish, shortraker rockfish, and thornyhead rockfish), allows a participant holding a license limitation program (LLP) license with rockfish quota share to form a rockfish cooperative with other persons, and allows holders of C/P LLP licenses to opt out of the fishery. The Rockfish Program also has an entry level fishery for rockfish primary species for vessels using longline gear. Longline gear includes hook-and-line, jig, troll, and handline gear.

Under the Rockfish Program, rockfish primary species in the Central GOA are allocated to participants after deducting for incidental catch needs in other directed groundfish fisheries (§ 679.81(a)(2)). Participants in the Rockfish Program also receive a portion of the Central GOA TAC of specific secondary species. In addition to groundfish species, the Rockfish Program allocates a portion of the halibut PSC limit (191 mt) from the third season deep-water species fishery allowance for the GOA trawl fisheries to Rockfish Program participants (§ 679.81(d) and Table 28d to 50 CFR part 679). The Rockfish Program also establishes sideboard limits to restrict the ability of harvesters operating under the Rockfish Program to increase their participation in other, non-Rockfish Program fisheries. These restrictions and halibut PSC limits are discussed in a subsequent section in this rule titled ''Rockfish Program Groundfish Sideboard and Halibut PSC Limitations.''

Section 679.81(a)(2)(ii) and Table 28e to 50 CFR part 679 require allocations of 5 mt of Pacific ocean perch, 5 mt of northern rockfish, and 50 mt of dusky rockfish to the entry level longline fishery in 2020 and 2021. The allocation for the entry level longline fishery may increase incrementally each year if the catch exceeds 90 percent of the allocation of a species. The incremental increase in the allocation would continue each year until it reaches the maximum percent of the TAC for that species. In 2019, the catch of Pacific ocean perch, northern rockfish, and dusky rockfish did not attain the 90 percent threshold, and those final allocations for 2020 remain the same as the 2019 allocations. The remainder of the TACs for the rockfish primary species are allocated to the CV and C/P cooperatives (§ 679.81(a)(2)(iii)). Table 9 lists the allocations of the 2020 and 2021 TACs for each rockfish primary species to the entry level longline fishery, the potential incremental increases for future years, and the maximum percentages of the TACs assigned to the Rockfish Program that may be allocated to the rockfish entry level longline fishery.

TABLE 9—FINAL 2020 AND INITIAL 2021 ALLOCATIONS OF ROCKFISH PRIMARY SPECIES TO THE ENTRY LEVEL LONGLINE FISHERY IN THE CENTRAL GULF OF ALASKA

Rockfish primary species	2020 and 2021 allocations	Incremental increase in 2021 if < 90% of 2020 allocation is harvested	Up to maximum % of TAC
Pacific ocean perch	5 metric tons	5 metric tons	1
Northern rockfish	5 metric tons	5 metric tons	2
Dusky rockfish	50 metric tons	20 metric tons	5

Section 679.81 requires allocations of rockfish primary species among various sectors of the Rockfish Program. Tables 10 and 11 list the final 2020 and 2021 allocations of rockfish primary species in the Central GOA to the entry level longline fishery, and rockfish CV and C/P cooperatives in the Rockfish Program. NMFS also is setting aside incidental catch amounts (ICAs) for other directed fisheries in the Central GOA of 3,000 mt of Pacific ocean perch, 300 mt of northern rockfish, and 250 mt of dusky rockfish. These amounts are based on recent average incidental catches in the Central GOA by other groundfish fisheries.

Allocations among vessels belonging to CV or C/P cooperatives are not included in these final harvest specifications. Rockfish Program applications for CV cooperatives and C/P cooperatives are not due to NMFS until March 1 of each calendar year; therefore, NMFS cannot calculate 2020 and 2021 allocations in conjunction with these final harvest specifications. NMFS will post the 2020 allocations on the Alaska Region website at *https://www.fisheries.noaa.gov/alaska/sustainable-fisheries/alaska-fisheries-management-reports#central-goa-rockfish* when they become available after March 1.

TABLE 10—FINAL 2020 ALLOCATIONS OF ROCKFISH PRIMARY SPECIES IN THE CENTRAL GULF OF ALASKA TO THE ENTRY LEVEL LONGLINE FISHERY AND ROCKFISH COOPERATIVES IN THE ROCKFISH PROGRAM

[Values are rounded to the nearest metric ton]

Rockfish primary species	Central GOA annual TAC	Incidental catch allowance	TAC minus ICA	Allocation to the entry level longline [1] fishery	Allocation to the rockfish cooperatives [2]
Pacific ocean perch	23,678	3,000	20,678	5	20,673
Northern rockfish	3,178	300	2,878	5	2,873
Dusky rockfish	2,746	250	2,496	50	2,446
Total	29,602	3,550	26,052	60	25,992

[1] Longline gear includes hook-and-line, jig, troll, and handline gear (50 CFR 679.2).
[2] Rockfish cooperatives include vessels in CV and C/P cooperatives (50 CFR 679.81).

TABLE 11—FINAL 2021 ALLOCATIONS OF ROCKFISH PRIMARY SPECIES IN THE CENTRAL GULF OF ALASKA TO THE ENTRY LEVEL LONGLINE FISHERY AND ROCKFISH COOPERATIVES IN THE ROCKFISH PROGRAM

[Values are rounded to the nearest metric ton]

Rockfish primary species	Central GOA annual TAC	Incidental catch allowance	TAC minus ICA	Allocation to the entry level longline [1] fishery	Allocation to the rockfish cooperatives [2]
Pacific ocean perch	22,727	3,000	19,727	5	19,722
Northern rockfish	3,027	300	2,727	5	2,722
Dusky rockfish	2,688	250	2,438	50	2,388
Total	28,442	3,550	24,892	60	24,832

[1] Longline gear includes hook-and-line, jig, troll, and handline gear (50 CFR 679.2).
[2] Rockfish cooperatives include vessels in CV and C/P cooperatives (50 CFR 679.81).

Section 679.81(c) and Table 28c to 50 CFR part 679 require allocations of rockfish secondary species to CV and C/P cooperatives in the Central GOA. CV cooperatives receive allocations of Pacific cod, sablefish from the trawl gear allocation, and thornyhead rockfish. C/P cooperatives receive allocations of sablefish from the trawl gear allocation, rougheye and blackspotted rockfish, shortraker rockfish, and thornyhead rockfish. Tables 12 and 13 list the apportionments of the 2020 and 2021 TACs of rockfish secondary species in the Central GOA to CV and C/P cooperatives.

TABLE 12—FINAL 2020 APPORTIONMENTS OF ROCKFISH SECONDARY SPECIES IN THE CENTRAL GOA TO CATCHER VESSEL AND CATCHER/PROCESSOR COOPERATIVES

[Values are rounded to the nearest metric ton]

Rockfish secondary species	Central GOA annual TAC	Catcher vessel cooperatives		Catcher/processor cooperatives	
		Percentage of TAC	Apportionment (mt)	Percentage of TAC	Apportionment (mt)
Pacific cod	3,806	3.81	145	0.00	0
Sablefish	6,445	6.78	437	3.51	226
Shortraker rockfish	284	0.00	0	40.00	114
Rougheye/blackspotted rockfish	455	0.00	0	58.87	268
Thornyhead rockfish	911	7.84	71	26.50	241

TABLE 13—FINAL 2021 APPORTIONMENTS OF ROCKFISH SECONDARY SPECIES IN THE CENTRAL GOA TO CATCHER VESSEL AND CATCHER/PROCESSOR COOPERATIVES

[Values are rounded to the nearest metric ton]

Rockfish secondary species	Central GOA annual TAC	Catcher vessel cooperatives		Catcher/processor cooperatives	
		Percentage of TAC	Apportionment (mt)	Percentage of TAC	Apportionment (mt)
Pacific cod	3,806	3.81	145	0.00	0
Sablefish	9,963	6.78	675	3.51	350
Shortraker rockfish	284	0.00	0	40.00	114
Rougheye/blackspotted rockfish	455	0.00	0	58.87	268
Thornyhead rockfish	911	7.84	71	26.50	241

Halibut PSC Limits

Section 679.21(d) establishes annual halibut PSC limit apportionments to trawl gear and hook-and-line gear, and authorizes the establishment of apportionments for pot gear. In December 2019, the Council recommended halibut PSC limits of 1,706 mt for trawl gear, 257 mt for hook-and-line gear, and 9 mt for the demersal shelf (DSR) rockfish fishery in the SEO District for both 2020 and 2021.

The DSR fishery in the SEO District is defined at § 679.21(d)(2)(ii)(A). This fishery is apportioned 9 mt of the halibut PSC limit in recognition of its small-scale harvests of groundfish (§ 679.21(d)(2)(i)(A)). The separate halibut PSC limit for the DSR fishery is intended to prevent that fishery from being impacted from the halibut PSC incurred by other GOA fisheries. NMFS estimates low halibut bycatch in the DSR fishery because (1) the duration of the DSR fisheries and the gear soak times are short, (2) the DSR fishery occurs in the winter when there is less overlap in the distribution of DSR and halibut, and (3) the directed commercial DSR fishery has a low DSR TAC. The Alaska Department of Fish and Game sets the commercial GHL for the DSR fishery after deducting (1) estimates of DSR incidental catch in all fisheries (including halibut and subsistence); and (2) the allocation to the DSR sport fishery. Of the 261 mt TAC for DSR in 2019, 50 mt were available for directed fishing by the DSR commercial fishery, of which 18 mt were harvested (through December 16, 2019).

The FMP authorizes the Council to exempt specific gear from the halibut PSC limits. NMFS, after consultation with the Council, exempts pot gear, the sablefish IFQ hook-and-line gear fishery categories, and jig gear from the non-trawl halibut PSC limit for 2020 and 2021. The Council recommended, and NMFS approves, these exemptions because: (1) The pot gear fisheries have low annual halibut bycatch mortality, (2) IFQ program regulations prohibit discard of halibut if any halibut IFQ permit holder on board a catcher vessel holds unused halibut IFQ for that vessel category and the IFQ regulatory area in which the vessel is operating (§ 679.7(f)(11)), (3) some sablefish IFQ fishermen hold halibut IFQ permits and are therefore required to retain the halibut they catch while fishing sablefish IFQ, and (4) NMFS estimates negligible halibut mortality for the jig gear fisheries given the small amount of groundfish harvested by jig gear, the selective nature of jig gear, and the high survival rates of halibut caught and released with jig gear.

The best available information on estimated halibut bycatch consists of data collected by fisheries observers during 2019. The calculated halibut bycatch mortality through December 31, 2019, is 1,102 mt for trawl gear and 76 mt for hook-and-line gear for a total halibut mortality of 1,178 mt. This halibut mortality was calculated using groundfish and halibut catch data from the NMFS Alaska Region's catch accounting system. This accounting system contains historical and recent catch information compiled from each Alaska groundfish fishery.

Section 679.21(d)(4)(i) and (ii) authorizes NMFS to seasonally apportion the halibut PSC limits after consultation with the Council. The FMP and regulations require that the Council and NMFS consider the following information in seasonally apportioning halibut PSC limits: (1) Seasonal distribution of halibut; (2) seasonal distribution of target groundfish species relative to halibut distribution; (3) expected halibut bycatch needs on a seasonal basis relative to changes in halibut biomass and expected catch of target groundfish species; (4) expected bycatch rates on a seasonal basis; (5) expected changes in directed groundfish fishing seasons; (6) expected actual start of fishing effort; and (7) economic effects of establishing seasonal halibut allocations on segments of the target groundfish industry. The Council considered information from the 2019 SAFE report, NMFS catch data, State of Alaska catch data, International Pacific Halibut Commission (IPHC) stock

assessment and mortality data, and public testimony when apportioning the halibut PSC limits. NMFS concurs with the Council's recommendations listed in Table 14, which shows the final 2020 and 2021 Pacific halibut PSC limits, allowances, and apportionments.

Section 679.21(d)(4)(iii) and (iv) specifies that any underages or overages of a seasonal apportionment of a halibut PSC limit will be added to or deducted from the next respective seasonal apportionment within the fishing year.

TABLE 14—FINAL 2020 AND 2021 PACIFIC HALIBUT PROHIBITED SPECIES CATCH (PSC) LIMITS, ALLOWANCES, AND APPORTIONMENTS

[Values are in metric tons]

Trawl gear			Hook-and-line gear [1]				
			Other than DSR			DSR	
Season	Percent	Amount	Season	Percent	Amount	Season	Amount
January 20–April 1	30.5	519	January 1–June 10	86	221	January 1–December 31	9
April 1–July 1	20.0	341	June 10–September 1	2	5		
July 1–August 1	27.0	462	September 1–December 31.	12	31		
August 1–October 1	7.5	128					
October 1–December 31	15.0	256					
Total		1,706			257		9

[1] The Pacific halibut prohibited species catch (PSC) limit for hook-and-line gear is allocated to the DSR fishery in the SEO District and to the hook-and-line fisheries other than the DSR fishery. The hook-and-line sablefish IFQ fishery is exempt from halibut PSC limits, as are pot and jig gear for all groundfish fisheries. Note: Seasonal or sector apportionments may not total precisely due to rounding.

Section 679.21(d)(3)(ii) authorizes further apportionment of the trawl halibut PSC limit to trawl fishery categories listed in § 679.21(d)(3)(iii). The annual apportionments are based on each category's proportional share of the anticipated halibut bycatch mortality during the fishing year and optimization of the total amount of groundfish harvest under the halibut PSC limit. The fishery categories for the trawl halibut PSC limits are: (1) A deep-water species fishery, composed of sablefish, rockfish, deep-water flatfish, rex sole, and arrowtooth flounder; and (2) a shallow-water species fishery, composed of pollock, Pacific cod, shallow-water flatfish, flathead sole, Atka mackerel, and ''other species'' (sculpins, sharks, and octopuses) (§ 679.21(d)(3)(iii)). Halibut mortality incurred while directed fishing for skates with trawl gear accrues towards the shallow-water species fishery halibut PSC limit (69 FR 26320, May 12, 2004).

NMFS will combine available trawl halibut PSC limit apportionments on May 15 during the second season deep-water and shallow-water species fisheries for use in either fishery from May 15 through June 30 (§ 679.21(d)(4)(iii)(D)). This is intended to maintain groundfish harvest while minimizing halibut bycatch by these sectors to the extent practicable. This provides the deep-water and shallow-water species trawl fisheries additional flexibility and the incentive to participate in fisheries at times of the year that may have lower halibut PSC rates relative to other times of the year.

Table 15 lists the final 2020 and 2021 apportionments of trawl halibut PSC limits between the trawl gear deep-water and shallow-water species fishery categories.

Table 28d to 50 CFR part 679 specifies the amount of the trawl halibut PSC limit that is assigned to the CV and C/P sectors that are participating in the Rockfish Program. This includes 117 mt of halibut PSC limit to the CV sector and 74 mt of halibut PSC limit to the C/P sector. These amounts are allocated from the trawl deep-water species fishery's halibut PSC third seasonal apportionment. After the combined CV and C/P halibut PSC limit allocation of 191 mt to the Rockfish Program, 150 mt remains for the trawl deep-water species fishery's halibut PSC third seasonal apportionment.

Section 679.21(d)(4)(iii)(B) limits the amount of the halibut PSC limit allocated to Rockfish Program participants that could be re-apportioned to the general GOA trawl fisheries during the current fishing year to no more than 55 percent of the unused annual halibut PSC limit apportioned to Rockfish Program participants. The remainder of the unused Rockfish Program halibut PSC limit is unavailable for use by any person for the remainder of the fishing year (§ 679.21(d)(4)(iii)(C)).

TABLE 15—FINAL 2020 AND 2021 APPORTIONMENT OF PACIFIC HALIBUT PROHIBITED SPECIES CATCH LIMITS BETWEEN THE TRAWL GEAR DEEP-WATER SPECIES FISHERY AND THE SHALLOW-WATER SPECIES FISHERY CATEGORIES

[Values are in metric tons]

Season	Shallow-water	Deep-water [1]	Total
January 20–April 1	384	135	519
April 1–July 1	85	256	341
July 1–August 1	121	341	462
August 1–October 1	53	75	128
Subtotal January 20–October 1	643	807	1,450
October 1–December 31 [2]			256

TABLE 15—FINAL 2020 AND 2021 APPORTIONMENT OF PACIFIC HALIBUT PROHIBITED SPECIES CATCH LIMITS BETWEEN THE TRAWL GEAR DEEP-WATER SPECIES FISHERY AND THE SHALLOW-WATER SPECIES FISHERY CATEGORIES—Continued

[Values are in metric tons]

Season	Shallow-water	Deep-water [1]	Total
Total			1,706

[1] Vessels participating in cooperatives in the Central GOA Rockfish Program will receive 191 mt of the third season (July 1 through August 1) deep-water species fishery halibut PSC apportionment.

[2] There is no apportionment between trawl shallow-water and deep-water species fishery categories during the fifth season (October 1 through December 31).

Section 679.21(d)(2)(i)(B) requires that the ''other hook-and-line fishery'' halibut PSC limit apportionment to vessels using hook-and-line gear must be apportioned between CVs and C/Ps in accordance with § 679.21(d)(2)(iii) in conjunction with these harvest specifications. A comprehensive description and example of the calculations necessary to apportion the ''other hook-and-line fishery'' halibut PSC limit between the hook-and-line CV and C/P sectors were included in the proposed rule to implement Amendment 83 to the FMP (76 FR 44700, July 26, 2011) and are not repeated here.

Pursuant to § 679.21(d)(2)(iii), the hook-and-line halibut PSC limit for the ''other hook-and-line fishery'' is apportioned between the CV and C/P sectors in proportion to the total Western and Central GOA Pacific cod allocations, which vary annually based on the proportion of the Pacific cod biomass between the Western, Central, and Eastern GOA. Pacific cod is apportioned among these three management areas based on the percentage of overall biomass per area, as calculated in the 2019 Pacific cod stock assessment. Updated information in the final 2019 SAFE report describes this distributional calculation, which allocates ABC among GOA regulatory areas on the basis of the three most recent stock surveys. For 2020 and 2021, the distribution of the total GOA Pacific cod ABC is 32 percent to the Western GOA, 59 percent to the Central GOA, and 9 percent to the Eastern GOA. Therefore, the calculations made in accordance with § 679.21(d)(2)(iii) incorporate the most recent information on GOA Pacific cod distribution with respect to establishing the annual halibut PSC limits for the CV and C/P hook-and-line sectors. Additionally, the annual halibut PSC limits for both the CV and C/P sectors of the ''other hook-and-line fishery'' are divided into three seasonal apportionments, using seasonal percentages of 86 percent, 2 percent, and 12 percent.

For 2020 and 2021, NMFS apportions halibut PSC limits of 144 mt and 113 mt to the hook-and-line CV and hook-and-line C/P sectors, respectively. Table 16 lists the final 2020 and 2021 apportionments of halibut PSC limits between the hook-and-line CV and the hook-and-line C/P sectors of the ''other hook-and-line fishery.''

No later than November 1 of each year, NMFS will calculate the projected unused amount of halibut PSC limit by either of the CV or C/P hook-and-line sectors of the ''other hook-and-line fishery'' for the remainder of the year. The projected unused amount of halibut PSC limit is made available to the other hook-and-line sector for the remainder of that fishing year (§ 679.21(d)(2)(iii)(C)), if NMFS determines that an additional amount of halibut PSC is necessary for that sector to continue its directed fishing operations.

TABLE 16—FINAL 2020 AND 2021 APPORTIONMENTS OF THE ''OTHER HOOK-AND-LINE FISHERY'' ANNUAL HALIBUT PROHIBITED SPECIES CATCH ALLOWANCE BETWEEN THE HOOK-AND-LINE GEAR CATCHER VESSEL AND CATCHER/PROCESSOR SECTORS

[Values are in metric tons]

''Other than DSR'' allowance	Hook-and-line sector	Sector annual amount	Season	Seasonal percentage	Sector seasonal amount
257	Catcher Vessel	144	January 1–June 10	86	124
			June 10–September 1	2	3
			September 1–December 31	12	17
	Catcher/Processor	113	January 1–June 10	86	97
			June 10–September 1	2	2
			September 1–December 31	12	14

Estimates of Halibut Biomass and Stock Condition

The IPHC annually assesses the abundance and potential yield of the Pacific halibut stock using all available data from the commercial and sport fisheries, other removals, and scientific surveys. Additional information on the Pacific halibut stock assessment may be found in the IPHC's 2019 Pacific halibut stock assessment (December 2019), available on the IPHC website at *www.iphc.int.* The IPHC considered the 2019 Pacific halibut stock assessment at its February 2020 annual meeting when it set the 2020 commercial halibut fishery catch limits.

Halibut Discard Mortality Rates

To monitor halibut bycatch mortality allowances and apportionments, the Regional Administrator uses observed halibut incidental catch rates, halibut discard mortality rates (DMRs), and estimates of groundfish catch to project when a fishery's halibut bycatch mortality allowance or seasonal apportionment is reached. Halibut incidental catch rates are based on observers' estimates of halibut incidental catch in the groundfish fishery. DMRs are estimates of the proportion of incidentally caught halibut that do not survive after being returned to the sea. The cumulative

halibut mortality that accrues to a particular halibut PSC limit is the product of a DMR multiplied by the estimated halibut PSC. DMRs are estimated using the best scientific information available in conjunction with the annual GOA stock assessment process. The DMR methodology and findings are included as an appendix to the annual GOA groundfish SAFE report.

In 2016, the DMR estimation methodology underwent revisions per the Council's directive. An interagency halibut working group (IPHC, Council, and NMFS staff) developed improved estimation methods that have undergone review by the GOA Plan Team, SSC, and the Council. A summary of the revised methodology is contained in the GOA proposed 2017 and 2018 harvest specifications (81 FR 87881, December 6, 2016), and the comprehensive discussion of the working group's statistical methodology is available from the Council (see **ADDRESSES**). The DMR working group's revised methodology is intended to improve estimation accuracy, transparency, and transferability in the methodology used for calculating DMRs. The working group will continue to consider improvements to the methodology used to calculate halibut mortality, including potential changes to the reference period (the period of data used for calculating the DMRs). Future DMRs may change based on additional years of observer sampling, which could provide more recent and accurate data and which could improve the accuracy of estimation and progress on methodology. The new methodology will continue to ensure that NMFS is using DMRs that more accurately reflect halibut mortality, which will inform the different sectors of their estimated halibut mortality and allow specific sectors to respond with methods that could reduce mortality and, eventually, the DMR for that sector.

At the December 2019 meeting, the SSC, AP, and the Council concurred with the revised DMR estimation methodology, and NMFS adopts for 2020 and 2021 the DMRs calculated under the revised methodology, which uses an updated 2-year reference period. The final 2020 and 2021 DMRs in this rule are unchanged from the DMRs in the proposed 2020 and 2021 harvest specifications (84 FR 66109, December 3, 2019). Table 17 lists these final 2020 and 2021 DMRs.

TABLE 17—FINAL 2020 AND 2021 HALIBUT DISCARD MORTALITY RATES FOR VESSELS FISHING IN THE GULF OF ALASKA

[Values are percent of halibut assumed to be dead]

Gear	Sector	Groundfish fishery	Halibut discard mortality rate (percent)
Pelagic trawl	Catcher vessel	All	100
	Catcher/processor	All	100
Non-pelagic trawl	Catcher vessel	Rockfish Program	52
	Catcher vessel	All others	68
	Mothership and catcher/processor	All	75
Hook-and-line	Catcher/processor	All	11
	Catcher vessel	All	13
Pot	Catcher vessel and catcher/processor	All	0

Chinook Salmon Prohibited Species Catch Limits

Amendment 93 to the FMP (77 FR 42629, July 20, 2012) established separate Chinook salmon PSC limits in the Western and Central GOA in the directed pollock trawl fishery. These limits require that NMFS close the pollock directed fishery in the Western and Central Regulatory Areas of the GOA if the applicable Chinook salmon PSC limit in that regulatory area is reached (§ 679.21(h)(8)). The annual Chinook salmon PSC limits in the pollock directed fishery of 6,684 salmon in the Western GOA and 18,316 salmon in the Central GOA are set at § 679.21(h)(2)(i) and (ii).

Amendment 97 to the FMP (79 FR 71350, December 2, 2014) established an initial annual PSC limit of 7,500 Chinook salmon for the trawl non-pollock groundfish fisheries in the Western and Central GOA. This limit is apportioned among three sectors directed fishing for groundfish species other than pollock: 3,600 Chinook salmon to trawl C/Ps; 1,200 Chinook salmon to trawl CVs participating in the Rockfish Program; and 2,700 Chinook salmon to trawl CVs not participating in the Rockfish Program (§ 679.21(h)(4)). NMFS will monitor the Chinook salmon PSC in the trawl non-pollock groundfish fisheries and close an applicable sector if it reaches its Chinook salmon PSC limit.

The Chinook salmon PSC limit for two sectors, trawl C/Ps and trawl CVs not participating in the Rockfish Program, may be increased in subsequent years based on the performance of these two sectors and their ability to minimize their use of their respective Chinook salmon PSC limits. If either or both of these two sectors limits its use of Chinook salmon PSC to a specified threshold amount in 2019 (3,120 for trawl C/Ps and 2,340 for Non-Rockfish Program trawl CVs), that sector will receive an incremental increase to its 2020 Chinook salmon PSC limit (§ 679.21(h)(4)). In 2019, the trawl C/P sector did not exceed 3,120 Chinook salmon PSC; therefore, the 2020 trawl C/P sector Chinook salmon PSC limit will be 4,080 Chinook salmon. In 2019, the Non-Rockfish Program trawl CV sector did exceed 2,340 Chinook salmon PSC; therefore, the 2020 Non-Rockfish Program trawl CV sector Chinook salmon PSC limit will be 2,700 Chinook salmon.

American Fisheries Act (AFA) Catcher/Processor and Catcher Vessel Groundfish Harvest and PSC Limits

Section 679.64 establishes groundfish harvesting and processing sideboard limitations on AFA C/Ps and CVs in the GOA. These sideboard limits are necessary to protect the interests of fishermen and processors who do not directly benefit from the AFA from those fishermen and processors who receive exclusive harvesting and processing privileges under the AFA. Section 679.7(k)(1)(ii) prohibits listed AFA C/Ps and C/Ps designated on a listed AFA C/P permit from harvesting any species of groundfish in the GOA. Additionally, § 679.7(k)(1)(iv) prohibits listed AFA C/Ps and C/Ps designated on a listed AFA C/P permit from processing any pollock harvested in a directed pollock fishery in the GOA and any groundfish harvested in Statistical Area 630 of the GOA.

AFA CVs that are less than 125 feet (38.1 meters) length overall, have annual landings of pollock in the Bering Sea and Aleutian Islands less than 5,100 mt, and have made at least 40 GOA groundfish landings from 1995 through 1997 are exempt from GOA CV groundfish sideboard limits under § 679.64(b)(2)(ii). Sideboard limits for non-exempt AFA CVs in the GOA are based on their traditional harvest levels of TAC in groundfish fisheries covered by the FMP. Section 679.64(b)(3)(iv) establishes the CV groundfish sideboard limitations in the GOA based on the aggregate retained catch of non-exempt AFA CVs of each sideboard species or species group from 1995 through 1997 divided by the sum of the TACs for that species or species group available to CVs over the same period.

As discussed earlier in this preamble, NMFS published a final rule (84 FR 2723, February 8, 2019) that establishes regulations to prohibit directed fishing for specific groundfish species or species groups subject to sideboard limits, rather than prohibiting directed fishing for non-exempt AFA CV sideboards through the GOA annual harvest specifications. Those groundfish species or species groups with sideboard limits subject to the final rule are now prohibited to directed fishing in regulation (§ 679.20(d)(1)(iv)(D) and Table 56 to 50 CFR part 679). Beginning with the 2020 and 2021 harvest specifications, NMFS is incorporating these changes into the specification and management of non-exempt AFA CV sideboard limits and will continue to publish only those sideboard limit amounts for groundfish species or species groups not subject to the final rule. This decreases the overall number of sideboard limits specified in the GOA harvest specifications, compared to previous years.

Tables 18 and 19 list the final 2020 and 2021 groundfish sideboard limits for non-exempt AFA CVs. NMFS will deduct all targeted or incidental catch of sideboard species made by non-exempt AFA CVs from the sideboard limits listed in Tables 18 and 19.

TABLE 18—FINAL 2020 GOA NON-EXEMPT AMERICAN FISHERIES ACT CATCHER VESSEL (CV) GROUNDFISH SIDEBOARD LIMITS

[Values are rounded to the nearest metric ton]

Species	Apportionments by season/gear	Area/component	Ratio of 1995–1997 non-exempt AFA CV catch to 1995–1997 TAC	Final 2020 TACs [3]	Final 2020 non-exempt AFA CV sideboard limit
Pollock	A Season	Shumagin (610)	0.6047	517	313
	January 20–March 10	Chirikof (620)	0.1167	18,757	2,189
		Kodiak (630)	0.2028	5,783	1,173
	B Season	Shumagin (610)	0.6047	517	313
	March 10–May 31	Chirikof (620)	0.1167	22,222	2,593
		Kodiak (630)	0.2028	2,318	470
	C Season	Shumagin (610)	0.6047	9,070	5,485
	August 25–October 1	Chirikof (620)	0.1167	6,739	786
		Kodiak (630)	0.2028	9,248	1,875
	D Season	Shumagin (610)	0.6047	9,070	5,485
	October 1–November 1	Chirikof (620)	0.1167	6,739	786
		Kodiak (630)	0.2028	9,248	1,875
	Annual	WYK (640)	0.3495	5,554	1,941
		SEO (650)	0.3495	10,148	3,547
Pacific cod	A Season [1]	W	0.1331	1,246	166
	January 1–June 10	C	0.0692	2,284	158
	B Season [2]	W	0.1331	830	111
	September 1–December 31	C	0.0692	1,522	105
Flatfish, shallow-water	Annual	W	0.0156	13,250	207
		C	0.0587	27,732	1,628
Flatfish, deep-water	Annual	W	0.0647	226	
		C	0.0128	1,948	126
Rex sole	Annual	C	0.0384	8,579	329
Arrowtooth flounder	Annual	C	0.0280	68,669	1,923
Flathead sole	Annual	C	0.0213	15,400	328
Pacific ocean perch	Annual	C	0.0748	23,678	1,771
		E	0.0466	6,123	285
Northern rockfish	Annual	C	0.0277	3,178	88

[1] The Pacific cod A season for trawl gear does not open until January 20.
[2] The Pacific cod B season for trawl gear closes November 1.
[3] The Western and Central GOA and WYK District area apportionments of pollock are considered ACLs.

TABLE 19—FINAL 2021 GOA NON-EXEMPT AMERICAN FISHERIES ACT CATCHER VESSEL (CV) GROUNDFISH SIDEBOARD LIMITS

[Values are rounded to the nearest metric ton]

Species	Apportionments by season/gear	Area/component	Ratio of 1995–1997 non-exempt AFA CV catch to 1995–1997 TAC	Final 2021 TACs [3]	Final 2021 non-exempt AFA CV sideboard limit
Pollock	A Season—January 20–March 10	Shumagin (610)	0.6047	533	322
		Chirikof (620)	0.1167	19,344	2,257
		Kodiak (630)	0.2028	5,964	1,209
	B Season—March 10–May 31	Shumagin (610)	0.6047	533	322

TABLE 19—FINAL 2021 GOA NON-EXEMPT AMERICAN FISHERIES ACT CATCHER VESSEL (CV) GROUNDFISH SIDEBOARD LIMITS—Continued

[Values are rounded to the nearest metric ton]

Species	Apportionments by season/gear	Area/component	Ratio of 1995–1997 non-exempt AFA CV catch to 1995–1997 TAC	Final 2021 TACs [3]	Final 2021 non-exempt AFA CV sideboard limit
		Chirikof (620)	0.1167	22,917	2,674
		Kodiak (630)	0.2028	2,391	485
	C Season—August 25–October 1	Shumagin (610)	0.6047	9,354	5,656
		Chirikof (620)	0.1167	6,950	811
		Kodiak (630)	0.2028	9,537	1,934
	D Season—October 1–November 1	Shumagin (610)	0.6047	9,354	5,656
		Chirikof (620)	0.1167	6,950	811
		Kodiak (630)	0.2028	9,537	1,934
	Annual	WYK (640)	0.3495	5,728	2,002
		SEO (650)	0.3495	10,148	3,547
Pacific cod	A Season [1]—January 1–June 10	W	0.1331	1,246	166
		C	0.0692	2,284	158
	B Season [2]—September 1–December 31	W	0.1331	830	111
		C	0.0692	1,522	105
Flatfish, shallow-water	Annual	W	0.0156	13,250	207
		C	0.0587	28,205	1,656
Flatfish, deep-water	Annual	C	0.0647	1,914	124
		E	0.0128	3,787	48
Rex sole	Annual	C	0.0384	8,912	342
Arrowtooth flounder	Annual	C	0.0280	66,683	1,867
Flathead sole	Annual	C	0.0213	15,400	328
Pacific ocean perch	Annual	C	0.0748	22,727	1,700
	Annual	E	0.0466	5,877	274
Northern rockfish	Annual	C	0.0277	3,027	84

[1] The Pacific cod A season for trawl gear does not open until January 20.
[2] The Pacific cod B season for trawl gear closes November 1.
[3] The Western and Central GOA and WYK District area apportionments of pollock are considered ACLs.

Non-Exempt AFA Catcher Vessel Halibut PSC Limits

The halibut PSC sideboard limits for non-exempt AFA CVs in the GOA are based on the aggregate retained groundfish catch by non-exempt AFA CVs in each PSC target category from 1995 through 1997 divided by the retained catch of all vessels in that fishery from 1995 through 1997 (§ 679.64(b)(4)(ii)). Table 20 lists the final 2020 and 2021 non-exempt AFA CV halibut PSC limits for vessels using trawl gear in the GOA.

TABLE 20—FINAL 2020 AND 2021 NON-EXEMPT AFA CV HALIBUT PROHIBITED SPECIES CATCH (PSC) SIDEBOARD LIMITS FOR VESSELS USING TRAWL GEAR IN THE GOA

[Values are rounded to nearest metric ton]

Season	Season dates	Target fishery	Ratio of 1995–1997 non-exempt AFA CV retained catch to total retained catch	2020 and 2021 PSC limit	2020 and 2021 non-exempt AFA CV PSC limit
1	January 20–April 1	shallow-water	0.340	384	131
		deep-water	0.070	135	9
2	April 1–July 1	shallow-water	0.340	85	29
		deep-water	0.070	256	18
3	July 1–August 1	shallow-water	0.340	121	41
		deep-water	0.070	341	24
4	August 1–October 1	shallow-water	0.340	53	18
		deep-water	0.070	75	5
5	October 1–December 31	all targets	0.205	256	52
Annual		Total shallow-water			219
		Total deep-water			56
		Total, all season and categories		1,706	328

Non-AFA Crab Vessel Groundfish Harvest Limitations

Section 680.22 establishes groundfish catch limits for vessels with a history of participation in the Bering Sea snow crab fishery to prevent these vessels from using the increased flexibility provided by the Crab Rationalization (CR) Program to expand their level of participation in the GOA groundfish fisheries. Sideboard limits restrict these vessels' catch to their collective

historical landings in each GOA groundfish fishery (except the fixed-gear sablefish fishery). Sideboard limits also apply to catch made using an LLP license derived from the history of a restricted vessel, even if that LLP license is used on another vessel.

The basis for these sideboard limits is described in detail in the final rules implementing the major provisions of the CR Program, including Amendments 18 and 19 to the Fishery Management Plan for Bering Sea/Aleutian Islands King and Tanner Crabs (Crab FMP) (70 FR 10174, March 2, 2005), Amendment 34 to the Crab FMP (76 FR 35772, June 20, 2011), Amendment 83 to the GOA FMP (76 FR 74670, December 1, 2011), and Amendment 45 to the Crab FMP (80 FR 28539, May 19, 2015).

As discussed earlier in this preamble, NMFS published a final rule (84 FR 2723, February 8, 2019) that establishes regulations to prohibit directed fishing for specific groundfish species or species groups subject to sideboard limits, rather than prohibiting directed fishing for non-AFA crab vessel sideboards through the GOA annual harvest specifications. Those groundfish species or species groups with sideboard limits subject to the final rule are now prohibited to directed fishing in regulation (§ 680.22(e)(1)(i) and (iii)). Beginning with the 2020 and 2021 harvest specifications, NMFS is incorporating such changes into the specification and the management of non-AFA crab vessel sideboard limits and will continue to publish only those non-AFA crab vessel sideboard limit amounts for groundfish species not subject to the final rule. This decreases the overall number of sideboard limits specified in the GOA harvest specifications, compared to previous years.

Tables 21 and 22 list the final 2020 and 2021 groundfish sideboard limitations for non-AFA crab vessels. All targeted or incidental catch of sideboard species made by non-AFA crab vessels or associated LLP licenses will be deducted from these sideboard limits.

TABLE 21—FINAL 2020 GOA NON-AMERICAN FISHERIES ACT CRAB VESSEL GROUNDFISH SIDEBOARD LIMITS

[Values are rounded to the nearest metric ton]

Species	Season/gear	Area/component/gear	Ratio of 1996–2000 non-AFA crab vessel catch to 1996–2000 total harvest	Final 2020 TACs	Final 2020 non-AFA crab vessel sideboard limit
Pacific cod	A Season	Western Pot CV	0.0997	1,246	124
	January 1–June 10	Central Pot CV	0.0474	2,284	108
	B Season	Western Pot CV	0.0997	830	83
	September 1–December 31	Central Pot CV	0.0474	1,522	72

TABLE 22—FINAL 2021 GOA NON-AMERICAN FISHERIES ACT CRAB VESSEL GROUNDFISH SIDEBOARD LIMITS

[Values are rounded to the nearest metric ton]

Species	Season/gear	Area/component/gear	Ratio of 1996–2000 non-AFA crab vessel catch to 1996–2000 total harvest	Final 2021 TACs	Final 2021 non-AFA crab vessel sideboard limit
Pacific cod	A Season	Western Pot CV	0.0997	1,246	124
	January 1–June 10	Central Pot CV	0.0474	2,284	108
	B Season	Western Pot CV	0.0997	830	83
	September 1–December 31	Central Pot CV	0.0474	1,522	72

Rockfish Program Groundfish Sideboard and Halibut PSC Limitations

The Rockfish Program establishes three classes of sideboard provisions: CV groundfish sideboard restrictions, C/P rockfish sideboard restrictions, and C/P opt-out vessel sideboard restrictions (§ 679.82(c)(1)). These sideboards are intended to limit the ability of rockfish harvesters to expand into other GOA groundfish fisheries.

CVs participating in the Rockfish Program may not participate in directed fishing for dusky rockfish, Pacific ocean perch, and northern rockfish in the West Yakutat District and Western GOA from July 1 through July 31. Also, CVs may not participate in directed fishing for arrowtooth flounder, deep-water flatfish, and rex sole in the GOA from July 1 through July 31 (§ 679.82(d)).

C/Ps participating in Rockfish Program cooperatives are restricted by rockfish and halibut PSC sideboard limits. These C/Ps are prohibited from directed fishing for dusky rockfish, Pacific ocean perch, and northern rockfish in the West Yakutat District and Western GOA from July 1 through July 31 (§ 679.82(e)(2)). Holders of C/P-designated LLP licenses that opt out of participating in a Rockfish Program cooperative will be able to access that portion of each rockfish sideboard limit that is not assigned to rockfish cooperatives (§ 679.82 (e)(7)). The sideboard ratio for each fishery in the West Yakutat District and the Western GOA is set forth in § 679.82(e)(4). Tables 23 and 24 list the final 2020 and 2021 Rockfish Program C/P sideboard limits in the West Yakutat District and the Western GOA. Due to confidentiality requirements associated with fisheries data, the sideboard limits for the West Yakutat District are not displayed.

TABLE 23—FINAL 2020 ROCKFISH PROGRAM SIDEBOARD LIMITS FOR THE WESTERN GOA AND WEST YAKUTAT DISTRICT BY FISHERY FOR THE CATCHER/PROCESSOR SECTOR

[Values are rounded to the nearest metric ton]

Area	Fishery	C/P sector (% of TAC)	Final 2020 TACs	Final 2020 C/P limit
Western GOA	Dusky rockfish	72.3	776	561.
	Pacific ocean perch	50.6	1,437	727.
	Northern rockfish	74.3	1,133	884.
West Yakutat District	Dusky rockfish	Confidential [1]	115	Confidential.[1]
	Pacific ocean perch	Confidential [1]	1,470	Confidential.[1]

[1] Not released due to confidentiality requirements associated with fish ticket data, as established by NMFS and the State of Alaska.

TABLE 24—FINAL 2021 ROCKFISH PROGRAM SIDEBOARD LIMITS FOR THE WESTERN GOA AND WEST YAKUTAT DISTRICT BY FISHERY FOR THE CATCHER/PROCESSOR SECTOR

[Values are rounded to the nearest metric ton]

Area	Fishery	C/P sector (% of TAC)	Final 2021 TACs	Final 2021 C/P limit
Western GOA	Dusky rockfish	72.3	759	549.
	Pacific ocean perch	50.6	1,379	698.
	Northern rockfish	74.3	1,079	802.
West Yakutat District	Dusky rockfish	Confidential [1]	113	Confidential.[1]
	Pacific ocean perch	Confidential [1]	1,410	Confidential.[1]

[1] Not released due to confidentiality requirements associated with fish ticket data, as established by NMFS and the State of Alaska.

Under the Rockfish Program, the C/P sector is subject to halibut PSC sideboard limits for the trawl deep-water and shallow-water species fisheries from July 1 through July 31 (§ 679.82(e)(3) and (5)). Halibut PSC sideboard ratios by fishery are set forth in § 679.82(e)(5). No halibut PSC sideboard limits apply to the CV sector, as CVs participating in cooperatives receive a portion of the annual halibut PSC limit. C/Ps that opt out of the Rockfish Program are able to access that portion of the deep-water and shallow-water halibut PSC sideboard limit not assigned to C/P rockfish cooperatives. The sideboard provisions for C/Ps that elect to opt out of participating in a rockfish cooperative are described in § 679.82(c), (e), and (f). Sideboard limits are linked to the catch history of specific vessels that may choose to opt out. After March 1, NMFS will determine which C/Ps have opted-out of the Rockfish Program in 2020, and NMFS will know the ratios and amounts used to calculate opt-out sideboard ratios. NMFS will then calculate any applicable opt-out sideboards for 2020 and post these limits on the Alaska Region website at *https://www.fisheries.noaa.gov/alaska/sustainable-fisheries/alaska-fisheries-management-reports#central-goa-rockfish.* Table 25 lists the final 2020 and 2021 Rockfish Program halibut PSC sideboard limits for the C/P sector.

TABLE 25—FINAL 2020 AND 2021 ROCKFISH PROGRAM HALIBUT PSC SIDEBOARD LIMITS FOR THE CATCHER/PROCESSOR SECTOR

[Values are rounded to the nearest metric ton]

Sector	Shallow-water species fishery halibut PSC sideboard ratio (percent)	Deep-water species fishery halibut PSC sideboard ratio (percent)	2020 and 2021 halibut mortality limit (mt)	Annual shallow-water species fishery halibut PSC sideboard limit (mt)	Annual deep-water species fishery halibut PSC sideboard limit (mt)
Catcher/processor	0.10	2.50	1,706	2	43

Amendment 80 Program Groundfish and PSC Sideboard Limits

Amendment 80 to the Fishery Management Plan for Groundfish of the Bering Sea and Aleutian Islands Management Area (Amendment 80 Program) established a limited access privilege program for the non-AFA trawl C/P sector. The Amendment 80 Program established groundfish and halibut PSC catch limits for Amendment 80 Program participants to limit the ability of participants eligible for the Amendment 80 Program to expand their harvest efforts in the GOA.

Section 679.92 establishes groundfish harvesting sideboard limits on all Amendment 80 program vessels, other than the F/V *Golden Fleece,* to amounts no greater than the limits listed in Table 37 to 50 CFR part 679. Under § 679.92(d), the F/V *Golden Fleece* is prohibited from directed fishing for pollock, Pacific cod, Pacific ocean perch, dusky rockfish, and northern rockfish in the GOA.

Groundfish sideboard limits for Amendment 80 Program vessels operating in the GOA are based on their average aggregate harvests from 1998 through 2004 (72 FR 52668, September 14, 2007). Tables 26 and 27 list the final 2020 and 2021 groundfish sideboard limits for Amendment 80 Program vessels. NMFS will deduct all targeted or incidental catch of sideboard species

made by Amendment 80 Program vessels from the sideboard limits in Tables 26 and 27.

TABLE 26—FINAL 2020 GOA GROUNDFISH SIDEBOARD LIMITS FOR AMENDMENT 80 PROGRAM VESSELS

[Values are rounded to nearest metric ton]

Species	Apportionments and allocations by season	Area	Ratio of Amendment 80 sector vessels 1998–2004 catch to TAC	2020 TAC (mt)	2020 Amendment 80 vessel sideboards (mt)
Pollock	A Season	Shumagin (610)	0.003	517	2
	January 20–March 10	Chirikof (620)	0.002	18,757	38
		Kodiak (630)	0.002	5,783	12
	B Season	Shumagin (610)	0.003	517	2
	March 10–May 31	Chirikof (620)	0.002	22,222	44
		Kodiak (630)	0.002	2,318	5
	C Season	Shumagin (610)	0.003	9,070	27
	August 25–October 1	Chirikof (620)	0.002	6,739	13
		Kodiak (630)	0.002	9,248	18
	D Season	Shumagin (610)	0.003	9,070	27
	October 1–November 1	Chirikof (620)	0.002	6,739	13
		Kodiak (630)	0.002	9,248	18
	Annual	WYK (640)	0.002	5,554	11
Pacific cod	A Season [1]	W	0.020	1,246	25
	January 1–June 10	C	0.044	2,284	100
	B Season [2]	W	0.020	830	17
	September 1–December 31	C	0.044	1,522	67
	Annual	WYK	0.034	549	19
Pacific ocean perch	Annual	W	0.994	1,437	1,428
		WYK	0.961	1,470	1,413
Northern rockfish	Annual	W	1.000	1,133	1,133
Dusky rockfish	Annual	W	0.764	776	593
		WYK	0.896	115	103

[1] The Pacific cod A season for trawl gear does not open until January 20.
[2] The Pacific cod B season for trawl gear closes November 1.

TABLE 27—FINAL 2021 GOA GROUNDFISH SIDEBOARD LIMITS FOR AMENDMENT 80 PROGRAM VESSELS

[Values are rounded to nearest metric ton]

Species	Apportionments and allocations by season	Area	Ratio of Amendment 80 sector vessels 1998–2004 catch to TAC	2021 TAC (mt)	2021 Amendment 80 vessel sideboards (mt)
Pollock	A Season	Shumagin (610)	0.003	533	2
	January 20–March 10	Chirikof (620)	0.002	19,344	39
		Kodiak (630)	0.002	5,964	12
	B Season	Shumagin (610)	0.003	533	2
	March 10–May 31	Chirikof (620)	0.002	22,917	46
		Kodiak (630)	0.002	2,391	5
	C Season	Shumagin (610)	0.003	9,354	28
	August 25–October 1	Chirikof (620)	0.002	6,950	14
		Kodiak (630)	0.002	9,537	19
	D Season	Shumagin (610)	0.003	9,354	28
	October 1–November 1	Chirikof (620)	0.002	6,950	14
		Kodiak (630)	0.002	9,537	19
	Annual	WYK (640)	0.002	5,728	11
Pacific cod	A Season [1]	W	0.020	1,246	25
	January 1–June 10	C	0.044	2,284	100
	B Season [2]	W	0.020	830	17
	September 1–December 31	C	0.044	1,522	67
	Annual	WYK	0.034	549	19
Pacific ocean perch	Annual	W	0.994	1,379	1,371
		WYK	0.961	1,410	1,355
Northern rockfish	Annual	W	1.000	1,079	1,079
Dusky rockfish	Annual	W	0.764	759	580
		WYK	0.896	113	101

[1] The Pacific cod A season for trawl gear does not open until January 20.
[2] The Pacific cod B season for trawl gear closes November 1.

The halibut PSC sideboard limits for Amendment 80 Program vessels in the GOA are based on the historic use of halibut PSC by Amendment 80 Program vessels in each PSC target category from 1998 through 2004. These values are slightly lower than the average historic use to accommodate two factors: Allocation of halibut PSC cooperative quota under the Rockfish Program and the exemption of the F/V *Golden Fleece* from this restriction (§ 679.92(b)(2)). Table 28 lists the final 2020 and 2021 halibut PSC sideboard limits for Amendment 80 Program vessels. These tables incorporate the maximum percentages of the halibut PSC sideboard limits that may be used by Amendment 80 Program vessels as contained in Table 38 to 50 CFR part 679. Any residual amount of a seasonal Amendment 80 halibut PSC sideboard limit may carry forward to the next season limit (§ 679.92(b)(2)).

TABLE 28—FINAL 2020 AND 2021 HALIBUT PSC SIDEBOARD LIMITS FOR AMENDMENT 80 PROGRAM VESSELS IN THE GOA

[Values are rounded to nearest metric ton]

Season	Season dates	Target fishery	Historic Amendment 80 use of the annual halibut PSC limit catch (ratio)	2020 and 2021 annual PSC limit (mt)	2020 and 2021 Amendment 80 vessel PSC limit
1	January 20–April 1	shallow-water	0.0048	1,706	8
		deep-water	0.0115	1,706	20
2	April 1–July 1	shallow-water	0.0189	1,706	32
		deep-water	0.1072	1,706	183
3	July 1–August 1	shallow-water	0.0146	1,706	25
		deep-water	0.0521	1,706	89
4	August 1–October 1	shallow-water	0.0074	1,706	13
		deep-water	0.0014	1,706	2
5	October 1–December 31	shallow-water	0.0227	1,706	39
		deep-water	0.0371	1,706	63
Total					474

Directed Fishing Closures

Pursuant to § 679.20(d)(1)(i), if the Regional Administrator determines 1) that any allocation or apportionment of a target species or species group allocated or apportioned to a fishery will be reached; or 2) with respect to pollock and Pacific cod, that an allocation or apportionment to an inshore or offshore component or sector allocation will be reached, then the Regional Administrator may establish a directed fishing allowance (DFA) for that species or species group. If the Regional Administrator establishes a DFA and that allowance is or will be reached before the end of the fishing season or year, NMFS will prohibit directed fishing for that species or species group in the specified GOA subarea, regulatory area, or district (§ 679.20(d)(1)(iii)).

The Regional Administrator has determined that the TACs for the species listed in Table 29 are necessary to account for the incidental catch of these species in other anticipated groundfish fisheries for the 2020 and 2021 fishing years.

TABLE 29—2020 AND 2021 DIRECTED FISHING CLOSURES IN THE GOA

[Amounts for incidental catch in other directed fisheries are in metric tons]

Target	Area/component/gear	Incidental catch amount and year (if amounts differ by year)
Pollock	all/offshore	not applicable[1].
Sablefish[2]	all/trawl	1,978 (2020), 3,058 (2021).
Pacific cod[3]	Western, all sectors, all gear types Central, all sectors, all gear types Eastern, inshore and offshore.	See Tables 5 and 6 of this final rule for incidental catch amounts.
Shortraker rockfish[2]	All	708.
Rougheye/blackspotted rockfish[2]	All	1,209 (2020), 1,211 (2021).
Thornyhead rockfish[2]	All	2,016.
Other rockfish	All	4,053.
Atka mackerel	All	3,000.
Big skate	All	3,208.
Longnose skate	All	2,587.
Other skates	All	875.
Sharks	All	8,184.
Octopuses	All	980.

[1] Pollock is closed to directed fishing in the GOA by the offshore component under § 679.20(a)(6)(i).

[2] Closures not applicable to participants in cooperatives conducted under the Central GOA Rockfish Program, as cooperatives are prohibited from exceeding their allocations (§ 679.7(n)(6)(viii)).

[3] NMFS prohibited directed fishing for Pacific cod in the GOA on January 1, 2020, through December 31, 2020 (84 FR 70438, December 23, 2019).

Consequently, in accordance with § 679.20(d)(1)(i), the Regional Administrator establishes the DFA for the species or species groups listed in Table 29 as zero mt. Therefore, in accordance with § 679.20(d)(1)(iii), NMFS is prohibiting directed fishing for those species, areas, gear types, and components in the GOA listed in Table 29 effective at 1200 hours, A.l.t., March 10, 2020, through 2400 hours, A.l.t., December 31, 2021.

Closures implemented under the 2019 and 2020 GOA harvest specifications for groundfish (84 FR 9416, March 14, 2019) remain effective under authority of these final 2020 and 2021 harvest specifications and until the date specified in those notices. Closures are posted at the following website under the Alaska filter for Management Areas: *https://www.fisheries.noaa.gov/rules-and-announcements/bulletins.*

While these closures are in effect, the maximum retainable amounts at § 679.20(e) and (f) apply at any time during a fishing trip. These closures to directed fishing are in addition to closures and prohibitions found at 50 CFR part 679. NMFS may implement other closures during the 2020 and 2021 fishing years as necessary for effective conservation and management.

Comments and Responses

NMFS received two letters containing two substantive comments during the public comment period for the proposed GOA groundfish harvest specifications. No changes were made to the final rule in response to the comment letters received. NMFS's response to public comments on the proposed GOA groundfish harvest specifications is provided below.

Comment 1: The allowable harvest of groundfish species in the GOA should be reduced by 50 percent to avoid exploiting the fisheries resources of the GOA and to account for the marine animals that rely on fish.

Response: Pursuant to National Standard One of the Magnuson-Stevens Act, NMFS must achieve, on a continuing basis, the optimum yield from each fishery for the U.S. fishing industry (16 U.S.C. 1851(a)(1)). Under the FMP and implementing regulations, the optimum yield for the GOA groundfish fisheries ranges from 116,000 to 800,000 mt. Based on the best available science, the Council determined that the optimum yield for 2020 and 2021 is 399,239 mt and 407,982 mt, respectively, and recommended TACs to achieve this optimum yield. NMFS agrees with this recommendation. Reducing the harvest of all groundfish by 50 percent would not achieve optimum yield for the GOA groundfish fisheries, and would not comply with National Standard One. Moreover, NMFS's primary objective in the harvest specifications process is the conservation and management of groundfish for the Nation as a whole, and the annual harvest specifications process is a key element to ensuring that Alaska fisheries are sustainably managed in a controlled and orderly manner. This process incorporates the best available scientific information from the most recent SAFE reports, which includes information on the condition of each groundfish species, as well as the condition of other ecosystem components, including marine mammals and seabirds. The recommended TACs for species and species groups in the GOA are based on the most recent SAFE report, and none of the NMFS-managed groundfish species in the GOA is overfished or subject to overfishing. In addition, NMFS has considered impacts on endangered and threatened species and marine mammals and has developed measures to address those impacts.

Comment 2: NMFS should prohibit commercial fishing, and only allow subsistence fishing, in the GOA.

Response: The groundfish harvest specifications regulations that implement the FMP govern commercial fishing for groundfish in the GOA by vessels of the United States. The groundfish harvest specifications are for commercial fishing activities. Non-commercial fishing activities, including subsistence fishing, are outside of the scope of this action.

Classification

NMFS has determined that the final harvest specifications are consistent with the FMP and with the Magnuson-Stevens Fishery Conservation and Management Act and other applicable laws.

This action is authorized under 50 CFR 679.20 and is exempt from review under Executive Order 12866.

NMFS prepared an EIS for the Alaska groundfish harvest specifications and alternative harvest strategies (see **ADDRESSES**) and made it available to the public on January 12, 2007 (72 FR 1512). On February 13, 2007, NMFS issued the ROD for the EIS. In January 2020, NMFS prepared a SIR for this action. Copies of the EIS, ROD, and annual SIRs for this action are available from NMFS (see **ADDRESSES**). The Final EIS analyzes the environmental, social, and economic consequences of the groundfish harvest specifications and alternative harvest strategies on resources in the action area. Based on the analysis in the Final EIS, NMFS concluded that the preferred Alternative (Alternative 2) provides the best balance among relevant environmental, social, and economic considerations and allows for continued management of the groundfish fisheries based on the most recent, best scientific information. The preferred alternative is a harvest strategy in which TACs are set at a level within the range of ABCs recommended by the Council's SSC; the sum of the TACs must achieve the OY specified in the FMP.

The annual SIR evaluates the need to prepare a Supplemental EIS (SEIS) for the 2020 and 2021 groundfish harvest specifications. An SEIS should be prepared if (1) the agency makes substantial changes in the proposed action that are relevant to environmental concerns, or (2) significant new circumstances or information exist relevant to environmental concerns and bearing on the proposed action or its impacts (40 CFR 1502.9(c)(1)). After reviewing the information contained in the SIR and SAFE reports, the Regional Administrator has determined that (1) approval of the 2020 and 2021 harvest specifications, which were set according to the preferred harvest strategy in the EIS, does not constitute a substantial change in the action; and (2) there are no significant new circumstances or information relevant to environmental concerns and bearing on the action or its impacts. Additionally, the 2020 and 2021 harvest specifications will result in environmental, social, and economic impacts within the scope of those analyzed and disclosed in the EIS. Therefore, an SEIS is not necessary to implement the 2020 and 2021 harvest specifications.

Section 604 of the Regulatory Flexibility Act (RFA) (5 U.S.C. 604) requires that, when an agency promulgates a final rule under 5 U.S.C. 553, after being required by that section, or any other law, to publish a general notice of proposed rulemaking, the agency shall prepare a final regulatory flexibility analysis (FRFA). The following constitutes the FRFA prepared in the final action.

Section 604 describes the required contents of a FRFA: (1) A statement of the need for, and objectives of, the rule; (2) a statement of the significant issues raised by the public comments in response to the initial regulatory flexibility analysis, a statement of the assessment of the agency of such issues, and a statement of any changes made in the proposed rule as a result of such comments; (3) the response of the agency to any comments filed by the

Chief Counsel for Advocacy of the Small Business Administration in response to the proposed rule, and a detailed statement of any change made to the proposed rule in the final rule as a result of the comments; (4) a description of and an estimate of the number of small entities to which the rule will apply or an explanation of why no such estimate is available; (5) a description of the projected reporting, recordkeeping, and other compliance requirements of the rule, including an estimate of the classes of small entities which will be subject to the requirement and the type of professional skills necessary for preparation of the report or record; and (6) a description of the steps the agency has taken to minimize the significant economic impact on small entities consistent with the stated objectives of applicable statutes, including a statement of the factual, policy, and legal reasons for selecting the alternative adopted in the final rule and why each one of the other significant alternatives to the rule considered by the agency that affect the impact on small entities was rejected.

A description of this action, its purpose, and its legal basis are contained at the beginning of the preamble to this final rule and are not repeated here.

NMFS published the proposed rule on December 3, 2019 (84 FR 66109). NMFS prepared an Initial Regulatory Flexibility Analysis (IRFA) to accompany the proposed action, and included a summary in the proposed rule. The comment period closed on January 2, 2020. No comments were received on the IRFA or on the economic impacts of the rule more generally. The Chief Counsel for Advocacy of the Small Business Administration did not file any comments on the proposed rule.

The entities directly regulated by this action include: (1) Entities operating vessels with groundfish FFPs catching FMP groundfish in Federal waters; (2) all entities operating vessels, regardless of whether they hold groundfish FFPs, catching FMP groundfish in the State-waters parallel fisheries; and (3) all entities operating vessels fishing for halibut inside three miles of the shore (whether or not they have FFPs).

For RFA purposes only, NMFS has established a small business size standard for businesses, including their affiliates, whose primary industry is commercial fishing (see 50 CFR 200.2). A business primarily engaged in commercial fishing (NAICS code 11411) is classified as a small business if it is independently owned and operated, is not dominant in its field of operation (including its affiliates), and has combined annual gross receipts not in excess of $11 million for all its affiliated operations worldwide.

Using the most recent data available (2018), the estimated number of directly regulated small entities include approximately 756 individual catcher vessel entities with gross revenues meeting small entity criteria. Of these entities, 706 used hook-and-line gear, 74 used pot gear, and 28 used trawl gear (some of these entities used more than one gear type, thus the counts of entities using the different gear types do not sum to the total number of entities above). Three individual catcher/processors met the small entity criterion; two used hook-and-line gear, and one used trawl gear. Catcher/processor gross revenues were not reported for confidentiality reasons; however, in 2018, small hook-and-line entities had average gross revenues of $390,000, small pot entities had average gross revenues of $870,000, and small trawl entities had average gross revenues of $2 million.

Some of these vessels are members of AFA inshore pollock cooperatives, of GOA rockfish cooperatives, or of Bering Sea and Aleutian Islands crab rationalization cooperatives, and, therefore, under the RFA it is the aggregate gross receipts of all participating members of the cooperative that must meet the threshold. Vessels that participate in these cooperatives are considered to be large entities within the meaning of the RFA. These relationships are accounted for, along with corporate affiliations among vessels, to the extent that they are known, in the estimated number of small entities. If affiliations exist of which NMFS is unaware, or if entities had non-fishing revenue sources, the estimates above may overstate the number of directly regulated small entities.

This action does not modify recordkeeping or reporting requirements.

NMFS considered alternative harvest strategies when choosing the preferred harvest strategy (Alternative 2) in December 2006. These included the following:

- Alternative 1: Set TACs to produce fishing mortality rates, *F,* that are equal to *maxFABC,* unless the sum of the TACs is constrained by the OY established in the FMP. This is equivalent to setting TACs to produce harvest levels equal to the maximum permissible ABCs, as constrained by OY. The term ''*maxFABC*'' refers to the maximum permissible value of *FABC* under Amendment 56 to the GOA groundfish fishery management plan. Historically, the TAC has been set at or below the ABC; therefore, this alternative represents a likely upper limit for setting the TAC within the OY and ABC limits.
- Alternative 3: For species in Tiers 1, 2, and 3, set TAC to produce *F* equal to the most recent 5-year average actual *F.* For species in Tiers 4, 5, and 6, set TAC equal to the most recent 5-year average actual catch. For stocks with a high level of scientific information, TACs would be set to produce harvest levels equal to the most recent 5-year average actual fishing mortality rates. For stocks with insufficient scientific information, TACs would be set equal to the most recent 5-year average actual catch. This alternative recognizes that for some stocks, catches may fall well below ABCs, and recent average *F* may provide a better indicator of actual *F* than *FABC* does.
- Alternative 4: First, set TACs for rockfish species in Tier 3 at *F*75%; set TACs for rockfish species in Tier 5 at *F*=0.5M; and set spatially explicit TACs for shortraker and rougheye/blackspotted rockfish in the GOA. Second, taking the rockfish TACs as calculated above, reduce all other TACs by a proportion that does not vary across species, so that the sum of all TACs, including rockfish TACs, is equal to the lower bound of the area OY (116,000 mt in the GOA). This alternative sets conservative and spatially explicit TACs for rockfish species that are long-lived and late to mature and sets conservative TACs for the other groundfish species.
- Alternative 5: (No Action) Set TACs at zero.

Alternatives 1, 3, 4, and 5 do not meet the objectives of this action, and although Alternatives 1 and 3 may have a smaller adverse economic impact on small entities than the preferred alternative, Alternatives 4 and 5 would have a significant adverse economic impact on small entities. The Council rejected these alternatives as harvest strategies in 2006, and the Secretary of Commerce did so in 2007.

Alternative 2 is the preferred alternative chosen by the Council: Set TACs that fall within the range of ABCs recommended through the Council harvest specifications process and TACs recommended by the Council. Under this scenario, *F* is set equal to a constant fraction of *maxFABC.* The recommended fractions of *maxFABC* may vary among species or stocks, based on other considerations unique to each. This is the method for determining TACs that has been used in the past.

Alternative 2 selected harvest rates that will allow fishermen to harvest stocks at the level of ABCs, unless total harvests are constrained by the upper bound of the GOA OY of 800,000 mt. The sums of ABCs in 2020 and 2021 are 465,956 mt and 471,990 mt, respectively. The sums of the TACs in 2020 and 2021 are 399,239 mt and 407,982 mt, respectively. Thus, although the sum of ABCs in each year is less than 800,000 mt, the sums of the TACs in each year are less than the sums of the ABCs.

In most cases, the Council has set TACs equal to ABCs. The divergence between aggregate TACs and aggregate ABCs reflects a variety of special species- and fishery-specific circumstances:

- Pacific cod TACs were first set equal to 70 percent in the Western GOA and 75 percent in the Central and Eastern GOA of the Pacific cod ABCs in each year to account for the GHL set by the State for its GHL Pacific cod fisheries (30 percent of the Western GOA ABC and 25 percent of the Central and Eastern GOA ABCs). In addition, the Council recommended and NMFS agrees to further reduce the 2020 and 2021 Pacific cod TACs in light of the current status of the Pacific cod stock.
- Shallow-water flatfish Western Regulatory Area and flathead sole Central and Western Regulatory Area TACs are set below ABCs. Arrowtooth flounder TACs are set below ABC in all GOA regulatory areas, except the Central GOA. Catches of these flatfish species rarely, if ever, approach the proposed ABCs or TACs. Important trawl fisheries in the GOA take halibut PSC, and are constrained by limits on the allowable halibut PSC mortality. These limits may force the closure of trawl fisheries before they have harvested the available groundfish ABC. Thus, actual harvests of groundfish in the GOA routinely fall short of some ABCs and TACs. Markets can also constrain harvests below the TACs, as has been the case with arrowtooth flounder, in the past. These TACs are set to allow for increased harvest opportunities for these targets while conserving the halibut PSC limit for use in other, more fully utilized fisheries.
- The GOA-wide Atka mackerel TAC is set below the ABC. The current estimates of survey biomass continue to be unreliable in the GOA. Therefore, the Council recommended and NMFS agrees that the Atka mackerel TAC in the GOA be set at an amount to support incidental catch in other directed fisheries.

Alternative 1 selects harvest rates that would allow fishermen to harvest stocks at the level of the ABCs, unless total harvests were constrained by the upper bound of the GOA OY of 800,000 mt. Although Alternative 1 may be consistent with the preferred alternative (Alternative 2), meet the objectives of the action, and have small entity impacts equivalent to the preferred alternative, it is not likely that Alternative 1 would result in reduced adverse economic impacts to directly-regulated small entities relative to Alternative 2. The selection of Alternative 1, which could increase all TACs up to the sum of ABCs, would not reflect the practical implications that increased TACs for some species probably would not be fully harvested. This could be due to a variety of reasons, which are addressed in the preamble to this rule and are summarized briefly here. There may be a lack of commercial or market interest in some species. Additionally, an underharvest of flatfish TACs could result due to constraints such as the fixed, and therefore constraining, PSC limits associated with the harvest of the GOA groundfish species. Finally, the TACs for two species (pollock and Pacific cod) cannot be set equal to ABC, as the TAC must be set to account for the State of Alaska's GHLs in these fisheries.

Alternative 3 selects harvest rates based on the most recent 5 years of harvest rates (for species in Tiers 1 through 3) or based on the most recent 5 years of harvests (for species in Tiers 4 through 6). This alternative is inconsistent with the objectives of this action because it does not take account of the most recent biological information for this fishery, as well as National Standard 2 of the Magnuson-Stevens Act (16 U.S.C. 1851(a)(2)). NMFS annually conducts at-sea surveys for different species, as well as statistical modeling, to estimate stock sizes and permissible harvest levels. Actual harvest rates or harvest amounts are a component of these estimates, but in and of themselves may not accurately portray stock sizes and conditions. Harvest rates are listed for each species or species group for each year in the SAFE report (see **ADDRESSES**).

Alternative 4 would lead to significantly lower harvests of all species to reduce TACs from the upper end of the OY range in the GOA to its lower end of 116,000 mt. Overall, this alternative would reduce 2020 TACs by about 71 percent, compared to the Council's recommended total 2020 TAC of 399,239 mt. This would lead to significant reductions in harvests of species by small entities. While production declines in the GOA likely would be associated with offsetting price increases in the GOA, the size of these increases is very uncertain. Price increases would still be constrained by the availability of substitutes, and there are close substitutes for GOA groundfish species available in significant quantities from the Bering Sea and Aleutian Islands management area. In addition, price increases are very unlikely to offset revenue declines from smaller production. Thus, this action would have a detrimental economic impact on small entities, compared to the preferred alternative.

Alternative 5, which sets all harvests equal to zero, may also address conservation issues, but would have a significant adverse economic impact on small entities and would be inconsistent with achieving OY on a continuing basis, as mandated by the Magnuson-Stevens Act (16 U.S.C. 1851(a)(1)).

Adverse impacts on marine mammals, or endangered or threatened species, resulting from fishing activities conducted under this rule are discussed in the Final EIS and its accompanying annual SIRs (see **ADDRESSES**).

Pursuant to 5 U.S.C. 553(d)(3), the Assistant Administrator for Fisheries, NOAA, finds good cause to waive the 30-day delay in effectiveness for this rule because delaying this rule is contrary to the public interest. The Plan Team review of the 2019 SAFE report occurred in November 2019, and based on the 2019 SAFE report the Council considered and recommended the final harvest specifications in December 2019. Accordingly, NMFS's review of the final 2020 and 2021 harvest specifications could not begin until after the December 2019 Council meeting, and after the public had time to comment on the proposed action.

For all fisheries not currently closed because the TACs established under the final 2019 and 2020 harvest specifications (84 FR 9416, March 14, 2019) were not reached, it is possible that they would be closed prior to the expiration of a 30-day delayed effectiveness period because their TACs could be reached within that period. If implemented immediately, this rule would allow these fisheries to continue fishing because some of the new TACs implemented by this rule are higher than the TACs under which they are currently fishing.

In addition, immediate effectiveness of this action is required to provide consistent management and conservation of fishery resources based on the best available scientific information. This is particularly pertinent for those species that have lower 2020 ABCs and TACs than those

established in the 2019 and 2020 harvest specifications (84 FR 9416, March 14, 2019). If implemented immediately, this rule would ensure that NMFS can properly manage those fisheries for which this rule sets lower 2020 ABCs and TACs, which are based on the most recent biological information on the condition of stocks, rather than managing species under the higher TACs set in the previous year's harvest specifications.

Certain fisheries, such as those for pollock, are intensive, fast-paced fisheries. Other fisheries, such as those for sablefish, flatfish, rockfish, Atka mackerel, skates, sharks, and octopuses, are critical as directed fisheries and as incidental catch in other fisheries. U.S. fishing vessels have demonstrated the capacity to catch the TAC allocations in many of these fisheries. If this rule allowed for a 30-day delay in effectiveness and if a TAC were reached during those 30 days, NMFS would close directed fishing or prohibit retention for the applicable species. Any delay in allocating the final TACs in these fisheries would cause confusion to the industry and potential economic harm through unnecessary discards, thus undermining the intent of this rule. Waiving the 30-day delay allows NMFS to prevent economic loss to fishermen that could otherwise occur should the 2020 TACs (set under the 2019 and 2020 harvest specifications) be reached. Determining which fisheries may close is nearly impossible because these fisheries are affected by several factors that cannot be predicted in advance, including fishing effort, weather, movement of fishery stocks, and market price. Furthermore, the closure of one fishery has a cascading effect on other fisheries by freeing-up fishing vessels, allowing them to move from closed fisheries to open ones, increasing the fishing capacity in those open fisheries, and causing them to close at an accelerated pace.

In fisheries subject to declining sideboard limits, a failure to implement the updated sideboard limits before initial season's end could deny the intended economic protection to the non-sideboarded sectors. Conversely, in fisheries with increasing sideboard limits, economic benefit could be denied to the sideboard-limited sectors.

If the final harvest specifications are not effective by March 14, 2020, which is the start of the 2020 Pacific halibut season as specified by the IPHC, the fixed gear sablefish fishery will not begin concurrently with the Pacific halibut IFQ season. This would result in confusion for the industry and economic harm from unnecessary discard of sablefish that are caught along with Pacific halibut, as both fixed gear sablefish and Pacific halibut are managed under the same IFQ program. Immediate effectiveness of the final 2020 and 2021 harvest specifications will allow the sablefish IFQ fishery to begin concurrently with the Pacific halibut IFQ season.

Finally, immediate effectiveness also would provide the fishing industry the earliest possible opportunity to plan and conduct its fishing operations with respect to new information about TACs. Therefore, NMFS finds good cause to waive the 30-day delay in effectiveness under 5 U.S.C. 553(d)(3).

Small Entity Compliance Guide

This final rule is a plain language guide to assist small entities in complying with this final rule as required by the Small Business Regulatory Enforcement Fairness Act of 1996. This final rule's primary purpose is to announce the final 2020 and 2021 harvest specifications and prohibited species bycatch allowances for the groundfish fisheries of the GOA. This action is necessary to establish harvest limits and associated management measures for groundfish during the 2020 and 2021 fishing years, and to accomplish the goals and objectives of the FMP. This action affects all fishermen who participate in the GOA fisheries. The specific OFL, ABC, TAC, and PSC amounts are provided in tables to assist the reader. NMFS will announce closures of directed fishing in the **Federal Register** and information bulletins released by the Alaska Region. Affected fishermen should keep themselves informed of such closures.

Authority: 16 U.S.C. 773 *et seq.;* 16 U.S.C. 1540 (f), 1801 *et seq.;* 16 U.S.C. 3631 *et seq.;* Pub. L. 105–277; Pub. L. 106–31; Pub. L. 106–554; Pub. L. 108–199; Pub. L. 108–447; Pub. L. 109–241; Pub. L. 109–479.

Dated: February 24, 2020.

Samuel D. Rauch, III,

Deputy Assistant Administrator for Regulatory Programs, National Marine Fisheries Service.

[FR Doc. 2020–04016 Filed 3–9–20; 8:45 am]

BILLING CODE 3510–22–P

Proposed Rules

Federal Register
Vol. 85, No. 47
Tuesday, March 10, 2020

This section of the FEDERAL REGISTER contains notices to the public of the proposed issuance of rules and regulations. The purpose of these notices is to give interested persons an opportunity to participate in the rule making prior to the adoption of the final rules.

DEPARTMENT OF HOMELAND SECURITY

Office of the Secretary

6 CFR Part 5

[Docket No. DHS–2019–0034]

Privacy Act of 1974: Implementation of Exemptions; Department of Homeland Security/ALL–038 Insider Threat Program System of Records

AGENCY: Department of Homeland Security.

ACTION: Notice of proposed rulemaking.

SUMMARY: The Department of Homeland Security is giving concurrent notice of a modified system of records pursuant to the Privacy Act of 1974 for the ''Department of Homeland Security/ALL–038 Insider Threat Program System of Records'' and this proposed rulemaking. In this proposed rulemaking, the Department proposes to exempt portions of the system of records from one or more provisions of the Privacy Act because of criminal, civil, and administrative enforcement requirements.

DATES: Comments must be received on or before April 9, 2020.

ADDRESSES: You may submit comments, identified by docket number DHS–2019–0034 by one of the following methods:

- *Federal e-Rulemaking Portal: http://www.regulations.gov.* Follow the instructions for submitting comments.
- *Fax:* 202–343–4010.
- *Mail:* Jonathan R. Cantor, Acting Chief Privacy Officer, Privacy Office, Department of Homeland Security, Washington, DC 20528–0655.

Instructions: All submissions received must include the agency name and docket number for this notice. All comments received will be posted without change to *http://www.regulations.gov,* including any personal information provided.

Docket: For access to the docket to read background documents or comments received, go to *http://www.regulations.gov.*

FOR FURTHER INFORMATION CONTACT: For questions please contact: Jonathan R. Cantor, (202–343–1717), Acting Chief Privacy Officer, Privacy Office, Department of Homeland Security, Washington, DC 20528–0655.

SUPPLEMENTARY INFORMATION:

I. Background

In accordance with the Privacy Act of 1974, 5 U.S.C. 552a, the Department of Homeland Security (DHS) proposes to modify a DHS system of records titled ''DHS/ALL–038 Insider Threat Program System of Records.''

DHS is modifying the Insider Threat Program System of Records Notice (SORN) to account for the new population affected and new types of information the program is now authorized to collect and maintain pursuant to a memorandum, *Expanding the Scope of the Department of Homeland Security Insider Threat Program,* submitted to the Secretary of Homeland Security on December 7, 2016 and approved on January 3, 2017. Originally, the Insider Threat Program (ITP) focused on the detection, prevention, and mitigation of unauthorized disclosure of classified information by DHS personnel with active security clearances. The Secretary's memorandum expands the scope of the ITP to its current breadth: Threats posed to the Department by *all* individuals who have or had access to the Department's facilities, information, equipment, networks, or systems. Unauthorized disclosure of classified information is merely one way in which this threat might manifest. Therefore, the expanded scope increases the population covered by the system to include all those with past or current access to DHS facilities, information, equipment, networks, or systems. The ITP system may include information from any DHS Component, office, program, record, or source, and includes records from information security, personnel security, and systems security for both internal and external security threats. Moreover, the Insider Threat Program system of records may cover information lawfully obtained from any United States Government Agency, DHS Component, other domestic or foreign government entity, and from a private sector entity.

Consistent with DHS's information sharing mission, information stored in the DHS/ALL–038 Insider Threat Program system of records may be shared with other DHS components that have a need to know the information to carry out their national security, law enforcement, immigration, intelligence, or other homeland security functions. In addition, DHS may share information with appropriate federal, state, local, tribal, territorial, foreign, or international government agencies consistent with the routine uses set forth in the associated system of records notice.

DHS is issuing this Notice of Proposed Rulemaking to exempt this system of records from certain provisions of the Privacy Act. The system of records notice is published elsewhere in this **Federal Register**. This newly established system will be included in DHS's inventory of record systems.

II. Privacy Act

The Privacy Act embodies fair information practice principles in a statutory framework governing the means by which Federal Government agencies collect, maintain, use, and disseminate individuals' records. The Privacy Act applies to information that is maintained in a ''system of records.'' A ''system of records'' is a group of any records under the control of an agency from which information is retrieved by the name of the individual or by some identifying number, symbol, or other identifying particular assigned to the individual. In the Privacy Act, an individual is defined to encompass U.S. citizens and lawful permanent residents. Similarly, the Judicial Redress Act (JRA) provides a statutory right to covered persons to make requests for access and amendment to covered records, as defined by the JRA, along with judicial review for denials of such requests. In addition, the JRA prohibits disclosures of covered records, except as otherwise permitted by the Privacy Act.

The Privacy Act allows government agencies to exempt certain records from the access and amendment provisions. If an agency claims an exemption, however, it must issue a Notice of Proposed Rulemaking to make clear to the public the reasons why a particular exemption is claimed.

DHS is claiming exemptions from certain requirements of the Privacy Act

for DHS/ALL–038 Insider Threat Program System of Records. Some information in this system of records relates to official DHS national security, law enforcement, and intelligence activities. These exemptions are needed to protect information relating to DHS activities from disclosure to subjects or others related to these activities. Specifically, the exemptions are required to: Preclude subjects of these activities from frustrating these processes; avoid disclosure of insider threat techniques; protect the identities and physical safety of confidential informants and law enforcement personnel; ensure DHS's ability to obtain information from third parties and other sources; protect the privacy of third parties; and safeguard classified information. Disclosure of information to the subject of the inquiry could also permit the subject to avoid detection or apprehension.

In appropriate circumstances, when compliance would not appear to interfere with or adversely affect the law enforcement purposes of this system and the overall law enforcement process, the applicable exemptions may be waived on a case by case basis.

A notice of system of records DHS/ALL–038 Insider Threat Program System of Records is also published in this issue of the **Federal Register**.

List of Subjects in 6 CFR Part 5

Freedom of information; Privacy.

For the reasons stated in the preamble, DHS proposes to amend chapter I of title 6, Code of Federal Regulations, as follows:

PART 5—DISCLOSURE OF RECORDS AND INFORMATION

■ 1. The authority citation for Part 5 continues to read as follows:

Authority: 6 U.S.C. 101 *et seq.;* Pub. L. 107–296, 116 Stat. 2135; 5 U.S.C. 301.

■ 2. In Appendix C to Part 5, add new paragraph 82 to read as follows:

Appendix C to Part 5—DHS Systems of Records Exempt From the Privacy Act

* * * * *

82. The DHS/ALL–038 Insider Threat Program System of Records consists of electronic and paper records and will be used by DHS and its components. The DHS/ALL–038 Insider Threat Program System of Records covers information held by DHS in connection with various missions and functions, including, but not limited to the enforcement of civil and criminal laws; investigations, inquiries, and proceedings there under; and national security and intelligence activities. The system of records covers information that is collected by, on behalf of, in support of, or in cooperation with DHS and its components and may contain personally identifiable information collected by other federal, state, local, tribal, foreign, or international government agencies.

The Secretary of Homeland Security, pursuant to 5 U.S.C. 552a(j)(2), has exempted this system from the following provisions of the Privacy Act: 5 U.S.C. 552a(c)(3), (c)(4); (d); (e)(1), (e)(2), (e)(3), (e)(4)(G), (e)(4)(H), (e)(4)(I), (e)(5), (e)(8), (e)(12); (f); and (g)(1). Additionally, the Secretary of Homeland Security, pursuant to 5 U.S.C. 552a(k)(1), (k)(2), and (k)(5), has exempted this system from the following provisions of the Privacy Act: 5 U.S.C. 552a(c)(3); (d); (e)(1), (e)(4)(G), (e)(4)(H), (e)(4)(I); and (f).

Where a record received from another system has been exempted in that source system under 5 U.S.C. 552a(j)(2), 5 U.S.C. 552a(k)(1), (k)(2), and (k)(5), DHS will claim the same exemptions for those records that are claimed for the original primary systems of records from which they originated and claims any additional exemptions set forth here.

Exemptions from these particular subsections are justified on a case-by-case basis and determined at the time a request is made, for the following reasons:

(a) From subsection (c)(3) and (4) (Accounting for Disclosures) because release of the accounting of disclosures could alert the subject of an investigation of an actual or potential criminal, civil, or regulatory violation to the existence of that investigation and reveal investigative interest on the part of DHS and the recipient agency. Disclosure of the accounting would therefore present a serious impediment to law enforcement efforts and efforts to preserve national security. Disclosure of the accounting would also permit the subject of a record to impede the investigation, to tamper with witnesses or evidence, and to avoid detection or apprehension, which would undermine the entire investigative process. When an investigation has been completed, information on disclosures made may continue to be exempted if the fact that an investigation occurred remains sensitive after completion.

(b) From subsection (d) (Access and Amendment to Records) because providing access or permitting amendment to the records contained in this system of records could inform the subject of an investigation of an actual or potential criminal, civil, or regulatory violation to the existence of that investigation and reveal investigative interest on the part of DHS or another agency. Access to the records could permit the subject of a record to impede the investigation, to tamper with witnesses or evidence, and to avoid detection or apprehension. Amendment of the records could interfere with ongoing investigations and law enforcement activities and would impose an unreasonable administrative burden by requiring investigations to be continually reinvestigated. In addition, permitting access and amendment to such information could disclose security-sensitive information that could be detrimental to homeland security.

(c) From subsection (e)(1) (Relevancy and Necessity of Information) because in the course of investigations into potential violations of federal law, the accuracy of information obtained or introduced occasionally may be unclear, or the information may not be strictly relevant or necessary to a specific investigation. In the interests of effective law enforcement, it is appropriate to retain all information that may aid in establishing patterns of unlawful activity.

(d) From subsection (e)(2) (Collection of Information from Individuals) because requiring that information be collected from the subject of an investigation would alert the subject to the nature or existence of the investigation, thereby interfering with that investigation and related law enforcement activities.

(e) From subsection (e)(3) (Notice to Subjects) because providing such detailed information could impede law enforcement by compromising the existence of a confidential investigation or reveal the identity of witnesses or confidential informants.

(f) From subsections (e)(4)(G), (e)(4)(H), and (e)(4)(I) (Agency Requirements) and (f) (Agency Rules), because portions of this system are exempt from the individual access provisions of subsection (d) for the reasons noted above, and therefore DHS is not required to establish requirements, rules, or procedures with respect to such access. Providing notice to individuals with respect to existence of records pertaining to them in the system of records or otherwise setting up procedures pursuant to which individuals may access and view records pertaining to themselves in the system would undermine investigative efforts and reveal the identities of witnesses, and potential witnesses, and confidential informants.

(g) From subsection (e)(5) (Collection of Information) because with the collection of information for law enforcement purposes, it is impossible to determine in advance what information is accurate, relevant, timely, and complete. Compliance with subsection (e)(5) would preclude DHS agents from using their investigative training and exercise of good judgment to both conduct and report on investigations.

(h) From subsection (e)(8) (Notice on Individuals) because compliance would interfere with DHS's ability to obtain, serve, and issue subpoenas, warrants, and other law enforcement mechanisms that may be filed under seal and could result in disclosure of investigative techniques, procedures, and evidence.

(i) From subsection (e)(12) (Matching Agreements) because requiring DHS to provide notice of a new or revised matching agreement with a non-Federal agency, if one existed, would impair DHS operations by indicating which data elements and information are valuable to DHS's analytical functions, thereby providing harmful disclosure of information to individuals who would seek to circumvent or interfere with DHS's missions.

(j) From subsection (g)(1) (Civil Remedies) to the extent that the system is exempt from other specific subsections of the Privacy Act.

Jonathan R. Cantor,

Acting Chief Privacy Officer, Department of Homeland Security.

[FR Doc. 2020–04796 Filed 3–9–20; 8:45 am]

BILLING CODE 9910–9B–P

DEPARTMENT OF AGRICULTURE

Agricultural Marketing Service

7 CFR Part 51

[Document Number AMS–SC–17–0076, SC–18–327]

U.S. Standards for Grades of Grapefruit (Texas and States Other Than Florida, California, and Arizona), and U.S. Standards for Grades of Oranges (Texas and States Other Than Florida, California, and Arizona)

AGENCY: Agricultural Marketing Service, USDA.

ACTION: Proposed rule.

SUMMARY: The Agricultural Marketing Service (AMS) proposes to revise the U.S. Standards for Grades of Grapefruit (Texas and States other than Florida, California, and Arizona) and the U.S. Standards for Grades of Oranges (Texas and States other than Florida, California, and Arizona). The revision would convert the Acceptable Quality Level (AQL) tables from showing the acceptable number of allowable defective fruit in each grade to showing the percentage of defects permitted in each grade; revise the minimum sample size to 25 fruit; update size classifications; remove references to Temple oranges from the orange standards for grade; and more closely align terminology in both grade standards with Florida and California citrus standards.

DATES: Comments must be submitted on or before May 11, 2020.

ADDRESSES: Interested persons are invited to submit written comments to the USDA, Specialty Crops Inspection Division, 100 Riverside Parkway, Suite 101, Fredericksburg, VA 22406; fax: (540) 361–1199; or at *www.regulations.gov.* Comments should reference the date and page number of this issue of the **Federal Register** and will be made available for public inspection in the above office during regular business hours. Comments can also be viewed as submitted, including any personal information you provide, on the *www.regulations.gov* website.

FOR FURTHER INFORMATION CONTACT: Olivia L. Banks at the address above, or by phone (540) 361–1120; fax (540) 361–1199; or, email *olivia.banks@usda.gov.* Copies of the proposed U.S. Standards for Grades of Grapefruit (Texas and States other than Florida, California, and Arizona) and U.S. Standards for Grades of Oranges (Texas and States other than Florida, California, and Arizona) may be viewed at *http://www.regulations.gov.* Copies of the current U.S. Standards for Grades of Grapefruit (Texas and States other than Florida, California, and Arizona) and U.S. Standards for Grades of Oranges (Texas and States other than Florida, California, and Arizona) are available on the AMS website at *https://www.ams.usda.gov/grades-standards/fruits.*

SUPPLEMENTARY INFORMATION: The proposed changes would convert the AQL tables in the U.S. Standards for Grades of Grapefruit (Texas and States other than Florida, California, and Arizona) and the U.S. Standards for Grades of Oranges (Texas and States other than Florida, California, and Arizona) from showing the acceptable number of allowable defective fruit in each grade to showing the percentage of defects permitted in each grade, revise minimum sample size to 25 fruit, update size classifications, remove reference to Temple orange in the orange standards for grade and more closely align terminology in both grade standards with Florida and California citrus standards. These revisions also affect the grade requirements under the marketing order (Order) Oranges and Grapefruit Grown in Lower Rio Grande Valley in Texas, 7 CFR part 906, issued under the Agricultural Marketing Agreement Act of 1937 (7 U.S.C. 601–674) and applicable imports.

Executive Orders 12866, 13771, and 13563

This proposed rule is not expected to be an Executive Order 13771 regulatory action because it is not significant under Executive Order 12866. See the Office of Management and Budget's memorandum, ''Interim Guidance Implementing Section 2 of the Executive Order of January 30, 2017 titled 'Reducing Regulation and Controlling Regulatory Costs''' (February 2, 2017). Executive Orders 12866 and 13563 direct agencies to assess all costs and benefits of available regulatory alternatives and if regulation is necessary, to select regulatory approaches that maximize net benefits (including potential economic, environmental, public health and safety effects, distributive impacts, and equity). Executive Order 13563 emphasizes the importance of quantifying both costs and benefits, reducing costs, harmonizing rules, and promoting flexibility.

Executive Order 13175

This proposed rule has been reviewed in accordance with the requirements of Executive Order 13175, Consultation and Coordination with Indian Tribal Governments. The review reveals that this regulation would not have substantial and direct effects on Tribal governments nor significant Tribal implications.

Executive Order 12988

This proposed rule has been reviewed under Executive Order 12988, Civil Justice Reform. It is not intended to have retroactive effect. There are no administrative procedures that must be exhausted prior to any judicial challenge to the provisions of this rule.

Background

AMS continuously reviews fruit and vegetable grade standards to assess their effectiveness in the industry and to modernize language. On September 20, 2016, AMS received a request from the Texas Valley Citrus Committee (TVCC) to modernize the language of and clarify the Texas citrus standards by removing outdated AQL tables. The standards were last revised in September 2003. AMS worked closely with the TVCC throughout the development of the proposed revisions, soliciting their comments and suggestions about the standards through discussion drafts that outlined the conversion from AQL tables to a defined percentage of defects permitted in each grade. The proposed percentages correspond to those currently allowed in the AQL tables and more closely align with California and Florida orange and grapefruit standards.

Additional proposed revisions to the Texas grapefruit standard include adding size 64 to the size classifications to align with sizes in the Order; changing the minimum sample size from 33 to 25 fruit; and changing the scoring basis for defects from a 70-size fruit to a 4⅛-inch grapefruit. Proposed revisions to the Texas orange standard also include adding size 163 to the size classifications to align with sizes in the Order; changing the minimum sample size from 50 to 25 fruit; changing the scoring basis for defects from a 200-size fruit to a 2⅞-inch orange; and removing Temple oranges from the standard.

AMS also conducted a grapefruit shape survey with the TVCC to identify areas of the standards for revision in

order to more closely align the Texas citrus standards with those of Florida and California. On May 23, 2018, AMS met with the TVCC to review the proposed revisions. These efforts culminated with the TVCC submitting a petition to AMS on June 12, 2018 to revise the U.S. standards for Texas oranges and grapefruit as discussed and approved at the May 2018 meeting.

This rule proposes several changes in the U.S. standards. The chart below shows the requirements of the current standards, the proposed changes, and the rationale for each change. The first chart covers the U.S. Standards for Grades of Grapefruit (Texas and States other than Florida, California, and Arizona) and the second chart covers the U.S. Standards for Grades of Oranges (Texas and States other than Florida, California, and Arizona).

The proposed revisions more closely align terminology related to defects and grade requirements with the Florida citrus grade standards as requested by the TVCC and align the standards with current industry practices.

Regulatory Flexibility Analysis

Pursuant to requirements set forth in the Regulatory Flexibility Act (RFA) (5 U.S.C. 601–612), AMS has considered the economic impact of this proposed rule on small entities. Accordingly, AMS has prepared this initial regulatory flexibility analysis.

The purpose of the RFA is to fit regulatory actions to the scale of businesses subject to such actions in order that small businesses will not be unduly or disproportionately burdened.

This rule will revise the U.S. Standards for Grades of Grapefruit (Texas and States other than Florida, California, and Arizona) and U.S. Standards for Grades of Oranges (Texas and States other than Florida, California, and Arizona) that were issued under the Agricultural Marketing Act of 1946. Standards issued under the 1946 Act are voluntary.

There are approximately 170 producers of grapefruit and oranges in the production area and 14 handlers subject to regulation under the Order. Small agricultural producers are defined by the Small Business Administration (SBA) as those having annual receipts less than $1,000,000, and small agricultural service firms are defined as those whose annual receipts are less than $30,000,000 (13 CFR 121.201).

According to Texas Valley Citrus Committee (TVCC) data, the average price for Texas citrus during the 2017–18 season prices ranged from $11.10 to $33.35 per carton. The average price was $22.23 per carton ($11.10 plus $33.35 equals $44.45, divided by 2 equals $22.23 per carton) and total shipments were 7.9 million cartons. Using the average price, shipment information, and number of handlers, and assuming a normal distribution, the majority of handlers would have average annual receipts of less than $30,000,000 ($22.23 per carton times 7.9 million cartons equals $175.6 million, divided by 14 equals $12.5 million per handler).

In addition, based on National Agricultural Statistics Service information, the average Free on Board (f.o.b.) price for Texas citrus during the 2018–19 season was approximately $35.05 per carton. Using the average f.o.b. price, shipment information, and the number of producers, and assuming a normal distribution, the majority of producers would have annual receipts of $1.6 million, which is more than $1,000,000 ($35.05 per carton times 7.9 million cartons equals $276.9 million, divided by 170 equals $1.6 million per producer). Thus, the majority of producers of Texas citrus may be classified as large entities, while the majority of handlers of Texas citrus may be classified as small entities.

This proposed rule would convert the AQL Tables from showing the acceptable number of allowable defective fruit in each grade to a percentage of defects permitted in each grade, revise minimum sample size to 25 fruit, update size classifications, remove references to Temple orange from the orange standards for grade, and more closely align terminology in both standards for grade with Florida and California citrus standards.

This proposed action would make the standards more consistent with current marketing trends and practices. This proposed action will not impose any additional reporting or recordkeeping requirements on small or large orange or grapefruit producers or handlers. USDA has not identified any Federal rules that duplicate, overlap, or conflict with this rule. However, there are marketing programs that regulate the handling of oranges and grapefruit under 7 CFR part 906. Oranges and grapefruit subject to the Order must meet certain requirements set forth in the grade standards for oranges and grapefruit.

A 60-day comment period is provided for interested persons to submit comments on the proposed revised grade standards. Copies of the proposed revised standards are available at *http://www.regulations.gov.* After the 60-day comment period, AMS will move forward in accordance with 7 CFR 36.3(a).

List of Subjects in 7 CFR Part 51

Food grades and standards, Fruits, Nuts, Reporting and recordkeeping requirements, Vegetables.

For reasons set forth in the preamble, 7 CFR part 51 is amended as follows:

PART 51—FRESH FRUITS, VEGETABLES AND OTHER PRODUCTS (INSPECTION, CERTIFICATION, AND STANDARDS)

■ 1. The authority citation for part 51 continues to read as follows:

Authority: 7 U.S.C. 1621–1627.

■ 2. Revise the subpart heading ''Subpart–United States Standards for Grades of Grapefruit (Texas and States Other than Florida, California, and Arizona)'' to read as follows:

Application of Tolerances

■ 3. Revise § 51.620 to read as follows:

§ 51.620 U.S. Fancy.

''U.S. Fancy'' consists of grapefruit which meet the following requirements:

(a) Basic requirements:

(1) *Discoloration:* Not more than one-tenth of the surface, in the aggregate, may be affected by discoloration. (See § 51.638.);

(2) Firm;

(3) Mature;

(4) Similar varietal characteristics;

(5) Smooth texture;

(6) Well formed; and

(7) Well colored.

(b) Free from:

(1) Ammoniation;

(2) Bruises;

(3) Buckskin;

(4) Decay;

(5) Growth cracks;

(6) Scab;

(7) Skin breakdown;

(8) Sprayburn;

(9) Unhealed skin breaks; and

(10) Wormy fruit.

(c) Free from injury caused by:

(1) Green spots;

(2) Hail;

(3) Oil spots;

(4) Scale;

(5) Scars; and

(6) Thorn scratches.

(d) Free from damage caused by:

(1) Dryness or mushy condition;

(2) Insects;

(3) Sprouting;

(4) Sunburn; and

(5) Other means.

(e) For tolerances see § 51.628.

■ 4. Revise § 51.621 to read as follows:

§ 51.621 U.S. No. 1.

''U.S. No. 1'' consists of grapefruit which meet the following requirements:

(a) Basic requirements:
(1) *Discoloration:* Not more than one-half of the surface, in the aggregate, may be affected by discoloration. (See § 51.638.);
(2) Fairly smooth texture;
(3) Fairly well colored;
(4) Fairly well formed;
(5) Firm;
(6) Mature; and
(7) Similar varietal characteristics.
(b) Free from:
(1) Bruises;
(2) Caked melanose;
(3) Decay;
(4) Growth cracks;
(5) Sprayburn;
(6) Unhealed skin breaks; and
(7) Wormy fruit.
(c) Free from damage caused by:
(1) Ammoniation;
(2) Buckskin;
(3) Caked melanose;
(4) Dryness or mushy condition;
(5) Green spots;
(6) Hail;
(7) Oil spots;
(8) Scab;
(9) Scale;
(10) Scars;
(11) Skin breakdown;
(12) Sprayburn;
(13) Sprouting;
(14) Sunburn;
(15) Thorn scratches; and
(16) Other means.
(d) For tolerances see § 51.628.

■ 5. Revise § 51.623 to read as follows:

§ 51.623 U.S. No. 1 Bronze.

The requirements for this grade are the same as for U.S. No. 1 except that all fruit must show some discoloration and at least 10 percent, by count, of the fruit shall have more than one-half of their surface, in the aggregate, affected by discoloration. The predominating discoloration on each of these fruits shall be of rust mite type. For tolerances see § 51.628.

■ 6. Revise § 51.624 to read as follows:

§ 51.624 U.S. Combination.

''U.S. Combination'' consists of a combination of U.S. No. 1 and U.S. No. 2 grapefruit: *Provided,* That at least 55 percent, by count, meet the requirements of U.S. No. 1 grade for defects, *And provided further,* That the lot meets the basic requirement for discoloration as specified in the U.S. No. 2 grade. For tolerances see § 51.628.

■ 7. Revise § 51.625 to read as follows:

§ 51.625 U.S. No. 2.

''U.S. No. 2'' consists of grapefruit which meet the following requirements:
(a) Basic requirements:
(1) *Discoloration:* Not more than two-thirds of the surface, in the aggregate, may be affected by discoloration. (See § 51.638.);
(2) Fairly firm;
(3) Mature;
(4) Not more than slightly misshapen;
(5) Not more than slightly rough texture;
(6) Slightly colored; and
(7) Similar varietal characteristics.
(b) Free from:
(1) Bruises;
(2) Decay;
(3) Growth cracks;
(4) Unhealed skin breaks; and
(5) Wormy fruit.
(c) Free from serious damaged caused by:
(1) Ammoniation;
(2) Buckskin;
(3) Caked melanose;
(4) Dryness or mushy condition;
(5) Green spots;
(6) Hail;
(7) Oil spots;
(8) Scab;
(9) Scale;
(10) Scars;
(11) Skin breakdown;
(12) Sprayburn;
(13) Sprouting;
(14) Sunburn;
(15) Thorn scratches; and
(16) Other means.
(d) For tolerances see § 51.628.

■ 8. Revise § 51.626 to read as follows:

§ 51.626 U.S. No. 2 Russet.

The requirements for this grade are the same as for U.S. No. 2 except that at least 10 percent of the fruit shall have more than two-thirds of their surface, in the aggregate, affected by any type of discoloration. For tolerances see § 51.628.

■ 9. Revise § 51.627 to read as follows:

§ 51.627 U.S. No. 3.

''U.S. No. 3'' consists of grapefruit which meet the following requirements:
(a) Basic requirements:
(1) Mature;
(2) May be misshapen;
(3) May be slightly spongy;
(4) May have rough texture;
(5) May be poorly colored. Not more than 25 percent of the surface may be of a solid dark green color;
(6) Not seriously lumpy or cracked; and
(7) Similar varietal characteristics.
(b) Free from:
(1) Decay;
(2) Unhealed skin breaks; and
(3) Wormy fruit.
(c) Free from very serious damage caused by:
(1) Ammoniation;
(2) Buckskin;
(3) Caked melanose;
(4) Dryness or mushy condition;
(5) Green spots;
(6) Hail;
(7) Oil spots;
(8) Scab;
(9) Scale;
(10) Scars;
(11) Skin breakdown;
(12) Sprayburn;
(13) Sprouting;
(14) Sunburn;
(15) Thorn scratches; and
(16) Other means.
(d) For tolerances see § 51.628.

■ 10. Revise § 51.628 to read as follows:

§ 51.628 Tolerances.

In order to allow for variations incident to proper grading and handling in each of the foregoing grades, the following tolerances, by count, based on a minimum 25 count sample, are provided as specified. No tolerance shall apply to wormy fruit.

(a) Defects—(1) *U.S. Fancy, U.S. No. 1, U.S. No. 1 Bright, U.S. No. 1 Bronze, U.S. No. 2, and U.S. No. 2 Russet*—(i) *For defects at shipping point.*[1] Not more than 10 percent of the fruit in any lot may fail to meet the requirements of the specified grade: *Provided,* That included in this amount not more than 5 percent shall be allowed for defects causing very serious damage, including in this latter amount not more than 1 percent for decay.

(ii) For defects en route or at destination. Not more than 12 percent of the fruit in any lot may fail to meet the requirements of the specified grade: *Provided,* That included in this amount not more than the following percentages shall be allowed for defects listed:
(A) 10 percent for fruit having permanent defects; or
(B) 7 percent for defects causing very serious damage, including therein not more than 5 percent for very serious damage by permanent defects and not more than 3 percent for decay.

(2) *U.S. Combination*—(i) *For defects at shipping point.*[1] Not more than 10 percent of the fruit in any lot may fail to meet the requirements of the U.S. No. 2 grade: *Provided,* That included in this amount not more than 5 percent shall be allowed for defects causing very serious damage, included in this latter amount not more than 1 percent for decay.

(ii) *For defects en route or at destination.* Not more than 12 percent the fruit in any lot may fail to meet the requirements of the U.S. No. 2 grade: *Provided,* That included in this amount not more than the following percentages shall be allowed for defects listed:
(A) 10 percent for fruit having permanent defects; or
(B) 7 percent for defects causing very serious damage, including therein not

more than 5 percent for very serious damage by permanent defects and not more than 3 percent for decay.

(iii) *For defects at shipping point*[1] *and en route or at destination.* No part of any tolerance shall be allowed to reduce, for the lot as a whole, the 55 percent of U.S. No. 1 fruit required in the U.S. Combination grade, but individual samples may have not more than 15 percent less than the required percentage for the grade: *Provided,* That the entire lot averages within the percentage required.

(3) *U.S. No.3*—(i) *For defects at shipping point.*[1] Not more than 10 percent of the fruit in any lot may fail to meet the requirements of the grade: *Provided,* That included in this amount not more than 1 percent for decay.

(ii) *For defects en route or at destination.* Not more than 12 percent of the fruit in any lot may fail to meet the requirements of the grade: *Provided,* That included in this amount not more than the following percentages shall be allowed for defects listed:

(A) 10 percent for fruit having permanent defects; or

(B) 3 percent for decay.

(b) *Discoloration*—(1) *U.S. No. 1, U.S. No. 1 Bright, U.S. Combination, and U.S. No. 2.* Not more than 10 percent of the fruit in any lot may fail to meet the requirements relating to discoloration as specified in each grade; No sample may have more than 20 percent of the fruit with excessive discoloration: *Provided,* That the entire lot averages within the percentage specified.

(2) *U.S. No. 1 Bronze.* At least 10 percent of the fruit shall have more than one-half of the surface, in the aggregate, affected by discoloration, and no part of any tolerance shall be allowed to reduce this percentage: *Provided,* That the entire lot averages within the percentage specified. No tolerance is provided for fruit showing no discoloration.

(3) *U.S. No. 2 Russet.* At least 10 percent of the fruit shall have more than two-thirds of the surface, in the aggregate, affected by discoloration, and no part of any tolerance shall be allowed to reduce this percentage: *Provided,* That the entire lot averages within the percentage specified.

[1] Shipping point, as used in these standards, means the point of origin of the shipment in the producing area or at port of loading for ship stores or overseas shipment, or, in the case of shipments from outside the continental United States, the port of entry into the United States.

■ 11. Revise the undesignated center heading before § 51.629 ''SAMPLE FOR GRADE OR SIZE DETERMINATION'' to read as follows:

Application of Tolerances

■ 12. Revise § 51.629 to read as follows:

§ 51.629 Application of tolerances.

Individual samples are subject to the following limitations, unless otherwise specified in § 51.628. Individual samples shall have not more than one and one-half times a specified tolerance of 10 percent or more, and not more than double a specified tolerance of less than 10 percent: *Provided,* That at least one decayed fruit may be permitted in any sample: *And provided further,* That the averages for the entire lot are within the tolerances specified for the grade.

■ 13. Revise § 51.630 to read as follows:

§ 51.630 Standard pack.

(a) Fruits shall be fairly uniform in size, unless specified as uniform in size. When packed in approved containers, fruit shall be arranged according to approved and recognized methods.

(b) ''Fairly uniform in size'' means that not more than 10 percent of fruit in any lot, and not more than double that amount in any sample, are outside the ranges of diameters given in Table 1 to this section:

TABLE 1 TO § 51.630—7/10 BUSHEL CARTON

Pack size/ number of grapefruit	Diameter in inches	
	Minimum	Maximum
18	4–15/16	5–9/16
23	4–5/16	5
27	4–2/16	4–12/16
32	3–15/16	4–8/16
36	3–13/16	4–5/16
40	3–10/16	4–2/16
48	3–9/16	3–14/16
56	3–5/16	3–10/16
64	3	3–8/16

(c) ''Uniform in size'' means that not more than 10 percent of fruit in any lot, and not more than double that amount in any sample, may vary more than the following amounts:

(1) 32 size and smaller—not more than six-sixteenths inch in diameter; and

(2) 27 size and larger—not more than nine-sixteenths inch in diameter.

(d) In order to allow for variations, other than sizing, incident to proper packing, not more than 5 percent of the packages in any lot may fail to meet the requirements of standard pack.

■ 14. Revise § 51.637 to read as follows:

§ 51.637 Injury.

Injury means any specific defect described in Table 1 to § 51.652; or an equally objectionable variation of any one of these defects, any other defect, or any combination of defects, which slightly detracts from the appearance, or the edible or marketing quality of the fruit.

■ 15. Revise § 51.642 to read as follows:

§ 51.642 Damage.

Damage means any specific defect described in Table 1 to § 51.652; or an equally objectionable variation of any one of these defects, any other defect, or any combination of defects, which materially detracts from the appearance, or the edible or marketing quality of the fruit.

■ 16. Revise § 51.646 to read as follows:

§ 51.646 Serious damage.

Serious damage means any specific defect described in Table 1 to § 51.652; or an equally objectionable variation of any one of these defects, any other defect, or any combination of defects, which seriously detracts from the appearance, or the edible or marketing quality of the fruit.

■ 17. Revise § 51.650 to read as follows:

§ 51.650 Very serious damage.

Very serious damage means any specific defect described in Table 1 to § 51.652; or an equally objectionable variation of any one of these defects, any other defect, or any combination of defects, which very seriously detracts from the appearance, or the edible or marketing quality of the fruit.

■ 18. Revise § 51.652 to read as follows:

§ 51.652 Classification of defects.

All references to area or aggregate area, or length in this standard are based on a grapefruit 4⅛ inches in diameter, allowing proportionately greater areas on larger fruit and lesser areas on smaller fruit.

TABLE 1 TO § 51.652

Factor	Injury	Damage	Serious damage	Very serious damage
Ammoniation		Not occurring as light speck type	Scars are cracked or dark and aggregating more than a circle ¾ inch in diameter.	Aggregating more than 25 percent of the surface.

TABLE 1 TO § 51.652—Continued

Factor	Injury	Damage	Serious damage	Very serious damage
Buckskin		Aggregating more than a circle 1¼ inches in diameter.	Aggregating more than 25 percent of the surface.	Aggregating more than 50 percent of the surface.
Caked melanose			Aggregating more than a circle 1 inch in diameter.	Aggregating more than 25 percent of the surface.
Dryness or mushy condition.		Affecting all segments more than ¼ inch at stem end, or the equivalent of this amount, by volume, when occurring in other portions of the fruit.	Affecting all segments more than ½ inch at stem end, or the equivalent of this amount, by volume, when occurring in other portions of the fruit.	Affecting all segments more than ¾ inch at stem end, or the equivalent of this amount, by volume, when occurring in other portions of the fruit.
Green spots or oil spots.	More than slightly affecting appearance.	Aggregating more than a circle 1 inch in diameter.	Aggregating more than a circle 1½ inches in diameter.	
Hail	Not well healed, or aggregating more than a circle ⅜ inch in diameter.	Not well healed, or aggregating more than a circle ½ inch in diameter.	Not well healed, or aggregating more than a circle ⅝ inch in diameter.	Not well healed, or aggregating more than a circle 1 inch in diameter.
Scab		Materially detracts from the shape or texture, or aggregating more than a circle ¾ inch in diameter.	Seriously detracts from the shape or texture, or aggregating more than a circle 1 inch in diameter.	Aggregating more than 25 percent of the surface.
Scale	More than a few adjacent to the ''button'' at the stem end, or more than 6 scattered on other portions of the fruit.	Blotch aggregating more than a circle ¾ inch in diameter, or occurring as a ring more than a circle 1¼ inches in diameter.	Blotch aggregating more than a circle 1 inch in diameter, or occurring as a ring more than a circle 1½ inches in diameter.	Aggregating more than 25 percent of the surface.
Scars	Depressed, not smooth, or detracts from appearance more than the amount of discoloration permitted in the grade.	Very deep or very rough aggregating more than a circle ½ inch in diameter; deep or rough aggregating more than 1 inch in diameter; slightly rough or of slight depth aggregating more than 10 percent of surface.	Very deep or very rough aggregating more than a circle 1 inch in diameter; deep or rough aggregating more than 5 percent of the fruit surface; slight depth or slightly rough aggregating more than 15 percent of surface.	Very deep or very rough or unsightly that appearance is very seriously affected.
Skin Breakdown		Aggregating more than a circle ⅜ inch in diameter.	Aggregating more than a circle ⅝ inch in diameter.	Aggregating more than a circle 1¼ inches in diameter.
Sprayburn			Hard or aggregating more than a circle 1¼ inches in diameter.	Aggregating more than 25 percent of the surface.
Sprouting		More than 6 seeds are sprouted, including not more than 1 sprout extending to the rind, remainder average not over ¼ inch in length.	More than 6 seeds are sprouted, including not more than 2 sprouts extending to the rind, remainder average not over ½ inch in length.	More than 6 seeds are sprouted, including not more than 3 sprouts extending to the rind, remainder average not over ¾ inch in length.
Sunburn		Skin is flattened, dry, darkened, or hard, aggregating more than 25 percent of surface.	Skin is hard, fruit is decidedly one-sided, aggregating more than one-third of surface.	Aggregating more than 50 percent of fruit surface.
Thorn scratches	Not well healed, or more unsightly than discoloration permitted in the grade.	Not well healed, hard concentrated thorn injury aggregating more than a circle ¾ inch in diameter, or slight scratches aggregating more than a circle 1 inch in diameter.	Not well healed, hard concentrated thorn injury aggregating more than a circle ⅞ inch in diameter, or slight scratches aggregating more than a circle 1¼ inches in diameter.	Aggregating more than 25 percent of the surface.

■ 19. Revise the heading of Subpart—United States Standards for Grades of Oranges (Texas and States Other than Florida, California, and Arizona) to read as follows:

Application of Tolerances

■ 20. Revise § 51.681 to read as follows:

§ 51.681 U.S. Fancy.

''U.S. Fancy'' consists of oranges which meet the following requirements:

(a) Basic requirements:

(1) Discoloration: Not more than one-tenth of the surface, in the aggregate, may be affected by discoloration. (See § 51.700.);

(2) Firm;

(3) Mature;

(4) Similar varietal characteristics;

(5) Smooth texture;

(6) Well colored; and

(7) Well formed.

(b) Free from:

(1) Ammoniation;

(2) Bruises;

(3) Buckskin;

(4) Caked melanose;

(5) Creasing;

(6) Decay;

(7) Growth cracks;

(8) Scab;

(9) Skin breakdown;

(10) Sprayburn;

(11) Undeveloped segments;

(12) Unhealed skin breaks; and

(13) Wormy fruit.

(c) Free from injury caused by:

(1) Green spots;

(2) Hail;

(3) Oil spots;

(4) Rough, wide or protruding navels;

(5) Scale;

(6) Scars;

(7) Split navels; and

(8) Thorn scratches.

(d) Free from damage caused by:

(1) Dirt or other foreign material;

(2) Disease;

(3) Dryness or mushy condition;

(4) Insects;

(5) Sunburn; and

(6) Other means.

(e) For tolerances see § 51.689.

■ 21. Revise § 51.682 to read as follows:

§ 51.682 U.S. No. 1.

''U.S. No. 1'' consists of oranges which meet the following requirements:

(a) Basic requirements:

(1) Color:

(i) Early and midseason varieties shall be fairly well colored.

(ii) For Valencia and other late varieties, not less than 50 percent, by count, shall be fairly well colored and the remainder reasonably well colored.

(2) Discoloration: Not more than one-third of the surface, in the aggregate, may be affected by discoloration. (See § 51.700.);

(3) Firm;

(4) Fairly smooth texture;

(5) Mature;

(6) Similar varietal characteristics; and

(7) Well formed.

(b) Free from:
(1) Bruises;
(2) Caked melanose;
(3) Decay;
(4) Growth cracks;
(5) Sprayburn;
(6) Undeveloped segments;
(7) Unhealed skin breaks; and
(8) Wormy fruit.
(c) Free from damage caused by:
(1) Ammoniation;
(2) Buckskin;
(3) Creasing;
(4) Dirt or other foreign material;
(5) Disease;
(6) Dryness or mushy condition;
(7) Green spots;
(8) Hail;
(9) Insects;
(10) Oil spots;
(11) Scab;
(12) Scale;
(13) Scars;
(14) Skin breakdown;
(15) Split, rough or protruding navels;
(16) Sunburn;
(17) Thorn scratches; and
(18) Other means.
(d) For tolerances see § 51.689.

■ 22. Revise § 51.684 to read as follows:

§ 51.684 U.S. No. 1 Bronze.

The requirements for this grade are the same as for U.S. No. 1 except that all fruit must show some discoloration and at least 10 percent, by count, of the fruit shall have more than one-third of their surface, in the aggregate, affected by discoloration. The predominating discoloration on these fruits shall be of rust mite type. For tolerances see § 51.689.

■ 23. Revise § 51.685 to read as follows:

§ 51.685 U.S. Combination.

''U.S. Combination'' consists of a combination of U.S. No. 1 and U.S. No. 2 oranges: *Provided,* That at least 55 percent, by count, meet the requirements of U.S. No. 1 grade for defects, *And provided further,* That the lot meets the basic requirement for discoloration as specified in the U.S. No. 2 grade. For tolerances see § 51.689.

■ 24. Revise § 51.686 to read as follows:

§ 51.686 U.S. No. 2.

''U.S. No. 2'' consists of oranges which meet the following requirements:
(a) Basic requirements:
(1) Discoloration: Not more than one-half of the surface, in the aggregate, may be affected by discoloration. (See § 51.700.);
(2) Fairly firm;
(3) Mature;
(4) Not more than slightly misshapen;
(5) Not more than slightly rough texture;
(6) Reasonably well colored; and
(7) Similar varietal characteristics.
(b) Free from:
(1) Bruises;
(2) Decay;
(3) Growth cracks;
(4) Unhealed skin breaks; and
(5) Wormy fruit.
(c) Free from serious damaged caused by:
(1) Ammoniation;
(2) Buckskin;
(3) Caked melanose;
(4) Creasing;
(5) Dirt or other foreign material;
(6) Disease;
(7) Dryness or mushy condition;
(8) Green spots;
(9) Hail;
(10) Insects;
(11) Oil spots;
(12) Scab;
(13) Scale;
(14) Scars;
(15) Skin breakdown;
(16) Split, rough or protruding navels;
(17) Sprayburn;
(18) Sunburn;
(19) Thorn scratches; and
(20) Other means.
(d) For tolerances see § 51.689.

■ 25. Revise § 51.687 to read as follows:

§ 51.687 U.S. No. 2 Russet.

The requirements for this grade are the same as for U.S. No. 2 except that at least 10 percent by count of the fruit shall have more than one-half of their surface, in the aggregate, affected by any type of discoloration. For tolerances see § 51.689.

■ 26. Revise § 51.688 to read as follows:

§ 51.688 U.S. No. 3.

''U.S. No. 3'' consists of oranges which meet the following requirements:
(a) Basic requirements:
(1) Mature;
(2) May be misshapen;
(3) May be poorly colored. Not more than 25 percent of the surface may be of a solid dark green color;
(4) May be slightly spongy;
(5) May have rough texture;
(6) Not seriously lumpy or cracked; and
(7) Similar varietal characteristics.
(b) Free from:
(1) Decay;
(2) Unhealed skin breaks; and
(3) Wormy fruit.
(c) Free from very serious damage caused by other means.
(d) For tolerances see § 51.689.

■ 27. Revise § 51.689 to read as follows.

§ 51.689 Tolerances.

In order to allow for variations incident to proper grading and handling in each of the foregoing grades, the following tolerances, by count, based on a minimum 25 count sample, are provided as specified. No tolerance shall apply to wormy fruit.

(a) *Defects*—(1) *U.S. Fancy, U.S. No. 1, U.S. No. 1 Bright, U.S. No. 1 Bronze, U.S. No. 2, and U.S. No. 2 Russet Grades*—(i) *For defects at shipping point.*[1] Not more than 10 percent of the fruit in any lot may fail to meet the requirements of the specified grade: *Provided,* That included in this amount not more than 5 percent shall be allowed for defects causing very serious damage, including in this latter amount not more than 1 percent for decay.

(ii) *For defects en route or at destination.* Not more than 12 percent of the fruit in any lot may fail to meet the requirements of the specified grade: *Provided,* That included in this amount not more than the following percentages shall be allowed for defects listed:

(A) 10 percent for fruit having permanent defects; or

(B) 7 percent for defects causing very serious damage, including therein not more than 5 percent for very serious damage by permanent defects and not more than 3 percent for decay.

(2) *U.S. Combination*—(i) *For defects at shipping point.*[1] Not more than 10 percent of the fruit in any lot may fail to meet the requirements of the U.S. No. 2 grade: *Provided,* That included in this amount not more than 5 percent shall be allowed for defects causing very serious damage, including in this latter amount not more than 1 percent for decay.

(ii) *For defects en route or at destination.* Not more than 12 percent of the fruit in any lot may fail to meet the requirements of the U.S. No. 2 grade: *Provided,* That included in this amount not more than the following percentages shall be allowed for defects listed:

(A) 10 percent for fruit having permanent defects; or

(B) 7 percent for defects causing very serious damage, including therein not more than 5 percent for very serious damage by permanent defects and not more than 3 percent for decay.

(iii) *For defects at shipping point*[1] *and en route or at destination.* No part of any tolerance shall be allowed to reduce for the lot as a whole, the 55 percent of U.S. No. 1 fruit required in the U.S. Combination grade, but individual samples may have not more than 15 percent less than the required percentage for the grade: *Provided,* That the entire lot averages within the percentage required.

(3) *U.S. No. 3*—(i) *For defects at shipping point.*[1] Not more than 10 percent of the fruit in any lot may fail to meet the requirements of the grade:

Provided, That included in this amount not more than 1 percent for decay.

(ii) *For defects en route or at destination.* Not more than 12 percent of the fruit in any lot may fail to meet the requirements of the grade: *Provided,* That included in this amount not more than the following percentages shall be allowed for defects listed:

(A) 10 percent for fruit having permanent defects; or

(B) 3 percent for decay.

(b) *Discoloration*—(1) *U.S. No. 1, U.S. No. 1 Bright, U.S. Combination, and U.S. No. 2.* Not more than 10 percent of the fruit in any lot may fail to meet the requirements relating to discoloration as specified in each grade. No sample may have more than 20 percent of the fruit with excessive discoloration: *Provided,* That the entire lot averages within the percentage specified.

(2) *U.S. No. 1 Bronze.* At least 10 percent of the fruit shall have more than one-third of the surface, in the aggregate, affected by discoloration, and no part of any tolerance shall be allowed to reduce this percentage. No sample may have less than 5 percent of the fruit with required discoloration: *Provided,* That the entire lot averages within the percentage specified. No tolerance shall apply to fruit showing no discoloration.

(3) *U.S. No. 2 Russet.* At least 10 percent of the fruit shall have more than one-half of the surface, in the aggregate, affected by discoloration, and no part of any tolerance shall be allowed to reduce this percentage. No sample may have less than 5 percent of the fruit with the required discoloration: *Provided,* That the entire lot averages within the percentage specified.

[1] Shipping point, as used in these standards, means the point of origin of the shipment in the producing area or at port of loading for ship stores or overseas shipment, or, in the case of shipments from outside the continental United States, the port of entry into the United States.

■ 28. Revise undesignated center heading ''SAMPLE FOR GRADE OR SIZE DETERMINATION'' before § 51.690 to read as follows:

APPLICATION OF TOLERANCES

■ 29. Revise § 51.690 to read as follows:

§ 51.690 Application of tolerances.

Individual samples are subject to the following limitations, unless otherwise specified in § 51.689. Individual samples shall have not more than one and one-half times a specified tolerance of 10 percent or more, and not more than double a specified tolerance of less than 10 percent: *Provided,* That at least one decayed may be permitted in any sample: *And provided further,* That the averages for the entire lot are within the tolerances specified for the grade.

■ 30. Revise § 51.691 to read as follows:

§ 51.691 Standard pack.

(a) Fruit shall be fairly uniform in size. When packed in approved containers, fruit shall be arranged according to approved and recognized methods.

(b) ''Fairly uniform in size'' means that not more than 10 percent of fruit in any lot, and not more than double that amount in any sample, are outside the ranges of diameters given in Table 1:

TABLE 1 TO § 51.691—7/10 BUSHEL CARTON

Pack size/number of oranges	Diameter in inches	
	Minimum	Maximum
24	3 12/16	5 1/16
32	3 6/16	4 9/16
36	3 4/16	4 6/16
40	3 2/16	4 4/16
48	2 15/16	4
56	2 13/16	3 13/16
64	2 11/16	3 10/16
72	2 9/16	3 8/16
88	2 8/16	3 4/16
113	2 7/16	3
138	2 6/16	2 12/16
163	2 3/16	2 8/16

(c) In order to allow for variations, other than sizing, incident to proper packing, not more than 5 percent of the packages in any lot may fail to meet the requirements of standard pack.

■ 31. Revise § 51.699 to read as follows:

§ 51.699 Injury.

Injury means any specific defect described in Table 1 to § 51.713; or an equally objectionable variation of any one of these defects, any other defect, or any combination of defects, which slightly detracts from the appearance, or the edible or marketing quality of the fruit.

■ 32. Revise § 51.702 to read as follows:

§ 51.702 Damage.

Damage means any specific defect described in Table 1 to § 51.713; or an equally objectionable variation of any one of these defects, any other defect, or any combination of defects, which materially detracts from the appearance, or the edible or marketing quality of the fruit.

■ 33. Revise § 51.708 to read as follows:

§ 51.708 Serious damage.

Serious damage means any specific defect described in Table 1 to § 51.713; or an equally objectionable variation of any one of these defects, any other defect, or any combination of defects, which seriously detracts from the appearance, or the edible or marketing quality of the fruit.

■ 34. Revise § 51.711 to read as follows:

§ 51.711 Very serious damage.

Very serious damage means any specific defect described in Table 1 to § 51.713; or an equally objectionable variation of any one of these defects, any other defect, or any combination of defects, which very seriously detracts from the appearance, or the edible or marketing quality of the fruit.

■ 35. Revise § 51.713 to read as follows:

§ 51.713 Classification of Defects.

All references to area or aggregate area, or length in this standard are based on an orange 2 7/8 inches in diameter, allowing proportionately greater areas on larger fruit and lesser areas on smaller fruit.

TABLE 1 TO § 51.713

Factor	Injury	Damage	Serious damage	Very serious damage
Ammoniation		Not occurring as light speck type	Scars are cracked or dark and aggregating more than a circle 3/4 inch in diameter or light colored and aggregating more than a circle 1–1/4 inches in diameter.	Aggregating more than 25 percent of the surface.
Buckskin		Aggregating more than a circle 1 inch in diameter.	Aggregating more than 25 percent of the surface.	Aggregating more than 50 percent of the surface.
Caked melanose			Aggregating more than a circle 3/4 inch in diameter.	Aggregating more than 25 percent of the surface.
Creasing		Materially weakens the skin, or extends over more than one-third of the surface.	Seriously weakens the skin, or extends over more than one-half of the surface.	Very seriously weakens the skin, or is distributed over practically the entire surface.

TABLE 1 TO § 51.713—Continued

Factor	Injury	Damage	Serious damage	Very serious damage
Dryness or mushy condition.	.....	Affecting all segments more than ¼ inch at stem end, or the equivalent of this amount, by volume, when occurring in other portions of the fruit.	Affecting all segments more than ½ inch at stem end, or the equivalent of this amount, by volume, when occurring in other portions of the fruit.	Affecting all segments more than ¾ inch at stem end, or the equivalent of this amount, by volume, when occurring in other portions of the fruit.
Green spots or oil spots.	More than slightly affecting appearance.	Aggregating more than a circle ⅞ inch in diameter.	Aggregating more than a circle 1–¼ inches in diameter.	
Hail	Not well healed, or aggregating more than a circle 1/4 inch in diameter.	Not well healed, or aggregating more than a circle 3/8 inch in diameter.	Not well healed, or aggregating more than a circle 1/2 inch in diameter.	Not well healed, or aggregating more than a circle 3/4 inch in diameter.
Scab	.....	Materially detracts from the shape or texture, or aggregating more than a circle ⅝ inch in diameter.	Seriously detracts from the shape or texture, or aggregating more than a circle ¾ inch in diameter.	Aggregating more than 25 percent of the surface.
Scale	More than a few adjacent to the ''button'' at the stem end, or more than 6 scattered on other portions of the fruit.	Aggregating more than a circle ⅝ inch in diameter.	Aggregating more than a circle ¾ inch in diameter.	Aggregating more than 25 percent of the surface.
Scars	Depressed, not smooth, or detracts from appearance more than the amount of discoloration permitted in the grade.	Deep, rough or hard aggregating more than a circle ¼ inch in diameter; slightly rough with slight depth aggregating more than a circle ⅞ inch in diameter; smooth or fairly smooth with slight depth aggregating more than a circle 1–¼ inches in diameter.	Deep, rough aggregating more than a circle ½ inch in diameter; slightly rough with slight depth aggregating more than a circle 1–¼ inches in diameter.	Deep, rough or unsightly that appearance is very seriously affected.
Skin breakdown ...	.....	Aggregating more than a circle ¼ inch in diameter.	Aggregating more than a circle ⅝ inch in diameter.	Aggregating more than 25 percent of the surface.
Sunburn	.....	Skin is flattened, dry, darkened or hard, aggregating more than 25 percent of the surface.	Affecting more than one-third of the surface, hard, decidedly one-sided, or light brown and aggregating more than a circle 1–¼ inches in diameter.	Aggregating more than 50 percent of the surface.
Sprayburn	.....	.....	Hard, or aggregating more than a circle 1–¼ inches in diameter.	Aggregating more than 25 percent of the surface
Split, rough or protruding navels.	Split is unhealed; navel protrudes beyond general contour; opening is so wide, growth so folded and ridged that it detracts noticeably from appearance.	Split is unhealed, or more than ¼ inch in length, or more than 3 well healed splits, or navel protrudes beyond the general contour, and opening is so wide, folded or ridged that it detracts materially from appearance.	Split is unhealed, or more than ½ inch in length, or aggregate length of all splits exceed 1 inch, or navel protrudes beyond general contour, and opening is so wide, folded and ridged that it seriously detracts from appearance.	Split is unhealed or fruit is seriously weakened.
Thorn scratches ..	Not slight, not well healed, or more unsightly than discoloration permitted in the grade.	Not well healed, or hard concentrated thorn injury aggregating more than a circle ⅝ inch in diameter.	Not well healed, or hard concentrated thorn injury aggregating more than a circle ¾ inch in diameter.	Aggregating more than 25 percent of the surface.

Dated: February 27, 2020.

Bruce Summers,

Administrator, Agricultural Marketing Service.

[FR Doc. 2020–04368 Filed 3–9–20; 8:45 am]

BILLING CODE 3410–02–P

DEPARTMENT OF HEALTH AND HUMAN SERVICES

Food and Drug Administration

21 CFR Parts 1100, 1107, and 1114

[Docket No. FDA–2019–N–2854]

RIN 0910–AH44

Premarket Tobacco Product Applications and Recordkeeping Requirements; Reopening of the Comment Period

AGENCY: Food and Drug Administration, HHS.

ACTION: Proposed rule; reopening of the comment period.

SUMMARY: The Food and Drug Administration (FDA or the Agency) is reopening the comment period only for the agency information collection activity associated with proposed rulemaking entitled ''Premarket Tobacco Product Applications and Recordkeeping Requirements,'' which appeared in the **Federal Register** of September 25, 2019. FDA is not reopening the comment period associated with any other aspects of the proposed rulemaking. The Agency is taking this action to seek comment on an additional proposed form to collect information that would be required under certain provisions of the proposed rule. This proposed form would allow for easier identification of each new tobacco product contained in a grouped submission of premarket tobacco product applications (PMTAs). FDA is reopening the comment period only on the proposed agency information collection activity to allow interested persons additional time to submit comments on this form.

DATES: FDA is reopening the comment period on the agency information collection activity contained in the proposed rule published in the **Federal Register** of September 25, 2019 (84 FR 50566). Submit either electronic or written comments by April 9, 2020.

ADDRESSES: To ensure that comments on the information collection are received, OMB recommends that written comments be faxed to the Office of Information and Regulatory Affairs, OMB, Attn: FDA Desk Officer, Fax: 202–395–7285, or emailed to *oira_submission@omb.eop.gov.* All comments should be identified with the OMB control number 0910–0879 and title ''Premarket Tobacco Product Applications and Recordkeeping

Requirements.'' Also include the FDA docket number found in brackets in the heading of this document.

Docket: For access to the docket to read background documents or the electronic and written/paper comments received, go to *https://www.regulations.gov* and insert the docket number, found in brackets in the heading of this document, into the ''Search'' box and follow the prompts and/or go to the Dockets Management Staff, 5630 Fishers Lane, Rm. 1061, Rockville, MD 20852.

FOR FURTHER INFORMATION CONTACT: JonnaLynn Capezzuto, Office of Operations, Food and Drug Administration, Three White Flint North, 10A–12M, 11601 Landsdown St., North Bethesda, MD 20852, 301–796–3794, *PRAStaff@fda.hhs.gov.*

SUPPLEMENTARY INFORMATION: In the **Federal Register** of September 25, 2019 (84 FR 50566), FDA published a proposed rule that included an agency information collection assessment with a 60-day comment period to request comments on proposed requirements related to PMTA reporting and recordkeeping. In the **Federal Register** of November 26, 2019 (84 FR 65044), FDA published a document reopening the comment period on the proposed rule for an addition 20 days in response to multiple requests from commenters and the comment period closed on December 16, 2019.

FDA is reopening the comment period for the agency information collection activity associated with the proposed rulemaking for a period of 30 days, until April 9, 2020, to allow comment on an additional proposed form. The Agency believes that a 30-day extension allows adequate time for interested persons to submit comments without significantly delaying rulemaking.

FDA has included an additional proposed form (Form FDA 4057b) in the docket that will assist industry and FDA in identifying the products that are the subject of a submission where an applicant groups multiple PMTAs into a single submission (referred to as a bundled submission or a grouped submission). FDA has previously stated that one approach to submitting PMTAs could be to group applications for products that are both from the same manufacturer or domestic importer and in the same product category and subcategory into a single submission. FDA discusses bundled submissions in the proposed rule (84 FR 50566 at 50578) and notes that FDA intends to consider information on each tobacco product as a separate, individual PMTA. The form would assist applicants in providing the unique identifying information for each product in a grouped submission of PMTAs that would be required by table 1 to 21 CFR 1114.7(c)(3)(iii) of the proposed rule (84 FR 50566 at 50637). By having the identifying information for products contained in a submission be more clearly organized, FDA will be able to more efficiently process and review the applications contained in a grouped submission.

FDA is revising table 22 from the Paperwork Reduction Act section contained in the proposed rule (84 FR 50566 at 50627) to add the associated burden for the additional proposed form. We estimate that 24 respondents will complete Form FDA 4057b for a total of 96 hours. Based on the Form FDA 4057 for use when submitting PMTA single and bundled submissions, FDA estimated that 24 respondents will submit PMTA bundles per year. Form FDA 4057b would be created once for each submission containing more than one PMTA. We assume the submitter could include from 2 to 2,000 products in each Form FDA 4057b. Entering data for up to 2,000 rows can take approximately 4 hours on average per Form FDA 4057b for manual data entry. If the data entry is automated, it could be performed more quickly. Assuming 4 hours per Form FDA 4057b for 24 applications, we estimate a total burden of 96 hours for this new activity. FDA does not believe the recordkeeping burden will be affected by the addition of the form.

The new total burden for the collections of information in this rulemaking are estimated to be 22,610 reporting hours and 52 recordkeeping hours for a total of 22,662 hours. In compliance with the Paperwork Reduction Act of 1995 (44 U.S.C. 3407(d)), the Agency has submitted the information collection provisions of this proposed rule to OMB for review. These requirements will not be effective until FDA obtains OMB approval. FDA will publish a notice concerning OMB approval of these requirements in the **Federal Register**.

Dated: March 4, 2020.

Lowell J. Schiller,

Principal Associate Commissioner for Policy.

[FR Doc. 2020–04828 Filed 3–9–20; 8:45 am]

BILLING CODE 4164–01–P

DEPARTMENT OF HOMELAND SECURITY

Coast Guard

33 CFR Part 165

[Docket Number USCG–2020–0144

RIN 1625–AA00

Safety Zone; Cocos Lagoon, Merizo, GU

AGENCY: Coast Guard, DHS.

ACTION: Notice of proposed rulemaking.

SUMMARY: The Coast Guard is proposing to establish a temporary safety zone for navigable waters within Cocos Lagoon. This safety zone will encompass the designated swim course for the Cocos Crossing swim event in the waters of Cocos Lagoon, Merizo, Guam. We invite your comments on this proposed rulemaking.

DATES: Comments and related material must be received by the Coast Guard on or before April 9, 2020.

ADDRESSES: You may submit comments identified by docket number USCG–2020–0144 using the Federal eRulemaking Portal at *https://www.regulations.gov.* See the ''Public Participation and Request for Comments'' portion of the **SUPPLEMENTARY INFORMATION** section for further instructions on submitting comments.

FOR FURTHER INFORMATION CONTACT: If you have questions about this proposed rulemaking, call or email Chief Petty Officer Robert Davis, Sector Guam, U.S. Coast Guard, by telephone at (671) 355–4866, or email at *WWMGuam@uscg.mil.*

SUPPLEMENTARY INFORMATION:

I. Table of Abbreviations

CFR Code of Federal Regulations
DHS Department of Homeland Security
FR Federal Register
NPRM Notice of proposed rulemaking
§ Section
U.S.C. United States Code

II. Background, Purpose, and Legal Basis

The Cocos Crossing swim event is a recurring annual event that occurs on the Sunday before Memorial Day. We have established safety zones for this swim event in past years.

The purpose of this rule is to ensure the safety of the participants and the navigable waters in the safety zone before, during, and after the scheduled swim event. The Coast Guard is proposing this rulemaking under authority in 46 U.S.C. 70034 (previously 33 U.S.C. 1231).

III. Discussion of Proposed Rule

The Captain of the Port (COTP) is proposing to establish a safety zone from 6:00 a.m. to 1:00 p.m. on Sunday May 24, 2020 for the Cocos Crossing swimming event. This safety zone is necessary to protect all persons and vessels participating in this marine event from potential safety hazards associated with vessel traffic in the area. Race participants, chase boats, and organizers of the event will be exempt from the safety zone. Entry of persons or vessels into this safety zone is prohibited unless authorized by the COTP. The regulatory text we are proposing appears at the end of this document.

IV. Regulatory Analyses

We developed this proposed rule after considering numerous statutes and Executive orders related to rulemaking. Below we summarize our analyses based on a number of these statutes and Executive Orders, and we discuss First Amendment rights of protestors.

A. Regulatory Planning and Review

Executive Orders 12866 and 13563 direct agencies to assess the costs and benefits of available regulatory alternatives and, if regulation is necessary, to select regulatory approaches that maximize net benefits. Executive Order 13771 directs agencies to control regulatory costs through a budgeting process. This NPRM has not been designated a ''significant regulatory action,'' under Executive Order 12866. Accordingly, the NPRM has not been reviewed by the Office of Management and Budget (OMB), and pursuant to OMB guidance it is exempt from the requirements of Executive Order 13771.

This regulatory action determination is based on the size, location, duration, and time-of-day of the safety zone. Vessel traffic will be able to safely transit around this safety zone, which will impact a small designated area of the Cocos Lagoon for approximately 7 hours. Moreover, the Coast Guard will issue a Broadcast Notice to Mariners via VHF–FM marine channel 16 about the zone, and the rule allows vessels to seek permission to enter the zone.

B. Impact on Small Entities

The Regulatory Flexibility Act of 1980, 5 U.S.C. 601–612, as amended, requires Federal agencies to consider the potential impact of regulations on small entities during rulemaking. The term ''small entities'' comprises small businesses, not-for-profit organizations that are independently owned and operated and are not dominant in their fields, and governmental jurisdictions with populations of less than 50,000. The Coast Guard certifies under 5 U.S.C. 605(b) that this proposed rule would not have a significant economic impact on a substantial number of small entities.

While some owners or operators of vessels intending to transit the safety zone may be small entities, for the reasons stated in section IV.A above, this proposed rule would not have a significant economic impact on any vessel owner or operator.

If you think that your business, organization, or governmental jurisdiction qualifies as a small entity and that this rule would have a significant economic impact on it, please submit a comment (see **ADDRESSES**) explaining why you think it qualifies and how and to what degree this rule would economically affect it.

Under section 213(a) of the Small Business Regulatory Enforcement Fairness Act of 1996 (Pub. L. 104–121), we want to assist small entities in understanding this proposed rule. If the rule would affect your small business, organization, or governmental jurisdiction and you have questions concerning its provisions or options for compliance, please call or email the person listed in the **FOR FURTHER INFORMATION CONTACT** section. The Coast Guard will not retaliate against small entities that question or complain about this proposed rule or any policy or action of the Coast Guard.

C. Collection of Information

This proposed rule would not call for a new collection of information under the Paperwork Reduction Act of 1995 (44 U.S.C. 3501–3520).

D. Federalism and Indian Tribal Governments

A rule has implications for federalism under Executive Order 13132 (Federalism), if it has a substantial direct effect on the States, on the relationship between the National Government and the States, or on the distribution of power and responsibilities among the various levels of government. We have analyzed this proposed rule under that Order and have determined that it is consistent with the fundamental federalism principles and preemption requirements described in Executive Order 13132.

Also, this proposed rule does not have tribal implications under Executive Order 13175 (Consultation and Coordination with Indian Tribal Governments) because it would not have a substantial direct effect on one or more Indian tribes, on the relationship between the Federal Government and Indian tribes, or on the distribution of power and responsibilities between the Federal Government and Indian tribes. If you believe this proposed rule has implications for federalism or Indian tribes, please call or email the person listed in the **FOR FURTHER INFORMATION CONTACT** section.

E. Unfunded Mandates Reform Act

The Unfunded Mandates Reform Act of 1995 (2 U.S.C. 1531–1538) requires Federal agencies to assess the effects of their discretionary regulatory actions. In particular, the Act addresses actions that may result in the expenditure by a State, local, or tribal government, in the aggregate, or by the private sector of $100,000,000 (adjusted for inflation) or more in any one year. Though this proposed rule would not result in such an expenditure, we do discuss the effects of this rule elsewhere in this preamble.

F. Environment

We have analyzed this proposed rule under Department of Homeland Security Directive 023–01, Rev. 1, associated implementing instructions, and Environmental Planning COMDTINST 5090.1 (series), which guide the Coast Guard in complying with the National Environmental Policy Act of 1969 (42 U.S.C. 4321–4370f), and have made a preliminary determination that this action is one of a category of actions that do not individually or cumulatively have a significant effect on the human environment. This proposed rule involves This proposed rule involves a safety zone lasting approximately 7 hours that would prohibit entry within 100-yards for swim participants. Normally such actions are categorically excluded from further review under paragraph L60(a) of Appendix A, Table 1 of DHS Instruction Manual 023–01–001–01, Rev. 1. A preliminary Record of Environmental Consideration supporting this determination is available in the docket. For instructions on locating the docket, see the **ADDRESSES** section of this preamble. We seek any comments or information that may lead to the discovery of a significant environmental impact from this proposed rule.

G. Protest Activities

The Coast Guard respects the First Amendment rights of protesters. Protesters are asked to call or email the person listed in the **FOR FURTHER INFORMATION CONTACT** section to coordinate protest activities so that your message can be received without

jeopardizing the safety or security of people, places, or vessels.

V. Public Participation and Request for Comments

We view public participation as essential to effective rulemaking, and will consider all comments and material received during the comment period. Your comment can help shape the outcome of this rulemaking. If you submit a comment, please include the docket number for this rulemaking, indicate the specific section of this document to which each comment applies, and provide a reason for each suggestion or recommendation.

We encourage you to submit comments through the Federal eRulemaking Portal at *https://www.regulations.gov.* If your material cannot be submitted using *https://www.regulations.gov,* call or email the person in the **FOR FURTHER INFORMATION CONTACT** section of this document for alternate instructions.

We accept anonymous comments. All comments received will be posted without change to *https://www.regulations.gov* and will include any personal information you have provided. For more about privacy and submissions in response to this document, see DHS's Correspondence System of Records notice (84 FR 48645, September 26, 2018).

Documents mentioned in this NPRM as being available in the docket, and all public comments, will be in our online docket at *https://www.regulations.gov* and can be viewed by following that website's instructions. Additionally, if you go to the online docket and sign up for email alerts, you will be notified when comments are posted or a final rule is published.

List of Subjects in 33 CFR Part 165

Harbors, Marine safety, Navigation (water), Reporting and recordkeeping requirements, Security measures, Waterways.

For the reasons discussed in the preamble, the Coast Guard is proposing to amend 33 CFR part 165 as follows:

PART 165—SAFETY ZONE; COCOS LAGOON, MERIZO, GU

■ 1. The authority citation for part 165 continues to read as follows:

Authority: 46 U.S.C. 70034; 46 U.S.C. 70051; 33 CFR 1.05–1, 6.04–1, 6.04–6, and 160.5; Department of Homeland Security Delegation No. 0170.1.

■ 2. Add § 165.T14–0144 to read as follows:

§ 165. T14–0144 Safety Zone; Cocos Lagoon, Merizo, GU.

(a) *Location.* The following area, within the Guam Captain of the Port (COTP) Zone (See 33 CFR 3.70–15), all navigable waters within a 100-yard radius of race participants in Cocos Lagoon, Merizo, Guam. Race participants, chase boats and organizers of the event will be exempt from the safety zone.

(b) *Effective dates.* This rule is effective from 6 a.m. to 1 p.m. on May 24, 2020.

(c) *Regulations.* (1) In accordance with the general regulations in section § 165.23, entry into, transiting, or anchoring within this safety zone is prohibited unless authorized by the COTP or a designated on-scene representative.

(2) This safety zone is closed to all persons and vessel traffic, except as may be permitted by the COTP or a designated on-scene representative.

(3) The ''on-scene representative'' of the COTP is any Coast Guard commissioned, warrant, or petty officer who has been designated by the COTP to act on his or her behalf.

(4) Persons and Vessel operators desiring to enter or operate within the safety zone must contact the COTP or an on-scene representative to obtain permission to do so. The COTP or an on-scene representative may be contacted via VHF Channel 16 or at telephone number (671) 355–4821. Vessel operators given permission to enter or operate in the safety zone must comply with all directions given to them by the COTP or an on-scene representative.

(d) *Waiver.* The COTP may waive any of the requirements of this rule for any person, vessel, or class of vessel upon finding that application of the safety zone is unnecessary or impractical for the purpose of maritime security.

(e) *Penalties.* Vessels or persons violating this rule are subject to the penalties set forth in 46 U.S.C. 70036 (previously codified in 33 U.S.C. 1232) and 46 U.S.C. 70052 (previously codified in 50 U.S.C. 192).

Dated: March 5, 2020.

Christopher M. Chase,

Captain, U.S. Coast Guard, Captain of the Port, Guam.

[FR Doc. 2020–04806 Filed 3–9–20; 8:45 am]

BILLING CODE 9110–04–P

FEDERAL COMMUNICATIONS COMMISSION

47 CFR Part 9

[FRS 16536]

Wireless E911 Location Accuracy Requirements

AGENCY: Federal Communications Commission.

ACTION: Petition for reconsideration.

SUMMARY: The Boulder Emergency Telephone Service Authority, on December 26, 2019, filed a Petition for Reconsideration in the Commission's Wireless E911 Location Accuracy rulemaking proceeding.

DATES: Oppositions to the Petition must be filed on or before March 25, 2020. Replies to the opposition must be filed on or before April 6, 2020.

ADDRESSES: Federal Communications Commission, 445 12th Street SW, Washington, DC 20554.

FOR FURTHER INFORMATION CONTACT: John Evanoff, Public Safety and Homeland Security Bureau, Policy and Licensing Division, at *john.evanoff@fcc.gov,* or (202) 418–0848.

SUPPLEMENTARY INFORMATION: This is a summary of the Commission's document, released on February 26, 2020. The full text of this document is available for viewing and copying at the FCC Reference Information Center, 445 12th Street SW, Room CY–A257, Washington, DC 20554. The full text of this document is also available online via the Commission's Electronic Comment Filing System at: *http://apps.fcc.gov/ecfs/.* The Commission will not send a Congressional Review Act (CRA) submission to Congress or the Government Accountability Office pursuant to the CRA, 5 U.S.C. 801(a)(1)(A), because no rules are being adopted by the Commission.

Subject. Wireless E911 Location Accuracy Requirements, Report and Order, FCC 19–124, published at 85 FR 2660, January 16, 2020, in PS Docket No 07–114. This document is being published pursuant to 47 CFR 1.429(e). *See also* 47 CFR 1.4(b)(1) and 1.429(f), (g).

Number of Petitions filed: 1.

Federal Communications Commission.

Marlene Dortch,

Secretary, Office of the Secretary.

[FR Doc. 2020–04554 Filed 3–9–20; 8:45 am]

BILLING CODE 6712–01–P

DEPARTMENT OF THE INTERIOR

Fish and Wildlife Service

50 CFR Part 17

[Docket No. FWS–R4–ES–2019–0073; FXES11130900000–189–FF0932000]

RIN 1018–BB83

Endangered and Threatened Wildlife and Plants; Removing *Lepanthes eltoroensis* From the Federal List of Endangered and Threatened Plants

AGENCY: Fish and Wildlife Service, Interior.

ACTION: Proposed rule.

SUMMARY: We, the U.S. Fish and Wildlife Service, propose to remove *Lepanthes eltoroensis* (no common name), an orchid species from Puerto Rico, from the Federal List of Endangered and Threatened Plants (List) (*i.e.,* to ''delist'' the species), due to recovery. This proposed action is based on a thorough review of the best available scientific and commercial data, which indicates that the threats to the species have been eliminated or reduced to the point that the species no longer meets the definition of an endangered or threatened species under the Endangered Species Act of 1973, as amended (Act). We also announce the availability of a draft post-delisting monitoring (PDM) plan. We seek information, data, and comments from the public regarding this proposal and the draft PDM plan.

DATES: We will accept comments received or postmarked on or before May 11, 2020. Comments submitted electronically using the Federal eRulemaking Portal (see **ADDRESSES**, below) must be received by 11:59 p.m. Eastern Time on the closing date. We must receive requests for a public hearing, in writing, at the address shown in **FOR FURTHER INFORMATION CONTACT** by April 24, 2020.

ADDRESSES: *Written comments:* You may submit comments on this proposed rule and the draft PDM plan by one of the following methods:

(1) *Electronically:* Go to the Federal eRulemaking Portal: *http://www.regulations.gov.* In the Search box, enter FWS–R4–ES–2019–0073, which is the docket number for this rulemaking. Then, click on the Search button. On the resulting page, in the Search panel on the left side of the screen, under the Document Type heading, click on the Proposed Rule box to locate this document. You may submit a comment by clicking on ''Comment Now!''

(2) *By hard copy:* Submit by U.S. mail or hand-delivery to: Public Comments Processing, Attn: FWS–R4–ES–2019–0073, U.S. Fish and Wildlife Service, MS: JAO/1N, 5275 Leesburg Pike, Falls Church, VA 22041–3803.

We request that you send comments only by the methods described above. We will post all comments on *http://www.regulations.gov.* This generally means that we will post any personal information you provide us (see *Public Comments,* below, for more information).

Document availability: This proposed rule, the draft PDM plan, and supporting documents (including the species status assessment (SSA) report and references cited) are available at *http://www.regulations.gov* under Docket No. FWS–R4–ES–2019–0073 or at the Caribbean Ecological Services Field Office website at *https://www.fws.gov/southeast/caribbean/.*

FOR FURTHER INFORMATION CONTACT: Edwin Muñiz, Field Supervisor, U.S. Fish and Wildlife Service, Caribbean Ecological Services Field Office. Physical address: Road 301, Km. 5.1, Boquerón, Puerto Rico 00622. Mailing address: P.O. Box 49, Boquerón, Puerto Rico 00622. Telephone: (787) 851–7297. If you use a telecommunications device for the deaf (TDD), please call the Federal Relay Service at (800) 877– 8339 for TTY assistance 24 hours a day, 7 days a week.

SUPPLEMENTARY INFORMATION:

Information Requested

Public Comments

We intend that any final action resulting from this proposed rule will be based on the best scientific and commercial data available and be as accurate and as effective as possible. The proposed rule serves as the notice of initiation and, if finalized, the final determination fulfills the requirements of a 5-year review. Therefore, we request comments or information from other concerned governmental agencies, the scientific community, industry, or any other interested parties concerning this proposed rule. Because we will consider all comments and information we receive during the comment period, our final determination may differ from this proposal. We particularly seek new information not already included in the species status assessment report concerning:

(1) Information concerning the biology and ecology of *Lepanthes eltoroensis*;

(2) New information on the historical and current status, range, distribution, and population size of *L. eltoroensis*;

(3) Relevant data concerning any threats (or lack thereof) to *L. eltoroensis,* particularly any data on the possible effects of climate to this orchid as it relates to habitat;

(4) The extent of protection and management that would be provided by the Commonwealth of Puerto Rico to *L. eltoroensis* as a delisted species;

(5) Current or planned activities within the geographic range of *L. eltoroensis* that may negatively impact or benefit the species;

(6) The draft PDM plan and the methods and approach detailed in it; and

(7) Other relevant information the public believes we have not considered.

Please include sufficient information with your submission (such as scientific journal articles or other publications) to allow us to verify any scientific or commercial information you include. All comments submitted electronically via *http://www.regulations.gov* will be presented on the website in their entirety as submitted. For comments submitted via hard copy, we will post your entire comment—including your personal identifying information—on *http://www.regulations.gov.* You may request at the top of your document that we withhold personal information such as your street address, phone number, or email address from public review; however, we cannot guarantee that we will be able to do so.

Comments and materials we receive, as well as supporting documentation we used in preparing this proposed rule, will be available for public inspection on *http://www.regulations.gov,* or by appointment, during normal business hours, at the U.S. Fish and Wildlife Service, Caribbean Ecological Services Field Office (see **FOR FURTHER INFORMATION CONTACT**).

Please note that submissions merely stating support for, or opposition to, the action under consideration without providing supporting information, although noted, will not be considered in making a determination, as section 4(b)(1)(A) of the Act (16 U.S.C. 1531 *et seq.*) directs that determinations as to whether any species is an endangered or threatened species must be made ''solely on the basis of the best scientific and commercial data available.''

Public Hearing

Section 4(b)(5) of the Act provides for a public hearing on this proposal, if requested. Requests must be received within 45 days after the date of publication of this proposed rule in the **Federal Register** (see **DATES**). Such requests must be sent to the address shown in **FOR FURTHER INFORMATION**

CONTACT. We will schedule a public hearing on this proposal, if requested, and announce the date, time, and place of the hearing, as well as how to obtain reasonable accommodations, in the **Federal Register** and local newspapers at least 15 days before the hearing.

Peer Review

In accordance with our joint policy on peer review published in the **Federal Register** on July 1, 1994 (59 FR 34270), and the Service's August 22, 2016, Director's Memo on the Peer Review Process, we sought the expert opinions of five appropriate and independent specialists regarding the species status assessment report for *Lepanthes eltoroensis.* These peer reviewers have expertise in *L. eltoroensis* or similar epiphytic orchid species' biology or habitat, or climate change. We received comments from one of the five peer reviewers. The purpose of peer review is to ensure that our decisions are based on scientifically sound data, assumptions, and analyses. The peer reviewer comments will be available along with other public comments in the docket for this proposed rule.

Species Status Assessment Report

A team of Service biologists, in consultation with other species experts, prepared a species status assessment (SSA) report for *Lepanthes eltoroensis.* The SSA report represents a compilation of the best scientific and commercial data available concerning the status of the species, including the impacts of past, present, and future factors (both negative and beneficial) affecting the species. As stated above, we solicited independent peer review of the SSA report by five individuals with expertise in *L. eltoroensis* or similar epiphytic orchid species' biology or habitat, or climate change. The final SSA, which supports this proposed rule, was revised, as appropriate, in response to the comments and suggestions received from our peer reviewers. The SSA report and other materials relating to this proposal can be found on the Service's Southeast Region website at *https://www.fws.gov/southeast/* and at *http://www.regulations.gov* under Docket No. FWS–R4–ES–2019–0073.

Background

Previous Federal Actions

Lepanthes eltorensis (no common name) was originally recommended for Federal listing by the Smithsonian Institution (Ayensu and DeFilipps 1978). In 1980, we included the species among the plants being considered as endangered or threatened by the Service (45 FR 82480), and subsequently included it in the annual Candidate Notice of Review from 1983 through 1989, determining that listing *L. eltorensis* was warranted but precluded by other pending listing actions of a higher priority. We published a final rule in the **Federal Register** listing *L. eltoroensis* as an endangered species on November 29, 1991 (56 FR 60933). On July 15, 1996, we published the *L. eltoroensis* Recovery Plan (USFWS 1996). We completed a 5-year status review on August 24, 2015 (USFWS 2015). Although the review did not recommend we reclassify or delist this orchid, it did indicate that the species was showing substantial improvement and a reduced level of threats.

Species Information

A thorough review of the taxonomy, life history, and ecology of *Lepanthes eltoroensis* is presented in the SSA report (Service 2019, entire), which is available at *http://www.regulations.gov* under Docket No. FWS–R4–ES–2019–0073, and summarized in this proposed rule.

Species Description

Lepanthes eltoroensis is a member of a large genus of more than 800 orchid species. Approximately 118 species in this genus are from the Caribbean and all but one are single-island endemics (Stimson 1969, p. 332; Barre and Feldmann 1991, p. 11; Tremblay and Ackerman 1993, p. 339; Luer 2014, p. 260). This species is a small, epiphytic orchid about 1.57 inches (in.) (4 centimeters (cm)) tall and is distinguished from other members of the genus by its obovate to oblanceolate leaves, ciliate sepals, and the length of the inflorescence (Vivaldi *et al.* 1981, p. 26; Luer 2014, p. 260). The inflorescence is a long (0.03 in.; 0.75 millimeters (mm)), peduncled raceme (flower cluster with flowers on separate short stalks) with reddish flowers. No more than two flowers are produced at the same time, and the flowers are open on the inflorescence for about 10 days (Meléndez-Ackerman and Tremblay 2017, p. 1).

Life History

For purposes of the SSA, we considered *Lepanthes eltoroensis* to be a single metapopulation, the individual trees that host the *L. eltoroensis* plants as subpopulations, and the host tree aggregates as patches (USFWS 2019, p. 16). A number of characteristics (see below) suggest that a metapopulation approach may be appropriate to understand orchid population dynamics (see USFWS 2019, pp. 14–15) and epiphytic species (Snall *et al.* 2003, p. 567; Snall *et al.* 2004, p. 758; Snall *et al.* 2005, pp. 209–210), like *L. eltoroensis.* Metapopulations are defined as a set of subpopulations with independent local dynamics occupying discrete patches (Hanski 1999, entire; Hanski and Gaggiotti 2004, pp. 3–22), so that simultaneous extinction of all subpopulations is unlikely.

Populations of *Lepanthes* orchids exhibit high variance in reproductive potential, high variance in mean reproductive lifespan (Tremblay 2000, pp. 264–265), and few adults per population (Tremblay 1997a, p. 95). Less than 20 percent of individuals reproduce, and most subpopulations (60 percent of host trees) have fewer than 15 individuals. In addition, the distribution of individuals (seedling, juvenile, and adults) varies enormously among trees and is skewed towards few individuals per tree (Tremblay and Velazquez-Castro 2009, p. 214). The lifespan of *L. eltoroensis* can reach 30 to 50 years (Tremblay 1996, pp. 88–89, 114). However, the mean is 5.2 years, with an average percent mortality of 10 percent per year, although this varies greatly among life stages. Survival increases as individual orchids reach later life stages, but fewer plants reach adulthood and have the opportunity to contribute offspring to the next generation (Tremblay 2000, p. 265; Rosa-Fuentes and Tremblay 2007, p. 207). Because distribution of the species is within a protected national forest, access to moss, dispersal ability, reproductive success, and lifespan influence survivorship more than other potential human-induced threats (Tremblay 2000, p. 265; Rosa-Fuentes and Tremblay 2007, p. 207).

The reproductive success of *Lepanthes eltoroensis* subpopulations is highly sensitive to temporal variation in environmental conditions (Tremblay and Hutchings 2002, entire). Further, reproductive success of *L. eltoroensis,* as in most orchids, is pollinator-limited (Tremblay *et al.* 2005, p. 6). This obligate cross-pollinated species (Tremblay *et al.* 2006, p. 78) uses a deceptive pollination system, typically characterized by very few reproductive events (~ less than 20 percent chance; Tremblay *et al.* 2005, p. 12). Although we do not know the pollinator for *L. eltoroensis,* elsewhere fungus gnats visit *Lepanthes* orchids (Blanco and Barboza 2005, p. 765) and pollinate by pseudocopulation; therefore, it is likely fungus gnats are a pollinator for *L. eltoroensis.* Fungus gnats do not travel far—perhaps tens of meters or even a few hundred meters (Ackerman 2018)—limiting pollen dispersal for *L.*

eltoroensis. Most *L. eltoroensis* pollination occurs among individuals within a host tree, resulting in high inbreeding and low genetic variability (Tremblay and Ackerman 2001, pp. 55–58). The seeds of *L. eltoroensis* are wind-dispersed and require a mycorrhizal association for germination and survival until plants start photosynthesis (Tremblay and Ackerman 2001, p. 55; Tremblay 2008, p. 85).

Distribution and Abundance

Lepanthes eltoroensis is endemic to El Yunque National Forest (El Yunque), Puerto Rico. It is restricted to one general area within the Sierra Palm, Palo Colorado, and dwarf forests of the El Toro and Trade Winds trails (USFWS 2015, p. 5) at elevations above 2,461 feet (750 meters) (USFWS 1996, p. 2). At the time of listing, the species consisted of an estimated 140 individual plants. Since then, surveys have located additional individuals and subpopulations (groups of *L. etoroensis* on the same host tree) resulting in a much greater estimate of individuals than at the time of listing. Surveys for *L. eltoroensis* have been infrequent, sparse, and done with varying spatial spread and methodology, making the results difficult to compare over time (USFWS 2019, pp. 34–52). However, partial surveys conducted periodically from 2000 to 2018 have found greater numbers of *L. eltoroensis* (USFWS 2019, pp. 49–50). In addition, surveys conducted between 2000 and 2005 indicated the subpopulations surveyed along El Toro Trail and Trade Winds Trail were relatively stable over the 5-year period (USFWS 2019, p. 39). The best available metapopulation estimate is 3,000 individual plants (Tremblay 2008, p. 90; USFWS 2015, p. 5). Overall, data collected for the SSA did not indicate a general pattern of population decline, but rather natural fluctuations (USFWS 2019, p. 52).

The metapopulation estimate was made prior to Category 5 Hurricane Maria making landfall on Puerto Rico in 2017. A post-hurricane partial survey along the El Toro Trail was completed in 2018, and found 641 total plants, including over 300 that had not been previously identified (Meléndez-Ackerman 2018, pers. comm.). We note that this was only a partial survey; there has never been a complete census of the entire metapopulation because most of the areas off the two main trails (El Toro and Trade Winds) are dangerous and inaccessible. However, the forest types *Lepanthes eltoroensis* is most affiliated with—Palo Colorado, Sierra Palm, and Dwarf Forest—cover over 13,000 acres (ha) within the El Yunque (USFWS 2019, p. 8). Given the amount of unreachable habitat that has not been surveyed, all estimates are likely to underestimate the true abundance of the species (USFWS 2019, p. 50). Surveys of habitat outside traditional population sites (on or just off trails) could result in discovery of additional plants (Tremblay 2008, p. 90; USFWS 2019, pp. 18, 50, 73). In addition, since the time of listing, the species has faced multiple strong hurricanes (Hugo, Georges, Hortense, Irma, and Maria), and we currently know of more individuals than at the time of listing, indicating the species' abundance has remained stable (with all age classes represented and in good health) despite such events, and the species has the ability to recover from stochastic disturbances (USFWS 2019, pp. 51–52). Therefore, although the species and its habitat were harmed by the recent hurricanes (namely Maria), the previous estimate of 3,000 individual plants is still our best estimate.

Habitat

Lepanthes eltoroensis occurs on moss-covered trunks (*i.e.,* host trees) within upper elevation cloud forests in the Sierra Palm, Palo Colorado, and Dwarf Forest associations of El Yunque (Luer 2014, p. 260; Ewel and Whitmore 1973, pp. 41–49), where humidity ranges from 90 to 100 percent, and cloud cover is continuous, particularly during the evening hours (55 FR 41248; October 10, 1990). Important habitat components seem to be elevation, adequate temperature and moisture regimes, open/semi-open gaps in the canopy, and presence of moss.

Regulatory and Analytical Framework

Regulatory Framework

Section 4 of the Act (16 U.S.C. 1533) and its implementing regulations (50 CFR part 424) set forth the procedures for determining whether a species is an ''endangered species'' or a ''threatened species.'' The Act defines an endangered species as a species that is ''in danger of extinction throughout all or a significant portion of its range,'' and a threatened species as a species that is ''likely to become an endangered species within the foreseeable future throughout all or a significant portion of its range.'' The Act requires that we determine whether any species is an ''endangered species'' or a ''threatened species'' because of any of the following factors:

(A) The present or threatened destruction, modification, or curtailment of its habitat or range;

(B) Overutilization for commercial, recreational, scientific, or educational purposes;

(C) Disease or predation;

(D) The inadequacy of existing regulatory mechanisms; or

(E) Other natural or manmade factors affecting its continued existence.

These factors represent broad categories of natural or human-caused actions or conditions that could have an effect on a species' continued existence. In evaluating these actions and conditions, we look for those that may have a negative effect on individuals of the species, as well as other actions or conditions that may ameliorate any negative effects or may have positive effects.

We use the term ''threat'' to refer in general to actions or conditions that are known to or are reasonably likely to negatively affect individuals of a species. The term ''threat'' includes actions or conditions that have a direct impact on individuals (direct impacts), as well as those that affect individuals through alteration of their habitat or required resources (stressors). The term ''threat'' may encompass—either together or separately—the source of the action or condition or the action or condition itself.

However, the mere identification of any threat(s) does not necessarily mean that the species meets the statutory definition of an ''endangered species'' or a ''threatened species.'' In determining whether a species meets either definition, we must evaluate all identified threats by considering the expected response by the species, and the effects of the threats—in light of those actions and conditions that will ameliorate the threats—on an individual, population, and species level. We evaluate each threat and its expected effects on the species, then analyze the cumulative effect of all of the threats on the species as a whole. We also consider the cumulative effect of the threats in light of those actions and conditions that will have positive effects on the species—such as any existing regulatory mechanisms or conservation efforts. The Secretary determines whether the species meets the definition of an ''endangered species'' or a ''threatened species'' only after conducting this cumulative analysis and describing the expected effect on the species now and in the foreseeable future.

The Act does not define the term ''foreseeable future,'' which appears in the statutory definition of ''threatened species.'' Our implementing regulations at 50 CFR 424.11(d) set forth a framework for evaluating the foreseeable

future on a case-by-case basis. The term foreseeable future extends only so far into the future as the Services can reasonably determine that both the future threats and the species' responses to those threats are likely. In other words, the foreseeable future is the period of time in which we can make reliable predictions. ''Reliable'' does not mean ''certain''; it means sufficient to provide a reasonable degree of confidence in the prediction. Thus, a prediction is reliable if it is reasonable to depend on it when making decisions.

It is not always possible or necessary to define foreseeable future as a particular number of years. Analysis of the foreseeable future uses the best scientific and commercial data available and should consider the timeframes applicable to the relevant threats and to the species' likely responses to those threats in view of its life-history characteristics. Data that are typically relevant to assessing the species' biological response include species-specific factors such as lifespan, reproductive rates or productivity, certain behaviors, and other demographic factors.

Analytical Framework

We completed a comprehensive assessment of the biological status of *Lepanthes eltoroensis* and prepared a report of the assessment (SSA report), which provides a thorough account of the species' overall viability using conservation biology principles of resiliency, redundancy, and representation (collectively, the ''3Rs''). We define viability here as the ability of the species to persist over the long term and, conversely, to avoid extinction. We have used the SSA report's assessment of *L. eltoroensis'* current and potential future conditions, based on the factors influencing the species and framed in the context of the 3Rs, to inform our understanding of risk to the species and our determination whether *L. eltoroensis* continues to meet the definition of an endangered species, whether it meets the definition of a threatened species, or whether it does not meet the definition of either an endangered species or a threatened species (see Determination, below). In this discussion, we summarize the conclusions of that assessment, which can be accessed at *http://www.regulations.gov* under Docket No. FWS–R4–ES–2019–0073.

Lepanthes eltoroensis was listed as an endangered species in 1991, due to its rarity (Factor E), its restricted distribution (Factor E), forest management practices (Factor A), impacts from hurricane damage (Factor E), and collection (Factor B) (56 FR 60933, November 29, 1991, p. 56 FR 60935). The most important factor affecting *L. eltoroensis* at that time was its limited distribution. Additionally, its rarity made the species vulnerable to impacts from hurricanes, such as unfavorable microclimatic conditions resulting from numerous canopy gaps. Because so few individuals were known to occur, the risk of extinction was considered to be extremely high (56 FR 60933, November 29, 1991, p. 56 FR 60935).

Summary of Biological Status and Threats

In this section, we review the biological condition of the species and its resources, and the influence to assess the species' overall viability and the risks to that viability.

Risk Factors for Lepanthes eltoroensis

Forest Management Practices

At the time of listing (1991), El Yunque management practices such as establishment and maintenance of plantations, selective cutting, trail maintenance, and shelter construction were considered threats to *Lepanthes eltoroensis* (56 FR 60933, November 29, 1991, p. 56 FR 60935). The Recovery Plan further indicated that destruction and modification of habitat might be the most significant factors affecting the number of individuals and distribution of the species (USFWS 1996, p. 5).

Since the species was listed, several laws have been enacted that provide protections to this species. In 1999, Commonwealth Law No. 241 (New Wildlife Law of Puerto Rico or *Nueva Ley de Vida Silvestre de Puerto Rico*) was enacted to protect, conserve, and enhance native and migratory wildlife species. This law requires authorization from the Puerto Rico Department of Natural and Environmental Resources (PRDNER) Secretary for any action that may affect the habitat of any species. Furthermore, part of El Yunque (including the habitat where *Lepanthes eltoroensis* is currently known to occur) was congressionally designated as the El Toro Wilderness in 2005, to preserve its natural conditions, including species like *L. eltoroensis,* inhabiting the area (Caribbean National Forest Act of 2005 (Pub. L. 109–118); the Wilderness Act (16 U.S.C. 1131 *et seq.*); U.S. Forest Service (USFS) 2016, p. 32). The El Toro Wilderness consists of undeveloped USFS lands and is managed to preserve its natural conditions without any permanent improvements or human habitation (USFS 2016, p. 32). All known populations of *L. eltoroensis* occur within this wilderness area.

Scientists who have conducted research on *Lepanthes eltoroensis* do not consider destruction, curtailment, or modification of this species' habitat to be a factor threatening this species (Ackerman 2007, pers. comm.). In 2019, the USFS finalized a revised land and resources management plan to guide the general direction of El Yunque for the next 15 years. This plan specifically includes a set of standards and guidelines to protect the natural resources within the El Toro Wilderness, including listed species. Standards specific to the El Toro Wilderness include no salvaging of timber, no issuing permits for collection of plants or plant material unless for a scientific purpose, no new special-use permits for facilities or occupancy, managing recreation to minimize the number of people on the trails, and no construction of new trails (USFS 2019, pp. 1, 32–35). Standards and guidelines for at-risk (including listed) species detailed in the plan include not allowing collection of orchids unless approved for scientific purposes and making sure forest management activities are consistent with recovery plans (USFS 2019, p. 62). Implementation of management practices in El Yunque has also improved; there is no selective cutting, and maintenance is minimal as both El Toro and Trade Winds trails receive few visitors. Mostly researchers and forest personnel use El Toro and Trade Winds trails; therefore, few human encounters are expected (USFS 2016, p. 32). Additionally, the USFS coordinates with the Service to avoid or minimize impacts to a number of other federally listed species (*e.g.,* Elfin-woods warbler, *Ilex sintenisii*) that co-occur within the same areas a *L. eltoroensis* as part of their management practices in accordance with section 7 of the Act.

There is no evidence suggesting current forest management practices are negatively affecting the species or its specialized habitat (adequate temperature and moisture regimes, and presence of moss) (USFWS 2019, p. 24). Furthermore, based on existing laws, we expect El Yunque will remain permanently protected as a nature reserve and be managed for conservation. Therefore, we no longer consider forest management practices or destruction and modification of habitat to be threats to the species.

Hurricanes

The extremely restricted distribution of *Lepanthes eltoroensis* makes it particularly vulnerable to large-scale

disturbances, such as hurricanes and tropical storms, which frequently affect islands of the Caribbean (NOAA 2018, unpaginated). Due to its geographic location, hurricanes are more frequent in the northeastern quadrant of Puerto Rico, where El Yunque is located (White *et al.* 2014, p. 30). Current global climate models are rather poor in simulating tropical cyclones; however, the Intergovernmental Panel on Climate Change's climate simulations suggest that the Caribbean will experience a decrease in tropical cyclone frequency, but an increase in the frequency of the most intense events (PRCC 2013, p. 10; USFWS 2019, p. 56).

Cloud forests, where this species occurs, are much taller than other vegetation and are higher in elevation, making them more exposed and more easily affected by high winds and in need of more time to recover post-disturbance (Hu and Smith 2018, p. 827). Heavy rains and winds associated with tropical storms and hurricanes cause tree defoliation, habitat modification due to falling of trees, and landslides (Lugo 2008, p. 368). Surveys conducted along El Toro Trail following Hurricane Maria in 2018 focused on assessing the impacts to the species and its host trees (subpopulations). Nineteen host trees were not found and assumed to be lost due to the hurricane. An additional nine host trees were found knocked down. In total, 641 plants, including seedlings, juveniles, and reproductive and non-reproductive adults, were found; 322 were found on previously marked host trees (including 191 individuals on those host trees that were knocked to the ground), and 319 were new individuals not previously surveyed (Melendez-Ackerman 2018, pers. comm.). Given that *Lepanthes eltoroensis* does not persist on felled or dead trees (Benítez and Tremblay 2003, pp. 67–69), we assume many of these 191 individuals (approximately 30 percent of individuals found) will not survive, resulting in the loss of those individuals from the metapopulation. However, based on previous efforts, we know individual plants can be moved to new host trees and do quite well, highlighting the feasibility of relocation to increase the species' long-term viability in the context of severe hurricanes such as Hurricane Maria. University of Puerto Rico researchers translocated some of these 191 individuals, but because the translocations occurred months after the hurricane, we do not expect survival to be as high as if it had occurred immediately after the hurricane. Furthermore, this species has persisted from past hurricane events without active management of translocating species from felled host trees.

In addition, associated microclimate changes resulting from downed trees and landslides after severe storms (*e.g.,* increased light exposure, reduction in relative humidity) may negatively affect the growth rate of *Lepanthes eltoroensis* populations (Tremblay 2008, pp. 89–90). Following Hurricane Georges in 1998, non-transplanted populations of *L. eltoroensis* had negative growth rates, while groups of plants that were transplanted to better habitats within the forest had positive growth rates (Benitez-Joubert and Tremblay 2003, pp. 67–69). Furthermore, based on data on related species, *L. eltoroensis* growth rates may be negatively affected by excess light from gaps caused by felled trees during hurricanes (Fernandez *et al.* 2003, p. 76).

The inherently low redundancy (the ability of a species to withstand catastrophic events) of *Lepanthes eltoroensis* due to its limited range makes hurricanes and tropical storms a primary risk factor. However, given the observed stable trend from past surveys and recent partial surveys in 2018 (USFWS 2019, pp. 39, 45–48), it appears that the species has the ability to recover from normal stochastic disturbances (USFWS 2019, pp. 51–52). Additionally, relocation has proven to be a viable conservation strategy for this species (Benítez and Tremblay 2003, pp. 67–69). Relocating plants from fallen trees to standing trees following hurricane events results in higher survival of those transplanted individuals. This management strategy can improve and maximize species' survival and reproductive success after hurricane events (Benítez and Tremblay 2003, pp. 67–69; Tremblay 2008, pp. 83–90). Following this recommendation, after Hurricane Maria, researchers from the University of Puerto Rico translocated some *L. eltoroensis* individuals along the El Toro trail. These individuals are currently being monitored to assess survival. In addition, since *L. elotoroensis* is part of the USDA Forest Service's ''Plant Species of Conservation Interest of El Yunque'' (USFS 2018, p. 37) and is included in the 2016 revised Land and Resource Management Plan that details a management concept focused on conservation, particularly to protect unique ecological resources (USFS 2016, p.1), the USFS will continue to implement conservation actions, such as habitat protection, enhancement, and relocation of *L. eltoroensis* individuals following hurricanes as deemed necessary.

Collection

Collection for commercial or recreational purposes eliminated one population of *Lepanthes eltoroensis* prior to listing under the Act (56 FR 60933; November 29, 1991). The rarity of the species made the loss of even a few individuals a critical loss to the species as a whole.

The USFS regulations in title 36 of the Code of Federal Regulations at part 261, section 261.9 (36 CFR 261.9) prohibit collection of listed plant species in wilderness areas. Additionally, since the species was listed under the Act in 1991, other laws have been enacted that provide protections to the species from collection or removal. Commonwealth Law No. 241 (New Wildlife Law of Puerto Rico or *Nueva Ley de Vida Silvestre de Puerto Rico*), enacted in 1999, protects, conserves, and enhances native and migratory wildlife species. Specifically, Article 5 of this law prohibits collection and hunting of wildlife species, including plants within the jurisdiction of Puerto Rico without a permit from the PRDNER Secretary. In 2004, *Lepanthes eltoroensis* was included in the list of protected species of Regulation 6766 (*Reglamento 6766 para Regir el Manejo de las Especies Vulnerables y en Peligro de Extinción en el Estado Libre Asociado de Puerto Rico*), which governs the management of endangered and threatened species within the Commonwealth of Puerto Rico. Article 2.06 of this regulation prohibits collecting, cutting, and removing, among other activities, listed plant individuals within the jurisdiction of Puerto Rico. *L. eltoroensis* will likely remain protected under Commonwealth laws and regulations even after it is delisted from the ESA. Commonwealth Regulation 6766 provides protection to species that are not federally listed or that have been removed from the ESA, and the species will remain protected under the Wilderness provisions from the 2016 revised Land and Resource Management Plan for El Yunque (USFS 2016, entire). According to this plan, any influences by humans on the natural process that take place in the wilderness area will be to protect threatened and endangered species in addition to human life (USFS 2016, p. 33). As such, the standards of the plan include conducting wildlife and plant habitat/population surveys and monitoring in a manner compatible with the goals and objectives of wilderness (USFS 2016, p. 34). Additional protection measures include not issuing forest product permits for collection of plants or plant material in wilderness areas (unless for scientific and

educational purposes and approved by the forest biologist/ecologist), and management strategies to design, construct, and maintain trails to the appropriate trail standard in order to meet wilderness standards protections (USFS 2016, p. 34).

Despite the one documented instance of collection, the threat of collection is low, given that few people venture into the El Toro Wilderness (Tremblay 2007, pers. comm.) and that the small size (less than 2 in. (4 cm) tall) and inconspicuousness of this species makes it easy to overlook (Ackerman 2007, pers. comm.; Tremblay 2007, pers. comm.). Additionally, this species is not used for commercial or recreational purposes and is not considered to have ornamental value (USFWS 2015, p. 8). Thus, there is no evidence that collection is currently impacting *Lepanthes eltoroensis* (USFWS 2019, p. 24) or likely to do so in the future.

Small Population Size and Low Reproduction

The smaller the population, the greater the probability that fluctuations in population size from stochastic variation (*e.g.,* reproduction and mortality) will lead to extirpation. There are also genetic concerns with small populations, including reduced availability of compatible mates, genetic drift, and inbreeding depression. Small subpopulations of *Lepanthes eltoroensis* are particularly vulnerable to stochastic events, thus contributing to lower species' viability (USFWS 2019, p. 24).

Lepanthes eltoroensis may experience declining growth related to the distribution of individuals among host trees and demographic processes (*e.g.,* reproductive success, survival), which can be negatively influenced by environmental and catastrophic risks (USFWS 2019, p. 25). Fruit production is limited; therefore, opportunities for establishment are limited. Less than 20 percent of individuals reproduce, and most subpopulations (60 percent of host trees) have fewer than 15 individuals. In addition, the distribution of individuals (seedling, juvenile, and adults) varies enormously among trees and is skewed towards few individuals per tree (Tremblay and Velazquez-Castro 2009, p. 214). Despite small subpopulations of *L. eltoroensis* with limited distribution and naturally limited fruit production, this species has continued to persist even after regular exposure to disturbances. In addition, we now estimate the species population to be 3,000 individuals, which is a significant increase from the 140 individuals known at the time of listing. Therefore, the species' vulnerability to extinction is reduced.

Genetic Risks

The main genetic risk factor for the species is low genetic variability. The effective population size (number of individuals in a population who contribute offspring to the next generation) ranges from 3 to 9 percent of the standing population (number of individuals in a population) (Tremblay and Ackerman 2001, entire). In other words, for every 100 adults, maybe 9 will transfer genes to the next generation. In addition, although *Lepanthes eltoroensis* can survive for up to 50 years, most seedlings and juveniles die (Tremblay 2000, p. 264). Therefore, very few individuals are responsible for the majority of seed production, decreasing the genetic diversity as a whole in subpopulations (Meléndez-Ackerman and Tremblay 2017, pp. 5–6).

There is evidence for low gene flow in the species. Estimated gene flow in *Lepanthes eltoroensis* is less than two effective migrants per generation (the effective generation of the orchid) (Tremblay and Ackerman 2001, p. 54). This implies that most mating is among individuals within a host tree, potentially resulting in high inbreeding, low genetic variability, and inbreeding depression (Tremblay and Ackerman 2001, pp. 55–58). Low genetic diversity may be reflected in reduced genetic and environmental plasticity, and thus, low ability to adapt to environmental changes. If there are high rates of inbreeding, this could lead to inbreeding depression, and could have profound long-term negative impacts to the viability of the species (USFWS 2019, pp. 28–29). However, the species is likely an obligate cross-pollinated species (Tremblay *et al.* 2006, p. 78), which is a mechanism to reduce inbreeding. Additionally, this species has demonstrated the ability to adapt to changing environmental conditions (*i.e.,* natural disturbances) over time (USFWS 2019, p. 54).

Effects of Climate Change

The average temperatures at El Yunque have increased over the past 30 years (Jennings *et al.* 2014, p. 4; Khalyani *et al.* 2016, p. 277). Climate projections indicate a 4.6 to 9 degrees Celsius (°C) (8.2 to 16.2 degrees Fahrenheit (°F)) temperature increase for Puerto Rico from 1960–2099 (Khalyani *et al.* 2016, p. 275). Additionally, projections indicate a decrease in precipitation and acceleration of the hydrological cycles resulting in wet and dry extremes (Jennings *et al.* 2014, p. 4; Cashman *et al.* 2010, pp. 52–54). In one downscaled model, precipitation is projected to decrease faster in wetter regions like the Luquillo Mountains, where El Yunque is located, and the central mountains of Puerto Rico (Khalyani *et al.* 2016, p. 274). In contrast, ongoing research suggests higher elevations may have a buffering effect on declining trends in precipitation (Bowden 2018, pers. comm.; USFWS 2019, pp.65–66). Downscaled modeling for Puerto Rico was based on three Intergovernmental Panel on Climate Change global emissions scenarios from the CMIP3 data set: mid-high (A2), mid-low (A1B), and low (B2) (Khalyani *et al.* 2016, p. 267). Under all of these scenarios, emissions increase, precipitation declines, temperature and total dry days increase, and subtropical rain and wet forests are lost, while all wet and moist forest types decrease in Puerto Rico; the differences in the scenarios depends on the extent of these changes and the timing of when they are predicted to occur (USFWS 2019, p.67).

The most important potential risk to *Lepanthes eltoroensis* is the projected shift of the life zones of Puerto Rico from humid to drier. This includes changes in relative area and distribution pattern of the life zones, and the disappearance of humid life zones (Khalyani *et al.* 2016, p. 275). Decreased rainfall in northeastern Puerto Rico (*i.e.,* El Yunque) can cause migration, distribution changes, and potential extirpation of many species that depend on the unique environmental conditions of the rain forest (Weaver and Gould 2013, p. 62). These projections may have direct implications for *L. eltoroensis* because the acreage of the lower montane wet forest life zone it occupies could decrease, resulting in less habitat available for the species. Epiphytes like *L. eltoroensis* could experience moisture stress due to higher temperatures and less cloud cover with a rising cloud base, affecting their growth and flowering (Nadkarni and Solano 2002, p. 584). Due to its specialized ecological requirements and restricted distributions within the dwarf forest, *L. eltoroensis* could be more adversely impacted by the effects of climate change than other species with wider distribution (*e.g.,* lower elevation species) and greater plasticity, thus, reducing its viability. Predictions of life zone changes are not expected to affect resiliency of *L. eltoroensis* until after mid-century, and predictions out to 2100 vary in severity of impact (USFWS 2019, p.69).

Another potential risk to *Lepanthes eltoroensis* is the increase in

catastrophic hurricanes resulting from climate change. The persistence of *L. eltoroensis* through repeated past hurricanes and other storms suggests it has the ability to recover and adapt from disturbances, and relocation of individuals from blown-down host trees further accelerates the recovery of the species post-hurricane (USFWS 2019, p. 73). In fact, ongoing monitoring show an initial positive population growth rate of *L. eltoroensis* despite the loss of host trees following hurricane María (Melendez-Ackerman 2019, pers. comm.).

Overall we anticipate the range of *Lepanthes eltoroensis* to contract due to changes in climatic variables leading to loss of wet and tropical montane habitats, potentially exacerbated by an increase in the frequency and severity of hurricanes by the end of the century (2100). However, surveys outside of the areas where the species is traditionally searched, along with an associated habitat model, would help better predict the future viability of *L. eltoroensis* (USFWS 2019, p. 73). Although changes to precipitation and drought, temperature, and life zones are expected to occur on Puerto Rico, over the next 20 to 30 years they are not predicted to be substantial. Modeling shows dramatic changes to Puerto Rico through 2100, the divergence in these projections increases dramatically after mid-century, making projections beyond 20 to 30 years more uncertain (Khalyani et al. 2016, p. 275). Moreover, *L. eltoroensis* is found in a protected area where synergistically damaging forest management practices are unlikely to occur, and there is the requirement for implementation of conservation management practices to mitigate negative impacts such as those caused by hurricanes.

Summary of Current Condition

Viability is defined as the ability of the species to sustain populations in the wild over time. To assess the viability of *Lepanthes eltoroensis,* we used the three conservation biology principles of resiliency, representation, and redundancy (Shaffer and Stein 2000, pp. 306–310). Briefly, resiliency supports the ability of the species to withstand environmental and demographic stochasticity (for example, wet or dry, warm or cold years); representation supports the ability of the species to adapt over time to long-term changes in the environment (for example, climate changes); and redundancy supports the ability of the species to withstand catastrophic events (for example, droughts, hurricanes). In general, the more redundant and resilient a species is and the more representation it has, the more likely it is to sustain populations over time, even under changing environmental conditions.

Resiliency

Factors that influence the resiliency of *Lepanthes eltoroensis* include abundance and growth trends within host trees, and habitat factors such as elevation, slope, aspect, precipitation, temperature, canopy cover, and presence of moss, mycorrhizal fungi, and pollinators. Influencing those factors are elements of *L. eltoroensis'* ecology that determine whether populations can grow to maximize habitat occupancy, thereby increasing resiliency. Stochastic factors that have the potential to affect *L. eltoroensis* include impacts to its habitat from hurricanes and effects of climate change (*i.e.,* changes in temperature and precipitation regimes). Beneficial factors that influence resiliency include the protected status of the species' habitat, as the known range of the species is entirely within the El Toro Wilderness and therefore protected from human-induced habitat loss and collection.

The best available surveys of *Lepanthes eltoroensis* found that the number of individuals is greater than at the time of listing (Tremblay 2008, p. 90), approximately 3,000 individual plants. The distribution of *L. eltoroensis* has not been investigated outside of traditional areas (*i.e.,* just off El Toro and Trade Wind Trails); however, some researchers suggest that additional populations may occur within suitable habitat outside El Toro Trail. In fact, additional individuals have been found near, but outside El Toro Trail (Tremblay 2008, p. 90). Assuming a metapopulation size of 3,000 individuals, and observed stable subpopulations from past surveys (including recent partial surveys in 2018), this suggests the species has the ability to recover from normal stochastic disturbances; thus, we consider the species to be moderately resilient.

Representation

We lack genetic and ecological diversity data to characterize representation for *Lepanthes eltoroensis.* In the absence of species-specific genetic and ecological diversity information, we typically evaluate representation based on the extent and variability of habitat characteristics across the geographical range. Because the species does not appear to have much physiological flexibility, given that it has a rather restricted distribution (cloud forests on ridges), representative units were not delineated for this species. Available data suggest that conditions are present for genetic drift and inbreeding (Tremblay 1997a, p. 92). However, the effect of a genetic drift on the species into the future is uncertain, and the most updated *L. eltoroensis* information shows that the species has the ability to adapt to changing environmental conditions (*i.e.,* natural disturbances) over time. Furthermore, some of the factors that we concluded would reduce representation at the time of listing, such as habitat destruction and collection, are no longer acting as stressors upon the species. Finally, because the population is significantly larger than was known at the time of listing, representation has improved.

Redundancy

Redundancy for *Lepanthes eltoroensis* is the total number and resilience of subpopulations and their distribution across the species' range. This species is endemic to El Yunque, and it has not been introduced elsewhere. Despite the presence of multiple subpopulations (*i.e.,* host trees), these subpopulations are located within a narrow/restricted range at El Toro Wilderness Area and are all exposed to similar specific habitat and environmental conditions. Population surveys by Meléndez-Ackerman et al. (2018) accounted for at least 61 host trees or subpopulations prior to hurricane Maria. Of these, Meléndez-Ackerman et al. (2018) were not able to locate 19 host trees following the hurricane, and studies are ongoing to determine the species response from the disturbance. Although redundancy is inherently low due to the narrow range the species inhabits, it has persisted despite past natural disturbances (*i.e.,* hurricanes, tropical storms, etc.), and is considered more abundant within its habitat than previously documented.

Projected Future Status

Lepanthes eltoroensis only occurs within the protected El Yunque lands where stressors—including forest management practices, urban development surrounding El Yunque, and overcollection—are not expected to be present or are expected to remain relatively stable and unlikely to affect the species in the future. Because *L. eltoroensis* occurs on protected lands managed by the USFS, it will benefit from their ongoing conservation practices, which include the relocation of plants from fallen host trees after a hurricane as deemed necessary, to alleviate the negative impacts of these storm events. The effect of genetic drift on the species into the future is uncertain, but *L. eltoroensis* has thus far

demonstrated the ability to adapt to changing environmental conditions (*i.e.,* natural disturbances) over time (USFWS 2019, pp. 51–52). The primary stressor affecting the future condition of *L. eltoroensis* is current and ongoing climate change stressors (Meléndez-Ackerman and Tremblay 2017, p. 1) and the associated shifts in rainfall, temperature, and storm intensities. These stressors account for indirect and direct effects at some level to all life stages and across the species' range.

All of these climate change stressors are predicted to result in shifts in the distribution of life zones present on Puerto Rico, with some of the most dramatic impacts predicted to occur in the latter half of the century in the tropical and subtropical wet forests in which the species resides (USFWS 2019, p. 57). Key life-history factors that make this species vulnerable to climate change stressors are its restricted range within the tropical and subtropical wet forests within El Yunque and low subpopulation sizes (USFWS 2015, pp. 7–10). Given the relatively low genetic and environmental plasticity of the species, it potentially does not have the capacity to adapt to these predicted conditions (USFWS 2019, p. 52).

To examine the potential future condition of *Lepanthes eltoroensis,* we used three future scenarios based on climate change predictions for Puerto Rico (Khalyani *et al.* 2016, entire), which used global emission scenarios (mid-high (A2), mid-low (A1B), and low (B1) (Nakicenovic and Swart 2000, entire)) to capture a range of possible scenarios. Our assessment of future viability includes qualitative descriptions of the likely impacts of climate change under the above three scenarios from the literature, and is intended to capture the uncertainty in the species' response to climate stressors, and the lack of information on abundance and growth rates.

Climate Change Predictions

Projections out to the year 2100 predict increases in temperature and decreases in precipitation, particularly in wetter regions like El Yunque (Khalyani *et al.* 2016, pp. 274–275). However, divergence in temperature and precipitation projections increases dramatically after mid-century, depending on the scenario (Khalyani *et al.* 2016, p. 275; USFWS 2019, pp. 59–62), making projections beyond 20 to 30 years uncertain. Given the average lifespan of the species (approximately 5 years), a period of 20 to 30 years allows for multiple generations and detection of any population changes. Additionally, the species has been listed for close to 30 years, so we have a baseline to understand how populations have performed in that period. Therefore, the ''foreseeable future'' used in this determination is 20 to 30 years.

Precipitation and Drought

In general, projections show similar patterns of changes in precipitation and drought intensity and extremes, although total changes were greater for the A2 scenario (Khalyani *et al.* 2016, pp. 272–273, 274; USFWS 2019, pp. 59–60). Under scenarios A2, A1B, and B1, annual precipitation is projected to decrease by 510 to 916 millimeters (mm) (20 to 36 in.), 354 to 842 mm (14 to 33 in.), and 312 to 619 mm (12 to 24 in.), respectively, by 2100. Current annual precipitation in Puerto Rico averages 745 to 4,346 mm (29 to 171 in.). However, differences in precipitation between the three scenarios were greater after the mid-century (Khalyani *et al.* 2016, p. 274). Before then decreases in rainfall are expected to be far less; rainfall decreases are expected to be 0.0012 to 0.0032 mm per day per year through 2050 (PRCC 2013, p. 7). Additionally, for all three climate scenarios, significant decreases in precipitation for the northern wet forests are not predicted until after 2040 (USFWS 2019, p. 60). Furthermore, the U.S. Geological Survey projection for Puerto Rico predicts an overall drying of the island and a reduction in extreme rainfall occurrence; however, this model suggests higher elevations, like those supporting *L. eltoroensis,* may have a buffering effect on declining trends in precipitation (Bowden 2018, pers. comm.). Therefore, precipitation declines are not likely to occur in the area supporting *L. eltoroensis* during the foreseeable future. On the other hand, drought intensity increased steadily under all three scenarios, but with a gradual increase in drought extremes (Khalyani *et al.* 2016, pp. 274–275). This increase is linear for all three scenarios.

Temperature

By 2100, all three scenarios predict increases in temperature with increases of 7.5–9.0 °C (13.5–16.2 °F), 6.4–7.6 °C (11.5–13.4 °F), and 4.6–5.4 °C (8.3–9.7 °F) under the A2, A1B, and B1 scenarios, respectively (Khalyani *et al.* 2016, p. 275). However, like with precipitation, projected increases in temperature are not substantial until after 2040. Projections show only a 0.8 °C (1.4 °F) increase by mid-century under all three scenarios. These scenarios differentiate the most from each other in later time intervals (after 2040) (Khalyani *et al.* 2016, pp. 275, 277). However, we are not aware of any information that would indicate these air temperature increases will influence formation of the cloud cover over El Yunque, which could in turn impact interior temperatures and humidity of the forest, where *Lepanthes eltoroensis* is found.

Life Zones

Dramatic changes are projected in the life zone distributions in Puerto Rico, although the changes vary by life zone and are predicted to be much more significant after mid-century. Because life zones are derived from climate variables (*e.g.,* precipitation and temperature), general changes in life zone distribution are similar to changes in climatic variables. For example, annual precipitation changes will result in shifts from rain, wet and moist zones to drier zones (Khalyani *et al.* 2016, p. 275), and changes in temperature will result in changes from subtropical to tropical. In general, decreasing trends were observed in the areas of wet and moist zones, while increasing trends were observed in dry zones under all three scenarios (Khalyani *et al.* 2016, pp. 275, 279). Under all scenarios, loss of subtropical rain and wet forests are observed, although decreasing trends were observed in the area of wet and moist zones, while increasing trends were observed in the areas of dry zones in all three scenarios. Additionally, the loss of wet and moist zones in the northeastern mountain area that supports *Lepanthes eltoroensis* is not predicted to be substantial, and the area remains relatively stable until after 2040 (USFWS 2019 p. 69). This may be due to possible buffering effects of elevation across the island.

In summary, changes to precipitation and drought, temperature, and life zones are expected to occur on Puerto Rico, but over the next 20 to 30 years, they are not predicted to be substantial. Although modeling shows changes to Puerto Rico through 2100, the divergence in these projections increases dramatically after mid-century, making projections beyond 20 to 30 years more uncertain.

These projected changes may have direct or at least indirect effects on *Lepanthes eltoroensis;* however, viability of the species under all scenarios is expected to remain stable within the foreseeable future (USFWS 2019, p. 71). Potential direct effects include a reduced number of seedlings as the number of dry days increase, a reduced number of fruits as minimum average temperature increases, and a reduced number of adults as maximum temperature increases (Olaya-Arenas *et*

al. 2011, p. 2042). Additionally, projected changes in hurricane frequencies (and associated habitat changes) may negatively affect the growth rate of *L. eltoroensis* populations (Tremblay 2008, pp. 89–90) due to increases in light penetration from defoliation. Indirect effects are related to potential changes in moss cover and composition due to temperature and precipitation changes. Data from related species showed that orchid density, growth, and establishment were positively associated with moss species richness (Crain 2012, pp. 15–16; Garcia-Cancel *et al.* 2013, p. 6). Therefore, a change in forest temperature and humidity could affect the establishment and distribution of moss and, thus, *L. eltoroensis* (USFWS 2019, p. 11).

Persistence of the species through repeated past hurricanes and other storms suggests the species has the ability to recover and adapt from disturbances, and relocation of individuals from blown-down host trees further accelerates the recovery of the species post-hurricane. In fact, many researchers at El Yunque have concluded that hurricanes are the main organizing force of the forests (USFWS 2019, p. 71). The forests go through a cycle that averages 60 years, starting with great impact by winds and rain of a hurricane, and then 60 years of regrowth (Lugo 2008, p. 371). In those 60 years of regrowth, complete changes in the species that dominate the landscape can occur. Although the hurricane appears destructive, it can be constructive because it makes the area more productive—it rejuvenates the forest (USFWS 2019, p. 71). Currently, El Yunque is at the initial phase of early succession following Hurricane Maria (2017), which produced severe tree mortality and defoliation, including *Lepanthes eltoroensis* host trees.

In general, we anticipate the range of the species may contract somewhat due to changes in climatic variables, although the loss of wet and moist zones in the northeastern mountain area that supports *Lepanthes eltoroensis* is not predicted to be substantial by mid-century (USFWS 2019, p. 66). The range contraction may be exacerbated by an increase in the frequency and severity of hurricanes. However, as the species occurs within El Yunque, synergistic negative effects of development and deleterious forest management practices are unlikely threats to the species in the future. Currently, *L. eltoroensis* and its habitat at the El Yunque are protected by Congressional designation of El Toro Wilderness Area (Forest Plan 2016, p. 32), thus precluding human disturbance. Because the El Yunque management plan includes a set of standards and guidelines to protect the natural resources within the El Toro Wilderness, including other co-occurring federally listed species (*e.g., Ilex sintenisii* and *Ternstroemia luquillensis*) (USFS 2019, pp. 1, 32–35), the Service anticipates continued implementation of conservation and management practices to improve the habitat of all species within the area, including actions to mitigate hurricane impacts.

Future Viability

Resiliency

Under all future scenarios, resiliency is projected to remain moderate through at least the next 20 to 30 years. As mentioned above, there is very little projected contraction of the wet and moist forests within this timeframe. Although increasing catastrophic hurricanes are possible, relocation of plants can ameliorate some of these impacts.

Redundancy

Redundancy is expected to remain stable under all scenarios for the next 20 to 30 years, although this prediction is uncertain given the very limited range of the species and the lack of knowledge about the full extent of the species' range (*i.e.,* no surveys conducted off the two main trails). However, *Lepanthes eltoroensis* has persisted through catastrophic events in the past, and we expect it to persist into the foreseeable future.

Representation

Because the species does not appear to have much physiological flexibility, given that it has a rather restricted distribution, representative units were not delineated for this species. The current condition of low genetic and environmental diversity, and little breadth to rely on if some plants are lost, is expected to continue under all scenarios, at least through the next 20 to 30 years. Available data suggest that conditions are present for genetic drift and inbreeding. However, *Lepanthes eltoroensis* has demonstrated the ability to adapt to changing environmental conditions (*i.e.,* natural disturbances) over time.

Recovery and Recovery Plan Implementation

Section 4(f) of the Act directs us to develop and implement recovery plans for the conservation and survival of endangered and threatened species unless we determine that such a plan will not promote the conservation of the species. Recovery plans are not regulatory documents. Rather, they are intended to establish goals for long-term conservation of a listed species and define criteria that are designed to indicate when the threats facing a species have been removed or reduced to such an extent that the species may no longer need the protections of the Act. Recovery plans also provide guidance to our Federal, State, and other governmental and nongovernmental partners on methods to minimize threats to listed species.

There are many paths to accomplishing recovery of a species, and recovery may be achieved without all criteria being fully met. For example, one or more criteria may have been exceeded while other criteria may not have been accomplished or become obsolete, yet the Service may judge that, overall, the threats have been minimized sufficiently, and the species is robust enough, to reclassify the species from endangered to threatened or perhaps delist the species. In other cases, recovery opportunities may be recognized that were not known at the time the recovery plan was finalized. These opportunities may be used instead of methods identified in the recovery plan.

Likewise, information on the species that was not known at the time the recovery plan was finalized may become available. The new information may change the extent that criteria need to be met for recognizing recovery of the species. Recovery of species is a dynamic process requiring adaptive management that may, or may not, fully follow the guidance provided in a recovery plan.

The following discussion provides a brief review of recovery planning and implementation for *Lepanthes eltoroensis,* as well as an analysis of the recovery criteria and goals as they relate to evaluating the status of this orchid.

The *Lepanthes eltoroensis* Recovery Plan was approved on July 15, 1996. The objective of the Recovery Plan is to provide direction for reversing the decline of this orchid and for restoring the species to a self-sustaining status, thereby permitting eventual removal from the Federal List of Endangered and Threatened Plants (USFWS 1996, p. 8). However, the Recovery Plan provides only criteria for reclassifying the species from endangered to threatened (''downlisting''). The specific criteria are: (1) Prepare and implement an agreement between the Service and the USFS concerning the protection of *L. eltoroensis* within El Yunque, and (2) establish new populations capable of self-perpetuation within protected areas (USFWS 1996, p. 8). The plan also

includes the following recovery actions intended to address threats to the species:

(1) Prevent further habitat loss and population decline;

(2) Continue to gather information on the species' distribution and abundance;

(3) Conduct research;

(4) Establish new populations; and

(5) Refine recovery criteria.

The following discussion provides specific details for each of these actions and the extent to which the recovery criteria have been met.

Recovery Action 1: Prevent Further Habitat Loss and Population Decline

This action has been met. In the past, the species' primary threat was identified as destruction and modification of habitat associated with forest management practices (*e.g.,* establishment and maintenance of plantations, selective cutting, trail maintenance, and shelter construction; 56 FR 60933, November 29, 1991). As described above under ''Forest Management Practices,'' the best available data indicates that forest management practices are no longer negatively affecting *Lepanthes eltoroensis.* Furthermore, the area where the species is found is within a protected area (El Yunque), part of which is the El Toro Wilderness designated in 2005, where the land is managed to preserve its natural conditions and species like *L. eltoroensis* (USFS 2016, p. 32). We expect this wilderness area will remain permanently protected as a nature reserve and be managed for conservation. Additionally, because this area is within a National Forest, the National Forest Management Act of 1976 (16 U.S.C. 1600 *et seq.*), requires El Yunque to develop management plans. As noted above, El Yunque plan specifically includes a set of standards and guidelines to protect the natural resources within the El Toro Wilderness. Moreover, Federal agencies are mandated to carry out programs for the conservation of endangered species under section 7 of the Act to ensure that any action authorized, funded, or carried out by a Federal agency is not likely to jeopardize the continued existence of a federally listed species. The USFS continually consults with the Service to avoid and minimize impacts to listed species and their habitat at El Yunque. *L. eltoroensis* shares habitat with other federally listed species (*e.g., Ilex sintenisii, Ternstroemia luquillensis,* and Elfin-woods warbler); thus, the USFS will continue to consult with the Service on projects that could affect listed species in this area. Additionally, since the species was listed in 1991, many more individuals have been found and observed growth has been stable with no documented decline in the population.

Recovery Action 2: Continue To Gather Information on the Species' Distribution and Abundance

This action has been met. Since the species was listed in 1991, several surveys for *Lepanthes eltoroensis* have been conducted. Although these surveys have been infrequent, sparse, and done with varying spatial spread and methodology, making the results difficult to compare over time, even partial surveys have found greater numbers of *L. eltoroensis.* Surveys have indicated stable growth rates. While the best available estimate of the metapopulation is 3,000 individuals, surveys likely underestimate the species' true abundance as suitable habitat off the two main trails are dangerous and mostly inaccessible, preventing additional surveys. Surveys of habitat outside traditional population sites may result in additional individuals.

Recovery Action 3: Conduct Research

This action has been met; however we continue to conduct research on the species. Information has been collected throughout the years on the distribution and dispersion patterns of *Lepanthes eltoroensis* (Tremblay 1997a, pp. 85–96), variance in floral morphology (Tremblay 1997b, pp. 38–45), and genetic differentiation (Tremblay and Ackerman 2001, pp. 47–62). In 2016, the Service and the PRDNER provided funding to researchers at the University of Puerto Rico to evaluate the current population status of *L. eltoroensis* and model its demographic variation in response to climatic variability (*i.e.,* temperature and relative humidity). This study is an effort to evaluate the influence that climate change will have on the persistence of this species in its environment. Results are anticipated to be available later in 2020 and will be factored into our final determination on this proposed rule. Data gathered during this project will also be used to characterize the microhabitat variation between areas with and without *L. eltoroensis* and develop a habitat selection model to evaluate the relationship between the presence and absence of plants and landscape-level variables such as elevation, forest type, aspect, and temperature. Additionally, these data will allow for development of a monitoring infrastructure to model the demographic responses of *L. eltoroensis* to climate variation. This research will update the distribution and status of *L. eltoroensis* within El Yunque, and assess natural threats, particularly climate change, affecting these populations. However, the best available data indicates that the species is projected to remain viable, and the results of the additional surveys, while helpful information, is not required.

Recovery Action 4: Establish New Populations

This action has not been met but is no longer necessary. At the time of listing, only 140 plants were thought to exist; we now estimate a population size of 3,000 individuals. The 2015 5-year status review of *Lepanthes eltoroensis* states that the action to establish new populations is not necessary at this time for the recovery of the species because additional sub-populations and individuals have been found since the species was listed (USFWS 2015, p. 5). Additionally, relocation of plants from fallen trees onto standing trees following hurricane events was found to be an effective management strategy to improve and maximize survival and reproductive success (Benítez and Tremblay 2003, pp. 67–69).

Recovery Action 5: Refine Recovery Criteria

This action has not been met but will no longer be necessary. The Recovery Plan states that as additional information on *Lepanthes eltoroensis* is gathered, it will be necessary to better define, and possibly modify, recovery criteria. Based on the information compiled in the SSA (USFWS 2019, entire) this orchid is projected to remain viable over time, such that it may no longer meet the definition of an endangered or threatened species (see **Determination**).

Recovery Criterion 1: Prepare and Implement and Agreement Between the Service and the USFS Concerning the Protection of Lepanthes eltoroensis Within El Yunque

This criterion has been partially met. Although there is not a specific agreement between the Service and the USFS concerning the protection of *Lepanthes eltoroensis,* the intent of this criterion—to provide long-term protection for the species—has been met. Existing populations and the species' habitat are protected. As stated before, this orchid species occurs within the El Toro Wilderness area where habitat destruction or modification is no longer considered a threat to the species or its habitat. The implementation of management practices in the forest has improved, no selective cutting is

conducted, and the USFS coordinates with the Service to avoid impacts to listed species as part of their management practices. Because this species overlaps with other listed species, the USFS will continue to consult on projects that may affect this area. Furthermore, Commonwealth laws and regulations protect the species' habitat as well as the species from collection and removal. There is no evidence that *L. eltoroensis* or its habitat is being negatively impacted; therefore, a formal agreement between the Service and the USFS is not necessary for protecting this species.

Recovery Criterion 2: Establish New Populations Capable of Self-Perpetuation Within Protected Areas

As stated under Recovery Action 4, we have found that the action to establish new populations is not necessary at this time for the recovery of the species because additional sub-populations and individuals have been found since the species was listed (USFWS 2015, p. 5). Additionally, relocation of plants is an effective management strategy to improve and maximize survival and reproductive success, as has been demonstrated after hurricane events (Benítez and Tremblay 2003, pp. 67–69).

Summary

The Recovery Plan for *Lepanthes eltoroensis* provided direction for reversing the decline of this species, thereby informing when the species may be delisted. The Recovery Plan outlined two criteria for reclassifying the species from endangered to threatened: (1) Prepare and implement an agreement between the Service and the USFS concerning the protection of *L. eltoroensis* within El Yunque, and (2) establish new populations capable of self-perpetuation within protected areas. Both of these criteria have been partially met or are no longer considered necessary. This species is protected by Commonwealth law and regulations, and will continue to be should the species no longer require Federal protection, and occurs within a protected wilderness area that will remain protected and managed using techniques that are beneficial for this and other co-occurring federally listed species. There is no evidence that *L. eltoroensis* or its habitat is being negatively impacted by forest management activities or will be in the future. Additionally, the designation of wilderness where the species occurs has eliminated the need for a formal agreement between the Service and the USFS to protect this species. Since the species was listed under the Act and the Recovery Plan was written, additional plants have been found; therefore, establishment of new populations is not necessary at this time for recovery. Additionally, the five recovery actions intended to address threats to the species have all been either met or determined to no longer be necessary for recovery.

Determination of Status of *Lepanthes eltoroensis*

Section 4 of the Act (16 U.S.C. 1533), and its implementing regulations (50 CFR part 424), set forth the procedures for determining whether a species meets the definition of ''endangered species'' or ''threatened species.'' The Act defines an ''endangered species'' as a species that is in danger of extinction throughout all or a significant portion of its range, and a ''threatened species'' as a species that is likely to become an endangered species within the foreseeable future throughout all or a significant portion of its range. The Act requires that we determine whether a species meets the definition of ''endangered species'' or ''threatened species'' because of any of the following factors: (A) The present or threatened destruction, modification, or curtailment of its habitat or range; (B) overutilization for commercial, recreational, scientific, or educational purposes; (C) disease or predation; (D) the inadequacy of existing regulatory mechanisms; or (E) other natural or manmade factors affecting its continued existence.

Status Throughout All of Its Range

After evaluating threats to the species and assessing the cumulative effect of the threats under the section 4(a)(1) factors, we note that more individuals are known to occur than at the time of listing. Additionally, the best metapopulation estimate of 3,000 individuals is likely an underestimate, as not all potential habitat has been surveyed. Despite the effects of a small population size, continued limited distribution, and evidence of low gene flow (Factor E), the species has persisted and adapted to changing environmental conditions. Forest management practices (Factor A) and collection (Factor B) are not currently a threat to this species, nor are they anticipated to negatively affect *Lepanthes eltoroensis* in the future. Although hurricanes (Factor E) have the potential to negatively impact growth rates and survival of *L. eltoroensis,* observed stable subpopulations, even after recent severe hurricanes, indicate this species has the ability to recover from these natural disturbances. Additionally, relocation of plants is a viable management strategy that can improve and maximize survival and reproduction success. The greatest threat to the future of *L. eltoroensis* is current and ongoing effects of climate change factors (Factor E); however, while changes to precipitation and drought, temperature, and life zones are expected to occur on Puerto Rico, within the foreseeable future, they are not predicted to be substantial, and the viability of the species is expected to remain stable. We anticipate small population dynamics (Factor E) will continue to be a concern, as there is already evidence of genetic drift, but *L.eltoroensis* has demonstrated the ability to adapt to changing environmental conditions over time at population levels lower than they are currently or projected to be in the future.

The species was originally listed as an endangered species due to its rarity, restricted distribution, specialized habitat, and vulnerability to habitat destruction or modification, as well as because of collection for commercial/recreational uses. We find that these threats are no longer affecting the status of the species as they have been minimized or eliminated. Partial surveys over the past 18 years, including surveys following two strong hurricanes in 2018, indicate there are more individuals than known at the time of listing, and the population appears to be relatively stable. Surveys are limited to detections right on the trails, or a very short distance from the trails. Habitat that has not or cannot be surveyed may hold additional subpopulations; therefore, surveys likely underestimate the true abundance of this species. The habitat at El Yunque, where the species occurs, is a designated wilderness area, and managed for its natural conditions; therefore, habitat modification or destruction is not a current threat. In addition, collection is prohibited under USFS regulations, and there is no indication this is a current threat to the species. Persistence of the species through repeated past strong hurricanes indicates the species has the ability to recover and adapt from disturbances. Furthermore, relocation of individuals from felled trees further accelerates the recovery of the species post-hurricane. While a narrow endemic, the species has continued to exist across its historical range with all life stages represented and in good health. While projections predict increasing temperatures and decreasing

precipitation over time into the future, projected impacts to the species' habitat (*e.g.,* life zone changes) are not expected to be significant within the foreseeable future (USFWS 2019, p. 69). Recent, yet unpublished downscaled climate modelling (Bowden 2018, pers. comm.) indicates that higher elevation areas, like those supporting *L. eltoroensis,* may be buffered from the more generally predicted level of precipitation changes. This species has also demonstrated the ability to adapt to changes in its environment. Since the species was listed, warming temperatures have been documented and precipitation levels have decreased, yet the species has persisted. Additionally, following strong hurricanes that affected the species' habitat, abundance has remained stable, with all age classes represented and in good health. While suitable habitat conditions for the species may contract some over the foreseeable future, the species is likely to continue to maintain close to current levels of resiliency, redundancy, and representation. We conclude that there are no existing or potential threats that, either alone or in combination with others (*i.e.,* forest management practices, climate change, and hurricane damage), are likely to cause the species' viability to decline. Thus, after assessing the best available data, we conclude that *L. eltoroensis* is not in danger of extinction throughout its range (*i.e.,* meets the definition of an endangered species) or likely to become so within the foreseeable future (*i.e.,* meets the definition of a threatened species).

Status Throughout a Significant Portion of Its Range

Under the Act and our implementing regulations, a species may warrant listing if it is in danger of extinction or likely to become so within the foreseeable future throughout all or a significant portion of its range.

Having determined that *Lepanthes eltoroensis* is not in danger of extinction or likely to become so within the foreseeable future throughout all of its range, we now consider whether it may be in danger of extinction or likely to become so within the foreseeable future in a significant portion of its range. The range of a species can theoretically be divided into portions in an infinite number of ways, so we first screen the potential portions of the species' range to determine if there are any portions that warrant further consideration. To do the ''screening'' analysis, we ask whether there are portions of the species' range for which there is substantial information indicating that: (1) The portion may be significant; and (2) the species may be, in that portion, either in danger of extinction or likely to become so in the foreseeable future. For a particular portion, if we cannot answer both questions in the affirmative, then that portion does not warrant further consideration and the species does not warrant listing because of its status in that portion of its range. Conversely, we emphasize that answering both of these questions in the affirmative is not a determination that the species is in danger of extinction or likely to become so in the foreseeable future throughout a significant portion of its range—rather, it is a step in determining whether a more detailed analysis of the issue is required.

If we answer these questions in the affirmative, we then conduct a more thorough analysis to determine whether the portion does indeed meet both of the ''significant portion of its range'' prongs: (1) The portion is significant; and (2) the species is, in that portion, either in danger of extinction or likely to become so in the foreseeable future. Confirmation that a portion does indeed meet one of these prongs does not create a presumption, prejudgment, or other determination as to whether the species is an endangered species or threatened species. Rather, we must then undertake a more detailed analysis of the other prong to make that determination. Only if the portion does indeed meet both prongs would the species warrant listing because of its status in a significant portion of its range.

We evaluated the range of the *Lepanthes eltoroensis* to determine if any area may be a significant portion of the range. The species is a narrow endemic that functions as a single, contiguous population (with a metapopulation structure) and occurs within a very small area (El Yunque, Puerto Rico). Every threat to the species in any portion of its range is a threat to the species throughout all of its range, and so the species has the same status under the Act throughout its narrow range. Therefore, we conclude, based on this screening analysis, that the species is not in danger of extinction or likely to become so in the foreseeable future in any significant portion of its range. Our conclusion—that we do not undertake additional analysis if we determine that the species has the same status under the Act throughout its narrow range—is consistent with the courts' holdings in *Desert Survivors* v. *Department of the Interior,* No. 16–cv–01165–JCS, 2018 WL 4053447 (N.D. Cal. Aug. 24, 2018); *Center for Biological Diversity* v. *Jewell,* 248 F. Supp. 3d, 946, 959 (D. Ariz. 2017); and *Center for Biological Diversity* v. *Everson,* 2020 WL 437289 (D.D.C. Jan. 28, 2020).

Determination of Status

Our review of the best available scientific and commercial data indicates that *Lepanthes eltoroensis* does not meet the definition of an endangered species or a threatened species in accordance with sections 3(6) and 3(20) of the Act. Therefore, we propose to remove this species from the Federal List of Endangered and Threatened Plants.

Effects of This Proposed Rule

This proposal, if made final, would revise 50 CFR 17.12(h) to remove *Lepanthes eltoroensis* from the Federal List of Endangered and Threatened Plants. Therefore, revision of the species' recovery plan is not necessary. The prohibitions and conservation measures provided by the Act, particularly through sections 7 and 9, would no longer apply to this species. Federal agencies would no longer be required to consult with the Service under section 7 of the Act in the event that activities they authorize, fund, or carry out may affect *L. eltoroensis.* There is no critical habitat designated for this species.

Post-Delisting Monitoring

Section 4(g)(1) of the Act requires us to monitor for not less than 5 years the status of all species that are delisted due to recovery. Post-delisting monitoring refers to activities undertaken to verify that a species delisted due to recovery remains secure from the risk of extinction after the protections of the Act no longer apply. The primary goal of PDM is to monitor the species to ensure that its status does not deteriorate, and if a decline is detected, to take measures to halt the decline so that proposing it as an endangered or threatened species is not again needed. If at any time during the monitoring period data indicate that protective status under the Act should be reinstated, we can initiate listing procedures, including, if appropriate, emergency listing. At the conclusion of the monitoring period, we will review all available information to determine if relisting, the continuation of monitoring, or the termination of monitoring is appropriate.

Section 4(g) of the Act explicitly requires that we cooperate with the States in development and implementation of PDM programs. However, we remain ultimately responsible for compliance with section 4(g) and, therefore, must remain actively engaged in all phases of PDM. We also seek active participation of other

entities that are expected to assume responsibilities for the species' conservation after delisting. The Service is currently coordinating with PRDNER and USFS on the completion of the PDM.

We have prepared a draft PDM plan for the orchid, *Lepanthes eltoroensis.* The plan is designed to detect substantial declines in the species, with reasonable certainty and precision, or an increase in threats. The plan:

(1) Summarizes the species' status at the time of proposed delisting;

(2) Defines thresholds or triggers for potential monitoring outcomes and conclusions;

(3) Lays out frequency and duration of monitoring;

(4) Articulates monitoring methods, including sampling considerations;

(5) Outlines data compilation and reporting procedures and responsibilities; and

(6) Proposes a PDM implementation schedule, funding, and responsible parties.

Concurrent with this proposed delisting rule, we announce the availability of the draft PDM plan for public review at *http://www.regulations.gov* under Docket No. FWS–R4–ES–2019–0073. The plan can also be viewed in its entirety at *https://www.fws.gov/southeast/caribbean/.* Copies can also be obtained from the U.S. Fish and Wildlife Service, Caribbean Ecological Services Field Office (see **FOR FURTHER INFORMATION CONTACT**). We seek information, data, and comments from the public regarding *Lepanthes eltoroensis* and the PDM plan. We are also seeking peer review of the draft PDM plan during this proposed rule's comment period. We anticipate finalizing this plan, considering all public and peer review comments, prior to making a final determination on the proposed delisting rule.

Required Determinations

Clarity of the Rule

We are required by Executive Orders 12866 and 12988 and by the Presidential Memorandum of June 1, 1998, to write all rules in plain language. This means that each rule we publish must:

(1) Be logically organized;

(2) Use the active voice to address readers directly;

(3) Use clear language rather than jargon;

(4) Be divided into short sections and sentences; and

(5) Use lists and tables wherever possible.

If you feel that we have not met these requirements, send us comments by one of the methods listed in **ADDRESSES**. To better help us revise the rule, your comments should be as specific as possible. For example, you should tell us the numbers of the sections or paragraphs that are unclearly written, which sections or sentences are too long, the sections where you feel lists or tables would be useful, etc.

National Environmental Policy Act (42 U.S.C. 4321 et seq.)

We determined that we do not need to prepare an environmental assessment or an environmental impact statements, as defined under the authority of the National Environmental Policy Act of 1969 (42 U.S.C. 4321 *et seq.*), in connection with regulations adopted pursuant to section 4(a) of the Endangered Species Act. We published a notice outlining our reasons for this determination in the **Federal Register** October 25, 1983 (48 FR 49244).

Government-to-Government Relationship With Tribes

In accordance with the President's memorandum of April 29, 1994 (Government-to-Government Relations with Native American Tribal Governments; 59 FR 22951), Executive Order 13175 (Consultation and Coordination With Indian Tribal Governments), and the Department of the Interior's manual at 512 DM 2, we readily acknowledge our responsibility to communicate meaningfully with recognized Federal Tribes on a government-to-government basis. We have determined that there are no tribal interests affected by this proposal.

References Cited

A complete list of references cited in this rulemaking is available on the internet at *http://www.regulations.gov* under Docket No. FWS–R4–ES–2019–0073 and upon request from the Caribbean Ecological Services Field Office (see **FOR FURTHER INFORMATION CONTACT**).

Authors

The primary authors of this proposed rule are the staff members of the Service's Species Assessment Team and the Caribbean Ecological Services Field Office.

List of Subjects in 50 CFR Part 17

Endangered and threatened species, Exports, Imports, Reporting and recordkeeping requirements, Transportation.

Proposed Regulation Promulgation

Accordingly, we propose to amend part 17, subchapter B of chapter I, title 50 of the Code of Federal Regulations, as set forth below:

PART 17—ENDANGERED AND THREATENED WILDLIFE AND PLANTS

■ 1. The authority citation for part 17 continues to read as follows:

Authority: 16 U.S.C. 1361–1407; 1531–1544; and 4201–4245, unless otherwise noted.

§ 17.12 [Amended]

■ 2. Amend § 17.12(h) by removing the entry for ''*Lepanthes eltoroensis*'' under FLOWERING PLANTS from the List of Endangered and Threatened Plants.

Dated: January 23, 2020.

Aurelia Skipwith,

Director, U.S. Fish and Wildlife Service.

[FR Doc. 2020–04824 Filed 3–9–20; 8:45 am]

BILLING CODE 4333–15–P

Notices

Federal Register
Vol. 85, No. 47
Tuesday, March 10, 2020

This section of the FEDERAL REGISTER contains documents other than rules or proposed rules that are applicable to the public. Notices of hearings and investigations, committee meetings, agency decisions and rulings, delegations of authority, filing of petitions and applications and agency statements of organization and functions are examples of documents appearing in this section.

DEPARTMENT OF AGRICULTURE

Submission for OMB Review; Comment Request

March 5, 2020.

The Department of Agriculture has submitted the following information collection requirement(s) to OMB for review and clearance under the Paperwork Reduction Act of 1995, Public Law 104–13. Comments are requested regarding; whether the collection of information is necessary for the proper performance of the functions of the agency, including whether the information will have practical utility; the accuracy of the agency's estimate of burden including the validity of the methodology and assumptions used; ways to enhance the quality, utility and clarity of the information to be collected; and ways to minimize the burden of the collection of information on those who are to respond, including through the use of appropriate automated, electronic, mechanical, or other technological collection techniques or other forms of information technology.

Comments regarding this information collection received by April 9, 2020 will be considered. Written comments should be addressed to: Desk Officer for Agriculture, Office of Information and Regulatory Affairs, Office of Management and Budget (OMB), *OIRA_Submission@omb.eop.gov* or fax (202) 395–5806 and to Departmental Clearance Office, USDA, OCIO, Mail Stop 7602, Washington, DC 20250–7602. Copies of the submission(s) may be obtained by calling (202) 720–8958.

An agency may not conduct or sponsor a collection of information unless the collection of information displays a currently valid OMB control number and the agency informs potential persons who are to respond to the collection of information that such persons are not required to respond to the collection of information unless it displays a currently valid OMB control number.

Food and Nutrition Service

Title: Quality Control Review Schedule.

OMB Control Number: 0584–0299.

Summary of Collection: States agencies are required to perform Quality Control (QC) review for the Supplemental Nutrition Assistance Program (SNAP). The FNS–380–1, Quality Control Review Schedule is for State use to collect both QC data and case characteristics for SNAP and to serve as the comprehensive data entry form for SNAP QC reviews. The legislative basis for the operation of the QC system is provided by Section 16 of the Food and Nutrition Act of 2008, as amended.

Need and Use of the Information: The Food and Nutrition Service (FNS) will collect information to monitor and reduce errors, develop policy strategies, and analyze household characteristic data. In addition, FNS will use the data to determine sanctions and bonus payments based on error rate performance, and to estimate the impact of some program changes to SNAP participation and costs by analyzing the available household characteristic data.

Description of Respondents: State, Local and Tribal Government.

Number of Respondents: 53.

Frequency of Responses: 1,074.

Estimated Total Burden Hours: 49,118.

Food and Nutrition Service

Title: Supplemental Nutrition Assistance Program: State Options.

OMB Control Number: 0584–0496.

Summary of Collection: The Food, Conservation and Energy Act of 2008, Public Law 110–246, Section 4001–4002, amended the Food and Nutrition Act of 2008 to rename the Food Stamp Program the ''Supplemental Nutrition Assistance Program (SNAP). The Act establishes SNAP as a means-tested program under which needy households may apply for and receive assistance to supplement their ability to purchase food. The Act specifies national eligibility standards utility allowance (SUAs) and imposes certain administrative requirements on State agencies in administering the program. The program is directly administered by State welfare agencies, which are responsible for determining the eligibility of applicant households and issuing benefits to those households entitled to benefits under the Act.

Need and Use of the Information: FNS will collect and approve information from State agencies on how the various SNAP develop, update, change and implement options will be determined for SUAs for household. The information collected will be used by FNS to establish quality control reviews, standards and self-employment costs.

Description of Respondents: State, Local or Tribal Government.

Number of Respondents: 53.

Frequency of Responses: Recordkeeping; Reporting: Annually.

Total Burden Hours: 746.

Ruth Brown,

Departmental Information Collection Clearance Officer.

[FR Doc. 2020–04839 Filed 3–9–20; 8:45 am]

BILLING CODE 3410–30–P

DEPARTMENT OF AGRICULTURE

Forest Service

Pacific Northwest Region Recreation Advisory Committee

AGENCY: Forest Service, USDA.

ACTION: Call for nominations to the Pacific Northwest Region Recreation Resource Advisory Committee.

SUMMARY: The United States Department of Agriculture (USDA) is seeking nominations for the Pacific Northwest Region Recreation Advisory Committee (Recreation RAC) pursuant to the Federal Lands Recreation Enhancement Act (REA) and the Federal Advisory Committee Act (FACA). Additional information on the Recreation RAC can be found by visiting the Recreation RAC's website at: *https://www.fs.usda.gov/detail/r6/passes-permits/recreation/?cid=fsbdev2_026879*.

DATES: Nominations must be received on or before April 9, 2020. The timeframe may be extended if officials do not receive applications for vacancies. Nominations must contain a completed application packet that includes the nominee's name, a narrative statement on each Nominee Evaluation Criteria, and completed Form AD–755, Advisory Committee or Research and Promotion Background

Information. The package must be sent to the addresses below.

ADDRESSES: Interested persons may submit nominations packets by U.S. Mail to the Forest Service Pacific Northwest Regional Office, 1220 Southwest 3rd Avenue, Post Office Box 3623, Portland, Oregon 97204–2825, Attention: Krystal Fleeger or by Express Delivery to the Forest Service Pacific Northwest Regional Office, 1220 Southwest 3rd Avenue, 17th Floor, Portland, Oregon 97204–2825, Attention: Krystal Fleeger.

FOR FURTHER INFORMATION: Tracy Tophooven, Recreation RAC Designated Federal Officer, Pacific Northwest Region, USDA Forest Service, 1220 Southwest 3rd Avenue, 17th Floor, Portland, Oregon 97204–2825; by phone at (503) 808–2919, or by email at *R6_Recreation_RAC@fs.fed.us*.

SUPPLEMENTARY INFORMATION:

Background

In accordance with the provisions of FACA, the Secretary of Agriculture is seeking nominations for the purpose of providing recommendations on recreation fees. The Federal Lands Recreation Enhancement Act (REA), signed in December 2004, directs the Secretary of Agriculture, the Secretary of the Interior, or both to establish Recreation RACs, or use existing advisory committees to perform the duties of Recreation RACs, in each State or region for Federal recreation lands and waters managed by the Forest Service or the Bureau of Land Management (BLM). These committees make recreation fee program recommendations on implementing or eliminating standard amenity fees; expanded amenity fees; and noncommercial, individual special recreation permit fees; expanding or limiting the recreation fee program; and fee-level changes.

The REA grants flexibility to Recreation RACs by stating that the Secretaries:

- May have as many additional Recreation RACs in a State or region as the Secretaries consider necessary;
- Shall not establish a Recreation RAC in a State if the Secretaries determine, in consultation with the Governor of the State, that sufficient interest does not exist to ensure that participation on the committee is balanced in terms of the points of view represented and the functions to be performed; or
- May use a resource advisory committee established pursuant to another provision of law and in accordance with that law.

Recreation Resource Advisory Committee Membership

The Pacific Northwest Region Recreation RAC shall be comprised of no more than 11 members. Members will be appointed by the Secretary of Agriculture to serve two to three-year terms. Committee membership will be fairly balanced in terms of the points of view represented and functions to be performed. The Pacific Northwest Region Recreation RAC shall include representation in the following areas:

(1) Five persons who represent recreation users and that include, as appropriate, persons representing—

(a) Camping;

(b) Wildlife Viewing/Visiting Interpretive Sites;

(c) Summer motorized recreation such as motorcycling, boating, and off-highway vehicle driving;

(d) Summer nonmotorized recreation such as backpacking, horseback riding, mountain biking, canoeing, and rafting; and

(e) Hunting and fishing.

(2) Three persons who represent interest groups that include, as appropriate—

(a) Motorized/Non-motorized outfitters and guides;

(b) Motorized/Non-motorized outfitters and guides; and

(c) Local environmental groups.

(3) Three persons who are—

(a) State tourism official representing the State;

(b) A representative of affected Indian tribes; and

(c) A representative of affected local government interests.

In the event that a vacancy arises, the Designated Federal Officer (DFO) may fill the vacancy in the manner in which the original appointments were made. In accordance with REA, members of the Recreation RAC shall serve without compensation. Recreation RAC members may be allowed travel expenses and per diem for attendance at committee meetings, subject to approval of the DFO responsible for adminstrative support to the Recreation RAC.

Nominations and Application Information

The appointment of members to the Recreation RAC will be made by the Secretary of Agriculture. The public is invited to submit nomimations for membership on the Recreation RAC, either as a self-nomination or a nomination of any qualified and interested person. Any individual or organization may nominate one or more qualified persons to represent the interest areas listed above. To be considered for membership, nominees must:

1. Identify what interest group they would represent and how they are qualified to represent that group;
2. State why they want to serve on the committee and what they can contribute;
3. Provide an attachment showing their past experience in working successfully as part of a collaborative group; and
4. Complete an application packet, including evaluation criteria, and Form AD–755, Advisory Committee or Research and Promotion Background Information. The packet may be obtained by contacting Tracy Tophooven, Recreation RAC Designated Federal Officer, Pacific Northwest Region, USDA Forest Service, 1220 Southwest 3rd Avenue, 17th Floor, Portland, Oregon 97204–2825; by phone at (503) 808–2919, or by email at *R6_Recreation_RAC@fs.fed.us*. The packet can also be found by visiting the following website: *https://www.fs.usda.gov/detail/r6/passes-permits/recreation/?cid=fsbdev2_026879*. Nominations and completed applications for the Recreation RAC should be sent to the DFO. All nominations will be vetted by the Agency.

Equal opportunity practices in accordance with USDA policies shall be followed in all appointments to the Pacific Northwest Region Recreation RACs. To ensure that the recommendations of the Recreation RAC have taken into account the needs of the diverse groups served by USDA, membership will, to the extent practicable, include individuals with demonstrated ability to represent all racial and ethnic groups, women and men, and persons with disabilities.

Dated: February 26, 2020.

Cikena Reid,

Committee Management Officer, USDA.

[FR Doc. 2020–04783 Filed 3–9–20; 8:45 am]

BILLING CODE 3411–15–P

COMMISSION ON CIVIL RIGHTS

Notice of Public Meeting of the Washington Advisory Committee

AGENCY: U.S. Commission on Civil Rights.

ACTION: Announcement of meeting.

SUMMARY: Notice is hereby given, pursuant to the provisions of the rules and regulations of the U.S. Commission on Civil Rights (Commission) and the

Federal Advisory Committee Act that the Washington Advisory Committee (Committee) will hold a meeting via teleconference on Wednesday, March 25, 2020 at 11:30 p.m. Pacific Time. The purpose of the meeting for the Committee to discuss their upcoming hearing on Voting Rights and Felony Convictions in Washington.

DATES: The meeting will be held on Wednesday, March 25, 2020 at 11:30 a.m. PT.

Public Call Information: Dial: 800–353–6461, Conference ID: 3917702.

FOR FURTHER INFORMATION CONTACT: Brooke Peery, DFO, at *bpeery@usccr.gov* or (213) 894–3437.

SUPPLEMENTARY INFORMATION: Members of the public may listen to the discussion. This meeting is available to the public through the above listed toll free number. An open comment period will be provided to allow members of the public to make a statement as time allows. The conference call operator will ask callers to identify themselves, the organization they are affiliated with (if any), and an email address prior to placing callers into the conference room. Callers can expect to incur regular charges for calls they initiate over wireless lines, according to their wireless plan. The Commission will not refund any incurred charges. Callers will incur no charge for calls they initiate over land-line connections to the toll-free telephone number. Persons with hearing impairments may also follow the proceedings by first calling the Federal Relay Service at 1–800–877–8339 and providing the Service with the conference call number and conference ID number.

Members of the public are also entitled to submit written comments; the comments must be received in the regional office within 30 days following the meeting. Written comments may be mailed to the Regional Programs Unit Office, U.S. Commission on Civil Rights, 300 N Los Angeles St., Suite 2010, Los Angeles, CA 90012. They may also be faxed to the Commission at (213) 894–0508, or emailed to Angelica Trevino at *atrevino@usccr.gov.* Persons who desire additional information may contact the Regional Programs Unit Office at (213) 894–3437.

Records generated from this meeting may be inspected and reproduced at the Regional Programs Unit Office, as they become available, both before and after the meeting. Records of the meeting will be available at: *https://www.facadatabase.gov/FACA/apex/FACAPublicCommittee?id=a10t0000001gzmYAAQ.*

Please click on the ''Meeting Details'' and ''Documents'' links. Persons interested in the work of this Committee are also directed to the Commission's website, *http://www.usccr.gov,* or may contact the Regional Programs Unit office at the above email or street address.

Agenda

Roll Call
Approval of Minutes from March 4, 2020
Discussion of Hearing on Voting Rights in Washington
Public Comment
Adjournment

Dated: March 4, 2020.

David Mussatt,

Supervisory Chief, Regional Programs Unit.

[FR Doc. 2020–04804 Filed 3–9–20; 8:45 am]

BILLING CODE P

COMMISSION ON CIVIL RIGHTS

Notice of Public Meeting of the Florida Advisory Committee

AGENCY: U.S. Commission on Civil Rights.

ACTION: Announcement of meeting.

SUMMARY: Notice is hereby given, pursuant to the provisions of the rules and regulations of the U.S. Commission on Civil Rights (Commission) and the Federal Advisory Committee Act that the Florida Advisory Committee (Committee) will hold a meeting via web-conference on Tuesday March 24, 2020 at 3:00 p.m. (Eastern) for the purpose of hearing testimony regarding voting rights in Florida.

DATES: The meeting will be held on Tuesday March 24, 2020, from 3:00—4:30 p.m. Eastern.

Online Registration: https://cc.readytalk.com/r/ux645y5dc187&eom.

FOR FURTHER INFORMATION CONTACT: Melissa Wojnaroski, DFO, at *mwojnaroski@usccr.gov* or 312–353–8311.

SUPPLEMENTARY INFORMATION: Members of the public may participate in the discussion. This meeting is available to the public through the above online registration link. An open comment period will be provided to allow members of the public to make a statement as time allows. The conference call operator will ask callers to identify themselves, the organization they are affiliated with (if any), and an email address prior to placing callers into the conference room. Callers can expect to incur regular charges for calls they initiate over wireless lines, according to their wireless plan. The Commission will not refund any incurred charges. Callers will incur no charge for calls they initiate over land-line connections to the toll-free telephone number. Persons with hearing impairments may also follow the proceedings by first calling the Federal Relay Service at 1–800–877–8339 and providing the Service with the conference call number and conference ID number (provided via email upon registration).

Written comments may be mailed to the Regional Program Unit Office, U.S. Commission on Civil Rights, 230 S Dearborn St., Suite 2120, Chicago, IL 60604. They may also be faxed to the Commission at (312) 353–8324 or may be emailed to Carolyn Allen at *callen@usccr.gov.* Records of the meeting will be available via *www.facadatabase.gov* under the Commission on Civil Rights, Florida Advisory Committee link. Persons interested in the work of this Committee are directed to the Commission's website, *http://www.usccr.gov,* or may contact the Regional Program Unit at the above email or street address.

Agenda

Welcome and Roll Call
Discussion: Voting Rights in Florida
Public Comment
Adjournment

Dated: March 4, 2020.

David Mussatt,

Supervisory Chief,

Regional Programs Unit.

[FR Doc. 2020–04794 Filed 3–9–20; 8:45 am]

BILLING CODE P

DEPARTMENT OF COMMERCE

Foreign-Trade Zones Board

[B–12–2020]

Foreign-Trade Zone (FTZ) 87—Lake Charles, Louisiana, Notification of Proposed Production Activity, Lake Charles LNG Export Company, LLC (Liquified Natural Gas Processing), Lake Charles, Louisiana

Lake Charles LNG Export Company, LLC (Lake Charles LNG) submitted a notification of proposed production activity to the FTZ Board for its facility in Lake Charles, Louisiana. The notification conforming to the requirements of the regulations of the FTZ Board (15 CFR 400.22) was received on February 24, 2020.

The applicant indicates that the grantee will be submitting a separate application for FTZ designation at the

company's facility under FTZ 87. The facility is used for liquified natural gas processing. Pursuant to 15 CFR 400.14(b), FTZ activity would be limited to the specific foreign-status material and specific finished products described in the submitted notification (as described below) and subsequently authorized by the FTZ Board.

Production under FTZ procedures could exempt Lake Charles LNG from customs duty payments on the foreign-status material used in export production. On its domestic sales, for the foreign-status material noted below, Lake Charles LNG would be able to choose the duty rates during customs entry procedures that apply to liquified natural gas and stabilized gas condensate (duty rates are duty-free and 10.5 cents/barrel, respectively). Lake Charles LNG would be able to avoid duty on foreign-status material which becomes scrap/waste. Customs duties also could possibly be deferred or reduced on foreign-status production equipment.

The material sourced from abroad is gaseous natural gas (duty-free). The request indicates that gaseous natural gas is subject to special duties under Section 301 of the Trade Act of 1974 (Section 301), depending on the country of origin. The applicable Section 301 decisions require subject merchandise to be admitted to FTZs in privileged foreign status (19 CFR 146.41).

Public comment is invited from interested parties. Submissions shall be addressed to the Board's Executive Secretary and sent to: *ftz@trade.gov.* The closing period for their receipt is April 20, 2020.

A copy of the notification will be available for public inspection in the ''Reading Room'' section of the Board's website, which is accessible via *www.trade.gov/ftz.*

For further information, contact Diane Finver at *Diane.Finver@trade.gov* or (202) 482–1367.

Dated: March 3, 2020.

Andrew McGilvray,

Executive Secretary.

[FR Doc. 2020–04840 Filed 3–9–20; 8:45 am]

BILLING CODE 3510–DS–P

DEPARTMENT OF COMMERCE

International Trade Administration

Initiation of Antidumping and Countervailing Duty Administrative Reviews

AGENCY: Enforcement and Compliance, International Trade Administration, Department of Commerce.

SUMMARY: The Department of Commerce (Commerce) has received requests to conduct administrative reviews of various antidumping duty (AD) and countervailing duty (CVD) orders and findings with January anniversary dates. In accordance with Commerce's regulations, we are initiating those administrative reviews.

DATES: Applicable March 10, 2020.

FOR FURTHER INFORMATION CONTACT: Brenda E. Brown, AD/CVD Operations, Customs Liaison Unit, Enforcement and Compliance, International Trade Administration, U.S. Department of Commerce, 1401 Constitution Avenue NW, Washington, DC 20230, telephone: (202) 482–4735.

SUPPLEMENTARY INFORMATION:

Background

Commerce has received timely requests, in accordance with 19 CFR 351.213(b), for administrative reviews of various AD and CVD orders and findings with January anniversary dates.

All deadlines for the submission of various types of information, certifications, or comments or actions by Commerce discussed below refer to the number of calendar days from the applicable starting time.

Notice of No Sales

If a producer or exporter named in this notice of initiation had no exports, sales, or entries during the period of review (POR), it must notify Commerce within 30 days of publication of this notice in the **Federal Register**. All submissions must be filed electronically at *https://access.trade.gov* in accordance with 19 CFR 351.303.[1] Such submissions are subject to verification in accordance with section 782(i) of the Tariff Act of 1930, as amended (the Act). Further, in accordance with 19 CFR 351.303(f)(1)(i), a copy must be served on every party on Commerce's service list.

Respondent Selection

In the event Commerce limits the number of respondents for individual examination for administrative reviews initiated pursuant to requests made for the orders identified below, except for the administrative review of the antidumping duty order on wooden bedroom furniture from the People's Republic of China (China), Commerce intends to select respondents based on U.S. Customs and Border Protection (CBP) data for U.S. imports during the POR. We intend to place the CBP data on the record within five days of publication of the initiation notice and to make our decision regarding respondent selection within 30 days of publication of the initiation **Federal Register** notice. Comments regarding the CBP data and respondent selection should be submitted within seven days after the placement of the CBP data on the record of this review. Parties wishing to submit rebuttal comments should submit those comments within five days after the deadline for the initial comments.

In the event Commerce decides it is necessary to limit individual examination of respondents and conduct respondent selection under section 777A(c)(2) of the Act, the following guidelines regarding collapsing of companies for purposes of respondent selection will apply. In general, Commerce has found that determinations concerning whether particular companies should be ''collapsed'' (*e.g.,* treated as a single entity for purposes of calculating antidumping duty rates) require a substantial amount of detailed information and analysis, which often require follow-up questions and analysis. Accordingly, Commerce will not conduct collapsing analyses at the respondent selection phase of this review and will not collapse companies at the respondent selection phase unless there has been a determination to collapse certain companies in a previous segment of this AD proceeding (*e.g.,* investigation, administrative review, new shipper review, or changed circumstances review). For any company subject to this review, if Commerce determined, or continued to treat, that company as collapsed with others, Commerce will assume that such companies continue to operate in the same manner and will collapse them for respondent selection purposes. Otherwise, Commerce will not collapse companies for purposes of respondent selection. Parties are requested to (a) identify which companies subject to review previously were collapsed, and (b) provide a citation to the proceeding in which they were collapsed. Further, if companies are requested to complete the Quantity and Value (Q&V) Questionnaire for purposes of respondent selection, in general, each company must report volume and value data separately for itself. Parties should not include data for any other party, even if they believe they should be treated as a single entity with that other party. If a company was collapsed with another company or companies in the

[1] *See Antidumping and Countervailing Duty Proceedings: Electronic Filing Procedures; Administrative Protective Order Procedures,* 76 FR 39263 (July 6, 2011).

most recently completed segment of this proceeding where Commerce considered collapsing that entity, complete Q&V data for that collapsed entity must be submitted.

Respondent Selection—Wooden Bedroom Furniture From China

In the event that Commerce limits the number of respondents for individual examination in the antidumping duty administrative review of wooden bedroom furniture from China, for the purposes of this segment of the proceeding, *i.e.,* the 2019 review period, Commerce intends to select respondents based on volume data contained in responses to a Q&V Questionnaire. All parties are hereby notified that they must timely respond to the Q&V Questionnaire. Commerce's Q&V Questionnaire along with certain additional questions will be available in a document package on Commerce's website at *https://enforcement.trade.gov/download/prc-wbf/index.html* on the date this notice is published. The responses to the Q&V Questionnaire should be filed with the respondents' Separate Rate Application or Separate Rate Certification (*see* the Separate Rates section below) and their response to the additional questions and must be received by Commerce by no later than 30 days after publication of this notice. Please be advised that due to the time constraints imposed by the statutory and regulatory deadlines for antidumping duty administrative reviews, Commerce does not intend to grant any extensions for the submission of responses to the Q&V Questionnaire.

Deadline for Withdrawal of Request for Administrative Review

Pursuant to 19 CFR 351.213(d)(1), a party that has requested a review may withdraw that request within 90 days of the date of publication of the notice of initiation of the requested review. The regulation provides that Commerce may extend this time if it is reasonable to do so. Determinations by Commerce to extend the 90-day deadline will be made on a case-by-case basis.

Deadline for Particular Market Situation Allegation

Section 504 of the Trade Preferences Extension Act of 2015 amended the Act by adding the concept of a particular market situation (PMS) for purposes of constructed value under section 773(e) of the Act.[2] Section 773(e) of the Act states that ''if a particular market situation exists such that the cost of materials and fabrication or other processing of any kind does not accurately reflect the cost of production in the ordinary course of trade, the administering authority may use another calculation methodology under this subtitle or any other calculation methodology.'' When an interested party submits a PMS allegation pursuant to section 773(e) of the Act, Commerce will respond to such a submission consistent with 19 CFR 351.301(c)(2)(v). If Commerce finds that a PMS exists under section 773(e) of the Act, then it will modify its dumping calculations appropriately.

Neither section 773(e) of the Act nor 19 CFR 351.301(c)(2)(v) set a deadline for the submission of PMS allegations and supporting factual information. However, in order to administer section 773(e) of the Act, Commerce must receive PMS allegations and supporting factual information with enough time to consider the submission. Thus, should an interested party wish to submit a PMS allegation and supporting new factual information pursuant to section 773(e) of the Act, it must do so no later than 20 days after submission of initial responses to section D of the questionnaire.

Separate Rates

In proceedings involving non-market economy (NME) countries, Commerce begins with a rebuttable presumption that all companies within the country are subject to government control and, thus, should be assigned a single antidumping duty deposit rate. It is Commerce's policy to assign all exporters of merchandise subject to an administrative review in an NME country this single rate unless an exporter can demonstrate that it is sufficiently independent so as to be entitled to a separate rate.

To establish whether a firm is sufficiently independent from government control of its export activities to be entitled to a separate rate, Commerce analyzes each entity exporting the subject merchandise. In accordance with the separate rates criteria, Commerce assigns separate rates to companies in NME cases only if respondents can demonstrate the absence of both *de jure* and *de facto* government control over export activities.

All firms listed below that wish to qualify for separate rate status in the administrative reviews involving NME countries must complete, as appropriate, either a separate rate application or certification, as described below. In addition, all firms that wish to qualify for separate-rate status in the antidumping duty administrative review of wooden bedroom furniture from China must complete, as appropriate, either a Separate Rate Certification or Application, as described below, and respond to the additional questions and the Q&V Questionnaire on Commerce's website at *https://enforcement.trade.gov/download/prc-wbf/index.html.* For these administrative reviews, in order to demonstrate separate rate eligibility, Commerce requires entities for whom a review was requested, that were assigned a separate rate in the most recent segment of this proceeding in which they participated, to certify that they continue to meet the criteria for obtaining a separate rate. The Separate Rate Certification form will be available on Commerce's website at *https://enforcement.trade.gov/nme/nme-sep-rate.html* on the date of publication of this **Federal Register** notice. In responding to the certification, please follow the ''Instructions for Filing the Certification'' in the Separate Rate Certification. Separate Rate Certifications are due to Commerce no later than 30 calendar days after publication of this **Federal Register** notice. For the antidumping duty administrative review of wooden bedroom furniture from China, Separate Rate Certifications, as well as a response to the Q&V Questionnaire and the additional questions in the document package, are due to Commerce no later than 30 calendar days after publication of this **Federal Register** notice. The deadline and requirement for submitting a Certification applies equally to NME-owned firms, wholly foreign-owned firms, and foreign sellers who purchase and export subject merchandise to the United States.

Entities that currently do not have a separate rate from a completed segment of the proceeding[3] should timely file a Separate Rate Application to demonstrate eligibility for a separate rate in this proceeding. In addition, companies that received a separate rate in a completed segment of the proceeding that have subsequently made changes, including, but not limited to, changes to corporate structure, acquisitions of new companies or facilities, or changes to

[2] *See* Trade Preferences Extension Act of 2015, Public Law 114–27, 129 Stat. 362 (2015).

[3] Such entities include entities that have not participated in the proceeding, entities that were preliminarily granted a separate rate in any currently incomplete segment of the proceeding (*e.g.,* an ongoing administrative review, new shipper review, *etc.*) and entities that lost their separate rate in the most recently completed segment of the proceeding in which they participated.

their official company name,[4] should timely file a Separate Rate Application to demonstrate eligibility for a separate rate in this proceeding. The Separate Rate Application will be available on Commerce's website at *https://enforcement.trade.gov/nme/nme-sep-rate.html* on the date of publication of this **Federal Register** notice. In responding to the Separate Rate Application, refer to the instructions contained in the application. Separate Rate Applications are due to Commerce no later than 30 calendar days after publication of this **Federal Register** notice. For the antidumping duty administrative review of wooden bedroom furniture from China, Separate Rate Status Applications, as well as a response to the Q&V Questionnaire and the additional questions in the document package, are due to Commerce no later than 30 calendar days after publication of this **Federal Register** notice. The deadline and requirement for submitting a Separate Rate Application applies equally to NME-owned firms, wholly foreign-owned firms, and foreign sellers that purchase and export subject merchandise to the United States.

For exporters and producers who submit a Separate Rate Application or Certification and subsequently are selected as mandatory respondents, these exporters and producers will no longer be eligible for separate rate status unless they respond to all parts of the questionnaire as mandatory respondents.

Furthermore, this notice constitutes public notification to all firms for which an antidumping duty administrative review of wooden bedroom furniture from China has been requested, and that are seeking separate rate status in the review, that they must submit a timely Separate Rate Application or Certification (as appropriate) as described above, and a timely response to the Q&V Questionnaire and the additional questions in the document package on Commerce's website in order to receive consideration for separate-rate status. In other words, Commerce will not give consideration to any timely Separate Rate Certification or Application made by parties who failed to respond in a timely manner to the Q&V Questionnaire and the additional questions. All information submitted by respondents in the antidumping duty administrative review of wooden bedroom furniture from China is subject to verification. As noted above, the Separate Rate Certification, the Separate Rate Application, the Q&V Questionnaire, and the additional questions will be available on Commerce's website on the date of publication of this notice in the **Federal Register**.

Initiation of Reviews

In accordance with 19 CFR 351.221(c)(1)(i), we are initiating administrative reviews of the following AD and CVD orders and findings. We intend to issue the final results of these reviews not later than January 31, 2021.

	Period to be reviewed
AD Proceedings	
Canada: Certain Softwood Lumber Products, A–122–857	1/1/19–12/31/19
0729670 B.C. Ltd. DBA Anderson Sales	
1074712 BC Ltd.	
258258 B.C. Ltd., dba Pacific Coast Cedar Products	
5214875 Manitoba Ltd.	
752615 B.C Ltd., Fraserview Remanufacturing Inc., d.b.a. Fraserview Cedar Products.	
9224–5737 Québec Inc. (aka A.G. Bois)	
A.B. Cedar Shingle Inc.	
Absolute Lumber Products Ltd.	
AJ Forest Products Ltd.	
Alberta Spruce Industries Ltd.	
Aler Forest Products Ltd.	
Alpa Lumber Mills Inc.	
American Pacific Wood Products	
Anbrook Industries Ltd.	
Andersen Pacific Forest Products Ltd.	
Anglo-American Cedar Products Ltd.	
Antrim Cedar Corporation	
Aquila Cedar Products Ltd.	
Arbec Lumber Inc.	
Aspen Planers Ltd.	
B&L Forest Products Ltd.	
B.B. Pallets Inc.	
Babine Forest Products Limited	
Bakerview Forest Products Inc.	
Bardobec Inc.	
Barrette-Chapais Ltee	
BarretteWood Inc.	
Benoît & Dionne Produits Forestiers Ltée	
Best Quality Cedar Products Ltd.	
Blanchet Multi Concept Inc.	
Blanchette & Blanchette Inc.	
Bois Aisé de Montréal Inc.	
Bois Bonsaï Inc.	
Bois D'oeuvre Cedrico Inc. (aka Cedrico Lumber Inc.)	
Bois Daaquam Inc.	

[4] Only changes to the official company name, rather than trade names, need to be addressed via a Separate Rate Application. Information regarding new trade names may be submitted via a Separate Rate Certification.

[5] The company names listed above were misspelled in the initiation notice that published February 6, 2020 (85 FR 6896). The correct spelling of the company names is listed in this notice.

[6] In the initiation notice that published on February 6, 2020 (85 FR 6896) Commerce inadvertently listed the wrong case number and case name for the case listed above. The correct case name and case number is listed in this notice.

	Period to be reviewed
Bois et Solutions Marketing SPEC Inc.	
Boisaco	
Boscus Canada Inc.	
Boucher Bros. Lumber Ltd.	
BPWood Ltd.	
Bramwood Forest Inc.	
Brink Forest Products Ltd.	
Brunswick Valley Lumber Inc.	
Busque & Laflamme Inc.	
C&C Wood Products Ltd.	
Caledonia Forest Products Inc.	
Campbell River Shake & Shingle Co. Ltd.	
Canadian American Forest Products Ltd.	
Canadian Wood Products Inc.	
Canfor Corporation/Canadian Forest Products Ltd./Canfor Wood Products Marketing Ltd.	
Canasia Forest Industries Ltd.	
Canusa cedar Inc.	
Canyon Lumber Company Ltd.	
Careau Bois Inc.	
Carrier & Begin Inc.	
Carrier Forest Products Ltd.	
Carrier Lumber Ltd.	
Carter Forest Products Inc.	
Cedar Valley Holdings Ltd.	
Cedarline Industries Ltd.	
Central Alberta Pallet Supply	
Central Cedar Ltd.	
Central Forest Products Inc.	
Centurion Lumber Ltd.	
Chaleur Sawmills LP	
Channel-ex Trading Corporation	
Clair Industrial Development Corp. Ltd.	
Clermond Hamel Ltée	
CNH Products Inc.	
Coast Clear Wood Ltd.	
Coast Mountain Cedar Products Ltd.	
Commonwealth Plywood Co. Ltd.	
Comox Valley Shakes Ltd./Comox Valley Shakes (2019) Ltd.	
Conifex Fibre Marketing Inc.	
Cowichan Lumber Ltd.	
CS Manufacturing Inc., dba Cedarshed	
CWP—Industriel Inc.	
CWP—Montréal Inc.	
D & D Pallets Ltd.	
Dakeryn Industries Ltd.	
Decker Lake Forest Products Ltd.	
Delco Forest Products Ltd.	
Delta Cedar Specialties Ltd.	
Devon Lumber Co. Ltd.	
DH Manufacturing Inc.	
Direct Cedar Supplies Ltd.	
Doubletree Forest Products Ltd.	
Downie Timber Ltd.	
Dunkley Lumber Ltd.	
EACOM Timber Corporation	
East Fraser Fiber Co. Ltd.	
Edgewood Forest Products Inc.	
ER Probyn Export Ltd.	
Eric Goguen & Sons Ltd.	
Falcon Lumber Ltd.	
Fontaine Inc.	
Foothills Forest Products Inc.	
Fornebu Lumber Co. Ltd.	
Fraser Specialty Products Ltd.	
FraserWood Inc.	
FraserWood Industries Ltd.	
Furtado Forest Products Ltd.	
G & R Cedar Ltd.	
Galloway Lumber Company Ltd.	
Glandell Enterprises Inc.	
Goat Lake Forest Products Ltd.	
Goldband Shake & Shingle Ltd.	

	Period to be reviewed
Golden Ears Shingle Ltd.	
Goldwood Industries Ltd.	
Goodfellow Inc.	
Gorman Bros. Lumber Ltd.	
Groupe Crête Chertsey	
Groupe Crête division St-Faustin	
Groupe Lebel Inc.	
Groupe Lignarex Inc.	
H.J. Crabbe & Sons Ltd.	
Haida Forest Products Ltd.	
Harry Freeman & Son Ltd.	
Hornepayne Lumber LP	
Imperial Cedar Products Ltd.	
Imperial Shake Co. Ltd.	
Independent Building Materials Dist.	
Interfor Corporation	
Island Cedar Products Ltd.	
Ivor Forest Products Ltd.	
J&G Log Works Ltd.	
J.D. Irving, Limited	
J.H. Huscroft Ltd.	
Jan Woodland (2001) Inc.	
Jasco Forest Products Ltd.	
Jazz Forest Products Ltd.	
Jhajj Lumber Corporation	
Kalesnikoff Lumber Co. Ltd.	
Kan Wood Ltd.	
Kebois Ltee/Ltd.	
Keystone Timber Ltd.	
Kootenay Innovative Wood Ltd.	
Lafontaine Lumber Inc.	
Langevin Forest Products Inc.	
Lecours Lumber Co. Limited	
Ledwidge Lumber Co. Ltd.	
Leisure Lumber Ltd.	
Les Bois d'oeuvre Beaudoin Gauthier Inc.	
Les Bois Martek Lumber	
Les Bois Traités M.G. Inc.	
Les Chantiers de Chibougamau Ltd.	
Les Produits Forestiers D&G Ltée	
Leslie Forest Products Ltd.	
Lignum Forest Products LLP	
Linwood Homes Ltd.	
Longlac Lumber Inc.	
Lulumco Inc.	
Magnum Forest Products Ltd.	
Maibec Inc.	
Manitou Forest Products Ltd.	
Marcel Lauzon Inc.	
Marwood Ltd.	
Materiaux Blanchet Inc.	
Matsqui Management and Consulting Services Ltd., dba Canadian Cedar Roofing Depot	
Metrie Canada Ltd.	
Mid Valley Lumber Specialties Ltd.	
Midway Lumber Mills Ltd.	
Mill & Timber Products Ltd.	
Millar Western Forest Products Ltd.	
Mobilier Rustique (Beauce) Inc.	
MP Atlantic Wood Ltd.	
Multicedre Ltee	
Murray Brothers Lumber Company Ltd.	
Nakina Lumber Inc.	
National Forest Products Ltd.	
New Future Lumber Ltd.	
Nicholson and Cates Ltd.	
Norsask Forest Products Limited Partnership	
North American Forest Products Ltd.	
North Enderby Timber Ltd.	
Oikawa Enterprises Ltd.	
Olympic Industries Inc./Olympic Industries ULC	
Oregon Canadian Forest Products	
Pacific Coast Cedar Products Ltd.	
Pacific Pallet Ltd.	

	Period to be reviewed
Pacific Western Wood Works Ltd.	
Parallel Wood Products Ltd.	
Pat Power Forest Products Corporation	
Phoenix Forest Products Inc.	
Pine Ideas Ltd.	
Pioneer Pallet & Lumber Ltd.	
Porcupine Wood Products Ltd.	
Portbec Forest Products Ltd.	
Power Wood Corp.	
Precision Cedar Products Corp.	
Prendiville Industries Ltd. (aka, Kenora Forest Products)	
Produits Forestiers Petit Paris	
Produits forestiers Temrex, s.e.c.	
Produits Matra Inc.	
Promobois G.D.S. Inc.	
Rayonier A.M. Canada GP	
Rembos Inc.	
Rene Bernard Inc.	
Resolute FP Canada Inc./Resolute Growth Canada Inc./Abitibi-LP Engineered Wood Inc./Abitibi-LP Engineered Wood II Inc./Forest Products Mauricie LP/Produits Forestiers Petit-Paris Inc./Socie´te´ en commandite Scierie Opitciwan	
Richard Lutes Cedar Inc.	
Rielly Industrial Lumber Inc.	
Roland Boulanger & Cie Ltee	
S & K Cedar Products Ltd.	
S&W Forest Products Ltd.	
S&R Sawmills Ltd.	
San Industries Ltd.	
Sawarne Lumber Co. Ltd.	
Scierie Alexandre Lemay & Fils Inc.	
Scierie P.S.E. Inc.	
Scierie St-Michel Inc.	
Scierie West Brome Inc.	
Scotsburn Lumber Co. Ltd.	
Sechoirs de Beauce Inc.	
Serpentine Cedar Ltd.	
Sexton Lumber Co. Ltd.	
Sigurdson Forest Products Ltd.	
Silvaris Corporation	
Silver Creek Premium Products Ltd.	
Sinclar Group Forest Products Ltd.	
Skana Forest Products Ltd.	
Skeena Sawmills Ltd.	
Sound Spars Enterprise Ltd.	
South Beach Trading Inc.	
Specialiste du Bardeau de Cedre Inc. (SBC)	
Spruceland Millworks Inc.	
Star Lumber Canada Ltd.	
Sundher Timber Products Ltd.	
Surrey Cedar Ltd.	
T.G. Wood Products Ltd.	
Taan Forest LP/Taan Forest Products	
Taiga Building Products Ltd.	
Tall Tree Lumber Company	
Teal Cedar Products Ltd./The Teal-Jones Group	
Tembec Inc.	
Terminal Forest Products Ltd.	
The Wood Source Inc.	
Tolko Industries Ltd./Tolko Marketing and Sales Ltd./Gilbert Smith Forest Products Ltd.	
Trans-Pacific Trading Ltd.	
Triad Forest Products Ltd.	
Twin Rivers Paper Co. Inc.	
Tyee Timber Products Ltd.	
Universal Lumber Sales Ltd.	
Usine Sartigan Inc.	
Vaagen Fibre Canada, ULC	
Valley Cedar 2 Inc./Valley Cedar 2 ULC	
Vancouver Island Shingle Ltd.	
Vancouver Specialty Cedar Products Ltd.	
Vanderhoof Specialty Wood Products Ltd.	
Visscher Lumber Inc.	
W.I. Woodtone Industries Inc.	
Waldun Forest Product Sales Ltd.	
Watkins Sawmills Ltd.	

	Period to be reviewed
West Bay Forest Products Ltd.	
West Fraser Mills Ltd., Blue Ridge Lumber Inc./Manning Forest Products Ltd./and Sundre Forest Products Inc.	
West Fraser Timber Co. Ltd.	
West Wind Hardwood Inc.	
Western Forest Products Inc.	
Western Lumber Sales Limited	
Western Wood Preservers Ltd.	
Weston Forest Products Inc.	
Westrend Exteriors Inc.	
Weyerhaeuser Co.	
White River Forest Products L.P.	
Winton Homes Ltd.	
Woodline Forest Products Ltd.	
Woodstock Forest Products/Woodstock Forest Products Inc.	
Woodtone Specialties Inc.	
Yarrow Wood Ltd.	
Thailand: Prestressed Concrete Steel Wire Strand, A–549–820	1/1/19–12/31/19
The Siam Industrial Wire Co., Ltd.	
The People's Republic of China: Hardwood Plywood Products, A–570–051	1/1/19–12/31/19
Anhui Hoda Wood Co., Ltd.	
Celtic Co., Ltd.	
Cosco Star International Co., Ltd.	
Feixian Longteng Wood Co., Ltd.	
Golder International Trade Co., Ltd.	
Happy Wood Industrial Group Co., Ltd.	
Highland Industries-Hanlin	
Huainan Mengping Import and Export Co., Ltd.	
Jiangsu High Hope Arser Co., Ltd.	
Jiangsu Sunwell Cabinetry Co., Ltd.	
Jiangsu Top Point International Co., Ltd.	
Jiaxing Gsun Imp. & Exp. Co., Ltd.	
Jiaxing Hengtong Wood Co., Ltd.	
Lianyungang Yuantai International Trade Co., Ltd.	
Linyi Bomei Furniture Co., Ltd.	
Linyi Chengen Import and Export Co., Ltd.	
Linyi City Dongfang Jinxin Economic and Trade Co., Ltd. (a/k/a Linyi City Dongfang Jinxjin Economic and Trade Co., Ltd.)	
Linyi Dahua Wood Co., Ltd.	
Linyi Evergreen Wood Co., Ltd.	
Linyi Glary Plywood Co., Ltd.	
Linyi Hengsheng Wood Industry Co., Ltd.	
Linyi Huasheng Yongbin Wood Co., Ltd.	
Linyi Jiahe Wood Industry Co., Ltd.	
Linyi Linhai Wood Co., Ltd.	
Linyi Mingzhu Wood Co., Ltd.	
Linyi Sanfortune Wood Co., Ltd.	
Pingyi Jinniu Wood Co., Ltd.	
Qingdao Good Faith Import and Export Co., Ltd.	
Qingdao Top P&Q International Corp.	
SAICG International Trading Co., Ltd.	
Shandong Dongfang Bayley Wood Co., Ltd.	
Shandong Jinhua International Trading Co., Ltd.	
Shandong Jinluda International Trade Co., Ltd.	
Shandong Qishan International Trading Co., Ltd.	
Shandong Senmanqi Import & Export Co., Ltd.	
Shandong Shengdi International Trading Co., Ltd.	
Shanghai Brightwood Trading Co., Ltd.	
Shanghai Futuwood Trading Co., Ltd.	
Shanghai Luli Trading Co., Ltd.	
Suining Pengxiang Wood Co., Ltd.	
Sumec International Technology Co., Ltd.	
Suqian Hopeway International Trade Co., Ltd.	
Suzhou Fengshuwan Import and Export Trade Co., Ltd. a/k/a Suzhou Fengshuwan I&E Trade Co., Ltd.	
Suzhou Oriental Dragon Import and Export Co., Ltd.	
Vietnam Finewood Company Limited	
Win Faith Trading Limited	
Xuzhou Amish Import & Export Co., Ltd.	
Xuzhou Andefu Wood Co., Ltd.	
Xuzhou Constant Forest Industry Co., Ltd.	
Xuzhou DNT Commercial Co., Ltd.	
Xuzhou Jiangheng Wood Products Co., Ltd.	
Xuzhou Jiangyang Wood Industries Co., Ltd.	
Xuzhou Longyuan Wood Industry Co., Ltd.	

	Period to be reviewed
XuZhou PinLin International Trade Co., Ltd.	
Xuzhou Shengping Imp and Exp Co., Ltd.	
Xuzhou Timber International Trade Co., Ltd.	
Yishui Zelin Wood Made Co., Ltd.	
Zhejiang Dehua TB Import & Export Co., Ltd.	
The People's Republic of China: Potassium Permanganate, A–570–001	1/1/19–12/31/19
Pacific Accelerator Limited	
Chongqing Changyuan Group Limited (Chongqing Changyuan Chemical Corporation Limited)	
The People's Republic of China: Wooden Bedroom Furniture, A–570–890	1/1/19–12/31/19
Dongguan Chengcheng Group Co., Ltd.	
Dongguan Mu Si Furniture Co., Ltd.	
Dongguan Nova Furniture Co., Ltd.	
Dongguan Singways Furniture Co., Ltd.	
Dongguan Sunshine Furniture Co., Ltd.	
Dongguan Sunrise Furniture Co., Taicang Sunrise Wood Industry Co., Ltd., Shanghai Sunrise Furniture Co., Ltd., Fairmont Designs	
Dongguan Sunrise Furniture Co., Ltd. Taicang Fairmont Designs Furniture Co., Ltd., Meizhou Sunrise Furniture Co., Ltd.	
Dongguan Yujia Furniture Co., Ltd.	
Dongguan Zhisheng Furniture Co., Ltd.	
Dorbest Ltd., Rui Feng Woodwork Co., Ltd. AKA Rui Feng Woodwork (Dongguan) Co., Ltd., Rui Feng Lumber Development Co., Ltd. AKA Rui Feng Lumber Development (Shenzhen) Co., Ltd.	
Dream Rooms Furniture (Shanghai) Co. Ltd.	
Eurosa (Kunshan) Co., Ltd., Eurosa Furniture Co., (PTE) Ltd.	
Fleetwood Fine Furniture LP	
Fortune Furniture Ltd., Dongguan Fortune Furniture Ltd.	
Fujian Lianfu Forestry Co., Ltd. (AKA Fujian Wonder Pacific, Inc.), Fuzhou Huan Mei Furniture Co., Ltd., Jiangsu Dare Furniture Co., Ltd.	
Golden Well International (HK), Ltd.	
Guangdong New Four Seas Furniture Manufacturing Ltd.	
Guangzhou Lucky Furniture Co., Ltd.	
Guangzhou Maria Yee Furnishings Ltd., Pyla HK Ltd., Maria Yee, Inc.	
Hang Hai Woodcrafts Art Factory	
Jiangmen Kinwai Furniture Decoration Co., Ltd.	
Jiangmen Kinwai International Furniture Co., Ltd.	
Jiangsu Xiangsheng Bedtime Furniture Co., Ltd.	
Jiangsu Yuexing Furniture Group Co., Ltd.	
Jiashan Zhenxuan Furniture Co., Ltd.	
Jiedong Lehouse Furniture Co., Ltd.	
King's Way Furniture Industries Co., Ltd., Kingsyear, Ltd.	
Nanhai Jiantai Woodwork Co. Ltd., Fortune Glory Industrial Ltd. (H.K. Ltd.)	
Nantong Wangzhuang Furniture Co. Ltd.	
Nantong Yangzi Furniture Co. Ltd.	
Nathan International Ltd., Nathan Rattan Factory	
Perfect Line Furniture Co., Ltd.	
PuTian JingGong Furniture Co., Ltd.	
Qingdao Beiyuan Industry Trading Co., Ltd., Qingdao Beiyuan Shengli Furniture Co., Ltd.	
Shanghai Jian Pu Export & Import Co., Ltd.	
Shanghai Maoji Imp & Exp Co., Ltd.	
Shenyang Shining Dongxing Furniture Co., Ltd.	
Shenzhen Diamond Furniture Co., Ltd.	
Shenzhen Forest Furniture Co., Ltd.	
Shenzhen Jiafa High Grade Furniture Co., Ltd., Golden Lion International Trading Ltd.	
Shenzhen Jichang Wood Products Co. Ltd.	
Shenzhen New Fudu Furniture Co., Ltd.	
Shenzhen Wonderful Furniture Co., Ltd.	
Shenzhen Xingli Furniture Co., Ltd.	
Shing Mark Enterprise Co., Ltd., Carven Industries Ltd. (BVI), Carven Industries Ltd. (HK), Dongguan Zhenxin Furniture Co., Ltd., Dongguan Yonapeng Furniture Co., Ltd.	
Songgang Jasonwood Furniture Factory, Jasonwood Industrial Co., Ltd. SA	
Sunforce Furniture (Hui-Yang) Co., Ltd., Sun Fung Wooden Factory, Sun Fung Co., Shin Feng Furniture Co., Ltd., Stupendous International Co., Ltd.	
Superwood Co. Ltd., Lianjiang Zongyu Art Products Co., Ltd.	
Taicang Fairmount Designs Furniture Co. Ltd.	
Tradewinds Furniture Ltd. (successor-in-interest to Nanhai Jiantai Woodwork Co.), Fortune Glory Industrial Ltd. (H.K. Ltd.)	
Tube-Smith Enterprise (Zhangzhou) Co., Ltd., Tube-Smith Enterprise (Haimen) Co., Ltd., Billionworth Enterprises Ltd.	
Weimei Furniture Co., Ltd.	
Wuxi Yushea Furniture Co., Ltd.	
Xiamen Yongquan Sci-Tech Development Co., Ltd.	
Xilinmen Group Co. Ltd.	
Yeh Brothers World Trade Inc.	

	Period to be reviewed
Yihua Lifestyle Technology Co., Ltd.	
Yihua Timber Industry Co., Ltd., Guangdong Yihua Timber Industry Co., Ltd.	
Zhangjiagang Daye Hotel Furniture Co. Ltd.	
Zhangzhou Guohui Industrial & Trade Co., Ltd.	
Zhangzhou XYM Furniture Product Co., Ltd.	
Zhejiang Tianyi Scientific & Educational Equipment Co., Ltd.	
Zhongshan Fookyik Furniture Co., Ltd.	
Zhong Shan Fullwin Furniture Co., Ltd.	
Zhongshan Golden King Furniture Industrial Co., Ltd.	
Zhoushan For-Strong Wood Co., Ltd.	
Turkey: Welded Line Pipe,[5] A–489–822	12/1/18–11/30/19
Borusan Mannesmann Boru Sanayi ve Ticaret A.S.	
Cayirova Boru Sanayi ve Ticaret A.S.	
Yücel Boru Ithalat-Ihracat ve Pazarlama A.S.	
United Arab Emirates: Circular Welded Carbon-Quality Steel Pipe,[6] A–520–807	12/1/18–11/30/19

	Period to be reviewed
CVD Proceedings	
Canada: Certain Softwood Lumber Products, C–122–858	1/1/19–12/31/19
1074712 BC Ltd.	
258258 B.C. Ltd., dba Pacific Coast Cedar Products	
5214875 Manitoba Ltd.	
752615 B.C Ltd., Fraserview Remanufacturing Inc., dba Fraserview Cedar Products	
9224–5737 Québec Inc. (aka A.G. Bois)	
A.B. Cedar Shingle Inc.	
Absolute Lumber Products, Ltd.	
AJ Forest Products Ltd.	
Alberta Spruce Industries Ltd.	
Aler Forest Products, Ltd.	
Alpa Lumber Mills Inc.	
AM Lumber Brokerage	
American Pacific Wood Products	
Anbrook Industries Ltd.	
Andersen Pacific Forest Products Ltd.	
Anglo-American Cedar Products Ltd.	
Antrim Cedar Corporation	
Aquila Cedar Products Ltd.	
Arbec Lumber Inc.	
Aspen Planers Ltd.	
B&L Forest Products Ltd.	
B.B. Pallets Inc.	
Babine Forest Products Limited	
Bakerview Forest Products Inc.	
Bardobec Inc.	
Barrette-Chapais Ltee	
BarretteWood Inc.	
Benoît & Dionne Produits Forestiers Ltée	
Best Quality Cedar Products Ltd.	
Blanchet Multi Concept Inc.	
Blanchette & Blanchette Inc.	
Bois Aisé de Montréal Inc.	
Bois Bonsaï Inc.	
Bois D'oeuvre Cedrico Inc. (aka Cedrico Lumber Inc.)	
Bois Daaquam Inc.	
Bois et Solutions Marketing SPEC Inc.	
Boisaco	
Boscus Canada Inc.	
BPWood Ltd.	
Bramwood Forest Inc.	
Brink Forest Products Ltd.	
Brunswick Valley Lumber Inc.	
Busque & Laflamme Inc.	
C&C Wood Products Ltd.	
Caledonia Forest Products Inc.	
Campbell River Shake & Shingle Co. Ltd.	
Canadian American Forest Products Ltd.	
Canadian Wood Products Inc.	
Canasia Forest Industries Ltd	
Canfor Corporation/Canadian Forest Products Ltd./Canfor Wood Products Marketing Ltd.	
Canusa cedar Inc.	

	Period to be reviewed
Canyon Lumber Company Ltd.	
Careau Bois Inc.	
Carrier & Begin Inc.	
Carrier Forest Products Ltd.	
Carrier Lumber Ltd.	
Cedar Valley Holdings Ltd.	
Cedarline Industries Ltd.	
Central Alberta Pallet Supply	
Central Cedar Ltd.	
Central Forest Products Inc.	
Centurion Lumber Ltd.	
Chaleur Sawmills LP	
Channel-ex Trading Corporation	
Clair Industrial Development Corp. Ltd.	
Clermond Hamel Ltée	
CNH Products Inc.	
Coast Clear Wood Ltd.	
Coast Mountain Cedar Products Ltd.	
Columbia River Shake & Shingle Ltd.	
Commonwealth Plywood Co. Ltd.	
Comox Valley Shakes Ltd./Comox Valley Shakes (2019) Ltd.	
Conifex Fibre Marketing Inc.	
Cowichan Lumber Ltd.	
CS Manufacturing Inc., dba Cedarshed	
CWP—Industriel Inc.	
CWP—Montréal Inc.	
D & D Pallets Ltd.	
Dakeryn Industries Ltd.	
Decker Lake Forest Products Ltd.	
Delco Forest Products Ltd.	
Delta Cedar Specialties Ltd.	
Devon Lumber Co. Ltd.	
DH Manufacturing Inc.	
Direct Cedar Supplies Ltd.	
Doubletree Forest Products Ltd.	
Downie Timber Ltd.	
Dunkley Lumber Ltd.	
EACOM Timber Corporation	
East Fraser Fiber Co. Ltd.	
Edgewood Forest Products Inc.	
ER Probyn Export Ltd.	
Eric Goguen & Sons Ltd.	
Falcon Lumber Ltd.	
Fontaine Inc.	
Foothills Forest Products Inc.	
Fornebu Lumber Co. Ltd.	
Fraser Specialty Products Ltd.	
FraserWood Inc.	
FraserWood Industries Ltd.	
Furtado Forest Products Ltd.	
G & R Cedar Ltd.	
Galloway Lumber Company Ltd.	
Glandell Enterprises Inc.	
Goat Lake Forest Products Ltd.	
Goldband Shake & Shingle Ltd.	
Golden Ears Shingle Ltd.	
Goldwood Industries Ltd.	
Goodfellow Inc.	
Gorman Bros. Lumber Ltd.	
Groupe Crête Chertsey	
Groupe Crête division St-Faustin	
Groupe Lebel Inc.	
Groupe Lignarex Inc.	
H.J. Crabbe & Sons Ltd.	
Haida Forest Products Ltd.	
Harry Freeman & Son Ltd.	
Hornepayne Lumber LP	
Imperial Cedar Products, Ltd.	
Imperial Shake Co. Ltd.	
Independent Building Materials Dist.	
Interfor Corporation	
Island Cedar Products Ltd.	
Ivor Forest Products Ltd.	

	Period to be reviewed
J&G Log Works Ltd.	
J.D. Irving, Limited	
J.H. Huscroft Ltd.	
Jan Woodland (2001) Inc.	
Jasco Forest Products Ltd.	
Jazz Forest Products Ltd.	
Jhajj Lumber Corporation	
Kalesnikoff Lumber Co. Ltd.	
Kan Wood, Ltd.	
Kebois Ltée/Ltd.	
Keystone Timber Ltd.	
Kootenay Innovative Wood Ltd.	
L'Atelier de Réadaptation au Travail de Beauce Inc.	
Lafontaine Lumber Inc.	
Langevin Forest Products Inc.	
Lecours Lumber Co. Limited	
Ledwidge Lumber Co. Ltd.	
Leisure Lumber Ltd.	
Les Bois d'oeuvre Beaudoin Gauthier Inc.	
Les Bois Martek Lumber	
Les Bois Traités M.G. Inc.	
Les Chantiers de Chibougamau Ltd.	
Les Produits Forestiers D&G Ltée/Le Groupe Gesco-Star Ltée/Les Produits Forestiers Portbec Ltée/Les Produits Forestiers Startrees Ltée [7]	
Leslie Forest Products Ltd.	
Lignum Forest Products LLP	
Linwood Homes Ltd.	
Longlac Lumber Inc.	
Lulumco Inc.	
Magnum Forest Products Ltd.	
Maibec inc.	
Manitou Forest Products Ltd.	
Marcel Lauzon Inc./Placements Marcel Lauzon Ltée/Investissements LRC Inc.[8]	
Marwood Ltd.	
Materiaux Blanchet Inc.	
Matsqui Management and Consulting Services Ltd., dba Canadian Cedar Roofing Depot	
Metrie Canada Ltd.	
Mid Valley Lumber Specialties Ltd.	
Midway Lumber Mills Ltd.	
Mill & Timber Products Ltd.	
Millar Western Forest Products Ltd.	
Mobilier Rustique (Beauce) Inc.	
MP Atlantic Wood Ltd.	
Multicedre Ltée	
Murray Brothers Lumber Company Ltd	
Nakina Lumber Inc.	
National Forest Products Ltd.	
New Future Lumber Ltd.	
Nicholson and Cates Ltd.	
Norsask Forest Products Limited Partnership	
North American Forest Products Ltd. (located in Abbotsford, British Columbia)	
North American Forest Products Ltd. (located in Saint-Quentin, New Brunswick)/Parent-Violette Gestion Ltée/Le Groupe Parent Ltée [9]	
North Enderby Timber Ltd.	
Oikawa Enterprises Ltd.	
Olympic Industries Inc./Olympic Industries ULC	
Oregon Canadian Forest Products	
Pacific Pallet Ltd.	
Pacific Western Wood Works Ltd.	
Parallel Wood Products Ltd.	
Pat Power Forest Products Corporation	
Phoenix Forest Products Inc.	
Pine Ideas Ltd.	
Pioneer Pallet & Lumber Ltd.	
Porcupine Wood Products Ltd.	
Portbec Forest Products Ltd.	
Power Wood Corp.	
Precision Cedar Products Corp.	
Prendiville Industries Ltd. (aka, Kenora Forest Products)	
Produits Forestiers Petit Paris	
Produits forestiers Temrex, s.e.c.	
Produits Matra Inc.	
Promobois G.D.S. inc.	

	Period to be reviewed
Quadra Cedar	
Rayonier A.M. Canada GP	
Rembos Inc.	
Rene Bernard Inc.	
Resolute FP Canada Inc./Resolute Growth Canada Inc./Produits Forestiers Mauricie SEC./Abitibi-Bowater Canada Inc./Bowater Canadian Ltd./Resolute Forest Products Inc.	
Richard Lutes Cedar Inc.	
Rielly Industrial Lumber Inc.	
Roland Boulanger & Cie Ltée/Industries Daveluyville Inc./Les Manufacturiers Warwick Ltée [10]	
S & K Cedar Products Ltd.	
S&R Sawmills Ltd.	
S&W Forest Products Ltd.	
San Industries Ltd.	
Sawarne Lumber Co. Ltd.	
Scierie Alexandre Lemay & Fils Inc./Bois Lemay Inc./Industrie Lemay Inc.[11]	
Scierie P.S.E. Inc.	
Scierie St-Michel inc.	
Scierie West Brome Inc.	
Scotsburn Lumber Co. Ltd.	
Scott Lumber Sales	
Sechoirs de Beauce Inc.	
Serpentine Cedar Ltd.	
Sexton Lumber Co. Ltd.	
Sigurdson Forest Products Ltd.	
Silvaris Corporation	
Silver Creek Premium Products Ltd.	
Sinclar Group Forest Products Ltd.	
Skana Forest Products Ltd.	
Skeena Sawmills Ltd.	
Sound Spars Enterprise Ltd.	
South Beach Trading Inc.	
Specialiste de Bardeau de Cedre Inc. (SBC)	
Spruceland Millworks Inc.	
Star Lumber Canada Ltd.	
Sundher Timber Products Ltd.	
Surrey Cedar Ltd.	
T.G. Wood Products Ltd.	
Taan Forest LP/Taan Forest Products	
Taiga Building Products Ltd.	
Tall Tree Lumber Company	
Teal Cedar Products Ltd./The Teal Jones Group	
Tembec Inc.	
Temrex Produits Forestiers s.e.c.	
Terminal Forest Products Ltd.	
The Wood Source Inc.	
Tolko Industries Ltd./Tolko Marketing and Sales Ltd./Gilbert Smith Forest Products Ltd.	
Trans-Pacific Trading Ltd.	
Triad Forest Products Ltd.	
Twin Rivers Paper Co. Inc.	
Tyee Timber Products Ltd.	
Universal Lumber Sales Ltd.	
Usine Sartigan Inc.	
Vaagen Fibre Canada ULC	
Valley Cedar 2 Inc./Valley Cedar 2 ULC	
Vancouver Island Shingle Ltd.	
Vancouver Specialty Cedar Products Ltd.	
Vanderhoof Specialty Wood Products Ltd.	
Visscher Lumber Inc.	
W.I. Woodtone Industries Inc.	
Waldun Forest Product Sales Ltd.	
Watkins Sawmills Ltd.	
West Bay Forest Products Ltd.	
West Fraser Mills Ltd./West Fraser Timber Co. Ltd./West Fraser Alberta Holdings Ltd./Blue Ridge Lumber Inc./Manning Forest Products Ltd./Sunpine Inc./Sundre Forest Products Inc.	
West Wind Hardwood Inc.	
Western Forest Products Inc.	
Western Lumber Sales Limited	
Western Wood Preservers Ltd.	
Weston Forest Products Inc.	
Westrend Exteriors Inc.	
Weyerhaeuser Co.	
White River Forest Products L.P.	
Winton Homes Ltd.	

	Period to be reviewed
Woodline Forest Products Ltd.	
Woodstock Forest Products/Woodstock Forest Products Inc.	
Woodtone Specialties Inc.	
Yarrow Wood Ltd.	
Woodstock Forest Products/Woodstock Forest Products Inc.	
Woodtone Specialties Inc.	
Yarrow Wood Ltd.	
The People's Republic of China: Hardwood Plywood Products, C–570–052	1/1/19–12/31/19
Anhui Hoda Wood Co., Ltd	
Celtic Co., Ltd	
Feixian Longteng Wood Co., Ltd	
Golder International Trade Co., Ltd	
Huainan Mengping Import and Export Co., Ltd	
Jiangsu Top Point International Co., Ltd	
Jiaxing Gsun Imp. & Exp. Co., Ltd	
Jiaxing Hengtong Wood Co., Ltd	
Linyi Celtic Wood Co., Ltd	
Linyi Chengen Import and Export Co., Ltd	
Linyi Evergreen Wood Co., Ltd	
Linyi Glary Plywood Co., Ltd	
Linyi Hengsheng Wood Industry Co., Ltd	
Linyi Huasheng Yongbin Wood Co., Ltd	
Linyi Jiahe Wood Industry Co., Ltd	
Linyi Linhai Wood Co., Ltd	
Linyi Mingzhu Wood Co., Ltd	
Linyi Sanfortune Wood Co., Ltd	
Qingdao Good Faith Import and Export Co., Ltd	
Shandong Dongfang Bayley Wood Co., Ltd	
Shandong Jinluda International Trade Co., Ltd	
Shandong Qishan International Trading Co., Ltd	
Shandong Senmanqi Import & Export Co., Ltd	
Shandong Shengdi International Trading Co., Ltd	
Shanghai Brightwood Trading Co., Ltd	
Shanghai Futuwood Trading Co., Ltd	
Suining Pengxiang Wood Co., Ltd	
Sumec International Technology Co., Ltd	
Suqian Hopeway International Trade Co., Ltd	
Suzhou Oriental Dragon Import and Export Co., Ltd	
Xuzhou Pinlin International Trade Co., Ltd	
Xuzhou Andefu Wood Co., Ltd	
Xuzhou Constant Forest Industry Co., Ltd	
Xuzhou DNT Commercial Co., Ltd	
Xuzhou Jiangheng Wood Products Co., Ltd	
Xuzhou Jiangyang Wood Industries Co., Ltd	
Xuzhou Longyuan Wood Industry Co., Ltd	
Xuzhou Shengping Imp and Exp Co., Ltd	
Xuzhou Timber International Trade Co., Ltd	
Yishui Zelin Wood Made Co., Ltd	
The People's Republic of China: Oil Country Tubular Goods, C–570–944	1/1/19–12/31/19
Anhui Baitai Steel Industry Co., Ltd.	
Anhui Yingsheng Steel Pipe Manufacturing Co., Ltd.	
Anji Pengda Steel Pipe Co., Ltd	
Baoshan Iron & Steel Co., Ltd.	
Baotou Gangxing Industrial Group (HU)	
Beijing Fenglong Technology Co., Ltd.	
Beijing Hengzhixinda Trade Co., Ltd.	
Bestar Steel Co., Ltd	
Changshu Chang Yee Imp And Exp Co. Ltd.	
Changshu Hexin Stainless Steel	
Changshu Walsin Metal Industrial Co., Ltd.	
Changshu Walsin Specialty Steel Co., Ltd.	
Changxing Xingyang Import & Export	
Changzhou Changbao Precision & Special Steel Tubes Co., Ltd.	
Changzhou Hengfeng Stainless Steel Pipe Factory	
Changzhou HongRen Precision Pipe Manufacturing Co., Ltd.	
Changzhou Hongtai Precision Steel Pipe Co., Ltd	
Changzhou Tremen Steel Co., Ltd.	
Chaoteng Group Ltd.	
China National Building Materials Group (CNBM) Corporation	
China United International Company	
Cixi Zhonghuan Machinery	
Csm-Tech Co., Ltd.	
Dalian Exchanflow Fluid Equipment	

	Period to be reviewed
Dalian Grand International Trade Co.	
Dalian Xinyingpeng International Trade Co., Ltd.	
Dexin Steel Tube (China) Co., Ltd.	
Dongguan Chang Tain Metals Co.	
Dongguan Sanchuang Composite Materials Technology Co., Ltd.	
Dongying Kechuang Petroleum Equipment Co., Ltd.	
Eastsun (Hongkong) Development Ltd.	
Foshan Runtian Metal Products Co., Ltd.	
Foshan Holar Stainless Steel Products Ltd.	
Gaoyou Huaxing Petroleum Pipe Manufacturing Co., Ltd.	
GE (Shanghai) Power Technology Co., Ltd.	
Guangdong Jiahong Company	
Guangzhou Guangtex Trade Co., Ltd.	
Guilin Lijia Metals Co., Ltd.	
Henan Dongfanglong Machine Manufacture Co., Ltd.	
Henan Steel Guang International Trade Co., Ltd.	
Hengyang Hongyuan Pipe Industry Co., Ltd.	
Hengyang Hongda Special Steel Tube Co., Ltd.	
Hengyang Steel Tube Group Int'l Trading Inc.	
Hong Yue Stainless Steel Ltd.	
Hubei Xinyegang Steel Co., Ltd	
Huludao Steel Pipe Industrial Co., Ltd.	
Hunan Standard Steel Co., Ltd.	
Huzhou Kelai Import & Export Co., Ltd.	
Jiangsu Changbao Steel Tube Co., Ltd.	
Jiangsu Changbao Taobang Petroleum Pipe Co., Ltd.	
Jiangsu ChengDe Steel Tube Share Co., Ltd.	
Jiangsu Hongji Metal Products Co., Ltd.	
Jiangsu Hongyi Steel Pipe Co., Ltd.	
Jiangsu JinDi Special Steel Co., Ltd.	
Jiangsu Wujin Stainless Steel Pipe Group Co., Ltd.	
Jiangyin Zenith Metals Co., Ltd.	
Jiaxing Exen Trading Co., Ltd.	
Jiaxing MT Stainless Steel Co., Ltd.	
Jiaxing Usui Tsurumi Precision Tube	
JINAN Yingsiman Machinery Co., Ltd.	
Jun Yi Coated Pipe Co., Ltd.	
Juyi Steelpipe Co., Ltd.	
Lord Steel International Co., Ltd.	
Luoyang Sunrui Special Equipment Co., Ltd.	
Mainchain International Inc.	
Megagroup Pacific Ltd.	
Mulmic Co., Ltd.	
Nanchang Twin-Win Import & Export Trade Co., Ltd.	
Nantong Special Steel Co., Ltd.	
Omprs Group Co., Ltd.	
P.A. Tech Co., Ltd.	
Puyang Zhongshi Group Co., Ltd.	
Qingdao Hijiton International Trade	
Ronsberg Steel Group Limited	
Shaanxi Newland Industrial Co., Ltd.	
Shandong Jianning Metals Co., Ltd.	
Shandong Liaocheng ZGL Import & Export Co., Ltd.	
Shandong Xinyuan Steel Pipe Mfg Co., Ltd.	
Shandong Yonglijinggong Petroleum Equipment Co., Ltd.	
Shanghai Baoluo Stainless Steel Tube Co., Ltd.	
Shanghai Baoyi Steel Pipe Limited Company	
Shanghai Crystal Palace Pipe Co., Ltd.	
Shanghai CS Manufacturing Co.	
Shanghai Dongjia Casting Factory	
Shanghai Good-Relation Precision	
Shanghai Handun Trading Co., Ltd.	
Shanghai Huagang Stainless Steel Co., Ltd.	
Shanghai Jaway Metal Co., Ltd.	
Shanghai Jun Wen (JW) Steel Co., Ltd.	
Shanghai Juxing Industrial Co., Ltd.	
Shanghai Kinetech QCS International	
Shanghai Maxmount Special Steel Co., Ltd.	
Shanghai Minmetals (Hong Kong) Co., Ltd.	
Shanghai Tianyang Import and Export Co., Ltd.	
Shanghai Tsingshan Mineral Co., Ltd.	
Shanghai Wilsun Hi-Tech Materials Co., Ltd.	
Shanghai Xuntian International Trade Co., Ltd.	

	Period to be reviewed
Shanghai Yijing Import Export Co., Ltd.	
Shanghai Yuecai Steel Pipe Co., Ltd.	
Shangshang Desheng Group Co., Ltd.	
Shengli Oilfield Highland Petroleum Equipment Company Co., Ltd.	
Shengli Oilfield Shengji Petroleum Equipment Co., Ltd.	
Shenzhen Chiwan Sembawang Engineering Co., Ltd.	
Shenzhen Gudsen Technology Co., Ltd	
Shijiazhuang Dodgesun I/E Corp., Ltd.	
Shijiazhuang Teneng Electrical & Mechanical Equipment Co., Ltd.	
Shinda (Tangshan) Creative Oil & Gas Equipment Co., Ltd.	
Sichuan Y&J Industries Co., Ltd.	
Sunrise Industrial Equipment Inc.	
Suzhou Foster International Co., Ltd	
Suzhou Tuntun Sloth E-Commerce Co., Ltd.	
Taixing Qitai Mechanical Foundry Co., Ltd.	
Taiyuan Huaye Equipment Research Institute Co., Ltd.	
Technoflex (Shanghai) Inc.	
Tianjin Hengwang Machinery Co., Ltd.	
Tianjin Jinggong Petroleum Pipe Fittings Co., Ltd.	
Tianjin Laibide Trade Co., Ltd.	
Tianjin Longshenghua Imp. & Exp.	
Tianjin North-pipe Trade Co., Ltd.	
Tianjin Pipe (Group) Co.	
Tianjin Pipe International Economic & Trading Corp.	
Tianjin Richsen Techhnology Co., Ltd.	
Tianjin Shenzhoutong Steel Pipe Co., Ltd.	
Tianjin Xinyue Industry & Trade Co., Ltd.	
Tusco International Inc.	
Tusteel International Inc.	
Usual Material Group Limited	
Vinto Industrial Co., Ltd.	
Vst Steel Co., Ltd	
Wenzhou Huachao Tech Co., Ltd.	
Wenzhou Jiuchang Steel Co., Ltd.	
Wenzhou Sunrise Import and Export Co., Ltd.	
World Steel Asia Co., Ltd.	
Wuhu Better Trade Co., Ltd.	
Wuxi Dmk Hydraulic Technology Co., Ltd.	
Wuxi Eastsun Trade Co., Ltd.	
Wuxi Free Petroleum Tubulars Manufacture Co., Ltd.	
Wuxi OFD Oil-Field Supply Co., Ltd.	
Wuxi Seamless Pipe Co., Ltd.	
Xiamen Youo Intelligent Technology Co., Ltd.	
Xuzhou E&P Petroleum Equipment Co., Ltd.	
Xuzhou Oilfield Equipment Co., Ltd.	
Xuzhou Taifeng Oilwell Products Co., Ltd.	
Xuzhou Yongsheng Pipe & Fitting Co., Ltd.	
Yanda (Haimen) Heavy Equipment Manufacturing Co., Ltd.	
Yangzhou Chengde Steel Pipe Co., Ltd.	
Yangzhou Lontrin Steel Tube Co., Ltd.	
Yantai Jereh Petroleum Equipment & Technologies Co., Ltd.	
Yiwu Bentai Imp. & Exp. Co., Ltd.	
Yiyang Yaxue Import and Export Co., Ltd.	
Zhangjiagang City Yiyang Import & Export Trading Co. Ltd.	
Zhangjiagang Fangling Tube-Making Co., Ltd.	
Zhangjiagang Huacheng Import & Export Co., Ltd.	
Zhangjiagang Maitan Metal Products Co., Ltd.	
Zhangjiagang Shengdingyuan Pipe-Making Co., Ltd.	
Zhejiang Bnjis Stainless Steel Co., Ltd.	
Zhejiang Dingxin Steel Tube Manufacturing Co., Ltd.	
Zhejiang E-Tune Special Steel. Tube Co. Ltd.	
Zhejiang Jianli Enterprise Co., Ltd.	
Zhejiang Shifang Pipe Industry Co., Ltd.	
Zhejiang Gross Seamless Steel Tube., Ltd.	
Zhejiang Jiuli Hi-Tech Metals Co., Ltd.	
Zhejiang Kanglong Steel Co., Ltd.	
Zhejiang Minghe Steel Pipe Co., Ltd.	
Zhejiang Ruimai Stainless Steel Tube Co., Ltd.	
Zhejiang Tsingshan Steel Pipe Co., Ltd.	
Zhejiang Xinhang Stainless Steel Co., Ltd.	
Zhejiang Yinlong Stainless Steel Co., Ltd.	
Zhejiang Zhiju Pipeline Industry Co., Ltd.	
Zhejiang Zhongda Special Steel Co., Ltd.	

	Period to be reviewed
Zhejiang Zhongli Stainless Steel Pipe Co., Ltd. Zhongxing Energy Equipment Co., Ltd. Zhongzhou Special Alloy Tube Co., Ltd. Suspension Agreements None	

[7] Entries of merchandise produced and exported by Les Produits Forestiers D&G Ltée (and its cross-owned affiliates) are not subject to countervailing duties because this producer/exporter combination was excluded from the order. *See Certain Softwood Lumber Products from Canada: Final Results of Countervailing Duty Expedited Review,* 84 FR 32121 at 32122 (July 5, 2019). However, entries of merchandise produced by any other entity and exported by Les Produits Forestiers D&G Ltée (or its cross-owned affiliates) or produced by Les Produits Forestiers D&G Ltée (or its cross-owned affiliates) and exported by another entity are subject to this administrative review.

[8] Entries of merchandise produced and exported by Marcel Lauzon Inc. (and its cross-owned affiliates) are not subject to countervailing duties because this producer/exporter combination was excluded from the order. *See Certain Softwood Lumber Products from Canada: Final Results of Countervailing Duty Expedited Review,* 84 FR 32121 at 32122 (July 5, 2019). However, entries of merchandise produced by any other entity and exported by Marcel Lauzon Inc. (or its cross-owned affiliates) or produced by Marcel Lauzon Inc. (or its cross-owned affiliates) and exported by another entity are subject to this administrative review.

[9] Entries of merchandise produced and exported by North American Forest Products Ltd. (located in Saint-Quentin, New Brunswick) (and its cross-owned affiliates) are not subject to countervailing duties because this producer/exporter combination was excluded from the order. *See Certain Softwood Lumber Products from Canada: Final Results of Countervailing Duty Expedited Review,* 84 FR 32121 at 32122 (July 5, 2019). However, entries of merchandise produced by any other entity and exported by North American Forest Products Ltd. (located in Saint-Quentin, New Brunswick) (or its cross-owned affiliates) or produced by North American Forest Products Ltd. (located in Saint-Quentin, New Brunswick) (or its cross-owned affiliates) and exported by another entity are subject to this administrative review.

[10] Entries of merchandise produced and exported by Roland Boulanger & Cie Ltée (and its cross-owned affiliates) are not subject to countervailing duties because this producer/exporter combination was excluded from the order. *See Certain Softwood Lumber Products from Canada: Final Results of Countervailing Duty Expedited Review,* 84 FR 32121 at 32122 (July 5, 2019). However, entries of merchandise produced by any other entity and exported by Roland Boulanger & Cie Ltée (or its cross-owned affiliates) or produced by Roland Boulanger & Cie Ltée (or its cross-owned affiliates) and exported by another entity are subject to this administrative review.

[11] Entries of merchandise produced and exported by Scierie Alexandre Lemay & Fils Inc. (and its cross-owned affiliates) are not subject to countervailing duties because this producer/exporter combination was excluded from the order. *See Certain Softwood Lumber Products from Canada: Final Results of Countervailing Duty Expedited Review,* 84 FR 32121 at 32122 (July 5, 2019). However, entries of merchandise produced by any other entity and exported by Scierie Alexandre Lemay & Fils Inc. (or its cross-owned affiliates) or produced by Scierie Alexandre Lemay & Fils Inc. (or its cross-owned affiliates) and exported by another entity are subject to this administrative review.

Duty Absorption Reviews

During any administrative review covering all or part of a period falling between the first and second or third and fourth anniversary of the publication of an AD order under 19 CFR 351.211 or a determination under 19 CFR 351.218(f)(4) to continue an order or suspended investigation (after sunset review), Commerce, if requested by a domestic interested party within 30 days of the date of publication of the notice of initiation of the review, will determine whether AD duties have been absorbed by an exporter or producer subject to the review if the subject merchandise is sold in the United States through an importer that is affiliated with such exporter or producer. The request must include the name(s) of the exporter or producer for which the inquiry is requested.

Gap Period Liquidation

For the first administrative review of any order, there will be no assessment of antidumping or countervailing duties on entries of subject merchandise entered, or withdrawn from warehouse, for consumption during the relevant ''gap'' period of the order (*i.e.,* the period following the expiry of provisional measures and before definitive measures were put into place), if such a gap period is applicable to the POR.

Administrative Protective Orders and Letters of Appearance

Interested parties must submit applications for disclosure under administrative protective orders in accordance with the procedures outlined in Commerce's regulations at 19 CFR 351.305. Those procedures apply to administrative reviews included in this notice of initiation. Parties wishing to participate in any of these administrative reviews should ensure that they meet the requirements of these procedures (*e.g.,* the filing of separate letters of appearance as discussed at 19 CFR 351.103(d)).

Factual Information Requirements

Commerce's regulations identify five categories of factual information in 19 CFR 351.102(b)(21), which are summarized as follows: (i) Evidence submitted in response to questionnaires; (ii) evidence submitted in support of allegations; (iii) publicly available information to value factors under 19 CFR 351.408(c) or to measure the adequacy of remuneration under 19 CFR 351.511(a)(2); (iv) evidence placed on the record by Commerce; and (v) evidence other than factual information described in (i)–(iv). These regulations require any party, when submitting factual information, to specify under which subsection of 19 CFR 351.102(b)(21) the information is being submitted and, if the information is submitted to rebut, clarify, or correct factual information already on the record, to provide an explanation identifying the information already on the record that the factual information seeks to rebut, clarify, or correct. The regulations, at 19 CFR 351.301, also provide specific time limits for such factual submissions based on the type of factual information being submitted. Please review the *Final Rule,*[12] available at *https://enforcement.trade.gov/frn/2013/1304frn/2013-08227.txt,* prior to submitting factual information in this segment.

Any party submitting factual information in an AD or CVD proceeding must certify to the accuracy and completeness of that information using the formats provided at the end of the *Final Rule.*[13] Commerce intends to reject factual submissions in any proceeding segments if the submitting party does not comply with applicable certification requirements.

[12] *See Certification of Factual Information To Import Administration During Antidumping and Countervailing Duty Proceedings,* 78 FR 42678 (July 17, 2013) (*Final Rule*); *see also* the frequently asked questions regarding the *Final Rule,* available at *https://enforcement.trade.gov/tlei/notices/factual_info_final_rule_FAQ_07172013.pdf.*

[13] *See* section 782(b) of the Act; *see also Final Rule;* and the frequently asked questions regarding the *Final Rule,* available at *https://enforcement.trade.gov/tlei/notices/factual_info_final_rule_FAQ_07172013.pdf.*

Extension of Time Limits Regulation

Parties may request an extension of time limits before a time limit established under Part 351 expires, or as otherwise specified by Commerce.[14] In general, an extension request will be considered untimely if it is filed after the time limit established under Part 351 expires. For submissions which are due from multiple parties simultaneously, an extension request will be considered untimely if it is filed after 10:00 a.m. on the due date. Examples include, but are not limited to: (1) Case and rebuttal briefs, filed pursuant to 19 CFR 351.309; (2) factual information to value factors under 19 CFR 351.408(c), or to measure the adequacy of remuneration under 19 CFR 351.511(a)(2), filed pursuant to 19 CFR 351.301(c)(3) and rebuttal, clarification and correction filed pursuant to 19 CFR 351.301(c)(3)(iv); (3) comments concerning the selection of a surrogate country and surrogate values and rebuttal; (4) comments concerning CBP data; and (5) Q&V questionnaires. Under certain circumstances, Commerce may elect to specify a different time limit by which extension requests will be considered untimely for submissions which are due from multiple parties simultaneously. In such a case, Commerce will inform parties in the letter or memorandum setting forth the deadline (including a specified time) by which extension requests must be filed to be considered timely. This policy also requires that an extension request must be made in a separate, stand-alone submission, and clarifies the circumstances under which Commerce will grant untimely-filed requests for the extension of time limits. Please review the *Final Rule,* available at *https://www.gpo.gov/fdsys/pkg/FR-2013-09-20/html/2013-22853.htm,* prior to submitting factual information in these segments.

These initiations and this notice are in accordance with section 751(a) of the Act (19 U.S.C. 1675(a)) and 19 CFR 351.221(c)(1)(i).

Dated: March 4, 2020.

Scot Fullerton,

Associate Deputy Assistant Secretary for Antidumping and Countervailing Duty Operations.

[FR Doc. 2020–04841 Filed 3–9–20; 8:45 am]

BILLING CODE 3510–DS–P

[14] *See* 19 CFR 351.302.

DEPARTMENT OF COMMERCE

National Oceanic and Atmospheric Administration

[RTID 0648–XA072]

Endangered and Threatened Species; Take of Anadromous Fish

AGENCY: National Marine Fisheries Service (NMFS), National Oceanic and Atmospheric Administration (NOAA), Department of Commerce.

ACTION: Notice; availability of a proposed evaluation and pending determination (PEPD) and draft environmental assessment (EA) for public comment.

SUMMARY: Notice is hereby given that a PEPD and draft EA are available for public comment on two Hatchery and Genetic Management Plans (HGMPs) in the Yankee Fork River and Panther Creek. The HGMPs were submitted for review and determination under the Endangered Species Act (ESA) 4(d) Rule.

DATES: Comments must be received at the appropriate address (see **ADDRESSES**) no later than 5 p.m. Pacific time on April 9, 2020. Comments received after this date may not be considered.

ADDRESSES: Written responses should be addressed to the NMFS Sustainable Fisheries Division, 1201 NE Lloyd Blvd., Portland, OR 97232. Comments may be submitted by email. The mailbox address for providing email comments is: *Hatcheries.Public.Comment@noaa.gov.* Include in the subject line of the email comment the following identifier: Yankee Fork and Panther Creek DEA Comments.

FOR FURTHER INFORMATION CONTACT: Brett Farman at (503) 231–6222 or by email at *brett.farman@noaa.gov.*

SUPPLEMENTARY INFORMATION:

ESA-Listed Species Covered in This Notice

- *Chinook salmon (Oncorhynchus tshawytscha):* Threatened, naturally and artificially propagated
  - *Snake River Fall-run (O. tshawytscha):* Threatened, naturally and artificially propagated
  - *Snake River Spring/Summer run:* Threatened, naturally and artificially propagated
- *Snake River Steelhead (O. mykiss):* Threatened, naturally and artificially propagated
- *Snake River Sockeye (O. nerka):* Endangered, naturally and artificially propagated

Background

Section 9 of the ESA and Federal regulations prohibit the ''taking'' of a species listed as endangered or threatened. The term ''take'' is defined under the ESA to mean harass, harm, pursue, hunt, shoot, wound, kill, trap, capture, or collect, or to attempt to engage in any such conduct. NMFS may make exceptions to the take prohibitions in section 9 of the ESA for programs that are approved by NMFS under the 4(d) Rule (50 CFR 223.203(b)(6)).

The Shoshone-Bannock Tribe and the Idaho Department of Fish and Game have submitted two HGMPs under Limit 6 of the 4(d) Rule. The programs are funded by the Bonneville Power Administration (BPA) and the United States Fish and Wildlife Service (USFWS). Prior to making a final determination on the HMGPs, NMFS must take comments on how the HGMPs addresses the criteria in Limit 6 of the 4(d) Rule.

The submitted HGMPs describe two hatchery programs in the Snake River basin along with the associated monitoring and evaluation activities. The programs integrate natural-origin broodstock to supplement natural salmon populations. The programs are intended to provide fishing opportunities for tribes and states, mitigate for fish losses caused by the construction and operation of the dams on the Lower Snake River, and contribute to the survival and recovery of Snake River Spring/summer Chinook salmon in the Snake River basin.

Authority: 16 U.S.C. 1531 *et seq.;* 16 U.S.C. 742a *et seq.*

Dated: March 5, 2020.

Angela Somma,

Chief, Endangered Species Division, Office of Protected Resources, National Marine Fisheries Service.

[FR Doc. 2020–04865 Filed 3–9–20; 8:45 am]

BILLING CODE 3510–22–P

COMMODITY FUTURES TRADING COMMISSION

Agency Information Collection Activities: Notice of Intent To Renew Collection 3038–0093, Part 40, Provisions Common to Registered Entities

AGENCY: Commodity Futures Trading Commission.

ACTION: Notice.

SUMMARY: The Commodity Futures Trading Commission (''Commission'' or ''CFTC'') is announcing an opportunity for public comment on the proposed

collection of certain information by the agency. Under the Paperwork Reduction Act (''PRA''), Federal agencies are required to publish notice in the **Federal Register** concerning each proposed collection of information, including each proposed extension of an existing collection, and to allow 60 days for public comment. This notice solicits comments on collections of information provided for by Part 40 of the Commission's regulations, Provisions Common to Registered Entities.

DATES: Comments must be submitted on or before May 11, 2020.

ADDRESSES: You may submit comments, identified by OMB Control No. 3038–0093 by any of the following methods:

- The Agency's website, at *http://comments.cftc.gov/.* Follow the instructions for submitting comments through the website.
- *Mail:* Christopher Kirkpatrick, Secretary of the Commission, Commodity Futures Trading Commission, Three Lafayette Centre, 1155 21st Street NW, Washington, DC 20581.
- *Hand Delivery/Courier:* Same as Mail above.

Please submit your comments using only one method and identify that it is for the renewal of Collection Number 3038–0093.

All comments must be submitted in English, or if not, accompanied by an English translation. Comments will be posted as received to *http://www.cftc.gov.* You should submit only information that you wish to make available publicly. If you wish the Commission to consider information that you believe is exempt from disclosure under the Freedom of Information Act, a petition for confidential treatment of the exempt information may be submitted according to the procedures established in § 145.9 of the Commission's regulations.[1]

The Commission reserves the right, but shall have no obligation, to review, pre-screen, filter, redact, refuse or remove any or all of your submission from *http://www.cftc.gov* that it may deem to be inappropriate for publication, such as obscene language. All submissions that have been redacted or removed that contain comments on the merits of the Information Collection Request will be retained in the public comment file and will be considered as required under the Administrative Procedure Act and other applicable laws, and may be accessible under the Freedom of Information Act.

FOR FURTHER INFORMATION CONTACT: Jeanette Curtis, Special Counsel, Division of Market Oversight, Commodity Futures Trading Commission, (202) 418–5092; email: *jcurtis@cftc.gov,* or Philip Raimondi, Special Counsel, Division of Market Oversight, Commodity Futures Trading Commission, (202) 418–5717; email: *praimondi@cftc.gov.*

SUPPLEMENTARY INFORMATION: Under the PRA, 44 U.S.C. 3501 *et seq.,* Federal agencies must obtain approval from the Office of Management and Budget (OMB) for each collection of information they conduct or sponsor. ''Collection of Information'' is defined in 44 U.S.C. 3502(3) and 5 CFR 1320.3 and includes agency requests or requirements that members of the public submit reports, keep records, or provide information to a third party. Section 3506(c)(2)(A) of the PRA, 44 U.S.C. 3506(c)(2)(A), requires Federal agencies to provide a 60-day notice in the **Federal Register** concerning each proposed collection of information before submitting the collection to OMB for approval. To comply with this requirement, the CFTC is publishing notice of the proposed collection of information listed below. An agency may not conduct or sponsor, and a person is not required to respond to, a collection of information unless it displays a currently valid OMB control number.

Title: Part 40, Provisions Common to Registered Entities (OMB Control No. 3038–0093). This is a request for extension of a currently approved information collection.

Abstract: This collection of information involves the collection and submission to the Commission of information from registered entities concerning new products, rules, and rule amendments pursuant to the procedures outlined in §§ 40.2, 40.3, 40.5, 40.6, and 40.10 found in 17 CFR part 40.

With respect to the collection of information, the CFTC invites comments on:

- Whether the proposed collection of information is necessary for the proper performance of the functions of the Commission, including whether the information will have a practical use;
- The accuracy of the Commission's estimate of the burden of the proposed collection of information, including the validity of the methodology and assumptions used;
- Ways to enhance the quality, usefulness, and clarity of the information to be collected; and
- Ways to minimize the burden of collection of information on those who are to respond, including through the use of appropriate automated electronic, mechanical, or other technological collection techniques or other forms of information technology; *e.g.,* permitting electronic submission of responses.

Burden Statement: Registered entities must comply with certification and approval requirements which include an explanation and analysis when seeking to implement new products, rules, and rule amendments, including changes to product terms and conditions. The Commission's regulations §§ 40.2, 40.3, 40.5, 40.6 and 40.10 provide procedures for the submission of rules and rule amendments by designated contract markets, swap execution facilities, derivatives clearing organizations, and swap data repositories. They establish the procedures for submitting the ''written certification'' required by Section 5c of the Act. In connection with a product or rule certification, the registered entity must provide a concise explanation and analysis of the submission and its compliance with statutory provisions of the Act. Accordingly, new rules or rule amendments must be accompanied by concise explanations and analyses of the purposes, operations, and effects of the submissions. This information may be submitted as part of the same submission containing the required ''written certification.'' The Commission estimates the average burden of this collection of information as follows:

- Rules 40.2, 40.3, 40.5, and 40.6

Estimated Number of Respondents: 70.

Annual Responses by each Respondent: 100.

Estimated Hours per Response: 2.

Estimated Total Hours per Year: 14,000.

- Rule 40.10

Estimated Number of Respondents: 3.

Annual Responses by each Respondent: 2.

Estimated Hours per Response: 5.

Estimated Total Hours per Year: 30.

(Authority: 44 U.S.C. 3501 *et seq.*)

Dated: March 5, 2020.

Robert Sidman,

Deputy Secretary of the Commission.

[FR Doc. 2020–04817 Filed 3–9–20; 8:45 am]

BILLING CODE 6351–01–P

[1] 17 CFR 145.9.

DEPARTMENT OF DEFENSE

Office of the Secretary

Charter Renewal of Department of Defense Federal Advisory Committees

AGENCY: Department of Defense.

ACTION: Renewal of Federal Advisory Committee.

SUMMARY: The Department of Defense (DoD) is publishing this notice to announce that it is renewing the charter for the Department of Defense Advisory Committee on Military Personnel Testing (''the Committee'').

FOR FURTHER INFORMATION CONTACT: Jim Freeman, Advisory Committee Management Officer for the Department of Defense, 703–692–5952.

SUPPLEMENTARY INFORMATION: The Committee's charter is being renewed in accordance with the Federal Advisory Committee Act (FACA) (5 U.S.C. Appendix) and 41 CFR 102–3.50(d). The Committee's charter and contact information for the Committee's Designated Federal Officer (DFO) can be found at *http://www.facadatabase.gov/.*

The Committee provides the Secretary of Defense and the Deputy Secretary of Defense, through the Under Secretary of Defense for Personnel and Readiness, independent advice and recommendations on matters and policies relating to military personnel testing for selection and classification.

The Committee shall be composed of no more than seven members who are appointed in accordance with DoD policies and procedures. All members of the Committee are appointed to provide advice on behalf of the Government on the basis of their best judgment without representing any particular point of view and in a manner that is free from conflict of interest. Except for reimbursement of official Committee-related travel and per diem, Committee members serve without compensation.

The public or interested organizations may submit written statements to the Committee membership about the Committee's mission and functions. Written statements may be submitted at any time or in response to the stated agenda of planned meeting of the Committee. All written statements shall be submitted to the DFO for the Committee, and this individual will ensure that the written statements are provided to the membership for their consideration.

Dated: March 5, 2020.

Aaron T. Siegel,

Alternate OSD Federal Register Liaison Officer, Department of Defense.

[FR Doc. 2020–04852 Filed 3–9–20; 8:45 am]

BILLING CODE 5001–06–P

DEPARTMENT OF DEFENSE

Office of the Secretary

Charter Renewal of Department of Defense Federal Advisory Committees

AGENCY: Department of Defense.

ACTION: Renewal of Federal Advisory Committee.

SUMMARY: The Department of Defense (DoD) is publishing this notice to announce that it is renewing the charter for the Department of Defense Advisory Committee on Women in the Services (''the Committee'').

FOR FURTHER INFORMATION CONTACT: Jim Freeman, Advisory Committee Management Officer for the Department of Defense, 703–692–5952.

SUPPLEMENTARY INFORMATION: The Committee's charter is being renewed in accordance with the Federal Advisory Committee Act (FACA) of 1972 (5 U.S.C. Appendix) and 41 CFR 102–3.50(d). The Committee's charter and contact information for the Committee's Designated Federal Officer (DFO) can be found at *http://www.facadatabase.gov/.*

The Committee provides the Secretary of Defense and the Deputy Secretary of Defense, through the Under Secretary of Defense for Personnel and Readiness, independent advice and recommendations on matters and policies relating to recruitment and retention, employment, integration, well-being and treatment of women in the Armed Forces of the United States.

The Committee shall be composed of no more than 20 members to include prominent civilian women and men who are from academia, industry, public service and other professions. All members of the Committee are appointed to provide advice on behalf of the Government on the basis of their best judgment without representing any particular point of view and in a manner that is free from conflict of interest. Except for reimbursement of official Committee-related travel and per diem, Committee members serve without compensation.

The public or interested organizations may submit written statements to the Committee membership about the Committee's mission and functions. Written statements may be submitted at any time or in response to the stated agenda of planned meeting of the Committee. All written statements shall be submitted to the DFO for the Committee, and this individual will ensure that the written statements are provided to the membership for their consideration.

Dated: March 5, 2020.

Aaron T. Siegel,

Alternate OSD Federal Register Liaison Officer, Department of Defense.

[FR Doc. 2020–04876 Filed 3–9–20; 8:45 am]

BILLING CODE 5001–06–P

DEPARTMENT OF EDUCATION

Applications for New Awards; Magnet Schools Assistance Program

AGENCY: Office of Elementary and Secondary Education, Department of Education.

ACTION: Notice.

SUMMARY: The Department of Education (Department) is issuing a notice inviting applications (NIA) for fiscal year (FY) 2020 for the Magnet Schools Assistance Program (MSAP), Catalog of Federal Domestic Assistance (CFDA) number 84.165A. This notice relates to the approved information collection under OMB control number 1855–0011.

DATES:

Application Available: March 10, 2020.

Deadline for Notice of Intent to Apply: April 9, 2020.

Deadline for Transmittal of Applications: May 26, 2020.

Deadline for Intergovernmental Review: July 23, 2020.

Pre-Application Webinar Information: No later than March 16, 2020, MSAP will hold a webinar to provide technical assistance to interested applicants. Detailed information regarding this webinar will be provided on the MSAP web page at *https://oese.ed.gov/offices/office-of-discretionary-grants-support-services/school-choice-improvement-programs/magnet-school-assistance-program-msap/.* A recording of this webinar will be available on the MSAP web page following the session.

ADDRESSES: For the addresses for obtaining and submitting an application, please refer to our Common Instructions for Applicants to Department of Education Discretionary Grant Programs, published in the **Federal Register** on February 13, 2019 (84 FR 3768), and available at *www.govinfo.gov/content/pkg/FR-2019-02-13/pdf/2019-02206.pdf.*

FOR FURTHER INFORMATION CONTACT: Gillian Cohen-Boyer, U.S. Department of Education, 400 Maryland Avenue SW, Room 3C134, Washington, DC 20202–5970. Telephone: (202) 401–1259. Email: *msap.team@ed.gov.*

If you use a telecommunications device for the deaf (TDD) or a text telephone (TTY), call the Federal Relay

Service (FRS), toll free, at 1–800–877–8339.

SUPPLEMENTARY INFORMATION:

Full Text of Announcement

I. Funding Opportunity Description

Purpose of Program: MSAP, authorized under title IV, part D of the Elementary and Secondary Education Act, as amended by the Every Student Succeeds Act (ESEA), provides grants to local educational agencies (LEAs) and consortia of LEAs to support magnet schools under an approved, required, or voluntary desegregation plan.

Under the ESEA, MSAP prioritizes the creation and replication of evidence-based (as defined in this notice) magnet programs and magnet schools that seek to reduce, eliminate, or prevent minority group isolation by taking into account socioeconomic diversity.

Grantees may use grant funds for activities intended to improve students' academic achievement, including acquiring books, materials, technology, and equipment to support a rigorous, theme-based academic program; conducting planning and promotional activities; providing professional development opportunities for teachers to implement the academic program; and paying the salaries of effective teachers and other instructional personnel. MSAP also enables LEAs to support student transportation, provided the transportation costs are sustainable and the costs do not constitute a significant portion of grant funds.

Background: MSAP seeks to reduce, eliminate or prevent minority group isolation by funding projects carried out by LEAs or consortia of LEAs that propose to implement magnet schools with academically challenging, innovative instructional approaches, or specialized curricula that are, consistent with constitutional and statutory limitations, ''designed to bring students from different social, economic, ethnic, and racial backgrounds together.'' [1]

Through the implementation of high-demand programming, using sophisticated technology and curricula, magnet schools have often served as a conduit for innovative, theme-based instruction. For example, 61 percent of the 145 schools currently supported by MSAP grants include science, technology, engineering, and mathematics (STEM) themes in their programming, which aligns with the Secretary's Supplemental Priority 6, Promoting STEM Education.[2]

While some grantees have effectively implemented innovative, theme-based programming and successfully diversified their schools, other grantees have struggled to meet their desegregation goals. Significant variations in grantees' ability to increase academic achievement also persist. Therefore, we continue to use selection criteria to focus on projects that seek to promote academic achievement and reduce, eliminate, or prevent minority group isolation. The Department encourages applicants to propose projects of high interest to students and families that offer rigorous curriculum with authentic theme-based experiences and to form integrated partnerships that will attract and retain students from different racial and socioeconomic backgrounds. In this year's competition we have added criteria specific to partnerships. Specifically, we encourage applicants to propose robust partnerships that offer relevant opportunities for students and teachers, such as mentoring, apprenticeships, certifications, and theme-related, industry-specific experiences.

In addition, as part of MSAP's focus on improving academic achievement and reducing, eliminating, or preventing minority group isolation, consistent with constitutional and statutory limitations, we encourage applicants, through competitive preference points, to propose projects that would increase racial integration by taking into account socioeconomic diversity. Beyond proposing quality projects that have the potential to attract students from various backgrounds, we encourage applicants to propose a range of activities that incorporate a focus on socioeconomic and racial diversity, such as: Establishing and participating in a voluntary, inter-district transfer program for students from varied neighborhoods; making strategic decisions regarding magnet school sites to maximize the potential diversity of the school given the school's neighboring communities; revising school boundaries, attendance zones, or feeder patterns to take into account residential segregation or other related issues; and formal merging or coordinating among multiple educational jurisdictions in order to pool resources, provide transportation, and expand high-quality public school options for lower-income students. Applicants that choose to address this priority should identify the criteria they intend to use to determine students' socioeconomic status (*e.g.,* family income level, education level of the students' parent or guardian, other factors identified by the LEA, or a combination thereof) and clearly describe how their approach to incorporating socioeconomic diversity is part of their overall effort to eliminate, reduce, or prevent minority group isolation.

To encourage systemic and timely change, the Department is interested in proposals that establish new school assignment or admissions policies for schools that seek to increase the number of low-income students schools serve through new student assignment policies that consider the socioeconomic status of students' households, students residing in neighborhoods experiencing concentrated poverty, and students from low-performing schools (among other factors). As applicable, each applicant should coordinate with other relevant government entities—such as housing and transportation authorities, among others—given the impact that other public policies have on the composition of a school's student body. Such proposals may be addressed in response to Competitive Preference Priority 4.

This NIA also includes a competitive preference priority for MSAP projects that would be carried out in areas that overlap with a Qualified Opportunity Zone (QOZ). *Public Law (Pub. L.) 115–97* authorized the designation of QOZs to promote economic development and job creation in distressed communities through preferential tax treatment for investors. A list of QOZs is available at *www.cdfifund.gov/Pages/Opportunity-Zones.aspx;* applicants may also determine whether a particular area overlaps with a QOZ using the National Center of Education Statistics' map located at: *https://nces.ed.gov/programs/maped/LocaleLookup/.* To receive competitive preference points under this priority, applicants must provide the Department with the census tract number of the QOZ they plan to serve and describe the services they will provide. For the purpose of this competition, applicants should consider the area where their LEA is located to be the area that must overlap with a QOZ; an LEA may be considered to overlap with a QOZ even if only one magnet school included in the current MSAP grant application is located in a QOZ.

Lastly, with this year's competition, the Department also aims to improve MSAP's short- and longer-term outcomes, as well as generate evidence to inform future efforts, by encouraging

[1] 20 U.S.C. 7231(b)(2).

[2] STEM is also a national priority. For more details, see ''Charting A Course For Success: America's Strategy For STEM Education,'' *www.whitehouse.gov/wp-content/uploads/2018/12/STEM-Education-Strategic-Plan-2018.pdf* (December 2018).

applicants to propose (1) projects that are supported by prior evidence, and (2) robust evaluations of their proposed MSAP projects that would yield promising evidence (as defined in this notice) from which future MSAP applicants could learn. Along these lines, we include selection factors that encourage applicants to provide a conceptual framework (logic model) as part of their applications and propose evaluations designed to produce promising evidence. Each proposed project should be supported by a logic model with clearly defined outcomes that will inform the project's performance measures and evaluation. In addition, through Competitive Preference Priority 2, we encourage applicants to implement activities that are evidence-based in their proposed MSAP project schools and we encourage applicants to submit supporting evidence that corresponds to the highest levels of evidence available.

Priorities: This competition includes five competitive preference priorities. In accordance with 34 CFR 75.105(b)(2)(ii), Competitive Preference Priorities 1 and 3 are from the MSAP regulations at 34 CFR 280.32. In accordance with 34 CFR 75.105(b)(2)(iv), Competitive Preference Priorities 2 and 4 are from section 4406 of the ESEA, 20 U.S.C. 7231e. Competitive Preference Priority 5 is from the notice of final priority published in the **Federal Register** on November 27, 2019 (84 FR 65300) (Opportunity Zones NFP).

Competitive Preference Priorities: These priorities are competitive preference priorities. Under 34 CFR 75.105(c)(2)(i), we award one additional point to an application that meets Competitive Preference Priority 1; up to two additional points to an application, depending on how well the application meets Competitive Preference Priority 2; up to three additional points to an application, depending on how well the application meets Competitive Preference Priority 3; up to two additional points to an application, depending on how well the application meets Competitive Preference Priority 4; and three additional points to an application that meets Competitive Preference Priority 5. Depending on how well the application meets these priorities, an application may be awarded up to a total of 11 additional points. Applicants may apply under any, all, or none of the competitive preference priorities. The maximum possible points for each competitive preference priority are indicated in parentheses following the name of the priority. These points are in addition to any points the application earns under the selection criteria in this notice.

These priorities are:

Competitive Preference Priority 1—Need for Assistance (0 or 1 additional points).

The Secretary evaluates the applicant's need for assistance by considering—

(1) The costs of fully implementing the magnet schools project as proposed;

(2) The resources available to the applicant to carry out the project if funds under the program were not provided;

(3) The extent to which the costs of the project exceed the applicant's resources; and

(4) The difficulty of effectively carrying out the approved plan and the project for which assistance is sought, including consideration of how the design of the magnet school project—*e.g.,* the type of program proposed, the location of the magnet school within the LEA—impacts on the applicant's ability to successfully carry out the approved plan.

Competitive Preference Priority 2—New or Revised Magnet Schools Projects and Strength of Evidence to Support Proposed Projects (0 to 2 additional points).

The Secretary determines the extent to which the applicant proposes to carry out a new, evidence-based magnet school program or significantly revise an existing magnet school program, using evidence-based methods and practices, as available, or replicate an existing magnet school program that has a demonstrated record of success in increasing student academic achievement and reducing isolation of minority groups.

Competitive Preference Priority 3—Selection of Students (0 to 3 additional points).

The Secretary determines the extent to which the applicant proposes to select students to attend magnet schools by methods such as lottery, rather than through academic examination.

Competitive Preference Priority 4—Increasing Racial Integration and Socioeconomic Diversity (0 to 2 additional points).

The Secretary determines the extent to which the applicant proposes to increase racial integration by taking into account socioeconomic diversity in designing and implementing magnet school programs.

Competitive Preference Priority 5—Spurring Investment in Qualified Opportunity Zones (0 or 3 additional points).

Under this priority, an applicant must demonstrate that the area in which the applicant proposes to provide services overlaps with a QOZ, as designated by the Secretary of the Treasury under section 1400Z–1 of the Internal Revenue Code. An applicant must—

(1) Provide the census tract number of the QOZ(s) in which it proposes to provide services; and

(2) Describe how the applicant will provide services in the QOZ(s).

Definitions: The definition of ''evidence-based'' is from 20 U.S.C. 7801. The remaining definitions are from 34 CFR 77.1(c).

Demonstrates a rationale means a key project component included in the project's logic model is informed by research or evaluation findings that suggest the project component is likely to improve relevant outcomes.

Evidence-based means an activity, strategy, or intervention that—

(i) Demonstrates a statistically significant effect on improving student outcomes or other relevant outcomes based on—

(A) Strong evidence from at least one well-designed and well-implemented experimental study;

(B) Moderate evidence from at least one well-designed and well-implemented quasi-experimental study; or

(C) Promising evidence from at least one well-designed and well-implemented correlational study with statistical controls for selection bias; or

(ii)(A) Demonstrates a rationale based on high-quality research findings or positive evaluation that such activity, strategy, or intervention is likely to improve student outcomes or other relevant outcomes; and

(B) Includes ongoing efforts to examine the effects of such activity, strategy, or intervention.

Experimental study means a study that is designed to compare outcomes between two groups of individuals (such as students) that are otherwise equivalent except for their assignment to either a treatment group receiving a project component or a control group that does not. Randomized controlled trials, regression discontinuity design studies, and single-case design studies are the specific types of experimental studies that, depending on their design and implementation (*e.g.,* sample attrition in randomized controlled trials and regression discontinuity design studies), can meet What Works Clearinghouse (WWC) standards without reservations as described in the WWC Handbook:

(i) A randomized controlled trial employs random assignment of, for example, students, teachers, classrooms, or schools to receive the project

component being evaluated (the treatment group) or not to receive the project component (the control group).

(ii) A regression discontinuity design study assigns the project component being evaluated using a measured variable (*e.g.,* assigning students reading below a cutoff score to tutoring or developmental education classes) and controls for that variable in the analysis of outcomes.

(iii) A single-case design study uses observations of a single case (*e.g.,* a student eligible for a behavioral intervention) over time in the absence and presence of a controlled treatment manipulation to determine whether the outcome is systematically related to the treatment.

Logic model (also referred to as a theory of action) means a framework that identifies key project components of the proposed project (*i.e.,* the active ''ingredients'' that are hypothesized to be critical to achieving the relevant outcomes) and describes the theoretical and operational relationships among the key project components and relevant outcomes.

Project component means an activity, strategy, intervention, process, product, practice, or policy included in a project. Evidence may pertain to an individual project component or to a combination of project components (*e.g.,* training teachers on instructional practices for English learners and follow-on coaching for these teachers).

Promising evidence means that there is evidence of the effectiveness of a key project component in improving a relevant outcome, based on a relevant finding from one of the following:

(i) A practice guide prepared by WWC reporting a ''strong evidence base'' or ''moderate evidence base'' for the corresponding practice guide recommendation;

(ii) An intervention report prepared by the WWC reporting a ''positive effect'' or ''potentially positive effect'' on a relevant outcome with no reporting of a ''negative effect'' or ''potentially negative effect'' on a relevant outcome; or

(iii) A single study assessed by the Department, as appropriate, that—

(A) Is an experimental study, a quasi-experimental design study, or a well-designed and well-implemented correlational study with statistical controls for selection bias (*e.g.,* a study using regression methods to account for differences between a treatment group and a comparison group); and

(B) Includes at least one statistically significant and positive (*i.e.,* favorable) effect on a relevant outcome.

Quasi-experimental design study means a study using a design that attempts to approximate an experimental study by identifying a comparison group that is similar to the treatment group in important respects. This type of study, depending on design and implementation (*e.g.,* establishment of baseline equivalence of the groups being compared), can meet WWC standards with reservations, but cannot meet WWC standards without reservations, as described in the WWC Handbook.

Relevant outcome means the student outcome(s) or other outcome(s) the key project component is designed to improve, consistent with the specific goals of the program.

What Works Clearinghouse Handbook (WWC Handbook) means the standards and procedures set forth in the WWC Procedures and Standards Handbook, Version 3.0 or Version 2.1 (incorporated by reference, see 34 CFR 77.2). Study findings eligible for review under WWC standards can meet WWC standards without reservations, meet WWC standards with reservations, or not meet WWC standards. WWC practice guides and intervention reports include findings from systematic reviews of evidence as described in the Handbook documentation.

Note: The What Works Clearinghouse Procedures and Standards Handbook (Version 3.0), as well as the more recent What Works Clearinghouse Handbooks released in October 2017 (Version 4.0) and January 2020 (Version 4.1), are available at: *https://ies.ed.gov/ncee/wwc/Handbooks.*

Program Authority: 20 U.S.C. 7231–7231j.

Applicable Regulations: (a) The Education Department General Administrative Regulations in 34 CFR parts 75, 77, 79, 81, 82, 84, 97, 98, and 99. (b) The Office of Management and Budget Guidelines to Agencies on Governmentwide Debarment and Suspension (Nonprocurement) in 2 CFR part 180, as adopted and amended as regulations of the Department in 2 CFR part 3485. (c) The Uniform Administrative Requirements, Cost Principles, and Audit Requirements for Federal Awards in 2 CFR part 200, as adopted and amended as regulations of the Department in 2 CFR part 3474. (d) The regulations for this program in 34 CFR part 280. (e) The Opportunity Zones NFP.

II. Award Information

Type of Award: Discretionary grants.

Estimated Available Funds: $23,500,887.

Contingent upon the availability of funds and the quality of applications, we may make additional awards in FY 2021 from the list of unfunded applications from this competition.

Estimated Range of Awards: $700,000–$4,000,000 per budget year.

Maximum Award: We will not make an award to an LEA or a consortium of LEAS exceeding $15,000,000 for the project period. Grantees may not expend more than 50 percent of the year one grant funds and not more than 15 percent of year two and three grant funds on planning activities. Professional development is not considered to be a planning activity.

Note: Yearly award amounts may vary.

Estimated Number of Awards: 7–9.

Note: The Department is not bound by any estimates in this notice.

Project Period: Up to 60 months.

III. Eligibility Information

1. *Eligible Applicants:* LEAs or consortia of LEAs implementing a desegregation plan as specified in section III. 3 of this notice.

2. *Cost Sharing or Matching:* This program does not require cost sharing or matching.

3. *Application Requirement:* Under section 4405(b)(1)(A) of the ESEA, applicants must describe how a grant awarded under this competition will be used to promote desegregation and include any available evidence on how the proposed magnet school programs will increase interaction among students of different social, economic, ethnic, and racial backgrounds. If such evidence is not available, applicants must include a rationale, based on current research, for how the proposed magnet school programs will increase interaction among students of different social, economic, ethnic, and racial backgrounds. Applicants should address this application requirement in the project narrative and, as appropriate, the logic model.

4. *Other:* Applicants must submit with their applications one of the following types of desegregation plans to establish eligibility to receive MSAP assistance: (a) A desegregation plan required by a court order; (b) a desegregation plan required by a State agency or an official of competent jurisdiction; (c) a desegregation plan required by the Department's Office for Civil Rights (OCR) under Title VI of the Civil Rights Act of 1964 (Title VI); or (d) a voluntary desegregation plan adopted by the applicant and submitted to the Department for approval as part of the application. Under the MSAP regulations, applicants are required to

provide all of the information required in 34 CFR 280.20(a) through (g) in order to satisfy the civil rights eligibility requirements found in 34 CFR 280.2(a)(2) and (b).

In addition to the particular data and other items for required and voluntary desegregation plans described in the application package, an application must include—

- Projected enrollment by race and ethnicity for magnet and feeder schools;
- Signed civil rights assurances (included in the application package); and
- An assurance that the desegregation plan is being implemented or will be implemented if the application is funded.

Required Desegregation Plans

1. Desegregation plans required by a court order. An applicant that submits a desegregation plan required by a court order must submit complete and signed copies of all court documents demonstrating that the magnet schools are a part of the approved desegregation plan. Examples of the types of documents that would meet this requirement include a Federal or State court order that establishes specific magnet schools, amends a previous order or orders by establishing additional or different specific magnet schools, requires or approves the establishment of one or more unspecified magnet schools, or that authorizes the inclusion of magnet schools at the discretion of the applicant.

2. Desegregation plans required by a State agency or official of competent jurisdiction. An applicant submitting a desegregation plan ordered by a State agency or official of competent jurisdiction must provide documentation that shows that the desegregation plan was ordered based upon a determination that State law was violated. In the absence of this documentation, the applicant should consider its desegregation plan to be a voluntary plan and submit the data and information necessary for voluntary plans.

3. Desegregation plans required by Title VI. An applicant that submits a desegregation plan required by OCR under Title VI must submit a complete copy of the desegregation plan demonstrating that magnet schools are part of the approved plan or that the plan authorizes the inclusion of magnet schools at the discretion of the applicant.

4. Modifications to required desegregation plans. A previously approved desegregation plan that does not include the magnet school or program for which the applicant is now seeking assistance must be modified to include the magnet school component. The modification to the desegregation plan must be approved by the court, agency, or official that originally approved the plan. An applicant that wishes to modify a previously approved OCR Title VI desegregation plan to include different or additional magnet schools must submit the proposed modification for review and approval to the OCR regional office that approved its original plan.

An applicant should indicate in its application if it is seeking to modify its previously approved desegregation plan. However, all applicants must submit proof of approval of all modifications to their plans to the Department by June 11, 2020. Proof of plan modifications should be mailed to: Gillian Cohen-Boyer, U.S. Department of Education, 400 Maryland Avenue SW, Room 3C134, Washington, DC 20202–5970. Telephone: (202) 401–1259. Email: *msap.team@ed.gov.*

Voluntary Desegregation Plans

A voluntary desegregation plan must be approved by the Department each time an application is submitted for funding. Even if the Department has approved a voluntary desegregation plan in an LEA in the past, to be reviewed, the desegregation plan must be resubmitted with the application, by the application deadline.

An applicant's voluntary desegregation plan must describe how the LEA defines or identifies minority group isolation, demonstrate how the LEA will reduce, eliminate, or prevent minority group isolation for each magnet school in the proposed magnet school application, and, if relevant, at identified feeder schools, demonstrate that the proposed voluntary desegregation plan is adequate under Title VI.

Complete and accurate enrollment forms and other information as required by the regulations in 34 CFR 280.20(f) and (g) for applicants with voluntary desegregation plans are critical to the Department's determination of an applicant's eligibility under a voluntary desegregation plan (specific requirements are detailed in the application package).

Voluntary desegregation plan applicants must submit documentation of school board approval or documentation of other official adoption of the plan as required by the regulations in 34 CFR 280.20(f)(2) when submitting their application. LEAs that were previously under a required desegregation plan, but that have achieved unitary status and so are voluntary desegregation plan applicants, typically would not need to include court orders. Rather, such applications should provide the documentation discussed in this section.

5. *Single-Sex Programs:* An applicant proposing to operate a single-sex magnet school or a coeducational magnet school that offers single-sex classes or extracurricular activities, will undergo a review of its proposed single-sex educational program to determine compliance with applicable nondiscrimination laws, including the Equal Protection Clause of the U.S. Constitution (as interpreted in *United States* v. *Virginia,* 518 U.S. 515 (1996), and other cases) and Title IX of the Education Amendments of 1972 (20 U.S.C. 1681, *et seq.*) and its regulations—including 34 CFR 106.34. This review may require the applicant to provide additional fact-specific information about the single-sex program. Please see the application package for additional information about an application proposing a single-sex magnet school or a coeducational magnet school offering single-sex classes or extracurricular activities.

IV. Application and Submission Information

1. *Application Submission Instructions:* Applicants are required to follow the Common Instructions for Applicants to Department of Education Discretionary Grant Programs, published in the **Federal Register** on February 13, 2019 (84 FR 3768), and available at *www.govinfo.gov/content/pkg/FR-2019-02-13/pdf/2019-02206.pdf,* which contain requirements and information on how to submit an application.

2. *Submission of Proprietary Information:* Given the types of projects that may be proposed in applications for the MSAP, your application may include business information that you consider proprietary. In 34 CFR 5.11, we define ''business information'' and describe the process we use in determining whether any of that information is proprietary, and thus protected from disclosure under Exemption 4 of the Freedom of Information Act (5 U.S.C. 552, as amended).

Because we plan to make successful applications available to the public, you may wish to request confidentiality of business information.

Consistent with Executive Order 12600, please designate in your application any information that you believe is exempt from disclosure under

Exemption 4. In the appropriate Appendix section of your application, under ''Other Attachments Form,'' please list the page number or numbers on which we can find this information. For additional information, please see 34 CFR 5.11(c).

3. *Intergovernmental Review:* This program is subject to Executive Order 12372 and the regulations in 34 CFR part 79. Information about Intergovernmental Review of Federal Programs under Executive Order 12372 is in the application package for this competition.

4. *Funding Restrictions:* We specify unallowable costs in 34 CFR 280.41. We reference additional regulations outlining funding restrictions in the *Applicable Regulations* section of this notice.

5. *Recommended Page Limit:* The application narrative is where you, the applicant, address the selection criteria that reviewers use to evaluate your application. We recommend that you (1) limit the application narrative to 150 pages and (2) use the following standards:

- A ''page'' is 8.5″ x 11″, on one side only, with 1″ margins at the top, bottom, and both sides.
- Double space (no more than three lines per vertical inch) all text in the application narrative, including titles, headings, footnotes, quotations, references, and captions, as well as all text in charts, tables, figures, and graphs.
- Use a font that is either 12 point or larger or no smaller than 10 pitch (characters per inch).
- Use one of the following fonts: Times New Roman, Courier, Courier New, or Arial.

The recommended page limit does not apply to Part I, the cover sheet; Part II, the budget section, including the narrative budget justification; Part IV, the assurances, certifications, the desegregation plan and related information, and the tables used to respond to Competitive Preference Priorities 2 and 3; or the one-page abstract, the resumes, or letters of support. However, the recommended page limit does apply to all of the application narrative in Part III.

6. *Notice of Intent To Apply:* The Department will be able to review grant applications more efficiently if we know the approximate number of applicants that intend to apply. Therefore, we strongly encourage each potential applicant to notify the Department of their intent to submit an application. To do so, please submit your intent to apply for funding by completing a web-based form at *https://oese.ed.gov/offices/office-of-discretionary-grants-support-services/school-choice-improvement-programs/magnet-school-assistance-program-msap/.* Applicants that do not notify the Department of their intent to apply may still apply for funding.

V. Application Review Information

1. *Selection Criteria:* The selection criteria are from 34 CFR 75.210, 280.30, and 280.31, and sections 4401 and 4405 of the ESEA.

The maximum score for all of the selection criteria is 100 points. The maximum score for each criterion is included in parentheses following the title of the specific selection criterion. Each criterion also includes the factors that reviewers will consider in determining the extent to which an applicant meets the criterion.

Points awarded under these selection criteria are in addition to any points an applicant earns under the competitive preference priorities in this notice. The maximum score that an application may receive under the competitive preference priorities and the selection criteria is 111 points.

(a) *Desegregation (30 points).*

The Secretary reviews each application to determine the quality of the desegregation-related activities and determines the extent to which the applicant demonstrates—

(1) The effectiveness of its plan to recruit students from different social, economic, ethnic, and racial backgrounds into the magnet schools. (34 CFR 280.31)

(2) How it will foster interaction among students of different social, economic, ethnic, and racial backgrounds in classroom activities, extracurricular activities, or other activities in the magnet schools (or, if appropriate, in the schools in which the magnet school programs operate). (34 CFR 280.31)

(3) How it will ensure equal access and treatment for eligible project participants who have been traditionally underrepresented in courses or activities offered as part of the magnet school, *e.g.,* women and girls in mathematics, science, or technology courses, and disabled students. (34 CFR 280.31)

(4) The effectiveness of all other desegregation strategies proposed by the applicant for the elimination, reduction, or prevention of minority group isolation in elementary schools and secondary schools with substantial proportions of minority students. (Section 4401(b)(1) of the ESEA)

(b) *Quality of Project Design (30 points).*

The Secretary reviews each application to determine the quality of the project design. In determining the quality of the design of the proposed project, the Secretary considers the following factors:

(1) The manner and extent to which the magnet school program will increase student academic achievement in the instructional area or areas offered by the school, including any evidence, or if such evidence is not available, a rationale based on current research findings, to support such description. (Sections 4405(b)(1)(E)(i) and 4405(b)(1)(B) of the ESEA)

(2) The extent to which the training or professional development services to be provided by the proposed project are of sufficient quality, intensity, and duration to lead to improvements in practice among the recipients of those services. (34 CFR 75.210)

(3) The extent to which the services to be provided by the proposed project involve the collaboration of appropriate partners for maximizing the effectiveness of project services. (34 CFR 75.210)

(4) The extent to which there is a conceptual framework underlying the proposed research or demonstration activities and the quality of that framework. (34 CFR 75.210)

(c) *Quality of Management Plan (15 points) (34 CFR 75.210).*

The Secretary considers the quality of the management plan for the proposed project. In determining the quality of the management plan for the proposed project, the Secretary considers the following factors:

(1) The adequacy of the management plan to achieve the objectives of the proposed project on time and within budget, including clearly defined responsibilities, timelines, and milestones for accomplishing project tasks.

(2) How the applicant will ensure that a diversity of perspectives are brought to bear in the operation of the proposed project, including those of parents, teachers, the business community, a variety of disciplinary and professional fields, recipients or beneficiaries of services, or others, as appropriate.

(3) The extent to which the applicant demonstrates that it has the resources to operate the project beyond the length of the grant, including a multi-year financial and operating model and accompanying plan; the demonstrated commitment of any partners; evidence of broad support from stakeholders (*e.g.,* State educational agencies, teachers' unions) critical to the project's long-term success; or more than one of these types of evidence.

(d) *Quality of Personnel (5 points) (34 CFR 280.31).*

(1) The Secretary reviews each application to determine the qualifications of the personnel the applicant plans to use on the project. The Secretary determines the extent to which—

(a) The project director (if one is used) is qualified to manage the project;

(b) Other key personnel are qualified to manage the project; and

(c) Teachers who will provide instruction in participating magnet schools are qualified to implement the special curriculum of the magnet schools.

(2) To determine personnel qualifications, the Secretary considers experience and training in fields related to the objectives of the project, including the key personnel's knowledge of and experience in curriculum development and desegregation strategies.

(e) *Quality of Project Evaluation (20 points) (34 CFR 75.210).*

The Secretary considers the quality of the evaluation to be conducted of the proposed project. In determining the quality of the evaluation, the Secretary considers the following factors:

(1) The extent to which the methods of evaluation will, if well implemented, produce promising evidence (as defined in 34 CFR 77.1(c)) about the project's effectiveness.

(2) The extent to which the methods of evaluation include the use of objective performance measures that are clearly related to the intended outcomes of the project and will produce quantitative and qualitative data to the extent possible.

(3) The extent to which the costs are reasonable in relation to the objectives, design, and potential significance of the proposed project.

2. *Review and Selection Process:* We remind potential applicants that in reviewing applications in any discretionary grant competition, the Secretary may consider, under 34 CFR 75.217(d)(3), the past performance of the applicant in carrying out a previous award, such as the applicant's use of funds, achievement of project objectives, and compliance with grant conditions. The Secretary may also consider whether the applicant failed to submit a timely performance report or submitted a report of unacceptable quality.

In addition, in making a competitive grant award, the Secretary requires various assurances, including those applicable to Federal civil rights laws that prohibit discrimination in programs or activities receiving Federal financial assistance from the Department (34 CFR 100.4, 104.5, 106.4, 108.8, and 110.23).

3. *Risk Assessment and Specific Conditions:* Consistent with 2 CFR 200.205, before awarding grants under this competition the Department conducts a review of the risks posed by applicants. Under 2 CFR 3474.10, the Secretary may impose specific conditions and, in appropriate circumstances, high-risk conditions on a grant if the applicant or grantee is not financially stable; has a history of unsatisfactory performance; has a financial or other management system that does not meet the standards in 2 CFR part 200, subpart D; has not fulfilled the conditions of a prior grant; or is otherwise not responsible.

4. *Integrity and Performance System:* If you are selected under this competition to receive an award that over the course of the project period may exceed the simplified acquisition threshold (currently $250,000) under 2 CFR 200.205(a)(2), we must make a judgment about your integrity, business ethics, and record of performance under Federal awards—that is, the risk posed by you as an applicant—before we make an award. In doing so, we must consider any information about you that is in the integrity and performance system (currently referred to as the Federal Awardee Performance and Integrity Information System (FAPIIS), accessible through the System for Award Management. You may review and comment on any information about yourself that a Federal agency previously entered and that is currently in FAPIIS.

Please note that, if the total value of your currently active grants, cooperative agreements, and procurement contracts from the Federal Government exceeds $10,000,000, the reporting requirements in 2 CFR part 200, Appendix XII, require you to report certain integrity information to FAPIIS semiannually. Please review the requirements in 2 CFR part 200, Appendix XII, if this grant plus all the other Federal funds you receive exceed $10,000,000.

VI. Award Administration Information

1. *Award Notices:* If your application is successful, we notify your U.S. Representative and U.S. Senators and send you a Grant Award Notification (GAN); or we may send you an email containing a link to access an electronic version of your GAN. We may notify you informally as well.

If your application is not evaluated or not selected for funding, we notify you.

2. *Administrative and National Policy Requirements:* We identify administrative and national policy requirements in the application package and reference these and other requirements in the *Applicable Regulations* section of this notice.

We reference the regulations outlining the terms and conditions of an award in the *Applicable Regulations* section of this notice and include these and other specific conditions in the GAN. The GAN also incorporates your approved application as part of your binding commitments under the grant.

3. *Open Licensing Requirements:* Unless an exception applies, if you are awarded a grant under this competition, you will be required to openly license to the public grant deliverables created in whole, or in part, with Department grant funds. When the deliverable consists of modifications to pre-existing works, the license extends only to those modifications that can be separately identified and only to the extent that open licensing is permitted under the terms of any licenses or other legal restrictions on the use of pre-existing works. Additionally, a grantee or subgrantee that is awarded competitive grant funds must have a plan to disseminate these public grant deliverables. This dissemination plan can be developed and submitted after your application has been reviewed and selected for funding. For additional information on the open licensing requirements, please refer to 2 CFR 3474.20(c).

4. *Reporting:* (a) If you apply for a grant under this competition, you must ensure that you have in place the necessary processes and systems to comply with the reporting requirements in 2 CFR part 170 should you receive funding under the competition. This does not apply if you have an exception under 2 CFR 170.110(b).

(b) At the end of your project period, you must submit a final performance report, including financial information, as directed by the Secretary. If you receive a multiyear award, you must submit an annual performance report that provides the most current performance and financial expenditure information as directed by the Secretary under 34 CFR 75.118. The Secretary may also require more frequent performance reports under 34 CFR 75.720(c). For specific requirements on reporting, please go to *www.ed.gov/fund/grant/apply/appforms/appforms.html.*

(c) If awarded a grant, applicants that responded to the selection criterion (e)(1), Quality of the Project Evaluation, must also submit a final evaluation report addressing the study to produce promising evidence.

5. *Performance Measures:* We have established the following five performance measures for the MSAP:

(a) The number and percentage of magnet schools receiving assistance whose student enrollment reduces, eliminates, or prevents minority group isolation.

(b) The percentage increase of students from major racial and ethnic groups in magnet schools receiving assistance who score proficient or above on State assessments in reading/language arts as compared to previous year's data.

(c) The percentage increase of students from major racial and ethnic groups in magnet schools receiving assistance who score proficient or above on State assessments in mathematics as compared to previous year's data.

(d) The percentage of magnet schools that received assistance that are still operating magnet school programs three years after Federal funding ends.

(e) The percentage of magnet schools that received assistance that meet the State's annual measurable objectives and, for high schools, graduation rate targets at least three years after Federal funding ends.

Note: Recognizing that States are no longer required to report annual measurable objectives to the Department under the ESEA, we include this performance measure in order to ensure MSAP grantees monitor and report high school graduation rates. States must establish and measure against ambitious, long-term goals; we encourage MSAP grantees to consider these State goals and incorporate them into their annual performance reporting as appropriate.

6. *Continuation Awards:* In making a continuation award under 34 CFR 75.253, the Secretary considers, among other things: Whether a grantee has made substantial progress in achieving the goals and objectives of the project; whether the grantee has expended funds in a manner that is consistent with its approved application and budget; and, if the Secretary has established performance measurement requirements, the performance targets in the grantee's approved application.

In making a continuation award, the Secretary also considers whether the grantee is operating in compliance with the assurances in its approved application, including those applicable to Federal civil rights laws that prohibit discrimination in programs or activities receiving Federal financial assistance from the Department (34 CFR 100.4, 104.5, 106.4, 108.8, and 110.23).

VII. Other Information

Accessible Format: Individuals with disabilities can obtain this document and a copy of the application package in an accessible format (*e.g.,* braille, large print, audiotape, or compact disc) on request to the program contact person listed under **FOR FURTHER INFORMATION CONTACT**.

Electronic Access to This Document: The official version of this document is the document published in the **Federal Register**. You may access the official edition of the **Federal Register** and the Code of Federal Regulations at *www.govinfo.gov.* At this site you can view this document, as well as all other documents of this Department published in the **Federal Register**, in text or Portable Document Format (PDF). To use PDF, you must have Adobe Acrobat Reader, which is available free at the site.

You may also access documents of the Department published in the **Federal Register** by using the article search feature at *www.federalregister.gov.* Specifically, through the advanced search feature at this site, you can limit your search to documents published by the Department.

Dated: March 5, 2020.

Frank T. Brogan,

Assistant Secretary for Elementary and Secondary Education.

[FR Doc. 2020–04885 Filed 3–9–20; 8:45 am]

BILLING CODE 4000–01–P

DEPARTMENT OF ENERGY

Federal Energy Regulatory Commission

[Docket No. EL20–28–000]

Edenton Solar, LLC Complainant, v. Virginia Electric and Power Company Respondent; Notice of Complaint

Take notice that on February 28, 2020, pursuant to section 206 of the Federal Power Act and Rule 206 of the Rules of Practice and Procedures of the Federal Energy Regulatory Commission (Commission), 18 CFR 385.206, Edenton Solar, LLC (Edenton Solar or Complainant) filed a complaint against Virginia Electric and Power Company (VEPCO or Respondent), requesting the Commission find that Edenton Solar has met the requirements for commencement of service under the Agreement for the Sale of Electrical Output to VEPCO dated November 9, 2017, as more fully explained in the complaint.

The Complainant certifies that copies of the complaint were served on the contacts for the Respondent as listed on the Commission's list of Corporate Officials.

Any person desiring to intervene or to protest this filing must file in accordance with Rules 211 and 214 of the Commission's Rules of Practice and Procedure (18 CFR 385.211, 385.214). Protests will be considered by the Commission in determining the appropriate action to be taken, but will not serve to make protestants parties to the proceeding. Any person wishing to become a party must file a notice of intervention or motion to intervene, as appropriate. All interventions, or protests must be filed on or before the comment date.

The Commission encourages electronic submission of protests and interventions in lieu of paper using the ''eFiling'' link at *http://www.ferc.gov.* Persons unable to fileelectronically should submit an original and 5 copies of the protest or intervention to the Federal Energy Regulatory Commission, 888 First Street NE Washington, DC 20426.

This filing is accessible on-line at *http://www.ferc.gov,* using the ''eLibrary'' link and is available for electronic review in the Commission's Public Reference Room in Washington, DC. There is an ''eSubscription'' link on the website that enables subscribers to receive email notification when a document is added to a subscribed docket(s). For assistance with any FERC Online service, please email *FERCOnlineSupport@ferc.gov,* or call (866) 208–3676 (toll free). For TTY, call (202) 502–8659.

Comment Date: 5:00 p.m. Eastern Time on March 13, 2020.

Dated: March 4, 2020.

Nathaniel J. Davis, Sr.,

Deputy Secretary.

[FR Doc. 2020–04873 Filed 3–9–20; 8:45 am]

BILLING CODE 6717–01–P

DEPARTMENT OF ENERGY

Federal Energy Regulatory Commission

[Docket No. ER20–1086–000]

Pegasus Wind A, LLC; Supplemental Notice That Initial Market-Based Rate Filing Includes Request for Blanket Section 204 Authorization

This is a supplemental notice in the above-referenced proceeding of Pegasus Wind A, LLC's application for market-based rate authority, with an accompanying rate tariff, noting that such application includes a request for

blanket authorization, under 18 CFR part 34, of future issuances of securities and assumptions of liability.

Any person desiring to intervene or to protest should file with the Federal Energy Regulatory Commission, 888 First Street NE, Washington, DC 20426, in accordance with Rules 211 and 214 of the Commission's Rules of Practice and Procedure (18 CFR 385.211 and 385.214). Anyone filing a motion to intervene or protest must serve a copy of that document on the Applicant.

Notice is hereby given that the deadline for filing protests with regard to the applicant's request for blanket authorization, under 18 CFR part 34, of future issuances of securities and assumptions of liability, is March 24, 2020.

The Commission encourages electronic submission of protests and interventions in lieu of paper, using the FERC Online links at *http://www.ferc.gov*. To facilitate electronic service, persons with internet access who will eFile a document and/or be listed as a contact for an intervenor must create and validate an eRegistration account using the eRegistration link. Select the eFiling link to log on and submit the intervention or protests.

Persons unable to file electronically should submit an original and 5 copies of the intervention or protest to the Federal Energy Regulatory Commission, 888 First Street NE, Washington, DC 20426.

The filings in the above-referenced proceeding are accessible in the Commission's eLibrary system by clicking on the appropriate link in the above list. They are also available for electronic review in the Commission's Public Reference Room in Washington, DC. There is an eSubscription link on the website that enables subscribers to receive email notification when a document is added to a subscribed docket(s). For assistance with any FERC Online service, please email *FERCOnlineSupport@ferc.gov.* or call (866) 208–3676 (toll free). For TTY, call (202) 502–8659.

Dated: March 4, 2020.

Nathaniel J. Davis, Sr.,

Deputy Secretary.

[FR Doc. 2020–04874 Filed 3–9–20; 8:45 am]

BILLING CODE 6717–01–P

DEPARTMENT OF ENERGY

Federal Energy Regulatory Commission

Combined Notice of Filings

Take notice that the Commission has received the following Natural Gas Pipeline Rate and Refund Report filings:

Docket Numbers: RP20–623–000.
Applicants: Tennessee Gas Pipeline Company, L.L.C.
Description: § 4(d) Rate Filing: Volume No. 2—Elements SP327109 & NJR SP354349 to be effective 4/1/2020.
Filed Date: 3/2/20.
Accession Number: 20200302–5001.
Comments Due: 5 p.m. ET 3/16/20.

Docket Numbers: RP20–624–000.
Applicants: Golden Pass Pipeline LLC.
Description: Compliance filing Golden Pass PIpeline LLC Annual Retainage Report to be effective 4/1/2020.
Filed Date: 3/2/20.
Accession Number: 20200302–5004.
Comments Due: 5 p.m. ET 3/16/20.

Docket Numbers: RP20–625–000.
Applicants: Equitrans, L.P.
Description: § 4(d) Rate Filing: Negotiated Capacity Release Agreements—3/1/2020 to be effective 3/1/2020.
Filed Date: 3/2/20.
Accession Number: 20200302–5053.
Comments Due: 5 p.m. ET 3/16/20.

Docket Numbers: RP20–626–000.
Applicants: UGI Mt. Bethel Pipeline Company, LLC.
Description: Annual Retainage Adjustment Filing of UGI Mt. Bethel Pipeline Company, LLC under RP20–626.
Filed Date: 2/28/20.
Accession Number: 20200228–5381.
Comments Due: 5 p.m. ET 3/11/20.

Docket Numbers: RP20–628–000.
Applicants: Gulf South Pipeline Company, LLC.
Description: § 4(d) Rate Filing: Cap Rel Neg Agmts (Atlanta 8438 releases eff 3–1–2020) to be effective 3/1/2020.
Filed Date: 3/2/20.
Accession Number: 20200302–5174.
Comments Due: 5 p.m. ET 3/16/20.

Docket Numbers: RP20–629–000.
Applicants: Gulf South Pipeline Company, LLC.
Description: § 4(d) Rate Filing: Cap Rel Neg Rate Agmt (Constellation 52312 to Exelon 52345) to be effective 3/1/2020.
Filed Date: 3/2/20.
Accession Number: 20200302–5179.
Comments Due: 5 p.m. ET 3/16/20.

Docket Numbers: RP20–630–000.
Applicants: Gulf South Pipeline Company, LLC.
Description: § 4(d) Rate Filing: Non-conforming Agmt (TECO 52302) to be effective 4/1/2020.
Filed Date: 3/2/20.
Accession Number: 20200302–5181.
Comments Due: 5 p.m. ET 3/16/20.

Docket Numbers: RP20–632–000.
Applicants: Gulf South Pipeline Company, LLC.
Description: § 4(d) Rate Filing: Cap Rel Neg Rate Agmt (Calyx 51780 to BP 52120) to be effective 3/1/2020.
Filed Date: 3/2/20.
Accession Number: 20200302–5281.
Comments Due: 5 p.m. ET 3/16/20.

Docket Numbers: RP20–633–000.
Applicants: UGI Sunbury, LLC.
Description: § 4(d) Rate Filing: Annual Retainage Adjustment 2020 to be effective 4/1/2020.
Filed Date: 3/2/20.
Accession Number: 20200302–5284.
Comments Due: 5 p.m. ET 3/16/20.

Docket Numbers: RP20–634–000.
Applicants: UGI Sunbury, LLC.
Description: Compliance filing Cost and Revenue Study per CP15–525–000.
Filed Date: 3/2/20.
Accession Number: 20200302–5289.
Comments Due: 5 p.m. ET 3/16/20.

Docket Numbers: RP20–635–000.
Applicants: KO Transmission Company.
Description: § 4(d) Rate Filing: 2020 Transportation Retainage Adjustment to be effective 4/1/2020.
Filed Date: 3/2/20.
Accession Number: 20200302–5294.
Comments Due: 5 p.m. ET 3/16/20.

Docket Numbers: RP20–636–000.
Applicants: ANR Pipeline Company.
Description: § 4(d) Rate Filing: ANR Fuel Filing 2020 (Part 1) to be effective 4/1/2020.
Filed Date: 3/2/20.
Accession Number: 20200302–5316.
Comments Due: 5 p.m. ET 3/16/20.

Docket Numbers: RP20–637–000.
Applicants: Empire Pipeline, Inc.
Description: § 4(d) Rate Filing: Fuel Tracker (Empire Tracking Supply Storage Rates) to be effective 2/1/2020.
Filed Date: 3/2/20.
Accession Number: 20200302–5330.
Comments Due: 5 p.m. ET 3/16/20.

Docket Numbers: RP20–638–000.
Applicants: Enable Mississippi River Transmission, LLC.
Description: § 4(d) Rate Filing: Negotiated Rate Filing—WRB RP18–923 & RP20–131 Settlement to be effective 3/1/2020.
Filed Date: 3/2/20.
Accession Number: 20200302–5341.
Comments Due: 5 p.m. ET 3/16/20.

Docket Numbers: RP20–639–000.
Applicants: Southern Star Central Gas Pipeline, Inc.

Description: § 4(d) Rate Filing: Vol. 2—Negotiated Rate Agreements—Scout Energy Group & Conexus Energy to be effective 3/1/2020.
Filed Date: 3/2/20.
Accession Number: 20200302–5342.
Comments Due: 5 p.m. ET 3/16/20.

Docket Numbers: RP20–641–000.
Applicants: Black Hills Shoshone Pipeline, LLC
Description: Annual Adjustment of Lost and Unaccounted for Gas Percentage of Black Hills Shoshone Pipeline, LLC under RP20–641.
Filed Date: 3/2/20.
Accession Number: 20200302–5359.
Comments Due: 5 p.m. ET 3/16/20.

Docket Numbers: RP20–642–000.
Applicants: Vector Pipeline L.P.
Description: Annual Report of Operational Purchases and Sales of Vector Pipeline L.P. under RP20–642.
Filed Date: 3/2/20.
Accession Number: 20200302–5363.
Comments Due: 5 p.m. ET 3/16/20.

The filings are accessible in the Commission's eLibrary system by clicking on the links or querying the docket number.

Any person desiring to intervene or protest in any of the above proceedings must file in accordance with Rules 211 and 214 of the Commission's Regulations (18 CFR 385.211 and 385.214) on or before 5:00 p.m. Eastern time on the specified comment date. Protests may be considered, but intervention is necessary to become a party to the proceeding.

eFiling is encouraged. More detailed information relating to filing requirements, interventions, protests, service, and qualifying facilities filings can be found at: *http://www.ferc.gov/docs-filing/efiling/filing-req.pdf.* For other information, call (866) 208–3676 (toll free). For TTY, call (202) 502–8659.

Dated: March 3, 2020.

Nathaniel J. Davis, Sr.,

Deputy Secretary.

[FR Doc. 2020–04867 Filed 3–9–20; 8:45 am]

BILLING CODE 6717–01–P

DEPARTMENT OF ENERGY

Federal Energy Regulatory Commission

Combined Notice of Filings #1

Take notice that the Commission received the following electric corporate filings:

Docket Numbers: EC20–43–000.
Applicants: Pacific Gas and Electric Company, PG&E Corporation.
Description: Application for Authorization Under Section 203 of the Federal Power Act, et al. of Pacific Gas and Electric Company, et al.
Filed Date: 3/2/20.
Accession Number: 20200302–5374.
Comments Due: 5 p.m. ET 3/23/20.

Take notice that the Commission received the following exempt wholesale generator filings:

Docket Numbers: EG20–88–000.
Applicants: Frontier Windpower II, LLC.
Description: Self-Certification of Exempt Wholesale Generator of Frontier Windpower II, LLC.
Filed Date: 3/3/20.
Accession Number: 20200303–5085.
Comments Due: 5 p.m. ET 3/24/20.

Take notice that the Commission received the following electric rate filings:

Docket Numbers: ER04–835–010.
Applicants: California Independent System Operator Corp.
Description: Supplemental Informational Compliance Filing of the California Independent System Operator Corporation.
Filed Date: 3/2/20.
Accession Number: 20200302–5427.
Comments Due: 5 p.m. ET 3/23/20.

Docket Numbers: ER20–1149–000.
Applicants: Midcontinent Independent System Operator, Inc., ALLETE, Inc.
Description: § 205(d) Rate Filing: 2020–03–03_SA 3433 MP–GRE Construction & Payment Agrmt (Benton County) to be effective 3/4/2020.
Filed Date: 3/3/20.
Accession Number: 20200303–5066.
Comments Due: 5 p.m. ET 3/24/20.

Docket Numbers: ER20–1150–000.
Applicants: The Dayton Power and Light Company, PJM Interconnection, L.L.C.
Description: § 205(d) Rate Filing: Dayton submits revisions to OATT Att. H–15 and Schedules re: Rate Changes to be effective 5/3/2020.
Filed Date: 3/3/20.
Accession Number: 20200303–5080.
Comments Due: 5 p.m. ET 3/24/20.

Docket Numbers: ER20–1151–000.
Applicants: PJM Interconnection, L.L.C.
Description: § 205(d) Rate Filing: Original WMPA Service Agreement No. 5603; Queue No. AD2–065 to be effective 2/6/2020.
Filed Date: 3/3/20.
Accession Number: 20200303–5094.
Comments Due: 5 p.m. ET 3/24/20.

Docket Numbers: ER20–1152–000.
Applicants: Pacific Gas and Electric Company.
Description: § 205(d) Rate Filing: City of Palo Alto Work Performance Agreement (TO SA 292) to be effective 3/4/2020.
Filed Date: 3/3/20.
Accession Number: 20200303–5133.
Comments Due: 5 p.m. ET 3/24/20

Docket Numbers: ER20–1153–000.
Applicants: Public Service Company of Colorado.
Description: § 205(d) Rate Filing: 2020–03–03 OATT_Att N–LGIP-GenRplcmt-Sec 30 to be effective 5/18/2020.
Filed Date: 3/3/20.
Accession Number: 20200303–5156.
Comments Due: 5 p.m. ET 3/24/20.

Docket Numbers: ER20–1154–000.
Applicants: Midcontinent Independent System Operator, Inc., Otter Tail Power Company.
Description: § 205(d) Rate Filing: 2020–03–03_SA 3434 OTP-Dakota Range III FSA (J488) to be effective 3/4/2020.
Filed Date: 3/3/20.
Accession Number: 20200303–5184.
Comments Due: 5 p.m. ET 3/24/20.

The filings are accessible in the Commission's eLibrary system by clicking on the links or querying the docket number.

Any person desiring to intervene or protest in any of the above proceedings must file in accordance with Rules 211 and 214 of the Commission's Regulations (18 CFR 385.211 and 385.214) on or before 5:00 p.m. Eastern time on the specified comment date. Protests may be considered, but intervention is necessary to become a party to the proceeding.

eFiling is encouraged. More detailed information relating to filing requirements, interventions, protests, service, and qualifying facilities filings can be found at: *http://www.ferc.gov/docs-filing/efiling/filing-req.pdf.* For other information, call (866) 208–3676 (toll free). For TTY, call (202) 502–8659.

Dated: March 3, 2020.

Nathaniel J. Davis, Sr.,

Deputy Secretary.

[FR Doc. 2020–04880 Filed 3–9–20; 8:45 am]

BILLING CODE 6717–01–P

DEPARTMENT OF ENERGY

Federal Energy Regulatory Commission

[Docket No. RM98–1–000]

Records Governing Off-the-Record Communications; Public Notice

This constitutes notice, in accordance with 18 CFR 385.2201(b), of the receipt of prohibited and exempt off-the-record communications.

Order No. 607 (64 FR 51222, September 22, 1999) requires Commission decisional employees, who make or receive a prohibited or exempt off-the-record communication relevant to the merits of a contested proceeding, to deliver to the Secretary of the Commission, a copy of the communication, if written, or a summary of the substance of any oral communication.

Prohibited communications are included in a public, non-decisional file associated with, but not a part of, the decisional record of the proceeding. Unless the Commission determines that the prohibited communication and any responses thereto should become a part of the decisional record, the prohibited off-the-record communication will not be considered by the Commission in reaching its decision. Parties to a proceeding may seek the opportunity to respond to any facts or contentions made in a prohibited off-the-record communication and may request that the Commission place the prohibited communication and responses thereto in the decisional record. The Commission will grant such a request only when it determines that fairness so requires. Any person identified below as having made a prohibited off-the-record communication shall serve the document on all parties listed on the official service list for the applicable proceeding in accordance with Rule 2010, 18 CFR 385.2010.

Exempt off-the-record communications are included in the decisional record of the proceeding, unless the communication was with a cooperating agency as described by 40 CFR 1501.6, made under 18 CFR 385.2201(e) (1) (v).

The following is a list of off-the-record communications recently received by the Secretary of the Commission. The communications listed are grouped by docket numbers in ascending order. These filings are available for electronic review at the Commission in the Public Reference Room or may be viewed on the Commission's website at *http://www.ferc.gov* using the eLibrary link. Enter the docket number, excluding the last three digits, in the docket number field to access the document. For assistance, please contact FERC Online Support at *FERCOnlineSupport@ferc.gov* or toll free at (866) 208–3676, or for TTY, contact (202) 502–8659.

Docket No.	File date	Presenter or requester
Prohibited: NONE		
Exempt:		
1. CP16–9–000	2–24–2020	U.S. Congress[1].
2. CP16–22–000	2–25–2020	U.S. Senator Sherrod Brown.

Dated: March 3, 2020.

Nathaniel J. Davis, Sr.,

Deputy Secretary.

[FR Doc. 2020–04869 Filed 3–9–20; 8:45 am]

BILLING CODE 6717–01–P

DEPARTMENT OF ENERGY

Federal Energy Regulatory Commission

[Docket No. RP20–631–000]

Tennessee Gas Pipeline Company, L.L.C.; Notice of Petition for Declaratory Order

Take notice that on February 28, 2020, pursuant to Rule 207 of the Federal Energy Regulatory Commission's (Commission) Rules of Practice and Procedure and Section 284.501 of the Commission's regulations, Tennessee Gas Pipeline Company, L.L.C. (TGP) filed a petition seeking authorization to charge market-based rates for a proposed firm storage service to be offered using storage capacity and deliverability from a firm storage contract TGP has entered into with Pine Prairie Energy Center, LLC, all as more fully explained in the petition.

Any person desiring to intervene or to protest this filing must file in accordance with Rules 211 and 214 of the Commission's Rules of Practice and Procedure (18 CFR 385.211, 385.214). Protests will be considered by the Commission in determining the appropriate action to be taken, but will not serve to make protestants parties to the proceeding. Any person wishing to become a party must file a notice of intervention or motion to intervene, as appropriate. Such notices, motions, or protests must be filed on or before the comment date. Anyone filing a motion to intervene or protest must serve a copy of that document on the Petitioner.

The Commission encourages electronic submission of protests and interventions in lieu of paper using the ''eFiling'' link at *http://www.ferc.gov.* Persons unable to file electronically should submit an original and 5 copies of the protest or intervention to the Federal Energy Regulatory Commission, 888 First Street NE, Washington, DC 20426.

This filing is accessible on-line at *http://www.ferc.gov,* using the ''eLibrary'' link and is available for review in the Commission's Public Reference Room in Washington, DC. There is an ''eSubscription'' link on the website that enables subscribers to receive email notification when a document is added to a subscribed docket(s). For assistance with any FERC Online service, please email *FERCOnlineSupport@ferc.gov,* or call (866) 208–3676 (toll free). For TTY, call (202) 502–8659.

Comment Date: 5:00 p.m. Eastern time on March 13, 2020.

Dated: March 4, 2020.

Nathaniel J. Davis, Sr.,

Deputy Secretary.

[FR Doc. 2020–04879 Filed 3–9–20; 8:45 am]

BILLING CODE 6717–01–P

DEPARTMENT OF ENERGY

Federal Energy Regulatory Commission

[Project No. 2246–065]

Yuba County Water Agency; Notice of Petition for Waiver Determination

Take notice that on August 22, 2019, Yuba County Water Agency d/b/a Yuba Water Agency, applicant for relicensing the Yuba River Development Project No. 2246, filed a ''Request for Determination of Waiver of Section 401 Water Quality Certification.'' Yuba County Water Agency requests that the Commission declare that the California State Water Resources Control Board has waived its authority to issue a certification for the Yuba River Development Project under Section 401 of the Clean Water Act, 33

[1] U.S. Senator Edward J. Markey, U.S. Senator Elizabeth Warren, and Congressman Stephen F. Lynon.

U.S.C. 1341(a)(1), as more fully explained in the filing.

Any person wishing to comment on the petition may do so.[1] The deadline for filing comments is 30 days from the issuance of this notice. The Commission encourages electronic submission of comments in lieu of paper using the ''eFiling'' link at *http://www.ferc.gov*. Persons unable to file electronically should send comments to the following address: Federal Energy Regulatory Commission, 888 First Street NE, Washington, DC 20426. Be sure to reference the project docket number (P–2246–065) with your submission.

This filing is accessible on-line at *http://www.ferc.gov,* using the ''eLibrary'' link and is available for review in the Commission's Public Reference Room in Washington, DC. There is an ''eSubscription'' link on the website that enables subscribers to receive email notification when a document is added to a subscribed docket(s). For assistance with any FERC Online service, please email *FERCOnlineSupport@ferc.gov,* or call (866) 208–3676 (toll free). For TTY, call (202) 502–8659.

Comment Date: 5:00 p.m. Eastern Time on April 2, 2020.

Dated: March 3, 2020.

Nathaniel J. Davis, Sr.,

Deputy Secretary.

[FR Doc. 2020–04868 Filed 3–9–20; 8:45 am]

BILLING CODE 6717–01–P

[1] Yuba County Water Agency's request is part of its relicensing proceeding in Project No. 2246–065. Thus, any person that intervened in the relicensing proceeding is already a party. The filing of the request does not trigger a new opportunity to intervene.

DEPARTMENT OF ENERGY

Federal Energy Regulatory Commission

Combined Notice of Filings #1

Take notice that the Commission received the following electric rate filings:

Docket Numbers: ER20–714–001.
Applicants: Whitetail Solar 1, LLC.
Description: Compliance filing: Revised Rate Schedule FERC No. 1 to be effective 3/1/2020.
Filed Date: 3/4/20.
Accession Number: 20200304–5102.
Comments Due: 5 p.m. ET 3/25/20.

Docket Numbers: ER20–1155–000.
Applicants: Midcontinent Independent System Operator, Inc., Otter Tail Power Company.
Description: § 205(d) Rate Filing: 2020–03–03_SA 3439 OTP-Deuel Harvest Wind Energy FSA (J526) BSSB In & Out to be effective 3/4/2020.
Filed Date: 3/3/20.
Accession Number: 20200303–5226.
Comments Due: 5 p.m. ET 3/24/20.

Docket Numbers: ER20–1156–000.
Applicants: New York Independent System Operator, Inc.
Description: § 205(d) Rate Filing: PPTPP Development Agreement—NYISO, LS Power Grid New York & NYPA to be effective 2/3/2020.
Filed Date: 3/4/20.
Accession Number: 20200304–5080.
Comments Due: 5 p.m. ET 3/25/20.

Docket Numbers: ER20–1157–000.
Applicants: Midcontinent Independent System Operator, Inc.
Description: § 205(d) Rate Filing: 2020–03–04_SA 3024 Broadlands-Ameren Illinois 1st Rev GIA (J468) to be effective 2/19/2020.
Filed Date: 3/4/20.
Accession Number: 20200304–5105.
Comments Due: 5 p.m. ET 3/25/20.

Docket Numbers: ER20–1158–000.
Applicants: Midcontinent Independent System Operator, Inc.
Description: § 205(d) Rate Filing: 2020–03–04_SA 3435 Entergy Mississippi-Wildwood Solar GIA (J908) to be effective 2/19/2020.
Filed Date: 3/4/20.
Accession Number: 20200304–5107.
Comments Due: 5 p.m. ET 3/25/20.

Docket Numbers: ER20–1159–000.
Applicants: PJM Interconnection, L.L.C.
Description: § 205(d) Rate Filing: Original WMPA Service Agreement No. 5602; Queue No. AE1–147 to be effective 2/4/2020.
Filed Date: 3/4/20.
Accession Number: 20200304–5115.
Comments Due: 5 p.m. ET 3/25/20.

Docket Numbers: ER20–1160–000.
Applicants: Duke Energy Indiana, LLC.
Description: § 205(d) Rate Filing: 2020 Annual Reconciliation Filing to be effective 7/1/2019.
Filed Date: 3/4/20.
Accession Number: 20200304–5117.
Comments Due: 5 p.m. ET 3/25/20.

Docket Numbers: ER20–1161–000.
Applicants: Midcontinent Independent System Operator, Inc.
Description: § 205(d) Rate Filing: 2020–03–04_SA 3436 Entergy Mississippi-Ragsdale Solar GIA (J830) to be effective 2/20/2020.
Filed Date: 3/4/20.
Accession Number: 20200304–5126.
Comments Due: 5 p.m. ET 3/25/20.

Docket Numbers: ER20–1162–000.
Applicants: Midcontinent Independent System Operator, Inc.
Description: § 205(d) Rate Filing: 2020–03–04_SA 3437 Entergy Louisiana-Catalyst Old River Hydroelectric GIA (J868) to be effective 2/20/2020.
Filed Date: 3/4/20.
Accession Number: 20200304–5127.
Comments Due: 5 p.m. ET 3/25/20.

Docket Numbers: ER20–1163–000.
Applicants: PJM Interconnection, L.L.C.
Description: § 205(d) Rate Filing: Amendment to First Revised WMPA No. 4869; Queue No. AD2–044/AC2–138 to be effective 2/22/2019.
Filed Date: 3/4/20.
Accession Number: 20200304–5150.
Comments Due: 5 p.m. ET 3/25/20.

Docket Numbers: ER20–1165–000.
Applicants: PJM Interconnection, L.L.C.
Description: § 205(d) Rate Filing: Clean up to Sch. 12-Appx A (JCPL), (APS), (AEP), (Dominion)—2020 Annual Update to be effective 1/29/2020.
Filed Date: 3/4/20.
Accession Number: 20200304–5210.
Comments Due: 5 p.m. ET 3/25/20.

Docket Numbers: ER20–1166–000.
Applicants: Outlaw Wind Project, LLC.
Description: § 205(d) Rate Filing: SFA agreement filing to be effective 5/4/2020.
Filed Date: 3/4/20.
Accession Number: 20200304–5228.
Comments Due: 5 p.m. ET 3/25/20.

The filings are accessible in the Commission's eLibrary system by clicking on the links or querying the docket number.

Any person desiring to intervene or protest in any of the above proceedings must file in accordance with Rules 211 and 214 of the Commission's Regulations (18 CFR 385.211 and 385.214) on or before 5:00 p.m. Eastern time on the specified comment date. Protests may be considered, but intervention is necessary to become a party to the proceeding.

eFiling is encouraged. More detailed information relating to filing requirements, interventions, protests, service, and qualifying facilities filings can be found at: *http://www.ferc.gov/docs-filing/efiling/filing-req.pdf.* For other information, call (866) 208–3676 (toll free). For TTY, call (202) 502–8659.

Dated: March 4, 2020.

Nathaniel J. Davis, Sr.,

Deputy Secretary.

[FR Doc. 2020–04870 Filed 3–9–20; 8:45 am]

BILLING CODE 6717–01–P

DEPARTMENT OF ENERGY

Federal Energy Regulatory Commission

Combined Notice of Filings

Take notice that the Commission has received the following Natural Gas Pipeline Rate and Refund Report filings:

Docket Numbers: RP20–643–000.
Applicants: Transwestern Pipeline Company, LLC.
Description: § 4(d) Rate Filing: Housekeeping Supplement to RP20–595–000 filed on 3–3–20 to be effective 4/1/2020.
Filed Date: 3/3/20.
Accession Number: 20200303–5031.
Comments Due: 5 p.m. ET 3/16/20.

Docket Numbers: RP20–644–000.
Applicants: KPC Pipeline, LLC.
Description: § 4(d) Rate Filing: Scheduling Priority for Interruptible Transportation Service to be effective 4/3/2020.
Filed Date: 3/3/20.
Accession Number: 20200303–5093.
Comments Due: 5 p.m. ET 3/16/20.

Docket Numbers: RP20–645–000.
Applicants: Enable Mississippi River Transmission, LLC.
Description: § 4(d) Rate Filing: Negotiated Rate Filing—Olin Corporation RP18–923 & RP20–131 Settlement to be effective 1/1/2019.
Filed Date: 3/3/20.
Accession Number: 20200303–5210.
Comments Due: 5 p.m. ET 3/16/20.

The filings are accessible in the Commission's eLibrary system by clicking on the links or querying the docket number.

Any person desiring to intervene or protest in any of the above proceedings must file in accordance with Rules 211 and 214 of the Commission's Regulations (18 CFR 385.211 and 385.214) on or before 5:00 p.m. Eastern time on the specified date(s). Protests may be considered, but intervention is necessary to become a party to the proceeding.

eFiling is encouraged. More detailed information relating to filing requirements, interventions, protests, service, and qualifying facilities filings can be found at: *http://www.ferc.gov/docs-filing/efiling/filing-req.pdf.* For other information, call (866) 208–3676 (toll free). For TTY, call (202) 502–8659.

Dated: March 4, 2020.

Nathaniel J. Davis, Sr.,

Deputy Secretary.

[FR Doc. 2020–04871 Filed 3–9–20; 8:45 am]

BILLING CODE 6717–01–P

DEPARTMENT OF ENERGY

Federal Energy Regulatory Commission

[Docket Nos. CP20–55–000, PF19–5–000]

Port Arthur LNG Phase II, LLC; PALNG Common Facilities Company, LLC; Notice of Application

Take notice that on February 19, 2020, Port Arthur LNG Phase II, LLC (Phase II) 2925 Briarpark, Suite 900, Houston, Texas 77042, and PALNG Common Facilities Company, LLC (PCFC, collectively with PALNG Phase II, Applicants), 2925 Briarpark, Suite 900, Houston, Texas 77042, filed an application pursuant to section 3 of the Natural Gas Act and Part 153 of the Commission's regulations, requesting authorization to expand the Port Arthur LNG Liquefaction Terminal authorized under Docket No. CP17–20–000, *Port Arthur LNG, LLC,* 167 FERC ¶ 61,052 (2019), located in Jefferson County, Texas (Expansion Project). The Expansion Project includes two liquefaction trains (Trains 3 and 4), each with its own gas treatment facilities and each capable of producing 6.73 million tons per annum under optimal conditions, along with associated utilities and infrastructure related to Trains 3 and 4.

The filing is available for review at the Commission in the Public Reference Room or may be viewed on the Commission's website web at *http://www.ferc.gov* using the ''eLibrary'' link. Enter the docket number excluding the last three digits in the docket number field to access the document. For assistance, contact FERC at *FERCOnlineSupport@ferc.gov* or call toll-free, (886) 208–3676 or TYY, (202) 502–8659.

Any questions regarding this application should be addressed to Jerrod L. Harrison, 488 8th Avenue, San Diego, CA 92101, by telephone at (619) 696–2987, or by email at *jharrison@sempraglobal.com.*

On June 25, 2019, Commission staff granted Applicants' affiliate and predecessor in interest, PALNG Holdings, request to utilize the Pre-Filing Process and assigned Docket No. PF19–5–000 to staff activities involved in the Expansion Project. Now, as of the filing of this application on February 19, 2020, the Pre-Filing Process for this project has ended. From this time forward, this proceeding will be conducted in CP20–55–000, as noted in the caption of the Notice.

Pursuant to section 157.9 of the Commission's rules, 18 CFR 157.9, within 90 days of this Notice the Commission staff will either: complete its environmental assessment (EA) and place it into the Commission's public record (eLibrary) for this proceeding; or issue a Notice of Schedule for Environmental Review. If a Notice of Schedule for Environmental Review is issued, it will indicate, among other milestones, the anticipated date for the Commission staff's issuance of the EA for this proposal. The filing of the EA in the Commission's public record for this proceeding or the issuance of a Notice of Schedule for Environmental Review will serve to notify federal and state agencies of the timing for the completion of all necessary reviews, and the subsequent need to complete all federal authorizations within 90 days of the date of issuance of the EA.

There are two ways to become involved in the Commission's review of this project. First, any person wishing to obtain legal status by becoming a party to the proceedings for this project should, on or before the comment date stated below file with the Federal Energy Regulatory Commission, 888 First Street NE, Washington, DC 20426, a motion to intervene in accordance with the requirements of the Commission's Rules of Practice and Procedure (18 CFR 385.214 or 385.211) and the Regulations under the NGA (18 CFR 157.10). A person obtaining party status will be placed on the service list maintained by the Secretary of the Commission and will receive copies of all documents filed by the applicant and by all other parties. A party must submit 3 copies of filings made in the proceeding with the Commission and must provide a copy to the applicant and to every other party. Only parties to the proceeding can ask for court review of Commission orders in the proceeding.

However, a person does not have to intervene in order to have comments considered. The second way to participate is by filing with the Secretary of the Commission, as soon as possible, an original and two copies of comments in support of or in opposition to this project. The Commission will consider these comments in determining the appropriate action to be taken, but the filing of a comment alone will not serve to make the filer a party to the proceeding. The Commission's rules require that persons filing comments in opposition to the project provide copies of their protests only to the party or parties directly involved in the protest.

Persons who wish to comment only on the environmental review of this project should submit an original and two copies of their comments to the Secretary of the Commission.

Environmental commenters will be placed on the Commission's environmental mailing list and will be notified of any meetings associated with the Commission's environmental review process. Environmental commenters will not be required to serve copies of filed documents on all other parties. However, the non-party commenters will not receive copies of all documents filed by other parties or issued by the Commission and will not have the right to seek court review of the Commission's final order.

As of the February 27, 2018 date of the Commission's order in Docket No. CP16–4–001, the Commission will apply its revised practice concerning out-of-time motions to intervene in any new Natural Gas Act section 3 or section 7 proceeding.[1] Persons desiring to become a party to a certificate proceeding are to intervene in a timely manner. If seeking to intervene out-of-time, the movant is required to ''show good cause why the time limitation should be waived,'' and should provide justification by reference to factors set forth in Rule 214(d)(1) of the Commission's Rules and Regulations.[2]

The Commission strongly encourages electronic filings of comments, protests and interventions in lieu of paper using the ''eFiling'' link at *http://www.ferc.gov.* Persons unable to file electronically should submit an original and 3 copies of the protest or intervention to the Federal Energy regulatory Commission, 888 First Street NE, Washington, DC 20426.

Comment Date: 5:00 p.m. Eastern Standard Time on March 25, 2020.

Dated: March 4, 2020.

Nathaniel J. Davis, Sr.,

Deputy Secretary.

[FR Doc. 2020–04872 Filed 3–9–20; 8:45 am]

BILLING CODE 6717–01–P

[1] *Tennessee Gas Pipeline Company, L.L.C.,* 162 FERC ¶ 61,167 at ¶ 50 (2018).

[2] 18 CFR 385.214(d)(1).

DEPARTMENT OF ENERGY

Federal Energy Regulatory Commission

[Project No. 2088–068]

South Feather Water and Power Agency; Notice of Request for Waiver Determination

Take notice that on December 12, 2019, South Feather Water and Power Agency, applicant for relicensing the South Feather Power Project No. 2088, filed a letter requesting the Commission find that the California State Water Resources Control Board waived its authority to issue a certification for the South Feather Power Project under Section 401 of the Clean Water Act, 33 U.S.C. 1341(a)(1), as more fully explained in the filing.

Any person wishing to comment on South Feather Water Agency's request may do so.[1] The deadline for filing comments is 30 days from the issuance of this notice. The Commission encourages electronic submission of comments in lieu of paper using the ''eFiling'' link at *http://www.ferc.gov.* Persons unable to file electronically should send comments to the following address: Federal Energy Regulatory Commission, 888 First Street NE, Washington, DC 20426. Be sure to reference the project docket number (P–2088–068) with your submission.

This filing is accessible on-line at *http://www.ferc.gov,* using the ''eLibrary'' link and is available for review in the Commission's Public Reference Room in Washington, DC. There is an ''eSubscription'' link on the website that enables subscribers to receive email notification when a document is added to a subscribed docket(s). For assistance with any FERC Online service, please email *FERCOnlineSupport@ferc.gov,* or call (866) 208–3676 (toll free). For TTY, call (202) 502–8659.

Comment Date: 5:00 p.m. Eastern Time on April 3, 2020.

Dated: March 4, 2020.

Nathaniel J. Davis, Sr.,

Deputy Secretary.

[FR Doc. 2020–04878 Filed 3–9–20; 8:45 am]

BILLING CODE 6717–01–P

[1] South Feather Water and Power Agency's request is part of its relicensing proceeding in Project No. 2088–068. Thus, any person that intervened in the relicensing proceeding is already a party. The filing of the request does not trigger a new opportunity to intervene.

ENVIRONMENTAL PROTECTION AGENCY

[EPA–HQ–OPPT–2020–0077; FRL–10005–73]

Certain New Chemicals; Receipt and Status Information for January 2020

AGENCY: Environmental Protection Agency (EPA).

ACTION: Notice.

SUMMARY: EPA is required under the Toxic Substances Control Act (TSCA) to make information publicly available and to publish information in the **Federal Register** pertaining to submissions under TSCA, including notice of receipt of a Premanufacture notice (PMN), Significant New Use Notice (SNUN) or Microbial Commercial Activity Notice (MCAN), including an amended notice or test information; an exemption application (Biotech exemption); an application for a test marketing exemption (TME), both pending and/or concluded; a notice of commencement (NOC) of manufacture (including import) for new chemical substances; and a periodic status report on new chemical substances that are currently under EPA review or have recently concluded review. This document covers the period from 01/01/2020 to 01/31/2020.

DATES: Comments identified by the specific case number provided in this document must be received on or before April 9, 2020.

ADDRESSES: Submit your comments, identified by docket identification (ID) number EPA–HQ–OPPT–2020–0077, and the specific case number for the chemical substance related to your comment, by one of the following methods:

- *Federal eRulemaking Portal: http://www.regulations.gov.* Follow the online instructions for submitting comments. Do not submit electronically any information you consider to be Confidential Business Information (CBI) or other information whose disclosure is restricted by statute.
- *Mail:* Document Control Office (7407M), Office of Pollution Prevention and Toxics (OPPT), Environmental Protection Agency, 1200 Pennsylvania Ave. NW, Washington, DC 20460–0001.
- *Hand Delivery:* To make special arrangements for hand delivery or delivery of boxed information, please follow the instructions at *http://www.epa.gov/dockets/contacts.html.*

Additional instructions on commenting or visiting the docket, along with more information about dockets generally, is available at *http://www.epa.gov/dockets.*

FOR FURTHER INFORMATION CONTACT: *For technical information contact:* Jim Rahai, Information Management Division (7407M), Office of Pollution Prevention and Toxics, Environmental Protection Agency, 1200 Pennsylvania Ave. NW, Washington, DC 20460–0001; telephone number: (202) 564–8593; email address: *rahai.jim@epa.gov.*

For general information contact: The TSCA-Hotline, ABVI-Goodwill, 422 South Clinton Ave., Rochester, NY 14620; telephone number: (202) 554–1404; email address: *TSCA-Hotline@epa.gov.*

SUPPLEMENTARY INFORMATION:

I. Executive Summary

A. What action is the Agency taking?

This document provides the receipt and status reports for the period from 01/01/2020 to 01/31/2020. The Agency is providing notice of receipt of PMNs, SNUNs and MCANs (including amended notices and test information); an exemption application under 40 CFR part 725 (Biotech exemption); TMEs, both pending and/or concluded; NOCs to manufacture a new chemical substance; and a periodic status report on new chemical substances that are currently under EPA review or have recently concluded review.

EPA is also providing information on its website about cases reviewed under the amended TSCA, including the section 5 PMN/SNUN/MCAN and exemption notices received, the date of receipt, the final EPA determination on the notice, and the effective date of EPA's determination for PMN/SNUN/MCAN notices on its website at: *https://www.epa.gov/reviewing-new-chemicals-under-toxic-substances-control-act-tsca/status-pre-manufacture-notices*. This information is updated on a weekly basis.

B. What is the Agency's authority for taking this action?

Under the TSCA, 15 U.S.C. 2601 *et seq.,* a chemical substance may be either an ''existing'' chemical substance or a ''new'' chemical substance. Any chemical substance that is not on EPA's TSCA Inventory of Chemical Substances (TSCA Inventory) is classified as a ''new chemical substance,'' while a chemical substance that is listed on the TSCA Inventory is classified as an ''existing chemical substance.'' (See TSCA section 3(11).) For more information about the TSCA Inventory go to: *https://www.epa.gov/tsca-inventory*.

Any person who intends to manufacture (including import) a new chemical substance for a non-exempt commercial purpose, or to manufacture or process a chemical substance in a non-exempt manner for a use that EPA has determined is a significant new use, is required by TSCA section 5 to provide EPA with a PMN, MCAN or SNUN, as appropriate, before initiating the activity. EPA will review the notice, make a risk determination on the chemical substance or significant new use, and take appropriate action as described in TSCA section 5(a)(3).

TSCA section 5(h)(1) authorizes EPA to allow persons, upon application and under appropriate restrictions, to manufacture or process a new chemical substance, or a chemical substance subject to a significant new use rule (SNUR) issued under TSCA section 5(a)(2), for ''test marketing'' purposes, upon a showing that the manufacture, processing, distribution in commerce, use, and disposal of the chemical will not present an unreasonable risk of injury to health or the environment. This is referred to as a test marketing exemption, or TME. For more information about the requirements applicable to a new chemical go to: *http://www.epa.gov/oppt/newchems*.

Under TSCA sections 5 and 8 and EPA regulations, EPA is required to publish in the **Federal Register** certain information, including notice of receipt of a PMN/SNUN/MCAN (including amended notices and test information); an exemption application under 40 CFR part 725 (biotech exemption); an application for a TME, both pending and concluded; NOCs to manufacture a new chemical substance; and a periodic status report on the new chemical substances that are currently under EPA review or have recently concluded review.

C. Does this action apply to me?

This action provides information that is directed to the public in general.

D. Does this action have any incremental economic impacts or paperwork burdens?

No.

E. What should I consider as I prepare my comments for EPA?

1. *Submitting confidential business information (CBI).* Do not submit this information to EPA through *regulations.gov* or email. Clearly mark the part or all of the information that you claim to be CBI. For CBI information in a disk or CD–ROM that you mail to EPA, mark the outside of the disk or CD–ROM as CBI and then identify electronically within the disk or CD–ROM the specific information that is claimed as CBI. In addition to one complete version of the comment that includes information claimed as CBI, a copy of the comment that does not contain the information claimed as CBI must be submitted for inclusion in the public docket. Information so marked will not be disclosed except in accordance with procedures set forth in 40 CFR part 2.

2. *Tips for preparing your comments.* When preparing and submitting your comments, see the commenting tips at *http://www.epa.gov/dockets/comments.html*.

II. Status Reports

In the past, EPA has published individual notices reflecting the status of TSCA section 5 filings received, pending or concluded. In 1995, the Agency modified its approach and streamlined the information published in the **Federal Register** after providing notice of such changes to the public and an opportunity to comment (See the **Federal Register** of May 12, 1995, (60 FR 25798) (FRL–4942–7). Since the passage of the Lautenberg amendments to TSCA in 2016, public interest in information on the status of section 5 cases under EPA review and, in particular, the final determination of such cases, has increased. In an effort to be responsive to the regulated community, the users of this information, and the general public, to comply with the requirements of TSCA, to conserve EPA resources and to streamline the process and make it more timely, EPA is providing information on its website about cases reviewed under the amended TSCA, including the section 5 PMN/SNUN/MCAN and exemption notices received, the date of receipt, the final EPA determination on the notice, and the effective date of EPA's determination for PMN/SNUN/MCAN notices on its website at: *https://www.epa.gov/reviewing-new-chemicals-under-toxic-substances-control-act-tsca/status-pre-manufacture-notices*. This information is updated on a weekly basis.

III. Receipt Reports

For the PMN/SNUN/MCANs that have passed an initial screening by EPA during this period, Table I provides the following information (to the extent that such information is not subject to a CBI claim) on the notices screened by EPA during this period: The EPA case number assigned to the notice that indicates whether the submission is an initial submission, or an amendment, a notation of which version was received, the date the notice was received by EPA, the submitting manufacturer (*i.e.,* domestic producer or importer), the potential uses identified by the manufacturer in the notice, and the chemical substance identity.

As used in each of the tables in this unit, (S) indicates that the information in the table is the specific information provided by the submitter, and (G) indicates that this information in the table is generic information because the specific information provided by the submitter was claimed as CBI. Submissions which are initial submissions will not have a letter following the case number. Submissions which are amendments to previous submissions will have a case number followed by the letter ''A'' (*e.g.* P–18–1234A). The version column designates

submissions in sequence as ''1'', ''2'', ''3'', etc. Note that in some cases, an initial submission is not numbered as version 1; this is because earlier versions were rejected as incomplete or invalid submissions. Note also that future versions of the following tables may adjust slightly as the Agency works to automate population of the data in the tables.

TABLE I—PMN/SNUN/MCANS APPROVED * FROM 01/01/2020 TO 01/31/2020

Case No.	Version	Received date	Manufacturer	Use	Chemical substance.
J–19–0026A	4	01/14/2020	CBI	(G) Production of biofuel.	(G) Biofuel-producing modified microorganism(s), with chromosomally-borne modifications.
J–19–0027A	4	01/14/2020	CBI	(G) Production of biofuel.	(G) Biofuel-producing modified microorganism(s), with chromosomally-borne modifications.
P–16–0425A	4	01/31/2020	CBI	(G) a chemical reactant used in manufacturing a polymer.	(G) amino-silane.
P–17–0117A	4	01/29/2020	CBI	(G) Use as a polyol for polyurethane manufacture. Reaction of the new substance with a diisocyanate or polyisocyanate in a blend with other polyols will produce a higher MW polymer. (S) Used as a feedstock for hydrogenation to produce a saturated diol for use in urethane chemistry or as an additive in coatings, adhesives or sealants.	(S) 1,6,10-Dodecatriene, 7,11-dimethyl-3-methylene-, (6E)-, homopolymer, 2-hydroxypropyl-terminated.
P–17–0118A	4	01/29/2020	CBI	(G) Use as a polyol for polyurethane manufacture. Reaction of the new substance with a diisocyanate or polyisocyanate and other polyols will produce a higher MW polymer. (S) Used as a feedstock for hydrogenation to produce a saturated diol for use in urethane chemistry or as an additive in coatings, adhesives or sealants.	(S) 1,6,10-Dodecatriene, 7,11-dimethyl-3-methylene-, (6E)-, homopolymer, 2-hydroxyethyl-terminated.
P–17–0230A	4	01/21/2020	CBI	(G) Additive, open, non-dispersive use.	(G) Oxirane, 2-alkyl-, polymer with oxirane, mono[N-[3-(carboxyamino)-4(or 6)-alkylphenyl]carbamate], alkyl ether, ester with 2,2′,2″-nitrilotris-[alkanol].
P–17–0235A	6	12/19/2019	CBI	(G) Anti-agglomerate	(G) Amidoamino quaternary ammonium salt.
P–17–0333A	6	01/16/2020	Miwon North America, Inc.	(S) Reactive diluent for optical film coating.	(G) 2-Propenoic acid, mixed esters with heterocyclic dimethanol and heterocyclic methanol.
P–17–0395A	6	01/24/2020	CBI	(G) Water treatment additive.	(G) Alkyl tri dithiocarbmate tri salt.
P–18–0007A	3	12/20/2019	Nexoleum USA Corp.	(S) Used as a plasticizer/stabilizer for flexible PVC.	(S) Glycerides, soya mono- and di-, epoxidized, acetates.
P–18–0007A	4	12/27/2019	Nexoleum USA Corp.	(S) Used as a plasticizer/stabilizer for flexible PVC.	(S) Glycerides, soya mono- and di-, epoxidized, acetates.
P–18–0008A	3	12/20/2019	Nexoleum USA Corp.	(S) Used as a plasticizer/stabilizer for flexible PVC.	(S) Glycerides, C16–18 and C18-unsatd. mono- and di-, epoxidized, acetates.
P–18–0008A	4	12/27/2019	Nexoleum USA Corp.	(S) Used as a plasticizer/stabilizer for flexible PVC.	(S) Glycerides, C16–18 and C18-unsatd. mono- and di-, epoxidized, acetates.
P–18–0012A	6	12/19/2019	CBI	(G) Adhesives	(G) Polyester polyol.
P–18–0031A	7	01/09/2020	CBI	(G) Ingredient for industrial coating.	(G) Substituted dicarboxylic acid, polymer with various alkanediols.

TABLE I—PMN/SNUN/MCANS APPROVED * FROM 01/01/2020 TO 01/31/2020—Continued

Case No.	Version	Received date	Manufacturer	Use	Chemical substance.
P–18–0058A	3	01/29/2020	CBI	(S) Component of electroconductive low-noise grease for long-term lubrication of capped or sealed ball bearings.	(S) Phosphonium, trihexyltetradecyl-, salt with 1,1,1-trifluoro-N-[(trifluoromethyl)sulfonyl]methanesulfonamide (1:1).
P–18–0063A	3	01/16/2020	Ethox Chemicals, LLC.	(G) This material is used as a lubricant additive for applications such as stamping, forming, cutting, drilling, or otherwise working metals.	(G) alcohol alkoxylate phosphate.
P–18–0067A	4	01/12/2020	CBI	(G) Adjuvant agent	(S) Fatty acids, C14–18 and C16–18-unsatd., polymers with adipic acid and triethanolamine, di-Me sulfate-quaternized.
P–18–0070A	10	12/20/2019	Arrowstar, LLC	(G) Chemical intermediate for polyurethane industry.	(G) Waste plastics, polyester, depolymd. with glycols, polymers with dicarboxylic acids.
P–18–0093A	4	12/19/2019	CBI	(G) Additive to plastics.	(G) Pentacyclo[9.5.1.13,9.15,15.17,13]octasiloxane, 1,3,5,7,9,11,13,15-octakis (polyfluoroalkyl)-.
P–18–0094A	4	12/19/2019	CBI	(G) Additive to plastics.	(G) Pentacyclo[9.5.1.13,9.15,15.17,13]octasiloxanealkylsubstituted, 3,5,7,9,11,13,15-heptakis(polyfluoroalkyl)-.
P–18–0095A	4	12/19/2019	CBI	(G) Additive to plastics.	(G) Pentacyclo[9.5.1.13,9.15,15.17,13]octasiloxanealkanol, 3,5,7,9,11,13,15-heptakis(polyfluoroalkyl)-, acetate.
P–18–0104A	7	01/28/2020	CBI	(S) Halogen free flame retardant in thermoplastic polymers.	(G) Acrylic acid, reaction products with pentaerythritol, polymerized.
P–18–0108A	2	01/20/2020	CBI	(G) Ionic salt of a polyamic acid for coatings, open, non-dispersive use.	(G) Aromatic anhydride polymer with bisalkylbiphenylbisamine compound with alkylaminoalkyl acrylate ester.
P–18–0151A	7	12/17/2019	Struers, Inc	(S) A curing agent for curing epoxy systems.	(S) Formaldehyde, reaction products with 1,3-benzenedimethanamine and p-tert-butylphenol.
P–18–0151A	8	01/28/2020	Struers, Inc.	(S) A curing agent for curing epoxy systems.	(S) Formaldehyde, reaction products with 1,3-benzenedimethanamine and p-tert-butylphenol.
P–18–0173A	3	01/13/2020	CBI	(S) Thickener for paint and coatings.	(G) Poly (oxy1,2-alkydiyl) hydroxy polymer with cyanoato butylalcohol.
P–18–0187A	4	01/09/2020	CBI	(G) Emulsifier	(G) Carboxylic acid-polyamine condensate.
P–18–0226A	6	12/19/2019	CBI	(G) Anti-agglomerate	(G) Tri alkyl, mono alkoxy, fatty acid ester, ammonium salt.
P–18–0307A	3	01/16/2020	CBI	(G) Binder resin in coatings.	(G) Alkyl Alkenoic acid, alkyl ester, telomer with alkyl alkenoate, substituted alkyl alkyl alkenoate, alkylthiol, substituted carbomonocycle, hydroxyalkyl alkyl alkenoate and alkyl alkyl alkenoate.
P–18–0328A	2	01/06/2020	CBI	(G) Chemical intermediate for the manufacture of plasticizer.	(G) Plant oil fatty acids, alkyl esters.
P–18–0329A	2	12/19/2019	CBI	(G) Component of lenses used in electronic applications.	(G) Substituted carbopolycyclic dicarboxylic acid dialkyl ester, polymer with alkanediol and carbopolycyclic bis (substituted carbopolycycle) bisalkanol.
P–19–0002A	5	12/17/2019	CBI	(S) Chemical Intermediate.	(G) Polyaromatic symmetrical tetracarboxylic acid.
P–19–0003A	4	12/17/2019	CBI	(S) Chemical Intermediate.	(G) Polyaromatic ether symmetrical dicarboxylic anhydride.
P–19–0004A	4	12/17/2019	CBI	(G) molded parts and components.	(G) Aromatic dianhydride, polymer with aromatic diamine and heteroatom bridged aromatic diamine, reaction products with aromatic anhydride.
P–19–0048A	4	12/18/2019	CBI	(G) Coating additive	(S) Poly(oxy-1,2-ethanediyl), .alpha.-hydro-.omega.-hydroxy-, mono-C12–14-alkyl ethers, phosphates, sodium salts.
P–19–0048A	5	12/19/2019	CBI	(G) Coating additive	(S) Poly(oxy-1,2-ethanediyl), .alpha.-hydro-.omega.-hydroxy-, mono-C12–14-alkyl ethers, phosphates, sodium salts.

TABLE I—PMN/SNUN/MCANS APPROVED * FROM 01/01/2020 TO 01/31/2020—Continued

Case No.	Version	Received date	Manufacturer	Use	Chemical substance.
P–19–0053A	6	12/20/2019	Wacker Chemical Corporation.	(S) Used as a surface treatment, sealant, caulk, and coating for mineral building materials such as concrete, brick, limestone, and plaster, as well as on wood, metal and other substrates. Formulations containing the cross-linker provide release and anti-graffiti properties, water repellency, weather proofing, and improved bonding in adhesive/sealant applications. The new substance is a moisture curing cross-linking agent which binds/joins polymers together when cured. Ethanol is released during cure, and once the cure reaction is complete, the product will remain bound in the cured polymer matrix.	(S) 1-Butanamine, N-butyl-N-[(triethoxysilyl)methyl]-.
P–19–0095A	6	01/23/2020	CBI	(G) Consumer Disposables, (G) Polymer Sheet, (G) Durable Goods.	(G) Poly hydroxy alkanoate.
P–19–0103A	5	01/06/2020	CBI	(G) Well performance monitor.	(G) Halogenated benzoic acid, ethyl ester.
P–19–0109A	5	01/09/2020	Arch Chemicals, Inc.	(S) Chemical is used as a component of a cleaning formulation to improve the wettability of the overall cleaning solution on the substrate.	(S) Copper, [[2,2′,2″-(nitrilo-.kappa.N)tris[ethanolato-.kappa.O]](2-)]-; (S) Copper, bis[2-(amino-.kappa.N)ethanolato-.kappa.O]-;.
P–19–0109A	6	01/14/2020	Arch Chemicals, Inc.	(S) Chemical is used as a component of a cleaning formulation to improve the wettability of the overall cleaning solution on the substrate.	(S) Copper, [[2,2′,2″-(nitrilo-.kappa.N)tris[ethanol-.kappa.O]](2-)]-; (S) Copper, bis[2-(amino-.kappa.N)ethanolato-.kappa.O]-;.
P–19–0109A	7	01/23/2020	Arch Chemicals, Inc.	(S) Chemical is used as a component of a cleaning formulation to improve the wettability of the overall cleaning solution on the substrate.	(S) Copper, [[2,2′,2″-(nitrilo-.kappa.N)tris[ethanolato-.kappa.O]](2-)]-;(S) Copper, bis[2-(amino-.kappa.N)ethanolato-.kappa.O]-;.
P–19–0143A	5	12/23/2019	Aditya Birla Chemicals (USA), LLC.	(S) A crosslinking agent for use in epoxy resin for water-based coating for a variety of substrates and civil applications in commercial and consumer usages.	(G) Aldehyde, polymer with mixed alkanepolyamines, 2,2′-[1,4-alkanediylbis(oxyalkylene)] bis[oxirane], 2-(alkoxyalkyloxirane, 4,4′-(1-alkylidene)bis[phenol], 2,2′-[(1-alkylidene)bis(4,1-alkyleneoxyalkylene)]bis[oxirane] and 2-(aryloxyalkyl)oxirane, acetate (salt).

TABLE I—PMN/SNUN/MCANS APPROVED * FROM 01/01/2020 TO 01/31/2020—Continued

Case No.	Version	Received date	Manufacturer	Use	Chemical substance.
P–19–0144A	5	12/23/2019	Aditya Birla Chemicals (USA), LLC.	(S) A crosslinking agent in epoxy based self-leveling floor coatings.	(G) Alkanedioic Acid, compds. With substituted arylalkylamine-arylalcohol disubstituted alkane-the diglycidyl ether of a arylalcohol disubstituted alkane -epichlorohydrin-aldehyde-2,2′-[(1-alkylidene)bis[4,1-aryleneoxy(alkyl-2,1-alkanediyl)oxyalkylene]]bis[oxirane]-alkanepolyamine polymer-1-[[2-[(2-aminoalkyl)amino]alkyl]amino]-3-aryloxy-2-alcohol reaction products.
P–19–0155A	5	12/17/2019	Huntsman International, LLC.	(S) Adjuvant for agrochemical formulations.	(S) Amides, from C8–18 and C18-unsatd. glycerides and diethylenetriamine, ethoxylated.
P–19–0156A	5	12/17/2019	Huntsman International, LLC.	(S) Adjuvant for agrochemical formulations.	(S) Amides, from diethylenetriamine and palm kernel-oil, ethoxylated.
P–19–0157A	5	12/17/2019	Huntsman International, LLC.	(S) Adjuvant in agrochemical formulations.	(S) Amides, from coconut oil and diethylenetriamine, ethoxylated.
P–19–0158A	6	01/06/2020	Ashland, Inc.	(G) Adhesive	(G) Alkenoic acid polymer with 2-ethyl-2-(hdroxymethyl)-1,3-alkyldiol, 1,1′-methylenebis(4-isocyantocarbomonocycle) and 3-methyl-1,5-aklydiol.
P–19–0164A	2	01/03/2020	Allnex USA, Inc.	(S) Site limited intermediate for coating resin manufacture.	(G) Bis-alkoxy substituted alkane, polymer with aminoalkanol.
P–19–0166A	2	01/30/2020	Fujifilm Electronic Materials USA, Inc.	(G) Photoacid generator (PAG).	(G) Triarylsulfonium alkylestersulfonate,.
P–19–0168A	5	12/19/2019	CBI	(G) Well performance tracer.	(G) Halogenated alkylbenzoic acid.
P–19–0169A	5	12/19/2019	CBI	(G) Well performance monitor.	(G) Halogenated alkylbenzoic acid.
P–20–0010A	3	01/07/2020	CBI	(G) Polymerization auxiliary.	(G) Carboxylic acid, reaction products with metal hydroxide, inorganic dioxide and metal.
P–20–0015	4	01/13/2020	GE Healthcare	(S) The polymer is used in the manufacture of hollow fiber products.	(G) Zwitterionic polysulfone polymer;(G) N-alkyl heteromonocyclic diphenolamide, polymer with Bisphenol A, haloaryl-substituted sulfone, compd. with cyclic sulfonate ester, polyaryl alcohol terminated.
P–20–0025A	2	12/17/2019	Biosynthetic Technologies.	(S) Motor oil lubricant, formulation #1 (prepared at a processor which is controlled by others),(S) Motor oil lubricant, formulation #2 (prepared at a processor which is controlled by others).	(S) Octadecanoic acid, 12-(acetoxy)-, 2-ethylhexyl ester.
P–20–0025A	3	01/07/2020	Biosynthetic Technologies.	(S) Motor oil lubricant, formulation #1 (prepared at a processor which is controlled by others),(S) Motor oil lubricant, formulation #2 (prepared at a processor which is controlled by others).	(S) Octadecanoic acid, 12-(acetoxy)-, 2-ethylhexyl ester.
P–20–0026A	3	01/13/2020	GE Healthcare	(S) The new monomer is isolated and used for subsequent polymerization.	(G) N-alkyl heteromonocyclic diphenolamide.
P–20–0027	5	01/10/2020	H.B. Fuller Company.	(S) Industrial Adhesives.	(G) Glycols, alpha, omega-, c2–6, polymers with adipic acid, dodecanedioic acid, hydracrylic acid polyester, isophthalic acid, 1,1′-methylenebis[4-isocyanatobenzene], neopentyl glycol and terephthalic acid.
P–20–0028	5	01/10/2020	H.B. Fuller Company.	(S) Industrial Adhesives.	(G) glycols, alpha, omega-, c2–6, polymers with adipic acid, aromatic polyester, dodecanedioic acid, hydracrylic acid polyester, isophthalic acid, 1,1′-methylenebis[4-isocyanatobenzene], neopentyl glycol and terephthalic acid.
P–20–0029A	3	01/14/2020	Kuraray America, Inc.	(G) Oil soluble additive.	(S) Octanal, 7(or 8)-formyl-.
P–20–0031	3	01/06/2020	CBI	(G) Intermediate	(G) Perfluorinated substituted 1,3-oxathiolane dioxide.

TABLE I—PMN/SNUN/MCANS APPROVED * FROM 01/01/2020 TO 01/31/2020—Continued

Case No.	Version	Received date	Manufacturer	Use	Chemical substance.
P–20–0032A	2	01/15/2020	Engineered Bonded Structures and Composites.	(S) Talathol PO3, the material for which this notice is filed, is intended to be used as a copolymer in the production of urethane foam or coating. This is intended to replace lauan (also spelled luan) paneling which is used in manufacturing prefabricated buildings.	(G) Polyethylene terephthalate polyol.
P–20–0032A	3	01/24/2020	Engineered Bonded Structures and Composites.	(S) Talathol PO3, the material for which this notice is filed, is intended to be used as a copolymer in the production of urethane foam or coating. This is intended to replace lauan (also spelled luan) paneling which is used in manufacturing prefabricated buildings.	(G) Polyethylene terephthalate polyol.
P–20–0033	2	01/06/2020	CBI	(G) Intermediate	(G) Perfluorinated vinyl haloalkane sulfonate salt.
P–20–0034	2	01/06/2020	CBI	(G) Intermediate	(G) Perfluorinated vinyl haloalkane sulfonyl halide.
P–20–0035A	2	01/21/2020	CBI	(G) Colorant	(G) Substituted aromatic, 3,3′-[[6-[(substituted alkyl amino)]-1,3,5-triazine-2,4-diyl]bis[imino[2-(substituted)-5-[substituted alkoxy]-4,1-phenylene]-2,1- diazenediyl]]bis[substituted, sodium salt].
P–20–0039	2	01/12/2020	Miwon North America, Inc.	(S) Resins for Industrial coating.	(G) Hexanedioic acid, polymer with alkyl(substituted-alkyl)-alkanediol and 1,3-isobenzofurandione, 2-propenoate.
P–20–0040	4	01/06/2020	CBI	(G) Additive for use in inks, coatings, adhesives and sealants.	(G) 2-Propenoic acid, cycloalkyl ester,.
P–20–0041	2	01/07/2020	Kuraray America, Inc.	(G) Chemical Intermediate for Coatings.	(S) 1,3-Benzenedicarboxylic acid, polymer with 3-methyl-1,5-pentanediol.
P–20–0042	2	01/08/2020	CBI	(G) Photoresist use at customer.	(G) Sulfonium, trisaryl-, 7,7-dialkyl-2-heteropolycyclic -1-alkanesulfonate (1:1).
P–20–0042A	3	01/14/2020	CBI	(G) Photoacid generator use at customer.	(G) Sulfonium, trisaryl-, 7,7-dialkyl-2-heteropolycyclic -1-alkanesulfonate (1:1).
P–20–0044	1	01/23/2020	Angus Chemical Company.	(G) curing additive: automotive paint (G) neutralization, stability and pigment dispersancy in industrial latex paints (G) neutralization, solubilization and stability in commercial waterborne and solvent borne coatings and varnishes used for wood, metal, compositites, and other substrates (G) solubilizer for high acid value styrene acrylic polymers for use in ink applications (G) additive for industrial polyurethane dispersions.	(S) 1-Propanamine, 3-methoxy-N,N-dimethyl.

TABLE I—PMN/SNUN/MCANS APPROVED * FROM 01/01/2020 TO 01/31/2020—Continued

Case No.	Version	Received date	Manufacturer	Use	Chemical substance.
P–20–0046	1	01/28/2020	CBI	(G) Catalyst	(G) Reaction products of alkyl-terminated alkylalumuminoxanes and {[(pentaalkylphenyl-(pentaalkylphenyl)amino)alkyl]alkanediaminato}bis(aralkyl) transition metal coordination compound.
P–20–0051	1	01/31/2020	CBI	(S) Curing agent for Industrial epoxy coating systems.	(S) 1,8-Octanediamine, 4-(aminomethyl)-, N-benzyl derivs.
SN–17–0011A	3	01/16/2020	CBI	(G) Foam additive (G) Specialty gas and transfer fluid.	(G) Polyfluorohydrocarbon.

*The term 'Approved' indicates that a submission has passed a quick initial screen ensuring all required information and documents have been provided with the submission prior to the start of the 90-day review period, and in no way reflects the final status of a complete submission review.

In Table II of this unit, EPA provides the following information (to the extent that such information is not claimed as CBI) on the NOCs that have passed an initial screening by EPA during this period: The EPA case number assigned to the NOC including whether the submission was an initial or amended submission, the date the NOC was received by EPA, the date of commencement provided by the submitter in the NOC, a notation of the type of amendment (*e.g.,* amendment to generic name, specific name, technical contact information, etc.) and chemical substance identity.

TABLE II—NOCS APPROVED * FROM 01/01/2020 TO 01/31/2020

Case No.	Received date	Commencement date	If amendment, type of amendment	Chemical substance
J–16–0022	01/27/2020	01/27/2020	N	(G) Modified trichoderma reesei.
P–10–0002	12/16/2019	12/16/2019	N	(S) Soil organic matter, alkaline extract, potassium salt.
P–10–0438	01/07/2020	07/19/2011	N	(G) 2-propenoic acid, homopolymer, ester with .alpha.-methyl-polyether compd. with aminoalcohol.
P–16–0310A	12/18/2019	04/09/2018	Generic chemical name	(G) 12-hydroxystearic acid, reaction products with alkylene diamine and alkanoic acid.
P–16–0314	01/28/2020	01/23/2020	N	(S) Ethanone, 1-(5-propyl-1,3-benzodioxol-2-yl)-.
P–16–0509	01/13/2020	12/17/2019	N	(G) Modified ethylene-vinyl alcohol copolymer.
P–16–0573	01/09/2020	02/07/2018	N	(G) Rosin, tall oil, reaction products with polyalkylene-polysubstituted-terephthalic acid polymer.
P–17–0321	01/09/2020	01/09/2020	N	(S) 1,3,5-naphthalene trisulfonic acid trisodium salt.
P–17–0368	01/06/2020	01/05/2020	N	(G) Vegetable oil, polymer with alkanedioic acid, alkali lignin, diethylene glycol- and polyol-depolymd. poly(ethylene terephthalate) waste plastics.
P–17–0398	01/10/2020	11/07/2019	N	(S) Waste plastics, pyrolyzed, depolymd., c11 to c33 branched,cyclic and linear fraction.a complex combination of hydrocarbons obtained from the fractional condensation of polyolefins and vinyl polymers waste plastics. it consists predominately of c11 to c33 branched, cyclic and linear hydrocarbons and boils in the range of 350 degrees c to 450 degrees c(662 degrees f to 842 degrees f).
P–17–0399	01/10/2020	11/07/2019	N	(S) Waste plastics, pyrolyzed, depolymd., c7 to c26-branched, cyclic and linear fraction. a complex combination of hydrocarbons obtained from the fractional condensation of polyolefins and vinyl polymers waste plastics. it consists of predominately c7 to c26 branched, cyclic and linear hydrocarbons and boils in the range of 0 degrees c to 350 degrees c (32 degrees f to 662 degrees f).
P–17–0405	12/31/2019	12/31/2019	N	(S) Benzoic acid, 2,3,5-trifluoro-, ethyl ester.
P–17–0406	12/31/2019	12/31/2019	N	(S) Benzoic acid, 2,3,6-trifluoro-, ethyl ester.
P–17–0407	12/31/2019	12/31/2019	N	(S) Benzoic acid, 2,4,6-trifluoro-, ethyl ester.
P–17–0408	12/31/2019	12/31/2019	N	(S) Benzoic acid, 2,3,5-trichloro-,ethyl ester.
P–17–0409	12/31/2019	12/31/2019	N	(S) Benzoic acid, 2,3,6-trichloro-,ethyl ester.
P–17–0410	12/31/2019	12/31/2019	N	(S) Benzoic acid, 2,4,6-trichloro-,ethyl ester.
P–17–0411	12/31/2019	12/31/2019	N	(S) Benzoic acid, 2,3,4-trichloro-,ethyl ester.
P–17–0412	12/31/2019	12/31/2019	N	(S) Benzoic acid, 2,4,5-trichloro-,ethyl ester.
P–17–0414	12/31/2019	12/31/2019	N	(S) Benzoic acid, 2,4,6-trilfuoro.
P–17–0415	12/31/2019	12/31/2019	N	(S) Benzoic acid, 2,4,6-trifluoro-.
P–17–0416	12/31/2019	12/31/2019	N	(S) Benzoic acid, 2,3,6-trifluoro-.
P–17–0417	12/31/2019	12/31/2019	N	(S) Benzoic acid, 2,3,6-trichloro-.

TABLE II—NOCS APPROVED * FROM 01/01/2020 TO 01/31/2020—Continued

Case No.	Received date	Commencement date	If amendment, type of amendment	Chemical substance
P–17–0418	12/31/2019	12/31/2019	N	(S) Benzoic acid, 2,4,6-trichloro-.
P–17–0420	12/31/2019	12/31/2019	N	(S) Benzoic acid, 2,3,5-trichloro-.
P–17–0421	12/31/2019	12/31/2019	N	(S) Benzoic acid, 3,4,5-trichloro-.
P–17–0422	12/31/2019	12/31/2019	N	(S) Benzoic acid, 2,4,5-trichloro-.
P–17–0423	12/31/2019	12/31/2019	N	(S) Benzoic acid, 3,4,5-trichloro-, ethyl ester.
P–17–0441A	12/31/2019	12/31/2019	Withdrew CBI claim	(S) Benzoic acid, 2,4,6-trifluoro-, sodium salt (1:1).
P–17–0442	12/31/2019	12/31/2019	N	(S) Benzoic acid, 2,3,5-trifluoro-, sodium salt (1:1).
P–17–0443	12/31/2019	12/31/2019	N	(S) Benzoic acid, 2,3,6-trifluoro-, sodium salt (1:1).
P–17–0444	12/31/2019	12/31/2019	N	(S) Benzoic acid, 2,3,6-trichloro-, sodium salt (1:1).
P–17–0445	12/31/2019	12/31/2019	N	(S) Benzoic acid, 2,3,5-trichloro-, sodium salt (1:1).
P–17–0446	12/31/2019	12/31/2019	N	(S) Benzoic acid, 2,4,6-trichloro-, sodium salt (1:1).
P–17–0447	12/31/2019	12/31/2019	N	(S) Benzoic acid, 2,4,5-trichloro-, sodium salt (1:1).
P–17–0448	12/31/2019	12/31/2019	N	(S) Benzoic acid, 3,4,5-trichloro-, sodium salt (1:1).
P–17–0449	12/31/2019	12/31/2019	N	(S) Benzoic acid, 2,3,4-trichloro-, sodium salt (1:1).
P–17–0450	12/31/2019	12/31/2019	N	(S) 2,5-dichlorobenzoic acid.
P–18–0018	01/06/2020	12/11/2019	N	(G) Fluorinated acrylate, polymer with alkyloxirane homopolymer monoether with alkanediol mono(2-methyl-2-propenoate), tert-bu 2-ethylhexaneperoxoate-initiated.
P–18–0091	01/06/2020	01/05/2020	N	(G) Vegetable oil, polymers with diethylene glycol- and polyol- and polyethylene glycol-depolymd. poly(ethylene terephthalate) waste plastics and arylcarboxylic acid anhydride.
P–18–0101	12/27/2019	12/06/2019	N	(G) Polyol esters.
P–18–0179	01/20/2020	01/13/2020	N	(G) Phenolic resin, alkali, polymer with formaldehyde and phenol, sodium salt.
P–18–0234	01/08/2020	12/09/2019	N	(G) Alkenoic acid, reaction products with bis substituted alkane and ether polyol,.
P–18–0285	01/07/2020	12/27/2019	N	(S) Butanedioic acid, 2-methylene-, polymer with 2-methyl- 2-[(1-oxo-2-propen-1-yl)amino]-1-propanesulfonic acid, sodium zinc salt.
P–18–0392	01/17/2020	01/04/2020	N	(S) 2-oxazolidinone, 3-ethenyl-5-methyl-.
P–18–0401	01/21/2020	12/26/2019	N	(S) Glycerides, c16–18 and ci8-unsatd. mono- and di-, citrates.
P–18–0402	12/20/2019	12/19/2019	N	(G) Phenol, alkanediylbis(iminoalkylene)bis-, bis(polyisoalkylene) derivs.
P–19–0034	01/20/2020	01/07/2020	N	(G) Metal, bis(2,4-pentanedionato-ko2,ko4)-, (t-4)-,.
P–19–0097	12/18/2019	12/18/2019	N	(S) Benzoic acid, 5-fluoro-2-methyl-, ethyl ester.
P–19–0103	01/09/2020	01/01/2020	N	(S) Benzoic acid, 3-chloro-2-fluoro-, ethyl ester.
P–19–0104	12/18/2019	12/18/2019	N	(S) Benzoic acid, 2-chloro-3-methyl-, ethyl ester.
P–19–0108	12/18/2019	12/18/2019	N	(S) Benzoic acid, 2-chloro-4-methyl-, ethyl ester.
P–19–0118	01/10/2020	12/13/2019	N	(G) Substituted polylalkylenepoly, reaction products with alkene polymer.
P–19–0146	12/18/2019	12/03/2019	N	(G) Modified dimethyl sulfoxide.

* The term 'Approved' indicates that a submission has passed a quick initial screen ensuring all required information and documents have been provided with the submission.

In Table III of this unit, EPA provides the following information (to the extent such information is not subject to a CBI claim) on the test information that has been received during this time period: The EPA case number assigned to the test information; the date the test information was received by EPA, the type of test information submitted, and chemical substance identity.

TABLE III—TEST INFORMATION RECEIVED FROM 01/01/2020 TO 01/31/2020

Case No.	Received date	Type of test information	Chemical substance
L–20–0055	01/27/2020	Ames Test	(G) Imidazo[4,5-d]imidazole-2,5(1h,3h)-dione, tetrahydro-substituted alkyl-.

TABLE III—TEST INFORMATION RECEIVED FROM 01/01/2020 TO 01/31/2020—Continued

Case No.	Received date	Type of test information	Chemical substance
P–16–0349	01/20/2020	Inherent Biodegradability (OECD Test Guideline 302B), Acute Invertebrate Toxicity Freshwater Daphnids (OCSPP Test Guideline 850.1010), Fish Acute Toxicity (Rainbow Trout) Study and Fish Acute Toxicity (Sheepshead Minnow) Study (OCSPP Test Guideline 850.1075), Fish Acute Toxicity with Humic Acid Rainbow Trout) (OCSPP Test Guideline 850.1085) and Algae Acute Toxicity Study (OCSPP 850.4500).	(G) Quaternary ammonium salt of polyisobutene succinic acid.
P–16–0462	01/21/2020	Metals Analysis Report	(G) Silane-treated aluminosilicate.
P–17–0195	01/15/2020	Combined Repeated Dose and Reproductive/Developmental Toxicity Test of [claimed CBI] by Oral Administration in Rats (OECD Test Guideline 422).	(G) 1,3-propanediol,2-methylene-, substituted.
P–18–0293	12/18/2019	In vitro Skin Irritation Test with Chemilian L3000 XP using a Human Skin Model (OECD 439) and In vitro Skin Irritation Test with Chemilian H4000 XP using a Human Skin Model (OECD 439).	(S) Propanedioic acid, 2-methylene-, 1,3-dihexyl ester.
P–18–0293	01/22/2020	An Acute Study of Chemilian L3000 XP by Oral Gavage in Rat (Fixed Dose Method).	(S) Propanedioic acid, 2-methylene-, 1,3-dihexyl ester.
P–18–0294	01/24/2020	An Acute Study of Chemilian H4000 XP by Oral Gavage in Rat (Fixed Dose Method).	(S) Propanedioic acid, 2-methylene-, 1,3-dicyclohexyl ester.
P–18–0294	01/15/2020	An Acute Study of Chemilian H4000 XP by Oral Gavage in Rat (Fixed Dose Method).	(S) Propanedioic acid, 2-methylene-, 1,3-dicyclohexyl ester.
P–18–0351	01/16/2020	Drum Emptying Study	(G) Acrylic acid, tricyclo alkyl ester.
P–19–0147	12/20/2019	Algal Study Supplement	(G) Alkoxylated butyl alkyl ester.

If you are interested in information that is not included in these tables, you may contact EPA's technical information contact or general information contact as described under **FOR FURTHER INFORMATION CONTACT** to access additional non-CBI information that may be available.

Authority: 15 U.S.C. 2601 *et seq.*

Dated: March 4, 2020.

Pamela Myrick,

Director, Information Management Division, Office of Pollution Prevention and Toxics.

[FR Doc. 2020–04891 Filed 3–9–20; 8:45 am]

BILLING CODE 6560–50–P

FARM CREDIT ADMINISTRATION

Privacy Act of 1974; System of Records

AGENCY: Farm Credit Administration.

ACTION: Notice of a Modified System of Records.

SUMMARY: Pursuant to the provisions of the Privacy Act of 1974, as amended, notice is hereby given that the Farm Credit Administration (FCA or Agency) is amending an existing system of records, FCA–1—Employee Attendance, Leave, and Payroll Records—FCA. The Employee Attendance, Leave, and Payroll Records—FCA system is used to prepare payroll, meet Government payroll recordkeeping and reporting requirements, prepare reports, and retrieve and supply payroll and leave information as required for Agency needs. The Agency is updating the notice to reflect changes to the system purpose, categories of individuals, include more details, and make administrative updates, as well as non-substantive changes, to conform to the SORN template requirements prescribed in the Office of Management and Budget (OMB) Circular No. A–108.

DATES: You may send written comments on or before April 9, 2020. FCA filed an amended System Report with Congress and the Office of Management and Budget on March 5, 2020. This notice will become applicable without further publication on April 20, 2020 unless modified by a subsequent notice to incorporate comments received from the public.

ADDRESSES: We offer a variety of methods for you to submit your comments. For accuracy and efficiency reasons, commenters are encouraged to submit comments by email or through the FCA's website. As facsimiles (fax) are difficult for us to process and achieve compliance with section 508 of the Rehabilitation Act, we are no longer accepting comments submitted by fax. Regardless of the method you use, please do not submit your comment multiple times via different methods. You may submit comments by any of the following methods:

- *Email:* Send us an email at *reg-comm@fca.gov*.
- *FCA Website: http://www.fca.gov*. Click inside the ''I want to . . .'' field, near the top of the page; select ''comment on a pending regulation'' from the dropdown menu; and click ''Go.'' This takes you to an electronic public comment form.
- *Mail:* David Grahn, Director, Office of Regulatory Policy, Farm Credit Administration, 1501 Farm Credit Drive, McLean, VA 22102–5090.

You may review copies of comments we receive at our office in McLean, Virginia, or from our website at *http://www.fca.gov*. Once you are in the website, click inside the ''I want to . . .'' field, near the top of the page; select ''find comments on a pending regulation'' from the dropdown menu; and click ''Go.'' This will take you to the Comment Letters page, where you can select the SORN for which you would like to read public comments. The comments will be posted as submitted but, for technical reasons, items such as logos and special characters may be omitted. Identifying information that you provide, such as phone numbers and addresses, will be publicly

available. However, we will attempt to remove email addresses to help reduce internet spam.

FOR FURTHER INFORMATION CONTACT: Autumn R. Agans, Privacy Act Officer, Farm Credit Administration, McLean, Virginia 22102–5090, (703) 883–4019, TTY (703) 883–4020.

SUPPLEMENTARY INFORMATION: This publication satisfies the requirement of the Privacy Act of 1974 that agencies publish a system of records notice in the **Federal Register** when there is a revision, change, or addition to the system of records. The substantive changes and modifications to the currently published version of FCA–1—Employee Attendance, Leave, and Payroll Records—FCA include:

1. Identifying the records in the system as unclassified.
2. Updating the system location to reflect the system's current location.
3. Updating the system managers to reflect the system's current owner.
4. Clarifying and expanding the system purpose to maintain files related to scheduling examinations of Farm Credit System (FCS) institutions by FCA employees, individuals who have been extended and accepted formal offers of employment by the Agency, and contractor personnel, and other similar activities consistent with statutory authorities.
5. Expanding and clarifying the categories of records and individuals to ensure they are consistent with the intended purpose.
6. Expanding and clarifying how records may be stored and retrieved.
7. Expanding and clarifying the routine uses for which information in the system may be disclosed.
8. Revising the retention and disposal section to reflect updated guidance from the National Archives and Records Administration.
9. Revising the safeguards section to reflect updated cybersecurity guidance and practices.

Additionally, non-substantive changes have been made to the ''Record Source Categories'' section.

The amended system of records is: FCA–1—Employee Attendance, Leave, and Payroll Records—FCA. As required by 5 U.S.C. 552a(r) of the Privacy Act, as amended, FCA sent notice of this proposed system of records to the Office of Management and Budget, the Committee on Oversight and Government Reform of the House of Representatives, and the Committee on Homeland Security and Governmental Affairs of the Senate. The notice is published in its entirety below.

SYSTEM NAME AND NUMBER:

FCA–1—Employee Attendance, Leave, and Payroll Records—FCA.

SECURITY CLASSIFICATION:

Unclassified.

SYSTEM LOCATION:

Office of Agency Services, Farm Credit Administration, 1501 Farm Credit Drive, McLean, VA 22102–5090.

SYSTEM MANAGER:

Director, Office of Agency Services, Farm Credit Administration, 1501 Farm Credit Drive, McLean, VA 22102–5090.

AUTHORITY FOR MAINTENANCE OF THE SYSTEM:

12 U.S.C. 2243, 2252.

PURPOSES OF THE SYSTEM:

Information in this record system is used to prepare payroll, to meet Government payroll recordkeeping and reporting requirements, prepare reports, and to retrieve and supply payroll and leave information as required for Agency needs. In addition to payroll, reporting, and related record keeping, information in the system may be used to identify and assign specific employees to specific tasks or work-related assignments, or to track activities and payroll costs associated with those tasks or assignments.

CATEGORIES OF INDIVIDUALS COVERED BY THE SYSTEM:

Current and former FCA employees, individuals who have been extended and accepted formal offers of employment by the Agency, and contractor personnel.

CATEGORIES OF RECORDS IN THE SYSTEM:

This system contains paper and electronic files containing payroll-related information for FCA employees, including but not limited to: Employee name, title, department, supervisor, employee number, Social Security number (SSN), rate and amount of pay, hours worked, tax and retirement deductions, leave bank records, including requests and approvals for leave, life insurance and health insurance deductions, savings allotments, savings bond and charity deductions, health savings accounts, other financial deductions, mailing addresses, and home addresses. The National Finance Center provides Agency payroll services.

Additionally, the system includes information used by the Office of Examination to identify and assign FCA examiners and individuals who have been extended and accepted formal offers of employment by the Agency to specific examinations of FCS institutions. Information includes, but is not limited to: Employee name, supervisor, approved leave and related information pertaining to availability for a specific examination, institution to which the employee is assigned as part of the examination team, and general information about the employee's specific area of expertise or specialty. Sensitive information, such as Social Security number, leave types, balances, and similar information is not used for scheduling purposes.

RECORD SOURCE CATEGORIES:

Information in this system of records is obtained from the individual to whom it applies or from information supplied by Agency officials.

ROUTINE USES OF RECORDS MAINTAINED IN THE SYSTEM, INCLUDING CATEGORIES OF USERS AND PURPOSES OF SUCH USES:

See the ''General Statement of Routine Uses'' (64 FR 8175). The information collected in the system will be used in a manner that is compatible with the purposes for which the information has been collected and, in addition to the applicable general routine uses, may be disclosed for the following purposes:

(1) We may disclose information in this system of records to other Government agencies, commercial or credit organizations, or to prospective employers to verify employment.

(2) We may disclose information in this system of records to Federal, State, and local taxing authorities concerning compensation to employees or to contractors; to the Office of Personnel Management, Department of the Treasury, Department of Labor, and other Federal agencies concerning pay, benefits, and retirement of employees; to Federal employees' health benefits carriers concerning health insurance of employees; to financial organizations concerning employee savings account allotments and net pay to checking accounts; to State human resource offices administering unemployment compensation programs; to educational and training organizations concerning employee qualifications and identity for specific courses; and to heirs, executors, and legal representatives of beneficiaries.

(3) We may disclose information in this system of records to the Office of Child Support Enforcement, Administration for Children and Families, Department of Health and Human Services, Federal Parent Locator System (FPLS), and Federal Tax Offset System for use in locating individuals and identifying their income sources, to establish paternity, establish and modify

orders of support, and for enforcement actions.

(4) We may disclose information in this system of records to the Office of Child Support Enforcement for release to the Social Security Administration for verifying Social Security numbers in connection with the operation of the FPLS by the Office of Child Support Enforcement.

(5) We may disclose information in this system of records to the Office of Child Support Enforcement for release to the Department of the Treasury to administer the Earned Income Tax Credit Program (section 32, Internal Revenue Code of 1986) and to verify a claim with respect to employment in a tax return.

Disclosure to consumer reporting agencies:

We may disclose information from this system, under 5 U.S.C. 552a(b)(12), to consumer reporting agencies as defined in the Fair Credit Reporting Act, 15 U.S.C. 1681a(f), or the Federal Claims Collection Act of 1966, as amended, 31 U.S.C. 3701(a)(3), in accordance with 31 U.S.C. 3711(f).

POLICIES AND PRACTICES FOR STORAGE OF RECORDS:

Records are maintained in a computerized database.

POLICIES AND PRACTICES FOR RETRIEVAL OF RECORDS:

Records are retrieved by name, Social Security number, or some combination thereof.

POLICIES AND PROCEDURES FOR RETENTION AND DISPOSAL OF RECORDS:

Records are retained in accordance with the National Archives and Records Administration's General Records Schedule 2.4: Employee Compensation and Benefits Records and General Records Schedule 2.2: Employee Management Records, and with the FCA Comprehensive Records Schedule.

ADMINSITRATIVE, TECHNICAL, AND PHYSICAL SAFEGUARDS:

FCA implements multiple layers of security to ensure access to records is limited to those with need-to-know in support of their official duties. Records are physically safeguarded in a secured environment using locked file rooms, file cabinets, or locked offices and other physical safeguards. Computerized records are safeguarded through use of user roles, passwords, firewalls, encryption, and other information technology security measures.

RECORD ACCESS PROCEDURES:

To obtain a record, contact: Privacy Act Officer, Farm Credit Administration, 1501 Farm Credit Drive, McLean, VA 22102–5090, as provided in 12 CFR part 603.

CONTESTING RECORD PROCEDURES:

Direct requests for amendments to a record to: Privacy Act Officer, Farm Credit Administration, 1501 Farm Credit Drive, McLean, VA 22102–5090, as provided in 12 CFR part 603.

NOTIFICATION PROCEDURE:

Address inquiries about this system of records to: Privacy Act Officer, Farm Credit Administration, McLean, VA 22102–5090.

EXEMPTIONS PROMULGATED FOR THE SYSTEM:

None.

HISTORY:

Federal Register Vol. 64, No. 100/ Tuesday, May 25, 1999 page 21875.

Vol. 70, No. 183/Thursday, September 22, 2005, page 55621.

Dated: March 5, 2020.

Dale Aultman,

Secretary, Farm Credit Administration Board.

[FR Doc. 2020–04884 Filed 3–9–20; 8:45 am]

BILLING CODE 6705–01–P

FEDERAL RESERVE SYSTEM

Change in Bank Control Notices; Acquisitions of Shares of a Bank or Bank Holding Company

The notificants listed below have applied under the Change in Bank Control Act (Act) (12 U.S.C. 1817(j)) and § 225.41 of the Board's Regulation Y (12 CFR 225.41) to acquire shares of a bank or bank holding company. The factors that are considered in acting on the applications are set forth in paragraph 7 of the Act (12 U.S.C. 1817(j)(7)).

The applications listed below, as well as other related filings required by the Board, if any, are available for immediate inspection at the Federal Reserve Bank indicated. The applications will also be available for inspection at the offices of the Board of Governors. Interested persons may express their views in writing on the standards enumerated in paragraph 7 of the Act.

Comments regarding each of these applications must be received at the Reserve Bank indicated or the offices of the Board of Governors, Ann E. Misback, Secretary of the Board, 20th and Constitution Avenue NW, Washington DC 20551–0001, not later than March 25, 2020.

A. Federal Reserve Bank of Kansas City (Dennis Denney, Assistant Vice President) 1 Memorial Drive, Kansas City, Missouri 64198–0001:

1. *Aubrey Reed Cavett Deupree, Atlanta, Georgia, and William Williams Deupree III, Germantown, Tennessee, individually and together as members of a group acting in concert;* to retain voting shares of Commercial Holding Company and thereby indirectly retain voting shares of Commercial Bank and Trust Company, both of Paris, Tennessee.

Board of Governors of the Federal Reserve System, March 5, 2020.

Yao-Chin Chao,

Assistant Secretary of the Board.

[FR Doc. 2020–04857 Filed 3–9–20; 8:45 am]

BILLING CODE 6210–01–P

DEPARTMENT OF HEALTH AND HUMAN SERVICES

Administration for Children and Families

Submission for OMB Review; Survey of Youth Transitioning From Foster Care (New Collection)

AGENCY: Office of Planning, Research, and Evaluation, Administration for Children and Families, HHS.

ACTION: Request for public comment.

SUMMARY: The Administration for Children and Families (ACF) within the U.S. Department of Health and Human Services (HHS) is proposing to collect data on human trafficking and other victimization experiences among youth recently or currently involved in the child welfare system. The goal of the one-time survey is to better understand trafficking experiences; to identify modifiable risk and protective factors associated with trafficking victimization; and to inform child welfare policy, programs, and practice.

DATES: *Comments due within 30 days of publication.* OMB is required to make a decision concerning the collection of information between 30 and 60 days after publication of this document in the **Federal Register**. Therefore, a comment is best assured of having its full effect if OMB receives it within 30 days of publication.

ADDRESSES: Written comments and recommendations for the proposed information collection should be sent directly to the following: Office of Management and Budget, Paperwork Reduction Project, Email: *OIRA_SUBMISSION@OMB.EOP.GOV*, Attn: Desk Officer for the Administration for Children and Families.

Copies of the proposed collection may be obtained by emailing *OPREinfocollection@acf.hhs.gov.*

Alternatively, copies can also be obtained by writing to the Administration for Children and Families, Office of Planning, Research, and Evaluation, 330 C Street SW, Washington, DC 20201, Attn: OPRE Reports Clearance Officer. All requests, emailed or written, should be identified by the title of the information collection.

SUPPLEMENTARY INFORMATION:

Description: ACF is proposing data collection as part of the study, ''Survey of Youth Transitioning from Foster Care.'' This Notice provides the opportunity to comment on a survey of youth with current or recent involvement in foster care.

Primary data collected includes a one-time survey with up to 780 youth aged 18 or 19 who were in foster care during their 17th year. The survey will be conducted in-person, with both field interviewer-administered items and Audio-Computer Assisted Self-Interview (ACASI) items that the youth will complete privately for sensitive topics. Survey questions will be focused on the youths' demographic data, trafficking and other victimization histories, internal and external assets, and risk and protective factors. Involvement with child welfare and juvenile justice systems, and utilization of other services will also be addressed in the data collection.

Respondents: Youth aged 18 or 19 who were in foster care during their 17th year.

Annual Burden Estimates

Data collection is expected to take place over 2 years.

Instrument	Total number of respondents	Annual number of respondents	Number of responses per respondent	Average burden hours per response	Annual burden hours
Survey of Youth Transitioning from Foster Care	780	390	1	1.2	468

Estimated Total Annual Burden Hours: 468.

Authority: Section 476(a)(1–2) (42 U.S.C. 676) of the Social Security Act Part E—Federal Payments for Foster Care and Adoption Assistance.

Mary B. Jones,

ACF/OPRE Certifying Officer.

[FR Doc. 2020–04805 Filed 3–9–20; 8:45 am]

BILLING CODE 4184–25–P

DEPARTMENT OF HEALTH AND HUMAN SERVICES

Food and Drug Administration

[Docket No. FDA–2019–N–6084]

Type 2 Diabetes Mellitus: Evaluating the Safety of New Drugs for Improving Glycemic Control; Draft Guidance for Industry; Availability

AGENCY: Food and Drug Administration, HHS.

ACTION: Notice of availability.

SUMMARY: The Food and Drug Administration (FDA or Agency) is announcing the availability of a draft guidance for industry entitled ''Type 2 Diabetes Mellitus: Evaluating the Safety of New Drugs for Improving Glycemic Control.'' This draft guidance replaces the guidance for industry entitled ''Diabetes Mellitus—Evaluating Cardiovascular Risk in New Antidiabetic Therapies to Treat Type 2 Diabetes'' and the draft guidance for industry ''Diabetes Mellitus: Developing Drugs and Therapeutic Biologics for Treatment and Prevention,'' both of which are being withdrawn. This draft guidance outlines the Agency's current recommendations on the evaluation of safety for new drugs and biologics to improve glycemic control in patients with type 2 diabetes. Publication of this guidance is intended to provide clarity on the expectations for the development of drugs and biologics to improve glycemic control and to serve as a focus for commentary and feedback.

DATES: Submit either electronic or written comments on the draft guidance by June 8, 2020 to ensure that the Agency considers your comment on this draft guidance before it begins work on the final version of the guidance.

ADDRESSES: You may submit comments on any guidance at any time as follows:

Electronic Submissions

Submit electronic comments in the following way:

- *Federal eRulemaking Portal: https://www.regulations.gov.* Follow the instructions for submitting comments. Comments submitted electronically, including attachments, to *https://www.regulations.gov* will be posted to the docket unchanged. Because your comment will be made public, you are solely responsible for ensuring that your comment does not include any confidential information that you or a third party may not wish to be posted, such as medical information, your or anyone else's Social Security number, or confidential business information, such as a manufacturing process. Please note that if you include your name, contact information, or other information that identifies you in the body of your comments, that information will be posted on *https://www.regulations.gov.*
- If you want to submit a comment with confidential information that you do not wish to be made available to the public, submit the comment as a written/paper submission and in the manner detailed (see ''Written/Paper Submissions'' and ''Instructions'').

Written/Paper Submissions

Submit written/paper submissions as follows:

- *Mail/Hand Delivery/Courier (for written/paper submissions*): Dockets Management Staff (HFA–305), Food and Drug Administration, 5630 Fishers Lane, Rm. 1061, Rockville, MD 20852.
- For written/paper comments submitted to the Dockets Management Staff, FDA will post your comment, as well as any attachments, except for information submitted, marked and identified, as confidential, if submitted as detailed in ''Instructions.''

Instructions: All submissions received must include the Docket No. FDA–2019–N–6084 for ''Type 2 Diabetes Mellitus: Evaluating the Safety of New Drugs for Improving Glycemic Control.'' Received comments will be placed in the docket and, except for those submitted as ''Confidential Submissions,'' publicly viewable at *https://www.regulations.gov* or at the Dockets Management Staff between 9 a.m. and 4 p.m., Monday through Friday.

- Confidential Submissions—To submit a comment with confidential information that you do not wish to be made publicly available, submit your comments only as a written/paper submission. You should submit two copies total. One copy will include the information you claim to be confidential with a heading or cover note that states ''THIS DOCUMENT CONTAINS CONFIDENTIAL INFORMATION.'' The Agency will review this copy, including the claimed confidential information, in its consideration of comments. The second copy, which will have the claimed confidential information redacted/blacked out, will be available for public viewing and posted on

https://www.regulations.gov. Submit both copies to the Dockets Management Staff. If you do not wish your name and contact information to be made publicly available, you can provide this information on the cover sheet and not in the body of your comments and you must identify this information as ''confidential.'' Any information marked as ''confidential'' will not be disclosed except in accordance with 21 CFR 10.20 and other applicable disclosure law. For more information about FDA's posting of comments to public dockets, see 80 FR 56469, September 18, 2015, or access the information at: *https://www.govinfo.gov/content/pkg/FR-2015-09-18/pdf/2015-23389.pdf.*

Docket: For access to the docket to read background documents or the electronic and written/paper comments received, go to *https://www.regulations.gov* and insert the docket number, found in brackets in the heading of this document, into the ''Search'' box and follow the prompts and/or go to the Dockets Management Staff, 5630 Fishers Lane, Rm. 1061, Rockville, MD 20852.

You may submit comments on any guidance at any time (see 21 CFR 10.115(g)(5)).

Submit written requests for single copies of the draft guidance to the Division of Drug Information, Center for Drug Evaluation and Research, Food and Drug Administration, 10001 New Hampshire Ave., Hillandale Building, 4th Floor, Silver Spring, MD 20993–0002. Send one self-addressed adhesive label to assist that office in processing your requests. See the **SUPPLEMENTARY INFORMATION** section for electronic access to the draft guidance document.

FOR FURTHER INFORMATION CONTACT: Silvana Borges, Center for Drug Evaluation and Research, Food and Drug Administration, 10903 New Hampshire Ave., Bldg. 22, Rm. 3200, Silver Spring, MD 20993–0002, 301–796–0963.

SUPPLEMENTARY INFORMATION:

I. Background

FDA is announcing the availability of a draft guidance for industry entitled ''Type 2 Diabetes Mellitus: Evaluating the Safety of New Drugs for Improving Glycemic Control.'' This draft guidance replaces the guidance for industry entitled ''Diabetes Mellitus—Evaluating Cardiovascular Risk in New Antidiabetic Therapies to Treat Type 2 Diabetes,'' published in December 2008, and the draft guidance for industry ''Diabetes Mellitus: Developing Drugs and Therapeutic Biologics for Treatment and Prevention,'' published in February 2008, both of which are being withdrawn.

In response to questions and concerns about increased cardiovascular risk with certain antidiabetic therapies, FDA convened an advisory committee meeting in July 2008 to discuss the role of cardiovascular risk assessments for the safety evaluation of drugs and biologics developed for the treatment of type 2 diabetes. Based, in part, on comments expressed at that meeting, the Agency issued a guidance for industry in December 2008 outlining recommendations on the evaluation of cardiovascular risk for new antidiabetic therapies. That guidance stated that developers should demonstrate that new antidiabetic drugs and biologics would not result in an unacceptable increase in cardiovascular risk.

Since that time, FDA has reviewed the results of several cardiovascular outcome trials (CVOTs) conducted to meet the December 2008 guidance recommendations. None of the CVOTs to date have identified an increased risk of ischemic cardiovascular events; some of the CVOTs have instead demonstrated a reduced risk for cardiovascular events. In light of the CVOT results, FDA is revisiting the recommendations of the December 2008 guidance and is now proposing an updated approach to evaluating the safety of new drugs and biologics to improve glycemic control. In addition, FDA is withdrawing the February 2008 guidance because its recommendations for safety assessment have become outdated.

FDA is establishing this docket to solicit input from stakeholders on all aspects of these issues, including comments on specific questions posed in section II, Additional Issues for Consideration.

This draft guidance is being issued consistent with FDA's good guidance practices regulation (21 CFR 10.115). The draft guidance, when finalized, will represent the current thinking of FDA on ''Type 2 Diabetes Mellitus: Evaluating the Safety of New Drugs for Improving Glycemic Control.'' It does not establish any rights for any person and is not binding on FDA or the public. You can use an alternative approach if it satisfies the requirements of the applicable statutes and regulations.

II. Additional Issues for Consideration

FDA is soliciting comments from stakeholders regarding the issues described in this notice and the draft guidance. In addition to any other aspects of the guidance that stakeholders may care to comment upon, FDA is interested in answers to the following questions/topics in particular:

A. Size of Population and Exposure to the Investigational Drug/Biologic

1. Is it more important to emphasize the number of patients exposed or the amount of exposure (*i.e.,* number of patient-years)? Or should there be expectations set for both parameters?

2. What would constitute a minimally acceptable database (either in number of patients, number of patient-years, or both) in terms of exposure to investigational drug/biologic at time of filing of the marketing application?

B. Demographic Characteristics of the Population

1. What are the important comorbid conditions to include?

2. What would be a minimally acceptable number of patients or number of patient-years to include for each important comorbid condition?

C. Necessary Safety Evaluations

1. Are there specific safety concerns for patients with type 2 diabetes that should be rigorously evaluated?

2. If there are specific safety concerns that should be rigorously evaluated, how should that assessment be conducted?

3. Is the adjudication of adverse events related to a specific safety concern a necessary part of the safety assessment? If so, should it be conducted by an independent, blinded adjudication committee or would other means of adjudication be adequate?

III. Paperwork Reduction Act of 1995

This draft guidance refers to previously approved FDA collections of information. These collections of information are subject to review by the Office of Management and Budget (OMB) under the Paperwork Reduction Act of 1995 (44 U.S.C. 3501–3521). The collection of information in 21 CFR part 312 has been approved under OMB control number 0910–0014; the collection of information in 21 CFR part 314 has been approved under OMB control number 0910–0001; and the collection of information for clinical trial data monitoring committees has been approved under OMB control number 0910–0581.

IV. Electronic Access

Persons with access to the internet may obtain the draft guidance at either *https://www.fda.gov/drugs/guidance-compliance-regulatory-information/guidances-drugs* or *https://www.regulations.gov.*

Dated: March 5, 2020.

Lowell J. Schiller,

Principal Associate Commissioner for Policy.

[FR Doc. 2020–04877 Filed 3–9–20; 8:45 am]

BILLING CODE 4164–01–P

DEPARTMENT OF HEALTH AND HUMAN SERVICES

Food and Drug Administration

[Docket No. FDA–2020–N–0008]

Advisory Committee; Gastrointestinal Drugs Advisory Committee, Renewal

AGENCY: Food and Drug Administration, HHS.

ACTION: Notice; renewal of advisory committee.

SUMMARY: The Food and Drug Administration (FDA) is announcing the renewal of the Gastrointestinal Drugs Advisory Committee by the Commissioner of Food and Drugs (the Commissioner). The Commissioner has determined that it is in the public interest to renew the Gastrointestinal Drugs Advisory Committee for an additional 2 years beyond the charter expiration date. The new charter will be in effect until March 3, 2022.

DATES: Authority for the Gastrointestinal Drugs Advisory Committee will expire on March 3, 2022, unless the Commissioner formally determines that renewal is in the public interest.

FOR FURTHER INFORMATION CONTACT: Jay Fajiculay, Division of Advisory Committee and Consultant Management, Center for Drug Evaluation and Research, Food and Drug Administration, 10903 New Hampshire Ave., Bldg. 31, Rm. 2417, Silver Spring, MD 20993–0002, 301–796–9001, Fax: 301–847–8533, email: *GIDAC@fda.hhs.gov.*

SUPPLEMENTARY INFORMATION: Pursuant to 41 CFR 102–3, FDA is announcing the renewal of the Gastrointestinal Drugs Advisory Committee (the Committee). The committee is a discretionary Federal advisory committee established to provide advice to the Commissioner.

The Committee advises the Commissioner or designee in discharging responsibilities as they relate to helping to ensure safe and effective drugs for human use and, as required, any other product for which FDA has regulatory responsibility.

The Committee reviews and evaluates available data concerning the safety and effectiveness of marketed and investigational human drug products for use in the treatment of gastrointestinal diseases and makes appropriate recommendations to the Commissioner.

Pursuant to its Charter, the Committee shall consist of a core of 11 voting members including the Chair. Members and the Chair are selected by the Commissioner or designee from among authorities knowledgeable in the fields of gastroenterology, endocrinology, surgery, clinical pharmacology, physiology, pathology, liver function, motility, esophagitis, and statistics. Members will be invited to serve for overlapping terms of up to 4 years. Almost all non-Federal members of this committee serve as Special Government Employees. The core of voting members may include one technically qualified member, selected by the Commissioner or designee, who is identified with consumer interests and is recommended by either a consortium of consumer-oriented organizations or other interested persons. In addition to the voting members, the Committee may include one non-voting representative member who is identified with industry interests. There may also be an alternate industry representative.

Further information regarding the most recent charter and other information can be found at *https://www.fda.gov/advisory-committees/human-drug-advisory-committees/gastrointestinal-drugs-advisory-committee* or by contacting the Designated Federal Officer (see **FOR FURTHER INFORMATION CONTACT**). In light of the fact that no change has been made to the committee name or description of duties, no amendment will be made to 21 CFR 14.100.

This document is issued under the Federal Advisory Committee Act (5 U.S.C. app.). For general information related to FDA advisory committees, please check *https://www.fda.gov/AdvisoryCommittees/default.htm.*

Dated: March 4, 2020.

Lowell J. Schiller,

Principal Associate Commissioner for Policy.

[FR Doc. 2020–04778 Filed 3–9–20; 8:45 am]

BILLING CODE 4164–01–P

DEPARTMENT OF HEALTH AND HUMAN SERVICES

Food and Drug Administration

[Docket No. FDA–2017–N–6644]

Fiscal Year 2020 Generic Drug Regulatory Science Initiatives; Public Workshop; Request for Comments

AGENCY: Food and Drug Administration, HHS.

ACTION: Notice of public workshop; request for comments.

SUMMARY: The Food and Drug Administration (FDA, the Agency, or we) is announcing the following public workshop entitled ''FY 2020 Generic Drug Regulatory Science Initiatives.'' The purpose of the public workshop is to provide an overview of the status of regulatory science initiatives for generic drugs and an opportunity for public input on these initiatives. FDA is seeking this input from a variety of stakeholders—industry, academia, patient advocates, professional societies, and other interested parties—as it fulfills its commitment under the Generic Drug User Fee Amendments of 2017 (GDUFA II) to develop an annual list of regulatory science initiatives specific to generic drugs. FDA will take the information it obtains from the public workshop into account in developing its fiscal year (FY) 2021 regulatory science initiatives.

DATES: The public workshop will be held on May 4, 2020, from 8:30 a.m. to 4:30 p.m. Submit either electronic or written comments on this public workshop by June 4, 2020. See the **SUPPLEMENTARY INFORMATION** section for registration date and information.

ADDRESSES: The public workshop will be held at the FDA White Oak Campus, 10903 New Hampshire Ave., Bldg. 31, Conference Center, the Great Room (Rm. 1503, sections B and C), Silver Spring, MD 20993–0002. Entrance for the public workshop participants (non-FDA employees) is through Bldg. 1, where routine security check procedures will be performed. For parking and security information, please refer to *https://www.fda.gov/AboutFDA/WorkingatFDA/BuildingsandFacilities/WhiteOakCampusInformation/ucm241740.htm.*

You may submit comments as follows. Please note that late, untimely filed comments will not be considered. Electronic comments must be submitted on or before June 4, 2020. The *https://www.regulations.gov* electronic filing system will accept comments until midnight Eastern Time at the end of June 4, 2020. Comments received by mail/hand delivery/courier (for written/paper submissions) will be considered timely if they are postmarked or the delivery service acceptance receipt is on or before that date.

Electronic Submissions

Submit electronic comments in the following way:

- *Federal eRulemaking Portal: https://www.regulations.gov.* Follow the instructions for submitting comments. Comments submitted electronically,

including attachments, to *https://www.regulations.gov* will be posted to the docket unchanged. Because your comment will be made public, you are solely responsible for ensuring that your comment does not include any confidential information that you or a third party may not wish to be posted, such as medical information, your or anyone else's Social Security number, or confidential business information, such as a manufacturing process. Please note that if you include your name, contact information, or other information that identifies you in the body of your comments, that information will be posted on *https://www.regulations.gov.*

• If you want to submit a comment with confidential information that you do not wish to be made available to the public, submit the comment as a written/paper submission and in the manner detailed (see ''Written/Paper Submissions'' and ''Instructions'').

Written/Paper Submissions

Submit written/paper submissions as follows:

• *Mail/Hand Delivery/Courier (for written/paper submissions):* Dockets Management Staff (HFA–305), Food and Drug Administration, 5630 Fishers Lane, Rm. 1061, Rockville, MD 20852.

• For written/paper comments submitted to the Dockets Management Staff, FDA will post your comment, as well as any attachments, except for information submitted, marked and identified, as confidential, if submitted as detailed in ''Instructions.''

Instructions: All submissions received must include the Docket No. FDA–2017–N–6644 for ''FY 2020 Generic Drug Regulatory Science Initiatives; Public Workshop; Request for Comments.'' Received comments, those filed in a timely manner (see **ADDRESSES**), will be placed in the docket and, except for those submitted as ''Confidential Submissions,'' publicly viewable at *https://www.regulations.gov* or at the Dockets Management Staff between 9 a.m. and 4 p.m., Monday through Friday.

• Confidential Submissions—To submit a comment with confidential information that you do not wish to be made publicly available, submit your comments only as a written/paper submission. You should submit two copies total. One copy will include the information you claim to be confidential with a heading or cover note that states ''THIS DOCUMENT CONTAINS CONFIDENTIAL INFORMATION.'' The Agency will review this copy, including the claimed confidential information, in its consideration of comments. The second copy, which will have the claimed confidential information redacted/blacked out, will be available for public viewing and posted on *https://www.regulations.gov.* Submit both copies to the Dockets Management Staff. If you do not wish your name and contact information to be made publicly available, you can provide this information on the cover sheet and not in the body of your comments and you must identify this information as ''confidential.'' Any information marked as ''confidential'' will not be disclosed except in accordance with 21 CFR 10.20 and other applicable disclosure law. For more information about FDA's posting of comments to public dockets, see 80 FR 56469, September 18, 2015, or access the information at: *https://www.govinfo.gov/content/pkg/FR-2015-09-18/pdf/2015-23389.pdf.*

Docket: For access to the docket to read background documents or the electronic and written/paper comments received, go to *https://www.regulations.gov* and insert the docket number, found in brackets in the heading of this document, into the ''Search'' box and follow the prompts and/or go to the Dockets Management Staff, 5630 Fishers Lane, Rm. 1061, Rockville, MD 20852.

FOR FURTHER INFORMATION CONTACT: Stephanie Choi, Center for Drug Evaluation and Research, Food and Drug Administration, 10903 New Hampshire Ave., Bldg. 75, Rm. 4732, Silver Spring, MD 20993, 240–402–7960, *Stephanie.Choi@fda.hhs.gov;* or Robert Lionberger, Center for Drug Evaluation and Research, Food and Drug Administration, 10903 New Hampshire Ave., Bldg. 75, Rm. 4722, Silver Spring, MD 20993, 240–402–7957, *Robert.Lionberger@fda.hhs.gov.*

SUPPLEMENTARY INFORMATION:

I. Background

In July 2012, Congress passed the Generic Drug User Fee Amendments of 2012 (GDUFA I) (Pub. L. 112–144). GDUFA I was designed to enhance public access to safe, high-quality generic drugs and to modernize the generic drug program. To support this goal, FDA agreed in the GDUFA I commitment letter [1] to work with industry and interested stakeholders on identifying regulatory science initiatives specific to generic drugs for each fiscal year covered by GDUFA I.

In August 2017, GDUFA I was reauthorized until September 2022 through GDUFA II (Pub. L. 115–52). In the GDUFA II commitment letter,[2] FDA agreed to conduct annual public workshops ''to solicit input from industry and stakeholders for inclusion in an annual list of GDUFA II [r]egulatory [s]cience initiatives.'' The public workshop scheduled for May 4, 2020, seeks to fulfill this agreement.

II. Topics for Discussion at the Public Workshop

The purpose of the public workshop is to obtain input from industry and other interested stakeholders on the identification of generic drug regulatory science initiatives for FY 2021.

FDA is particularly interested in receiving input in the following four topic areas:

1. Post-market surveillance of generic drugs
2. Drug-device combination products
3. In vitro bioequivalence methods
4. Data analysis and model-based bioequivalence

FDA will consider all comments made at this workshop or received through the docket (see **ADDRESSES**) as it develops its FY 2021 regulatory science initiatives. Information concerning the regulatory science initiatives for generic drugs can be found at *https://www.fda.gov/gdufaregscience.*

III. Participating in the Public Workshop

Registration: To register for the public workshop, please provide complete contact information for each attendee, including name, title, affiliation, address, email, and telephone to *GDUFARegulatoryScience@fda.hhs.gov.* For planning purposes, please also indicate in the email: (1) Whether attendance will be by webcast or in person and (2) the desired breakout session of attendance. Four breakout sessions will be held concurrently in the afternoon based on the following 4 areas: (1) Post-market surveillance of generic drugs, (2) drug-device combination drug products, (3) in-vitro bioequivalence methods, and (4) data analysis and model-based bioequivalence.

Registration is free and based on space availability, with priority given to early registrants. Persons interested in attending this public workshop must register online by April 3, 2020, midnight Eastern Time. Early registration is recommended because seating is limited; therefore, FDA may limit the number of participants from each organization. Registrants will

[1] The GDUFA I commitment letter is available at *https://www.fda.gov/downloads/ForIndustry/UserFees/GenericDrugUserFees/UCM282505.pdf.*

[2] The GDUFA II commitment letter is available at *https://www.fda.gov/downloads/ForIndustry/UserFees/GenericDrugUserFees/UCM525234.pdf.*

receive confirmation when they have been accepted.

If you need special accommodations due to a disability, please contact Stephanie Choi (see **FOR FURTHER INFORMATION CONTACT**) no later than April 3, 2020.

Requests for Oral Presentations: During online registration you may indicate if you wish to present during a public comment session for a specific breakout session, and which topic(s) you wish to address. We will do our best to accommodate requests to make public comments (and requests to participate in the focused sessions). Individuals and organizations with common interests are urged to consolidate or coordinate their presentations, and request time for a joint presentation, or submit requests for designated representatives to participate in the focused sessions. Following the close of registration, we will determine the amount of time allotted to each presenter and the approximate time each oral presentation is to begin, and will select and notify participants by April 10, 2020. All requests to make oral presentations must be received by the close of registration on April 3, 2020, midnight Eastern Time. If selected for presentation, any presentation materials must be emailed to *GDUFARegulatoryScience@fda.hhs.gov* no later than April 24, 2020, midnight Eastern Time. No commercial or promotional material will be permitted to be presented or distributed at the public workshop.

Persons attending FDA's workshops are advised that FDA is not responsible for providing access to electrical outlets.

Streaming Webcast of the Public Workshop: This public workshop will also be webcast. Please register online by April 3, 2020, midnight Eastern Time to attend the workshop remotely. Please note that remote attendees will not be able to speak or make presentations during the public comment session or during any other session of the workshop. To join the main sessions of the workshop via the webcast, please go to *https://collaboration.fda.gov/gdrsipw2020/.* Webcast information for the four breakout sessions will be provided separately via email upon successful registration.

If you have never attended a Connect Pro event before, test your connection at *https://collaboration.fda.gov/common/help/en/support/meeting_test.htm.* To get a quick overview of the Connect Pro program, visit *https://www.adobe.com/go/connectpro_overview.* FDA has verified the website addresses in this document, as of the date this document publishes in the **Federal Register**, but websites are subject to change over time.

Transcripts: Please be advised that as soon as a transcript of the public workshop is available, it will be accessible at *https://www.regulations.gov* or at *https://www.fda.gov/gdufaregscience.* It may be viewed at the Dockets Management Staff (see **ADDRESSES**). A link to the transcript will also be available on the internet at *https://www.fda.gov/gdufaregscience.*

Dated: March 4, 2020.

Lowell J. Schiller,

Principal Associate Commissioner for Policy.

[FR Doc. 2020–04866 Filed 3–9–20; 8:45 am]

BILLING CODE 4164–01–P

DEPARTMENT OF HEALTH AND HUMAN SERVICES

Office of the Secretary

Emergency Use Declaration

AGENCY: Office of the Secretary, Department of Health and Human Services.

ACTION: Notice.

SUMMARY: The Secretary of Health and Human Services (HHS) is issuing this notice pursuant to section 564 of the Federal Food, Drug, and Cosmetic (FD&C) Act. On February 4, 2020, the Secretary determined, pursuant to his authority under section 564 of the FD&C Act, that there is a public health emergency that has a significant potential to affect national security or the health and security of United States citizens living abroad and that involves a novel (new) coronavirus (nCoV) first detected in Wuhan City, Hubei Province, China in 2019 (2019–nCoV). The virus is now named SARS–CoV–2, which causes the illness COVID–19.

On the basis of this determination, he also declared that circumstances exist justifying the authorization of emergency use of personal respiratory protective devices during the COVID–19 outbreak, pursuant to section 564 of the FD&C Act, subject to the terms of any authorization issued under that section.

DATES: The determination was effective February 4, 2020, and this declaration is effective March 2, 2020.

FOR FURTHER INFORMATION CONTACT: Robert P. Kadlec, M.D., MTM&H, MS, Assistant Secretary for Preparedness and Response, Office of the Secretary, Department of Health and Human Services, 200 Independence Avenue SW, Washington, DC 20201, Telephone (202) 205–2882 (this is not a toll free number).

SUPPLEMENTARY INFORMATION:

I. Background

Under Section 564 of the FD&C Act, the Commissioner of the Food and Drug Administration (FDA), acting under delegated authority from the Secretary of HHS, may issue an Emergency Use Authorization (EUA), authorizing (1) the emergency use of an unapproved drug, an unapproved or uncleared device, or an unlicensed biological product; or (2) an unapproved use of an approved drug, approved or cleared device, or licensed biological product. Before an EUA may be issued, the Secretary of HHS must declare that circumstances exist justifying the authorization based on one of four determinations: (1) A determination by the Secretary of Homeland Security that there is a domestic emergency, or a significant potential for a domestic emergency, involving a heightened risk of attack with a, chemical, biological, radiological, or nuclear (''CBRN'') agent or agents; (2) the identification of a material threat by the Secretary of Homeland Security, pursuant to section 319F–2 of the Public Health Service (PHS) Act,[1] sufficient to affect national security or the health and security of United States citizens living abroad; (3) a determination by the Secretary of Defense that there is a military emergency, or a significant potential for a military emergency, involving a heightened risk to United States military forces, including personnel operating under the authority of title 10 or title 50, of attack with (i) a biological, chemical, radiological, or nuclear agent or agents; or (ii) an agent or agents that may cause, or are otherwise associated with, an imminently life-threatening and specific risk to United States military forces; or (4) a determination by the Secretary that there is a public health emergency, or a significant potential for a public health emergency, that affects, or has a significant potential to affect, national security or the health and security of United States citizens living abroad, and that involves a CBRN agent or agents, or a disease or condition that may be attributable to such agent or agents.[2]

Based on any of these four determinations, the Secretary of HHS may then declare that circumstances

[1] 42 U.S.C. 247d–6b.

[2] As amended by the Pandemic and All-Hazards Preparedness Reauthorization Act, Public Law 113–5, the Secretary may make determination of a public health emergency, or a significant potential for a public health emergency, under section 564 of the FD&C Act. The Secretary is no longer required to make a determination of a public health emergency in accordance with section 319 of the PHS Act, 42 U.S.C. 247d to support a determination or declaration made under section 564 of the FD&C Act.

exist that justify the EUA, at which point the FDA Commissioner may issue an EUA if the criteria for issuance of such an authorization under section 564 of the FD&C Act are met.

The Centers for Disease Control and Prevention (CDC), HHS, requested that the FDA, HHS, issue an EUA for personal respiratory protective devices to allow the Department to take preparedness measures, based on information currently available about the virus that causes COVID–19. The determination of a public health emergency, and the declaration that circumstances exist justifying emergency use of personal respiratory protective devices by the Secretary of HHS, as described below, enable the FDA Commissioner to issue an EUA for respiratory protective devices for emergency use under section 564 of the FD&C Act.

II. Determination by the Secretary of Health and Human Services

On February 4, 2020, pursuant to section 564 of the FD&C Act, I determined that there is a public health emergency that has a significant potential to affect national security or the health and security of United States citizens living abroad and that involves a novel (new) coronavirus (nCoV) first detected in Wuhan City, Hubei Province, China in 2019 (2019–nCoV). The virus is now named SARS–CoV–2, which causes the illness COVID–19.

III. Declaration of the Secretary of Health and Human Services

On March 2, 2020, on the basis of my determination of a public health emergency that has a significant potential to affect national security or the health and security of United States citizens living abroad and that involves the novel (new) coronavirus, I declared that circumstances exist justifying the authorization of emergency use of personal respiratory protective devices during the COVID–19 outbreak, pursuant to section 564 of the FD&C Act, subject to the terms of any authorization issued under that section.

Notice of the EUAs issued by the FDA Commissioner pursuant to this determination and declaration will be provided promptly in the **Federal Register** as required under section 564 of the FD&C Act.

Alex M. Azar II,

Secretary.

[FR Doc. 2020–04823 Filed 3–9–20; 8:45 am]

BILLING CODE P

DEPARTMENT OF HEALTH AND HUMAN SERVICES

National Institutes of Health

National Institute of Allergy and Infectious Diseases; Notice of Closed Meeting

Pursuant to section 10(d) of the Federal Advisory Committee Act, as amended, notice is hereby given of the following meeting.

The meeting will be closed to the public in accordance with the provisions set forth in sections 552b(c)(4) and 552b(c)(6), Title 5 U.S.C., as amended. The grant applications and the discussions could disclose confidential trade secrets or commercial property such as patentable material, and personal information concerning individuals associated with the grant applications, the disclosure of which would constitute a clearly unwarranted invasion of personal privacy.

Name of Committee: National Institute of Allergy and Infectious Diseases Special Emphasis Panel; Investigator Initiated Extended Clinical Trial (R01 Clinical Trial Required).

Date: March 24, 2020.

Time: 1:00 p.m. to 6:00 p.m.

Agenda: To review and evaluate grant applications.

Place: National Institute of Allergy and Infectious Diseases, National Institutes of Health, 5601 Fishers Lane, Room 3G53A, Rockville, MD 20892 (Telephone Conference Call).

Contact Person: Julio C. Aliberti, Ph.D., Scientific Review Officer, Immunology Review Branch, Scientific Review Program, Division of Extramural Activities, National Institute of Allergy and Infectious Diseases, National Institutes of Health, 5601 Fishers Lane, Room 3G53A, Rockville, MD 20892–9823, 301–761–7322, *julio.aliberti@nih.gov.*

(Catalogue of Federal Domestic Assistance Program Nos. 93.855, Allergy, Immunology, and Transplantation Research; 93.856, Microbiology and Infectious Diseases Research, National Institutes of Health, HHS)

Dated: March 4, 2020.

Tyeshia M. Roberson,

Program Analyst, Office of Federal Advisory Committee Policy.

[FR Doc. 2020–04780 Filed 3–9–20; 8:45 am]

BILLING CODE 4140–01–P

DEPARTMENT OF HEALTH AND HUMAN SERVICES

National Institutes of Health

National Institute of Allergy and Infectious Diseases; Notice of Closed Meeting

Pursuant to section 10(d) of the Federal Advisory Committee Act, as amended, notice is hereby given of the following meeting.

The meeting will be closed to the public in accordance with the provisions set forth in sections 552b(c)(4) and 552b(c)(6), Title 5 U.S.C., as amended. The grant applications and the discussions could disclose confidential trade secrets or commercial property such as patentable material, and personal information concerning individuals associated with the grant applications, the disclosure of which would constitute a clearly unwarranted invasion of personal privacy.

Name of Committee: National Institute of Allergy and Infectious Diseases Special Emphasis Panel; NIH Support for Conferences and Scientific Meetings (Parent R13 Clinical Trial Not Allowed).

Date: April 6–8, 2020.

Time: 8:00 a.m. to 1:00 p.m.

Agenda: To review and evaluate grant applications.

Place: National Institute of Allergy and Infectious Diseases, National Institutes of Health, 5601 Fishers Lane, Room 3F21B, Rockville, MD 20892 (Virtual Meeting).

Contact Person: Maryam Feili-Hariri, Ph.D., Scientific Review Officer, Scientific Review Program, Division of Extramural Activities, National Institute of Allergy and Infectious Diseases, National Institutes of Health, 5601 Fishers Lane, Room 3F21B, Bethesda, MD 20892–9834, (240) 669–5026, *haririmf@niaid.nih.gov.*

(Catalogue of Federal Domestic Assistance Program Nos. 93.855, Allergy, Immunology, and Transplantation Research; 93.856, Microbiology and Infectious Diseases Research, National Institutes of Health, HHS)

Dated: March 4, 2020.

Tyeshia M. Roberson,

Program Analyst, Office of Federal Advisory Committee Policy.

[FR Doc. 2020–04782 Filed 3–9–20; 8:45 am]

BILLING CODE 4140–01–P

DEPARTMENT OF HEALTH AND HUMAN SERVICES

National Institutes of Health

Center for Scientific Review; Notice of Closed Meetings

Pursuant to section 10(d) of the Federal Advisory Committee Act, as amended, notice is hereby given of the following meetings.

The meetings will be closed to the public in accordance with the provisions set forth in sections 552b(c)(4) and 552b(c)(6), Title 5 U.S.C., as amended. The grant applications and the discussions could disclose confidential trade secrets or commercial property such as patentable material, and personal information concerning individuals associated with the grant

applications, the disclosure of which would constitute a clearly unwarranted invasion of personal privacy.

Name of Committee: Center for Scientific Review Special Emphasis Panel; PAR–18–901: Chronic, Non-Communicable Diseases and Disorders Across the Lifespan: Fogarty International Research Training Award.
Date: April 2, 2020.
Time: 8:00 a.m. to 5:00 p.m.
Agenda: To review and evaluate grant applications.
Place: National Institutes of Health, Rockledge II, 6701 Rockledge Dr., Bethesda, MD 20892 (Virtual Meeting).
Contact Person: Seetha Bhagavan, Ph.D., Scientific Review Officer, Center for Scientific Review, National Institutes of Health, 6701 Rockledge Drive, Room 5194, MSC 7846, Bethesda, MD 20892, (301) 237–9838, *bhagavas@csr.nih.gov.*

Name of Committee: Center for Scientific Review Special Emphasis Panel; PAR19–232: NIGMS Mature Synchrotron Resources for Structural Biology (P30).
Date: April 2, 2020.
Time: 8:00 a.m. to 8:00 p.m.
Agenda: To review and evaluate grant applications.
Place: Embassy Suites at the Chevy Chase Pavilion, 4300 Military Road NW, Washington, DC 20015.
Contact Person: Sudha Veeraraghavan, Ph.D., Scientific Review Officer, Center for Scientific Review, National Institutes of Health, 6701 Rockledge Drive, Bethesda, MD 20892, 301–435–1504, *sudha.veeraraghavan@nih.gov.*

Name of Committee: Center for Scientific Review Special Emphasis Panel; RFA–OD19–029: The Intersection of Sex and Gender Influences on Health and Disease.
Date: April 2–3, 2020.
Time: 10:00 a.m. to 5:00 p.m.
Agenda: To review and evaluate grant applications.
Place: National Institutes of Health, Rockledge II, 6701 Rockledge Dr., Bethesda, MD 20892 (Virtual Meeting).
Contact Person: Elaine Sierra-Rivera, Ph.D., Scientific Review Officer, EMNR IRG, Center for Scientific Review, National Institutes of Health, 6701 Rockledge Drive, Room 6182, MSC 7892, Bethesda, MD 20892, 301 435–2514, *riverase@csr.nih.gov.*

Name of Committee: Center for Scientific Review Special Emphasis Panel; PAR–18–884: Novel Approaches to Safe, Non-Invasive, Real Time Assessment of Human Placenta Development and Function Across Pregnancy.
Date: April 2, 2020.
Time: 1:00 p.m. to 5:00 p.m.
Agenda: To review and evaluate grant applications.
Place: National Institutes of Health, Rockledge II, 6701 Rockledge Dr., Bethesda, MD 20892 (Telephone Conference Call).
Contact Person: Andrew Maxwell Wolfe, Scientific Review Officer, Center for Scientific Review, NIH, 6701 Rockledge Dr., Room 6214, Bethesda, MD 20892, (301) 402–3019, *andrew.wolfe@nih.gov.*

Name of Committee: Center for Scientific Review Special Emphasis Panel; PAR–18–884: Novel Approaches to Safe, Non-Invasive, Real Time Assessment of Human Placenta Development and Function Across Pregnancy.
Date: April 2, 2020.
Time: 1:00 p.m. to 5:00 p.m.
Agenda: To review and evaluate grant applications.
Place: National Institutes of Health, Rockledge II, 6701 Rockledge Dr., Bethesda, MD 20892 (Telephone Conference Call).
Contact Person: Hui Chen, MD, Scientific Review Officer, Center for Scientific Review, National Institutes of Health, 6701 Rockledge Drive, Room 6164, Bethesda, MD 20892, 301–435–1044, *chenhui@csr.nih.gov.*

Name of Committee: Center for Scientific Review Special Emphasis Panel; Member Conflict: Radiation Therapeutics and Biology.
Date: April 2, 2020.
Time: 12:00 p.m. to 3:00 p.m.
Agenda: To review and evaluate grant applications.
Place: National Institutes of Health, Rockledge II, 6701 Rockledge Dr., Bethesda, MD 20892 (Telephone Conference Call).
Contact Person: Syed M Quadri, Ph.D., Scientific Review Officer, Center for Scientific Review, National Institutes of Health, 6701 Rockledge Drive, Room 6210, MSC 7804, Bethesda, MD 20892, 301–435–1211, *quadris@csr.nih.gov.*

Name of Committee: Center for Scientific Review Special Emphasis Panel; Small Business: STEM Education and Training.
Date: April 2, 2020.
Time: 12:00 p.m. to 4:00 p.m.
Agenda: To review and evaluate grant applications.
Place: National Institutes of Health, Rockledge II, 6701 Rockledge Dr., Bethesda, MD 20892 (Telephone Conference Call).
Contact Person: John H Newman, Ph.D., Scientific Review Officer, Center for Scientific Review, National Institutes of Health, 6701 Rockledge Drive, Room 3222, MSC 7808, Bethesda, MD 20892, (301) 435–0628, *newmanjh@csr.nih.gov.*

(Catalogue of Federal Domestic Assistance Program Nos. 93.306, Comparative Medicine; 93.333, Clinical Research, 93.306, 93.333, 93.337, 93.393–93.396, 93.837–93.844, 93.846–93.878, 93.892, 93.893, National Institutes of Health, HHS)

Dated: March 4, 2020.

Ronald J. Livingston, Jr.,

Program Analyst, Office of Federal Advisory Committee Policy.

[FR Doc. 2020–04781 Filed 3–9–20; 8:45 am]

BILLING CODE 4140–01–P

ADVISORY COUNCIL ON HISTORIC PRESERVATION

Notice of Advisory Council on Historic Preservation Quarterly Business Meeting

AGENCY: Advisory Council on Historic Preservation.

ACTION: Notice of meeting.

SUMMARY: Notice is hereby given that the Advisory Council on Historic Preservation (ACHP) will have its next quarterly meeting on Friday, March 13, 2020.

DATES: The quarterly meeting will take place on Friday, March 13, 2020 starting at 8:30 a.m.

ADDRESSES: The meeting will be held in Room SR325 at the Russell Senate Office Building at Constitution and Delaware Avenues NE, Washington, DC.

FOR FURTHER INFORMATION CONTACT: Tanya DeVonish, 202–517–0205, *tdevonish@achp.gov.*

SUPPLEMENTARY INFORMATION: The Advisory Council on Historic Preservation (ACHP) is an independent federal agency that promotes the preservation, enhancement, and sustainable use of our nation's diverse historic resources, and advises the President and the Congress on national historic preservation policy. The goal of the National Historic Preservation Act (NHPA), which established the ACHP in 1966, is to have federal agencies act as responsible stewards of our nation's resources when their actions affect historic properties. The ACHP is the only entity with the legal responsibility to encourage federal agencies to factor historic preservation into their decision making. For more information on the ACHP, please visit our website at *www.achp.gov.*

The agenda for the upcoming quarterly meeting of the ACHP is the following:

I. Chairman's Welcome and Report
II. Swearing-in of New Member
III. ACHP Administrative Matters
IV. Historic Preservation Policy and Programs
V. Section 106 Issues
  A. Digital Information Task Force
  B. Section 3 Report Development
  C. Leveraging Federal Historic Buildings Workgroup
  D. Regulations Updates
  i. National Register Regulations
  ii. NEPA Regulations
VI. Other Reports
VII. New Business
VIII. Adjourn

The meetings of the ACHP are open to the public. If you need special accommodations due to a disability, please contact Tanya DeVonish, 202–517–0205 or *tdevonish@achp.gov,* at least seven (7) days prior to the meeting.

Authority: 54 U.S.C. 304102.

Dated: February 20, 2020.

Javier E. Marques,

General Counsel.

[FR Doc. 2020–04859 Filed 3–9–20; 8:45 am]

BILLING CODE 4310–K6–P

DEPARTMENT OF HOMELAND SECURITY

Federal Emergency Management Agency

[Docket ID FEMA–2020–0012]

Assistance to Firefighters Grant Program

AGENCY: Federal Emergency Management Agency (FEMA), Department of Homeland Security (DHS).

ACTION: Notice of availability.

SUMMARY: Pursuant to the Federal Fire Prevention and Control Act of 1974, as amended, the Administrator of FEMA is publishing this notice describing the Fiscal Year (FY) 2019 Assistance to Firefighters Grant (AFG) Program application process, deadlines, and award selection criteria. This notice explains the differences, if any, between these guidelines and those recommended by representatives of the national fire service leadership during the annual meeting of the Criteria Development Panel on Dec. 11, 2018. The application period for the FY 2019 AFG Program opened on Feb. 3, 2020 and will close on March 13, 2020, and was announced on the AFG website at *https://www.fema.gov/welcome-assistance-firefighters-grant-program,* as well as at *www.grants.gov.*

DATES: Grant applications for the Assistance to Firefighters Grant Program are being accepted electronically at *https://go.fema.gov,* from Feb. 3, 2020, through March 13, 2020, at 5 p.m. Eastern Time.

ADDRESSES: Assistance to Firefighters Grant Branch, DHS/FEMA, 400 C Street SW, 3N, Washington, DC 20472–3635.

FOR FURTHER INFORMATION CONTACT: Catherine Patterson, Branch Chief, Assistance to Firefighters Grant Branch, 1–866–274–0960.

SUPPLEMENTARY INFORMATION: The AFG Program awards grants directly to fire departments, non-affiliated emergency medical services (EMS) organizations, and State Fire Training Academies (SFTAs) for the purpose of enhancing the health and safety of first responders and improving their abilities to protect the public from fire and fire-related hazards.

Applications for the FY 2019 AFG Program are being submitted and processed online at *https://go.fema.gov.* Before the application period started, the FY 2019 AFG Notice of Funding Opportunity (NOFO) was published on the AFG website. The AFG website provides additional information and materials useful to applicants including Frequently Asked Questions, a Get Ready Guide, and a Quick Reference Guide. Based on past AFG application periods, FEMA anticipates receiving 10,000 to 15,000 applications for the FY 2019 AFG Program, and the ability to award approximately 2,500 grants.

Congressional Appropriations

For the FY 2019 AFG Program, Congress appropriated $350 million (Consolidated Appropriations Act, 2019, Pub. L. 116–6). From this amount, $315 million will be made available for AFG awards. In addition, Section 33 of the Federal Fire Prevention and Control Act of 1974, as amended (15 U.S.C. 2229), requires that a minimum of 10 percent of available funds be expended for Fire Prevention and Safety Grants (FP&S). FP&S awards will be made directly to local fire departments and to local, regional, state, or national entities recognized for their expertise in the fields of fire prevention and firefighter safety research and development. Funds appropriated for FY 2019 will be available for obligation and award until Sept. 30, 2020.

The Federal Fire Prevention and Control Act of 1974 further directs FEMA to administer these appropriations according to the following requirements:

- Career fire department: Not less than 25 percent of available grant funds.
- Volunteer fire department: Not less than 25 percent of available grant funds.
- Combination fire department and departments using paid-on-call firefighting personnel: Not less than 25 percent of available grant funds.
- Open competition (career, volunteer, and/or combination fire departments and departments using paid-on-call firefighting personnel): Not less than 10 percent of available grant funds awarded.
- Emergency Medical Services (EMS) providers including fire departments and nonaffiliated EMS organizations: Not less than 3.5 percent of available grant funds awarded, with nonaffiliated EMS providers receiving no more than 2 percent of the total available grant funds.
- State fire training academies: Not more than 3 percent of available grant funds shall be collectively awarded to State Fire Training Academy applicants, with a maximum of $500,000 per applicant.
- Vehicles: Not more than 25 percent of available grant funds may be used for the purchase of vehicles; 10 percent of those vehicle funds will be dedicated to the funding of ambulances. Vehicle funds will be distributed as equally as possible among urban, suburban, and rural community applicants.
- Micro grants: This is a voluntary funding limitation choice made by the applicant for requests submitted within the operations and safety activity; it is not an additional funding opportunity. Micro grants are awards that have a Federal participation (share) that does not exceed $50,000. Only fire departments and nonaffiliated EMS organizations are eligible to choose micro grants, and the only eligible micro grants requests are for training, equipment, personal protective equipment (PPE), and wellness and fitness activities. Applicants that select micro grants as a funding opportunity may receive additional consideration for award. If an applicant selects micro grants in their application, they will be limited in the total amount of funding their organization can be awarded; if they are requesting funding in excess of $50,000 Federal participation, they should not select micro grants.

Background of the AFG Program

Since 2001, AFG has helped firefighters and other first responders to obtain critically needed equipment, protective gear, emergency vehicles, training, and other resources needed to protect the public and emergency personnel from fire and related hazards. FEMA awards grants on a competitive basis to the applicants that best address the AFG Program's priorities and provide the most compelling justification. Applications that best address AFG priorities, as identified in the Application Evaluation Criteria, will be reviewed by a panel composed of fire service personnel.

AFG has three program activities:

- Operations and Safety
- Vehicle Acquisition
- Regional Projects

The priorities for each activity are fully outlined in the NOFO.

Application Evaluation Criteria

Prior to making a grant award, FEMA is required by 31 U.S.C. 3321 note, 41 U.S.C. 2313, and 2 CFR 200.205 to review information available through any Office of Management and Budget (OMB) designated repositories of government-wide eligibility qualification or financial integrity information. Therefore, application evaluation criteria may include the following risk-based considerations of the applicant: (1) Financial stability; (2) quality of management systems and ability to meet management standards; (3) history of performance in managing Federal awards; (4) reports and findings

from audits; and (5) ability to effectively implement statutory, regulatory, or other requirements.

FEMA will rank all complete and submitted applications based on how well they match program priorities for the type of jurisdiction(s) served. Answers to activity specific questions provide information used to determine each application's ranking relative to the stated program priorities.

Funding priorities and criteria for evaluating AFG applications are established by FEMA based on the recommendations from the Criteria Development Panel (CDP). The CDP is comprised of fire service professionals who make recommendations to FEMA regarding the creation of new, or the modification of previously established, funding priorities, as well as developing criteria for awarding grants. The content of the NOFO reflects the implementation of CDP's recommendations with respect to the priorities and evaluation criteria for awards.

The nine major fire service organizations represented on the CDP:

- International Association of Fire Chiefs
- International Association of Fire Fighters
- National Volunteer Fire Council
- National Fire Protection Association
- National Association of State Fire Marshals
- International Association of Arson Investigators
- International Society of Fire Service Instructors
- North American Fire Training Directors
- Congressional Fire Service Institute

Review and Selection Process

AFG applications are reviewed through a multi-phase process. All applications are electronically pre-scored and ranked based on how well they align with the funding priorities outlined in this notice. Applications with the highest pre-score rankings are then scored competitively by (no less than three) members of the Peer Review Panel process. Applications will also be evaluated through a series of internal FEMA review processes for completeness, adherence to programmatic guidelines, technical feasibility, and anticipated effectiveness of the proposed project(s). Below is the process by which applications will be reviewed:

i. Pre-Scoring Process

The application undergoes an electronic pre-scoring process based on established program priorities listed within the NOFO and answers to activity specific questions within the online application. Application narratives are not reviewed during pre-scoring. Request details and budget information should comply with program guidance and statutory funding limitations. The pre-score is 50 percent of the total application score.

ii. Peer Review Panel Process

Applications with the highest pre-score will undergo peer review. The peer review is composed of fire service representatives recommended by CDP national organizations. The panelists assess the merits of each application based on the narrative section of the application, including the evaluation elements listed in the Narrative Evaluation Criteria below. Panelists will independently score each project within the application, discuss the merits and/or shortcomings of the application with his or her peers, and document the findings. A consensus is not required. The panel score is 50 percent of the total application score.

iii. Technical Evaluation Process

The highest ranked applications are considered within the fundable range. Applications that are in the fundable range undergo both a technical review by a subject-matter expert, as well as a FEMA AFG Branch review prior to being recommended for an award. The FEMA AFG Branch will assess the request with respect to costs, quantities, feasibility, eligibility, and recipient responsibility prior to recommending an application for award. Once the technical evaluation process is complete, the cumulative score for each application will be determined and FEMA will generate a final ranking of applications. FEMA will award grants based on this final ranking and the statutorily required funding limitations listed in this notice and the NOFO.

Narrative Evaluation Criteria

1. Financial Need (25 Percent)

Applicants should describe their financial need and how consistent it is with the intent of the AFG Program. This statement should include details describing the applicant's financial distress, summarized budget constraints, unsuccessful attempts to secure other funding, and proof that their financial distress is out of their control.

2. Project Description and Budget (25 Percent)

This statement should clearly explain the applicant's project objectives and the relationship between those objectives and the applicant's budget and risk analysis. The applicant should describe the activities, including program priorities or facility modifications, ensuring consistency with project objectives, the applicant's mission, and any national, State, and/or local requirements. Applicants should link the proposed expenses to operations and safety, as well as the completion of the project goals.

3. Operations and Safety/Cost Benefit (25 Percent)

Applicants should describe how they plan to address the operations and personal safety needs of their organization, including cost effectiveness and sharing assets. This statement should also include details about gaining the maximum benefits from grant funding by citing reasonable or required costs, such as specific overhead and administrative costs. The applicant's request should also be consistent with their mission and identify how funding will benefit their organization and personnel.

4. Statement of Effect/Impact on Daily Operations (25 Percent)

This statement should explain how these funds will enhance the organization's overall effectiveness. It should address how an award will improve daily operations and reduce the organization's risks. Applicants should include how frequently the requested items will be used, and in what capacity. Applicants should also indicate how the requested items will help the community and increase the organization's ability to save additional lives or property.

Eligible Applicants

Fire Departments: Fire departments operating in any of the 50 states, as well as fire departments in the District of Columbia, the Commonwealth of the Northern Mariana Islands, the U.S. Virgin Islands, Guam, American Samoa, the Commonwealth of Puerto Rico, or any federally-recognized Indian tribe or tribal organization.

A fire department is an agency or organization having a formally recognized arrangement with a state, territory, local, or tribal authority (city, county, parish, fire district, township, town, or other governing body) to provide fire suppression to a population within a geographically fixed primary first due response area.

Nonaffiliated EMS organizations: Nonaffiliated EMS organizations operating in any of the 50 states, as well as the District of Columbia, the Commonwealth of the Northern Mariana

Islands, the U.S. Virgin Islands, Guam, American Samoa, the Commonwealth of Puerto Rico, or any federally-recognized Indian tribe or tribal organization.

A nonaffiliated EMS organization is an agency or organization that is a public or private nonprofit emergency medical services entity providing medical transport that is not affiliated with a hospital and does not serve a geographic area in which emergency medical services are adequately provided by a fire department.

FEMA considers the following as hospitals under the AFG Program:

- Clinics
- Medical centers
- Medical colleges or universities
- Infirmaries
- Surgery centers
- Any other institutions, associations, or foundations providing medical, surgical, or psychiatric care and/or treatment for the sick or injured.

State Fire Training Academies: A State Fire Training Academy (SFTA) operates in any of the 50 states, as well as the District of Columbia, the Commonwealth of the Northern Mariana Islands, the U.S. Virgin Islands, Guam, American Samoa, and the Commonwealth of Puerto Rico. Applicants must be designated either by legislation or by a Governor's declaration as the sole fire service training agency within a State, territory, or the District of Columbia. The designated SFTA shall be the only agency/bureau/division, or entity within that state, territory, or the District of Columbia.

Ineligibility

- To avoid a duplication of benefits, FEMA reserves the right to review all program activities or grant applications where two or more organizations share a single facility. To be eligible as a separate organization, two or more fire departments or nonaffiliated EMS organizations will have different funding streams, personnel rosters, or Employee Identification Numbers (EINs). If two or more organizations share facilities and each submits an application in the same program area (*i.e.,* Equipment, Modify Facilities, Personal Protective Equipment, Training, and Wellness and Fitness Programs) FEMA will carefully review each program for eligibility.
- Fire-based EMS organizations are not eligible to apply as nonaffiliated EMS organizations. Fire-based EMS training and equipment must be requested by a fire department under the AFG component program Operations and Safety.
- Eligible applicants may submit only one application for each activity (*e.g.,* Operations and Safety or Regional), but may submit for multiple projects within each activity. Under the Vehicle Activity, applicants may submit one application for vehicles for their department and one separate application to host a Regional vehicle. Duplicate applications (more than one application in the same activity) may be disqualified.
- An Operations and Safety applicant may submit one application for an eligible project (*i.e.,* turn out gear); it may not submit a Regional application for the same project.

Statutory Limits to Funding

- Congress has enacted statutory limits to the amount of funding that a grant recipient may receive from the AFG Program in any single fiscal year (15 U.S.C. 2229(c)(2)) based on the population served. Awards will be limited based on the size of the population protected by the applicant, as indicated below. Notwithstanding the annual limits stated below, the FEMA Administrator may not award a grant in an amount that exceeds one percent of the available grant funds in such fiscal year, except where it is determined that such recipient has an extraordinary need for a grant in an amount that exceeds the one percent aggregate limit.
- In the case of a recipient that serves a jurisdiction with 100,000 people or fewer, the amount of available grant funds awarded to such recipient shall not exceed $1 million in any fiscal year.
- In the case of a recipient that serves a jurisdiction with more than 100,000 people, but not more than 500,000 people, the amount of available grant funds awarded to such recipient shall not exceed $2 million in any fiscal year.
- In the case of a recipient that serves a jurisdiction with more than 500,000, but not more than 1 million people, the amount of available grant funds awarded to such recipient shall not exceed $3 million in any fiscal year.
- In the case of a recipient that serves a jurisdiction with more than 1 million people but not more than 2.5 million people, the amount of available grant funds awarded to such recipient is subject to the one percent aggregate cap of $3.5 million for FY 2019, but FEMA may waive this aggregate cap in individual cases where FEMA determines that a recipient has an extraordinary need for a grant that exceeds the aggregate cap; if FEMA waives the aggregate cap, the amount of grant funds awarded to such recipient shall not exceed $6 million for any fiscal year.
- In the case of a recipient that serves a jurisdiction with more than 2.5 million people, the amount of available grant funds awarded to such recipient is subject to the one percent aggregate cap of $3.5 million for FY 2019, but FEMA may waive this aggregate cap in individual cases where FEMA determines that a recipient has an extraordinary need for a grant that exceeds the aggregate cap; if FEMA waives the aggregate cap, the amount of grant funds awarded to such recipient shall not exceed $9 million for any fiscal year.
- FEMA may not waive the population-based limits on the amount of grant funds awarded as set by 15 U.S.C. 2229(c)(2)(A).

The cumulative total of the Federal share of awards in Operations and Safety, Regional, and Vehicle Acquisition activities will be considered when assessing award amounts and any limitations thereto. Applicants may request funding up to the statutory limit on each of their applications.

For example, an applicant that serves a jurisdiction with more than 100,000 people, but not more than 500,000 people, may request up to $2 million on their Operations and Safety Application, and up to $2 million on their Vehicle Acquisition request. However, should both grants be awarded, the applicant would have to choose which award to accept if the cumulative value of both applications exceeds the statutory limits.

Cost Sharing and Maintenance of Effort

Grant recipients must share in the costs of the projects funded under this grant program as required by 15 U.S.C. 2229(k)(1) and in accordance with applicable Federal regulations at 2 CFR part 200, but they are not required to have the cost-share at the time of application nor at the time of award. However, before a grant is awarded, FEMA will contact potential awardees to determine whether the grant recipient has the funding in hand or if the grant recipient has a viable plan to obtain the funding necessary to fulfill the cost-sharing requirement.

In general, an eligible applicant seeking a grant shall agree to make available non-Federal funds equal to not less than 15 percent of the grant awarded. However, the cost share will vary as follows based on the size of the population served by the organization, with exceptions to this general requirement for entities serving smaller communities:

- Applicants that serve populations of 20,000 or less shall agree to make available non-Federal funds in an

amount equal to not less than 5 percent of the grant awarded.

- Applicants serving areas with populations above 20,000, but not more than 1 million, shall agree to make available non-Federal funds in an amount equal to not less than 10 percent of the grant awarded.
- Applicants serving areas with populations above 1 million shall agree to make available non-Federal funds in an amount equal to not less than 15 percent of the grant awarded.

The cost share for SFTAs will apply the requirements above based on the total population of the State.

The cost share for a regional application will apply the requirements above based on the aggregate population of the primary first due response areas of the host and participating partner organizations that execute a Memorandum of Understanding as described in Appendix B, Section J, Regional projects, of the FY 2019 AFG NOFO.

On a case-by-case basis, FEMA may allow a grant recipient that may already own assets (equipment or vehicles), acquired with non-Federal cash, to use the trade-in allowance/credit value of those assets as ''cash'' for the purpose of meeting the cost-share obligation of their AFG award. In-kind, cost-share matches are not allowed.

Grant recipients under this grant program must also agree to a maintenance of effort requirement as required by 15 U.S.C. 2229(k)(3) (referred to as a ''maintenance of expenditure'' requirement in that statute). A grant recipient shall agree to maintain during the term of the grant the recipient's aggregate expenditures relating to the activities allowable under the NOFO at not less than 80 percent of the average amount of such expenditures in the two fiscal years preceding the fiscal year in which the grant amounts are received.

In cases of demonstrated economic hardship, and at the request of the grant recipient, the Administrator of FEMA may waive or reduce a grant recipient's cost share requirement or maintenance of expenditure requirement. AFG applicants for FY 2019 must indicate at the time of application whether they are requesting a waiver and whether the waiver is for the cost share requirement, for the maintenance of effort requirement, or both. As required by statute, the Administrator of FEMA is required to establish guidelines for determining what constitutes economic hardship. FEMA has published these guidelines at FEMA's website: *https://www.fema.gov/media-library-data/1518026897046-483d76a37022b8a581ffb7d42fa9b17e/Eco_Hardship_Waiver_FPS_SAFER_AFG_IB_FINAL.pdf*.

Prior to the start of the FY 2019 AFG application period, FEMA conducted applicant workshops and/or internet webinars to inform potential applicants about the AFG Program. In addition, FEMA provided applicants with information at the AFG website: *https://www.fema.gov/welcome-assistance-firefighters-grant-program* to help them prepare quality grant applications. The AFG Help Desk is staffed throughout the application period to assist applicants with the automated application process as well as assistance with any questions.

Applicants can reach the AFG Help Desk through a toll-free telephone number during normal business hours (1–866–274–0960) or email to *firegrants@dhs.gov*.

Application Process

Organizations may submit one application per application period in each of the three AFG program activities (*e.g.,* one application for Operations and Safety, one for Vehicle Acquisition, and/or a separate application to be a Joint/Regional Project host). If an organization submits more than one application for any single AFG program activity (*e.g.,* two applications for Operations and Safety, two for Vehicles, etc.), either intentionally or unintentionally, both applications may be disqualified.

Applicants may access the grant application electronically at *https://portal.fema.gov*. The application is also accessible from the U.S. Fire Administration's website, *http://www.usfa.fema.gov,* and at *http://www.grants.gov*. New applicants must register and establish a user name and password for secure access to the grant application. Previous AFG grant applicants must use their previously established user name and passwords.

Applicants can answer questions about their grant request that reflect the AFG funding priorities, described below. In addition, each applicant must complete four separate narratives for each project or grant activity requested. Grant applicants will also provide relevant information about their organization's characteristics, call volume, and existing organizational capabilities.

System for Award Management (SAM)

Per 2 CFR 25.200, all Federal grant applicants and recipients must register in *https://SAM.gov*. SAM is the Federal Government's System for Awards Management, and registration is free of charge. Applicants must maintain current information in SAM that is consistent with the data provided in their AFG grant application and in the Dun & Bradstreet (DUNS) database. FEMA may not accept any application, process any awards, and consider any payment or amendment requests, unless the applicant or grant recipient has complied with the requirements to provide a valid DUNS number and an active SAM registration. The grant applicant's banking information, EIN, organization/entity name, address, and DUNS number must match the same information provided in SAM.

Criteria Development Panel (CDP) Recommendations

If there are any differences between the published AFG guidelines and the recommendations made by the CDP, FEMA must explain them and publish the information in the **Federal Register** prior to awarding any grant under the AFG Program. For FY 2019, FEMA accepted, and will implement, all but two of the CDP's recommendations for the prioritization of eligible activities.

Adopted Recommendations for FY 2019

The FY 2019 AFG NOFO contains some changes to definitions, descriptions, and priority categories. Changes to the FY 2019 AFG NOFO include:

- Under Micro Grants:
  - Wellness and Fitness is now eligible as a micro and regional grant.
  - Modifications to Facilities activities are now eligible as a micro grant.
- Under Equipment category:
  - Training 'props' are limited to $50,000 except for a State Fire Training Academy and Regional requests.
  - Learning Management Systems (LMS) to include software and computer programs for local departments and States to track training and certifications were added as high priority.
- Under Operation and Safety and Regional category:
  - Immediately Dangerous to Life or Health (IDLH), Protection for Fire Investigators (single-use respiratory protection) is added as high priority.
  - Definition of Primary First Due Response Area is updated to be consistent with National Fire Protection Association (NFPA) standard 1710 Current Edition. It is defined as the geographic area surrounding a fire station in which a company from that station is projected to be the first to arrive on the scene of an incident.
- Under Vehicle Acquisition:
  - Brush vehicles are now a high priority for urban, suburban, and rural communities. The only exception is for urban communities, a brush truck may

not exceed Type III in specifications. This does not preclude a department from applying for a Type I urban interface pumper. Type I pumpers should be requested as a pumper and specified in the request as Type I.

Recommendations Not Adopted for FY 2019

• The panel recommended that fire departments implement a requirement where NFPA standards listed as 1582 physicals become a requirement for all awards. FEMA recommends evaluating the impact of this requirement prior to implementation. It will not be considered during the application review.

• The panel recommended that FEMA adopt new definitions for career and combination departments to align with NFPA changes in the 1710 and 1720 standards. FEMA is unable to adopt this recommendation as it conflicts with statutory definitions.

Authority: 15 U.S.C. 2229.

Pete Gaynor,

Administrator, Federal Emergency Management Agency.

[FR Doc. 2020–04860 Filed 3–9–20; 8:45 am]

BILLING CODE 9111–64–P

DEPARTMENT OF HOMELAND SECURITY

[Docket No. DHS–2019–0033]

Privacy Act of 1974; System of Records

AGENCY: Privacy Office, Department of Homeland Security.

ACTION: Notice of modified Privacy Act System of Records.

SUMMARY: In accordance with the Privacy Act of 1974, the Department of Homeland Security (DHS) proposes to modify and reissue a current DHS system of records titled, ''Department of Homeland Security/ALL–038 Insider Threat Program System of Records.'' This system of records allows DHS to establish capabilities to detect, deter, and mitigate insider threats. An ''Insider'' is defined to include any person who has or who had authorized access to any DHS facility, information, equipment, network, or system. An ''insider threat'' is the threat that an insider will use his or her authorized access, wittingly or unwittingly, to do harm to the Department's mission, resources, personnel, facilities, information, equipment, networks, or systems. DHS will use the system to facilitate management of insider threat inquiries; identify potential threats to DHS resources and information assets; manage referrals of potential insider threats to and from internal and external partners; provide authorized assistance to lawful administrative, civil, counterintelligence, and criminal investigations; and provide statistical reports and meet other insider threat reporting requirements.

DATES: Submit comments on or before April 9, 2020. This modified system will be effective April 9, 2020.

ADDRESSES: You may submit comments, identified by docket number DHS–2019–0033 by one of the following methods:

• *Federal e-Rulemaking Portal: http://www.regulations.gov.* Follow the instructions for submitting comments.

• *Fax:* 202–343–4010.

• *Mail:* Jonathan R. Cantor, Acting Chief Privacy Officer, Privacy Office, Department of Homeland Security, Washington, DC 20528–0655.

Instructions: All submissions received must include the agency name and docket number DHS–2019–0033. All comments received will be posted without change to *http://www.regulations.gov,* including any personal information provided.

Docket: For access to the docket to read background documents or comments received, go to *http://www.regulations.gov.*

FOR FURTHER INFORMATION CONTACT: For general questions, please contact: Jonathan R. Cantor, (202) 343–1717, Acting Chief Privacy Officer, Privacy Office, Department of Homeland Security, Washington, DC 20528–0655.

SUPPLEMENTARY INFORMATION:

I. Background

In accordance with the Privacy Act of 1974, 5 U.S.C. 552a, Department of Homeland Security (DHS) proposes to modify and reissue a current DHS system of records titled, ''DHS/ALL–038 Insider Threat Program System of Records.''

DHS developed an Insider Threat Program (ITP) to manage insider threat matters within DHS. The ITP is mandated by Executive Order 13587, ''Structural Reforms to Improve the Security of Classified Networks and the Responsible Sharing and Safeguarding of Classified Information,'' issued October 7, 2011, which requires Federal agencies to establish an insider threat detection and prevention program to ensure the security of classified networks and the responsible sharing and safeguarding of classified information with appropriate protections for privacy and civil liberties.

DHS is modifying the Insider Threat Program System of Records to account for the new population affected and new types of information the program is now authorized to collect and maintain pursuant to a memorandum, *Expanding the Scope of the Department of Homeland Security Insider Threat Program,* submitted to the Secretary of Homeland Security on December 7, 2016, and approved on January 3, 2017. Originally, the Insider Threat Program focused on the detection, prevention, and mitigation of unauthorized disclosure of classified information by DHS personnel with active security clearances. The Secretary's memorandum expands the scope of the Insider Threat Program to its current breadth: threats posed to the Department by *all* individuals who have or had access to the Department's facilities, information, equipment, networks, or systems. Unauthorized disclosure of classified information is merely one way in which this threat might manifest. Therefore, the expanded scope increases the population covered by the system to include all those with past or current access to DHS facilities, information, equipment, networks, or systems.

Therefore, the Department is modifying the category of individuals covered under this SORN to *all* individuals who have or had access to the Department's facilities, information, equipment, networks, or systems.

The category of records in this SORN will be modified to cover records from any DHS Component, office, program, record, or source, including records from information security, personnel security, and systems security for both internal and external security threats. Information contained in such records is necessary to identify, analyze, or resolve insider threat matters. Moreover, the Insider Threat Program system of records may include information lawfully obtained from any United States Government Agency, DHS Component, other domestic or foreign government entity, and from a private sector entity. DHS is also updating Routine Use E and adding Routine Use F to comply with requirements set forth by OMB Memorandum M–17–12, ''Preparing for and Responding to a Breach of Personally Identifiable Information,'' (Jan. 3, 2017). Additionally, this notice includes non-substantive changes to simplify the formatting and text of the previously published notice.

Consistent with DHS's information sharing mission, information stored in the DHS/ALL–038 Insider Threat Program system of records may be

shared with other DHS components that have a need to know the information to carry out their national security, law enforcement, immigration, intelligence, or other homeland security functions. In addition, DHS may share information with appropriate federal, state, local, tribal, territorial, foreign, or international government agencies and private sector partners consistent with the routine uses set forth in this system of records notice.

Furthermore, DHS is issuing a Notice of Proposed Rulemaking to exempt this system of records from certain provisions of the Privacy Act elsewhere in the **Federal Register**. This modified system will be included in DHS's inventory of record systems.

II. Privacy Act

The Privacy Act embodies fair information practice principles in a statutory framework governing the means by which Federal Government agencies collect, maintain, use, and disseminate individuals' records. The Privacy Act applies to information that is maintained in a ''system of records.'' A ''system of records'' is a group of any records under the control of an agency from which information is retrieved by the name of an individual or by some identifying number, symbol, or other identifying particular assigned to the individual. In the Privacy Act, an individual is defined to encompass U.S. citizens and lawful permanent residents. Additionally, the Judicial Redress Act (JRA) provides covered persons with a statutory right to make requests for access and amendment to covered records, as defined by the JRA, along with judicial review for denials of such requests. In addition, the JRA prohibits disclosures of covered records, except as otherwise permitted by the Privacy Act.

Below is the description of the DHS/ALL–038 Insider Threat Program System of Records. In accordance with 5 U.S.C. 552a(r), DHS has provided a report of this system of records to the Office of Management and Budget and to Congress.

SYSTEM NAME AND NUMBER:

Department of Homeland Security (DHS) DHS/ALL–038 Insider Threat Program System of Records.

SECURITY CLASSIFICATION:

Unclassified and Classified.

SYSTEM LOCATION:

Records are maintained at several DHS Headquarters and Component locations in Washington, DC and field offices.

SYSTEM MANAGER(S):

Program Manager, Insider Threat Operations Center (202–447–5010), Office of the Chief Security Officer, Department of Homeland Security, Washington, DC 20528.

AUTHORITY FOR MAINTENANCE OF THE SYSTEM:

Intelligence Reform and Terrorism Prevention Act of 2004, Public Law 108–458; Intelligence Authorization Act for FY 2010, Public Law 111–259; Atomic Energy Act of 1954, 60 Stat. 755, August 1, 1946; Under Secretary for Management, Title 6 U.S.C. 341(a)(6); Investigation of Crimes Involving Government Officers and Employees, Title 28 U.S.C. 535; Law Enforcement Authority of Secretary of Homeland Security for Protection of Public Property, Title 40 U.S.C. 1315; Coordination of Counterintelligence Activities, Title 50 U.S.C. 3381; Executive Order 10450, Security Requirements for Government Employment, 18 FR 2489 (April 17, 1953); Executive Order 12333, United States Intelligence Activities, 46 FR 59941 (December 4, 1981), *reprinted as amended* in 73 FR 45325 (July 30, 2008); Executive Order 12829, National Industrial Security Program, 58 FR 3479 (January 06, 1993), *reprinted as amended in part* in 80 FR 60271 (September 30, 2015); Executive Order 12968, Access to Classified Information, 60 FR 40245 (August 2, 1995); Executive Order 13467, Reforming Processes Related to Suitability for Government Employment, Fitness for Contractor Employees, and Eligibility for Access to Classified National Security Information, 73 FR 38103 (June 30, 2008), *reprinted as amended in part* in 82 FR 8115 (January 17, 2017); Executive Order 13488, Granting Reciprocity on Excepted Service and Federal Contractor Employee Fitness and Reinvestigating Individuals in Positions of Public Trust, 74 FR 4111 (January 16, 2009), *reprinted as amended in part* in 82 FR 8115 (January 17, 2017); Executive Order 13526, Classified National Security Information, 75 FR 707 (December 29, 2009); Executive Order 13549, Classified National Security Information Programs for State, Local, Tribal, and Private Sector Entities, 75 FR 51609 (August 18, 2010), *reprinted as amended* in 80 FR 60271 (September 30, 2015); Executive Order 13587, Structural Reforms to Improve the Security of Classified Networks and the Responsible Sharing and Safeguarding of Classified Information, 76 FR 63811 (October 7, 2011); and Presidential Memorandum National Insider Threat Policy and Minimum Standards for Executive Branch Insider Threat Programs (November 21, 2012).

PURPOSE(S) OF THE SYSTEM:

The purpose of this system is to detect, deter, and mitigate insider threats. DHS will use the system to facilitate management of insider threat inquiries; identify and track potential insider threats to DHS; manage referrals of potential insider threats to and from internal and external partners; provide authorized assistance to lawful administrative, civil, counterintelligence, and criminal investigations; and generate statistical reports and meet other insider threat reporting requirements.

CATEGORIES OF INDIVIDUALS COVERED BY THE SYSTEM:

The categories of individuals covered by this system are DHS ''insiders,'' as defined above, which include present and former DHS employees, contractors, detailees, assignees, interns, visitors, and guests. In addition, persons who report concerns, witnesses, relatives, and individuals with other relevant personal associations with a DHS insider are covered by the system of records notice.

CATEGORIES OF RECORDS IN THE SYSTEM:

The system may collect the following types of information:

- Information potentially relevant to resolving possible insider threats and lawful DHS security investigations, including authorized physical, personnel, and communications security investigations, and information systems security analysis and reporting. Such information may include:
- Individual's name and alias(es);
- Date and place of birth;
- Social Security number;
- Address;
- Open source information, including publicly available social media information;
- Personal and official email addresses;
- Citizenship;
- Personal and official phone numbers;
- Driver license number(s);
- Vehicle Identification Number(s);
- License plate number(s);
- Ethnicity and race;
- Current Employment and Performance Information;
- Work history;
- Education history;
- Contract information;
- Information on family members, dependents, relatives and other personal associations;
- Passport number(s);

- DHS-held Travel records;
- Gender;
- Hair and eye color;
- Biometric data;
- Other physical or distinguishing attributes of an individual;
- Medical information;
- Access control pass, credential number, or other identifying number(s);
- Media obtained through authorized procedures, such as CCTV footage; and
- Any other information provided to obtain access to DHS facilities or information systems.
- Records relating to the management and operation of the DHS physical, personnel, and communications security programs, including:
- Completed standard form questionnaires issued by the Office of Personnel Management;
- Background investigative reports and supporting documentation, including criminal background, medical, and financial data;
- Current and former clearance status(s);
- Other information related to an individual's eligibility for access to classified information;
- Criminal history records;
- Polygraph examination results;
- Logs of computer activities on all DHS IT systems or any IT systems accessed by DHS personnel;
- Nondisclosure agreements;
- Document control registries;
- Courier authorization requests;
- Derivative classification unique identifiers;
- Requests for access to sensitive compartmented information (SCI);
- Records reflecting personal and official foreign travel;
- Facility access records;
- Records of contacts with foreign persons; and
- Briefing/debriefing statements for special programs, sensitive positions, and other related information and documents required in connection with personnel security clearance determinations.
- Reports of investigations or inquiries regarding security violations or misconduct, including:
- Individuals' statements or affidavits and correspondence;
- Incident reports;
- Drug test results;
- Investigative records of a criminal, civil, or administrative nature;
- Letters, emails, memoranda, and reports;
- Exhibits, evidence, statements, and affidavits;
- Inquiries relating to suspected security violations;
- Recommended remedial actions for possible security violations; and
- Personnel files containing information about misconduct and adverse actions.
- Any information related to the management and operation of the DHS ITP, including:
- Documentation pertaining to fact-finding or analytical efforts by ITP personnel to identify insider threats to DHS resources, personnel, property, facilities, or information;
- Records of information technology events and other information that could reveal potential insider threat activities;
- Intelligence reports and database query results relating to individuals covered by this system;
- Information obtained from the Intelligence Community, law enforcement partners, and from other agencies or organizations about individuals and/or organizations known or reasonably suspected of being engaged in conduct constituting, preparing for, aiding, or relating to an insider threat;
- Information provided by subjects and individual members of the public; and
- Information provided by individuals who report known or suspected insider threats.

RECORD SOURCE CATEGORIES:

Records are obtained from (1) software that monitors DHS users' activity on U.S. Government computer networks; (2) information supplied by individuals to the Department or by the individual's employer; (3) information provided to the Department to gain access to DHS facilities, information, equipment, networks, or systems; (4) publicly available information obtained from open source platforms, including publicly available social media; (5) any departmental records for which the ITP has been given authorized access; and (6) any federal, state, tribal, local government, or private sector records for which the ITP has been given authorized access. The Insider Threat Operations Center (ITOC) also receives tips and leads by other means, such as email or telephone. The ITOC may receive a tip from any party, including members of the public.

ROUTINE USES OF RECORDS MAINTAINED IN THE SYSTEM, INCLUDING CATEGORIES OF USERS AND PURPOSES OF SUCH USES:

In addition to those disclosures generally permitted under 5 U.S.C. 552a(b) of the Privacy Act, all or a portion of the records or information contained in this system may be disclosed outside DHS as a routine use pursuant to 5 U.S.C. 552a(b)(3) as follows:

A. To the Department of Justice (DOJ), including the U.S. Attorneys Offices, or other federal agency conducting litigation or proceedings before any court, adjudicative, or administrative body, when it is relevant or necessary to the litigation and one of the following is a party to the litigation or has an interest in such litigation:

1. DHS or any component thereof;
2. Any employee or former employee of DHS in his/her official capacity;
3. Any employee or former employee of DHS in his/her individual capacity, only when DOJ or DHS has agreed to represent the employee; or
4. The United States or any agency thereof.

B. To a congressional office from the record of an individual in response to an inquiry from that congressional office made at the request of the individual to whom the record pertains.

C. To the National Archives and Records Administration (NARA) or General Services Administration pursuant to records management inspections being conducted under the authority of 44 U.S.C. 2904 and 2906.

D. To an agency or organization for the purpose of performing audit or oversight operations as authorized by law, but only such information as is necessary and relevant to such audit or oversight function.

E. To appropriate agencies, entities, and persons when (1) DHS suspects or has confirmed that there has been a breach of the system of records; (2) DHS has determined that as a result of the suspected or confirmed breach there is a risk of harm to individuals, DHS (including its information systems, programs, and operations), the Federal Government, or national security; and (3) the disclosure made to such agencies, entities, and persons is reasonably necessary to assist in connection with DHS's efforts to respond to the suspected or confirmed breach or to prevent, minimize, or remedy such harm.

F. To another Federal agency or Federal entity, when DHS determines that information from this system of records is reasonably necessary to assist the recipient agency or entity in (1) responding to a suspected or confirmed breach or (2) preventing, minimizing, or remedying the risk of harm to individuals, the recipient agency or entity (including its information systems, programs, and operations), the Federal Government, or national security, resulting from a suspected or confirmed breach.

G. To an appropriate Federal, state, tribal, local, international, or foreign law enforcement agency or other appropriate

authority charged with investigating or prosecuting a violation or enforcing or implementing a law, rule, regulation, or order, when a record, either on its face or in conjunction with other information, indicates a violation or potential violation of law, which includes criminal, civil, or regulatory violations and such disclosure is proper and consistent with the official duties of the person making the disclosure.

H. To contractors and their agents, grantees, experts, consultants, and others performing or working on a contract, service, grant, cooperative agreement, or other assignment for DHS, when necessary to accomplish an agency function related to this system of records. Individuals provided information under this routine use are subject to the same Privacy Act requirements and limitations on disclosure as are applicable to DHS officers and employees.

I. To an appropriate Federal, state, local, tribal, territorial, foreign, or international agency, if the information is relevant and necessary to a requesting agency's decision concerning the hiring or retention of an individual, or issuance of a security clearance, license, contract, grant, delegation or designation of authority, or other benefit, or if the information is relevant and necessary to a DHS decision concerning the hiring or retention of an employee, the issuance of a security clearance, the reporting of an investigation of an employee, the letting of a contract, or the issuance of a license, grant, delegation or designation of authority, or other benefit and disclosure is appropriate to the proper performance of the official duties of the person making the request.

J. To a prospective or current employer that has, or is likely to have, access to any government facility, information, equipment, network, or system, to the extent necessary to determine the employment eligibility of an individual, based on actions taken by the Department pursuant to an insider threat inquiry involving the individual.

K. To third parties during the course of an investigation to the extent necessary to obtain information pertinent to the investigation, provided disclosure is appropriate to the proper performance of the official duties of the individual making the disclosure.

L. To a public or professional licensing organization when such information indicates, either by itself or in combination with other information, a violation or potential violation of professional standards, or reflects on the moral, educational, or professional qualifications of an individual who is licensed or who is seeking to become licensed.

M. To another federal agency in order to conduct or support authorized counterintelligence activities, as defined by 50 U.S.C. 3003(3).

N. To any Federal, state, local, tribal, territorial, foreign, or multinational government or agency, or appropriate private sector individuals and organizations lawfully engaged in national security or homeland defense for that entity's official responsibilities, including responsibilities to counter, deter, prevent, prepare for, respond to, threats to national or homeland security, including an act of terrorism or espionage.

O. To a Federal, state, local, tribal, or territorial government or agency lawfully engaged in the collection of intelligence (including national intelligence, foreign intelligence, and counterintelligence), counterterrorism, homeland security, law enforcement or law enforcement intelligence, and other information, when disclosure is undertaken for intelligence, counterterrorism, homeland security, or related law enforcement purposes, as authorized by U.S. Law or Executive Order.

P. To any individual, organization, or entity, as appropriate, to notify them of a serious threat to homeland security and/or a potential insider threat for the purpose of guarding them against or responding to such a threat, or when there is a reason to believe that the recipient is or could become the target of a particular threat, to the extent the information is relevant to the protection of life, health, or property.

Q. To members of the U.S. House Committee on Oversight and Reform and the Senate Homeland Security and Governmental Affairs Committee pursuant to a written request under 5 U.S.C. 2954, after consultation with the Chief Privacy Officer and the General Counsel.

R. To a federal agency or entity that has information relevant to an allegation or investigation regarding an insider threat for purposes of obtaining guidance, additional information, or advice from such federal agency or entity regarding the handling of an insider threat matter, or to a federal agency or entity that was consulted during the processing of the allegation or investigation but that did not ultimately have relevant information.

S. To a former DHS employee, DHS contractor, or individual sponsored by DHS for a security clearance for purposes of responding to an official inquiry by federal, state, local, tribal, or territorial government agencies or professional licensing authorities; or facilitating communications with a former employee that may be relevant and necessary for personnel-related or other official purposes when DHS requires information or consultation assistance from the former employee regarding a matter within that person's former area of responsibility.

T. To the news media and the public, with the approval of the Chief Privacy Officer in consultation with counsel, when there exists a legitimate public interest in the disclosure of the information, when disclosure is necessary to preserve confidence in the integrity of DHS, or when disclosure is necessary to demonstrate the accountability of DHS's officers, employees, or individuals covered by the system, except to the extent the Chief Privacy Officer determines that release of the specific information in the context of a particular case would constitute an unwarranted invasion of personal privacy.

POLICIES AND PRACTICES FOR STORAGE OF RECORDS:

DHS/ALL–038 Insider Threat Program stores records in this system electronically or on paper in secure facilities in a locked drawer behind a locked door. The records may be stored on magnetic disc, tape, and digital media.

POLICIES AND PRACTICES FOR RETRIEVAL OF RECORDS:

DHS may retrieve records by first and last name, Social Security number, date of birth, phone number, other unique individual identifiers, and other types of information by key word search.

POLICIES AND PRACTICES FOR RETENTION AND DISPOSAL OF RECORDS:

In accordance with General Records Schedule 5.6: Security Records (July 2017), Insider Threat (a) records pertaining to an ''insider threat inquiry'' are destroyed 25 years after the close of the inquiry; (b) records containing ''insider threat information'' are destroyed when 25 years old; (c) insider threat user activity monitoring (UAM) data is destroyed no sooner than 5 years after the inquiry has been opened, but longer retention is authorized if required for business use; and (d) insider threat administrative and operations records are destroyed when 7 years old.

ADMINISTRATIVE, TECHNICAL, AND PHYSICAL SAFEGUARDS:

DHS ITP safeguards records in this system according to applicable rules and policies, including all applicable DHS automated systems security and

access policies. DHS has imposed strict controls to minimize the risk of compromising the information that is being stored. Access to the computer system containing the records in this system is limited to those individuals who have a need to know the information for the performance of their official duties and who have appropriate clearances or permissions.

RECORD ACCESS PROCEDURES:

As described below, this system of records is exempt from the notification, access, and amendment provisions of the Privacy Act, and the Judicial Redress Act if applicable. However, DHS will consider individual requests to determine whether or not information may be released. Individuals seeking access to and notification of any record contained in this system of records, or seeking to contest its content, may submit a request in writing to the Chief Privacy Officer and Headquarters FOIA Officer, whose contact information can be found at *http://www.dhs.gov/foia* under ''Contacts Information.'' If an individual believes more than one component maintains Privacy Act records concerning him or her, the individual may submit the request to the Chief Privacy Officer and Chief Freedom of Information Act Officer, Department of Homeland Security, Washington, DC 20528–0655. Even if neither the Privacy Act nor the Judicial Redress Act provides a right of access, certain records about you may be available under the Freedom of Information Act.

When an individual is seeking records about himself or herself from this system of records or any other Departmental system of records, the individual's request must conform with the Privacy Act regulations set forth in 6 CFR part 5. The individual must first verify his/her identity, meaning that the individual must provide his/her full name, current address, and date and place of birth. The individual must sign the request, and the individual's signature must either be notarized or submitted under Title 28 U.S.C. 1746, a law that permits statements to be made under penalty of perjury as a substitute for notarization. While no specific form is required, an individual may obtain forms for this purpose from the Chief Privacy Officer and Chief Freedom of Information Act Officer, *http://www.dhs.gov/foia* or 1–866–431–0486. In addition, the individual should:

- Explain why he or she believes the Department would have information being requested;
- Identify which component(s) of the Department he or she believes may have the information;
- Specify when the individual believes the records would have been created; and
- Provide any other information that will help the FOIA staff determine which DHS component agency may have responsive records;

If the request is seeking records pertaining to another living individual, the request must include an authorization from the individual whose record is being requested, authorizing the release to the requester.

Without the above information, the component(s) may not be able to conduct an effective search, and the individual's request may be denied due to lack of specificity or lack of compliance with applicable regulations.

CONTESTING RECORD PROCEDURES:

For records covered by the Privacy Act or Judicial Redress Act-covered records, individuals may make a request for amendment or correction of a record of the Department about the individual by writing directly to the Department component that maintains the record. The request should identify each particular record in question, state the amendment or correction desired, and state why the individual believes that the record is not accurate, relevant, timely, or complete. The individual may submit any documentation that would be helpful. If the individual believes that the same record is in more than one system of records, the request should state that and be addressed to each component that maintains a system of records containing the record.

NOTIFICATION PROCEDURES:

See ''Record Access Procedures'' above.

EXEMPTIONS PROMULGATED FOR THE SYSTEM:

The Secretary of Homeland Security, pursuant to 5 U.S.C. 552a(j)(2) has exempted this system from the following provisions of the Privacy Act: 5 U.S.C. 552a(c)(3), (c)(4); (d); (e)(1), (e)(2), (e)(3), (e)(4)(G), (e)(4)(H), (e)(4)(I), (e)(5), (e)(8), (e)(12); (f); and (g)(1). Additionally, the Secretary of Homeland Security, pursuant to 5 U.S.C. 552a(k)(1), (k)(2), and (k)(5), has exempted this system from the following provisions of the Privacy Act, 5 U.S.C. 552a(c)(3); (d); (e)(1), (e)(4)(G), (e)(4)(H), (e)(4)(I); and (f). When this system receives a record from another system exempted in that source system under Title 5 U.S.C. 552a(j)(2), 5 U.S.C. 552a(k)(1), (k)(2), and (k)(5), DHS will claim the same exemptions for those records that are claimed for the original primary systems of records from which they originated and claims any additional exemptions set forth here.

HISTORY:

81 FR 9871 (February 26, 2016).

Jonathan R. Cantor,

Acting Chief Privacy Officer, Department of Homeland Security.

[FR Doc. 2020–04795 Filed 3–9–20; 8:45 am]

BILLING CODE 9110–9B–P

DEPARTMENT OF THE INTERIOR

Bureau of Land Management

[LLAK940000.L14100000. BX0000.20X.LXSS001L0100]

Filing of Plats of Survey: Alaska

AGENCY: Bureau of Land Management, Interior.

ACTION: Notice of official filing.

SUMMARY: The plats of survey of lands described in this notice are scheduled to be officially filed in the Bureau of Land Management (BLM), Alaska State Office, Anchorage, Alaska. These surveys were executed at the request of the Bering Straits Native Corporation, Kootznoowoo, Incorporated, and the BLM, are necessary for the management of these lands.

DATES: The BLM must receive protests by April 9, 2020.

ADDRESSES: You may buy a copy of the plats from the BLM Alaska Public Information Center, 222 W. 7th Avenue, Mailstop 13, Anchorage, AK 99513. Please use this address when filing written protests. You may also view the plats at the BLM Alaska Public Information Center, Fitzgerald Federal Building, 222 W. 8th Avenue, Anchorage, Alaska, at no cost.

FOR FURTHER INFORMATION CONTACT: Douglas N. Haywood, Chief, Branch of Cadastral Survey, Alaska State Office, Bureau of Land Management, 222 W. 7th Avenue, Anchorage, AK 99513; 907–271–5481; *dhaywood@blm.gov.* People who use a telecommunications device for the deaf may call the Federal Relay Service (FRS) at 1–800–877–8339 to contact the BLM during normal business hours. The FRS is available 24 hours a day, 7 days a week, to leave a message or question with the above individual. You will receive a reply during normal business hours.

SUPPLEMENTARY INFORMATION: The lands surveyed are:

Copper River Meridian, Alaska

T. 4 N., R. 1 W., accepted February 25, 2020

U.S. Survey No. 5, accepted February 13, 2020, situated within:
T. 51 S., R. 68 E.

Kateel River Meridian, Alaska

T. 11 S., R. 12 E., accepted February 13, 2020

U.S. Survey No. 14458, accepted February 21, 2020, situated within:

Tps. 24, 25, and 26 S., R. 13 W.,
Tps. 23 and 24 S., R. 14 W.

Fairbanks Meridian, Alaska

T. 7 N., R. 14 E., officially filed October 1, 1991, Correction of Field Notes, dated February 21, 2020.

Seward Meridian, Alaska

T. 1 N., R. 54 W., accepted February 12, 2020
T. 1 N., R. 55 W., accepted February 12, 2020
T. 1 S., R. 54 W., accepted February 12, 2020
T. 1 S., R. 55 W., accepted February 19, 2020
T. 3 S., R. 57 W., accepted February 11, 2020

T. 1 N., R. 73 W., officially filed October 11, 1996, Correction of Survey Plat, dated February 18, 2020.

T. 2 N., R. 75 W., officially filed October 11, 1996, Correction of Survey Plat, dated February 13, 2020.

T. 2 N., R. 75 W., officially filed December 16, 1998, Correction of Photogrammetric Resurvey and Segregation Survey Plat, dated February 14, 2020.

T. 3 N., R. 72 W., officially filed October 11, 1996, Correction of Survey Plat, dated February 13, 2020.

T. 49 S., R. 78 W., officially filed October 12, 1982, Amended Field Notes, dated February 21, 2020.

U.S. Survey No. 8211, officially filed October 17, 1986, Correction of Field Notes, dated February 21, 2020, situated within: T. 1 N., R. 74 W.

U.S. Survey No. 8236, officially filed October 17, 1986, Correction of Survey Plat, dated February 13, 2020, situated within: T. 2 N., R. 73 W.

U.S. Survey No. 8237, officially filed October 17, 1986, Correction of Survey Plat, dated February 13, 2020, situated within: T. 2 N., R. 73 W.

U.S. Survey No. 8243, officially filed October 17, 1986, Correction of Field Notes, dated February 18, 2020, situated within: T. 2 N., R. 73 W.

U.S. Survey No. 8492, officially filed October 17, 1986, Correction of Field Notes, dated February 19, 2020, situated within T. 1 N., R. 74 W.

A person or party who wishes to protest one or more plats of survey identified above must file a written notice of protest with the State Director for the BLM in Alaska. The notice of protest must identify the plat(s) of survey that the person or party wishes to protest. You must file the notice of protest before the scheduled date of official filing for the plat(s) of survey being protested. The BLM will not consider any notice of protest filed after the scheduled date of official filing. A notice of protest is considered filed on the date it is received by the State Director for the BLM in Alaska during regular business hours; if received after regular business hours, a notice of protest will be considered filed the next business day. A written statement of reasons in support of a protest, if not filed with the notice of protest, must be filed with the State Director for the BLM in Alaska within 30 calendar days after the notice of protest is filed.

If a notice of protest against a plat of survey is received prior to the scheduled date of official filing, the official filing of the plat of survey identified in the notice of protest will be stayed pending consideration of the protest. A plat of survey will not be officially filed until the dismissal or resolution of all protests of the plat.

Before including your address, phone number, email address, or other personally identifiable information in a notice of protest or statement of reasons, you should be aware that the documents you submit, including your personally identifiable information, may be made publicly available in their entirety at any time. While you can ask the BLM to withhold your personally identifiable information from public review, we cannot guarantee that we will be able to do so.

Authority: 43 U.S.C. Chap. 3.

Douglas N. Haywood,
Chief Cadastral Surveyor, Alaska.

[FR Doc. 2020–04882 Filed 3–9–20; 8:45 am]
BILLING CODE 4310–JA–P

DEPARTMENT OF THE INTERIOR

Bureau of Land Management

[LLCOS01000.L51100000.GA0000. LVEMC18CC400.20X]

Notice of Federal Competitive Coal Lease Sale, Application COC–78825, Dunn Ranch Tract, Colorado

AGENCY: Bureau of Land Management, Interior.

ACTION: Notice of coal lease sale.

SUMMARY: Notice is hereby given that the coal resources in the lands described below in La Plata County, Colorado, will be offered for competitive sale by sealed bid, in accordance with the Mineral Leasing Act of 1920, as amended.

DATES: The lease sale will be held at 10 a.m. on April 10, 2020. Sealed bids must be received by the Bureau of Land Management (BLM) Colorado State Office Public Room on or before 9:30 a.m. on April 10, 2020.

ADDRESSES: The lease sale will be held in the 4th floor conference room of the BLM Colorado State Office, 2850 Youngfield Street, Lakewood, CO 80215. Sealed bids must be submitted to the Public Room, BLM Colorado State Office, at this same address.

FOR FURTHER INFORMATION CONTACT: Doug Siple, Mining Engineer, at 303–239–3774 or *dsiple@blm.gov*. Persons who use a telecommunications device for the deaf (TDD) may call the Federal Relay Service (FRS) at 1–800–877–8339 to contact Mr. Siple during normal business hours. The FRS is available 24 hours a day, 7 days a week, to leave a message or question. You will receive a reply during normal business hours.

SUPPLEMENTARY INFORMATION: This sale is being held in response to a lease by application (LBA) filed by GCC Energy, LLC (GCCE). These lands, known as the Dunn Ranch Tract (Tract), are located in La Plata County, Colorado, southwest of Hesperus, Colorado. The Federal coal resources to be offered are located in the following described lands:

New Mexico Principal Meridian, Colorado

T. 35 N., R. 11 W.,
sec. 18, lots 2 thru 5, 8, 9, and 10, SE¼NW¼, and NE¼SW¼;
sec. 19, lots 1, 2, 6, and 7, NE¼NW¼, and N½SE¼NW¼.

T. 35 N., R. 12 W.,
sec. 13, S½NE¼, SE¼NW¼, S½SW¼, NE¼SE¼, and S½SE¼;
sec. 14, S½NE¼SW¼, S½NW¼SW¼, S½SW¼, S½NW¼SE¼, and S½SE¼;
sec. 15, SE¼SW¼ and S½SE¼;
sec. 22, N½NE¼, N½SW¼NE¼, SE¼SW¼NE¼, SE¼NE¼, E½NE¼NW¼, NE¼SE¼NW¼, and E½NW¼SE¼;
sec. 23, N½NE¼, SE¼NE¼, N½NW¼, SE¼SW¼, and SE¼;
sec. 24, N½, SW¼, and NW¼SE¼;
sec. 26, N½NE¼NE¼, SW¼NE¼NE¼, NW¼NE¼, N½NW¼, N½SW¼NW¼, SE¼SW¼NW¼, and SE¼NW¼;
sec. 27, NE¼NE¼ and SE¼NW¼NE¼.

The area described contains 2,462.07 acres.

The coal in the Tract has one minable coal bed, which is designated as the Upper Menefee coal seam. This seam is approximately 8.4 feet thick. The Tract is adjacent to GCCE's King II Mine and contains approximately 9.54 million tons of recoverable high-volatile bituminous coal. The coal quality in the Upper Menefee coal seam is as follows:

British Thermal Unit (BTU) ...	12,700 BTU/lb
Moisture	6.24%
Sulfur Content	0.89%
Ash Content	7.04%

The Tract will be leased to the qualified bidder of the highest cash amount, provided that the high bid meets or exceeds the BLM's estimate of the fair market value (FMV) of the Tract. The minimum bid for the Tract is $100 per acre or fraction thereof. The minimum bid is not intended to

represent FMV. The authorized officer will determine if the bids meet FMV after the sale.

The sealed bids should be sent by certified mail, return receipt requested, or be hand delivered to the Public Room, BLM Colorado State Office (see **ADDRESSES**), and clearly marked ''Sealed Bid for COC–78825 Coal Sale—Not to be opened before 10 a.m. on April 10, 2020.'' The Public Room representative will issue a receipt for each hand-delivered bid. Bids received after 9:30 a.m. will not be considered. If identical high bids are received, the tying high bidders will be requested to submit follow-up sealed bids until a high bid is received. All tie-breaking sealed bids must be submitted within 15 minutes following the sale official's announcement at the sale that identical high bids have been received.

Prior to lease issuance, the high bidder, if other than the applicant, must pay the BLM the cost recovery fee in the amount of $117,668.15, in addition to all processing costs the BLM incurs after the date of this sale notice (43 CFR 3473.2(f)).

A lease issued as a result of this offering will require payment of an annual rental of $3 per acre, or fraction thereof, and a royalty payable to the United States of 8 percent of the value of coal mined by underground methods.

Bidding instructions for the Tract offered and the terms and conditions of the proposed coal lease are included in the Detailed Statement of Lease Sale, with copies available at the BLM Colorado State Office (see **ADDRESSES**). Documents for case file COC–78825 are available for public inspection at the BLM Colorado State Office Public Room.

(Authority: 43 CFR 3422.3–2)

Gregory P. Shoop,

Colorado Associate State Director.

[FR Doc. 2020–04847 Filed 3–9–20; 8:45 am]

BILLING CODE 4310–JB–P

DEPARTMENT OF THE INTERIOR

National Park Service

[NPS–WASO–NRNHL–DTS#–29926; PPWOCRADI0, PCU00RP14.R50000]

National Register of Historic Places; Notification of Pending Nominations and Related Actions

AGENCY: National Park Service, Interior.

ACTION: Notice.

SUMMARY: The National Park Service is soliciting comments on the significance of properties nominated before February 22, 2020, for listing or related actions in the National Register of Historic Places.

DATES: Comments should be submitted by March 25, 2020.

ADDRESSES: Comments may be sent via U.S. Postal Service and all other carriers to the National Register of Historic Places, National Park Service, 1849 C St. NW, MS 7228, Washington, DC 20240.

SUPPLEMENTARY INFORMATION: The properties listed in this notice are being considered for listing or related actions in the National Register of Historic Places. Nominations for their consideration were received by the National Park Service before February 22, 2020. Pursuant to Section 60.13 of 36 CFR part 60, written comments are being accepted concerning the significance of the nominated properties under the National Register criteria for evaluation.

Before including your address, phone number, email address, or other personal identifying information in your comment, you should be aware that your entire comment—including your personal identifying information—may be made publicly available at any time. While you can ask us in your comment to withhold your personal identifying information from public review, we cannot guarantee that we will be able to do so.

Nominations submitted by State or Tribal Historic Preservation Officers:

CALIFORNIA

Los Angeles County

Descanso Gardens, 1418 Descanso Dr., La Cañada Flintridge, SG100005157

Riverside County

Miller, Grace Lewis, House, 2311 North Indian Canyon Dr., Palm Springs, SG100005158

MONTANA

Lewis and Clark County

Quinn's Garage, 206 Main St., Augusta, SG100005163

NEW HAMPSHIRE

Cheshire County

Faulkner & Colony Woolen Mill, 222 West St., Keene, SG100005161

Grafton County

Lyme-East Thetford Bridge, VT 113/East Thetford Rd. over the Connecticut R., Lyme, SG100005159

Rockingham County

Kensington Social Library, 126 Amesbury Rd., Kensington, SG100005160

Old Deerfield Center Historic District

51, 58, 68, 70 Church St.; 23 Lang Rd.; 49, 51, 53 Meetinghouse Hill Rd.; 8, 20, 24, Mt. Delight Rd.; Cemetery, north side of Meetinghouse Hill Rd., Deerfield, SG100005162

NEW JERSEY

Cumberland County

Siloam Cemetery, 550 North Valley Ave., Vineland, SG100005155

RHODE ISLAND

Providence County

First Universalist Church, 78 Earle St., Woonsocket, SG100005156

VERMONT

Orange County

Lyme-East Thetford Bridge, VT 113/East Thetford Rd. over the Connecticut R., Thetford, SG100005159

Additional documentation has been received for the following resource:

OREGON

Multnomah County

Ladd's Addition Historic District, Bounded by SE Division, Hawthorne, Twelfth, and Twentieth Sts., Portland, AD88001310

(Authority: Section 60.13 of 36 CFR part 60)

Dated: February 24, 2020.

Julie H. Ernstein,

Supervisory Archeologist, National Register of Historic Places/National Historic Landmarks Program.

[FR Doc. 2020–04803 Filed 3–9–20; 8:45 am]

BILLING CODE 4312–52–P

DEPARTMENT OF THE INTERIOR

Office of Surface Mining Reclamation and Enforcement

[S1D1S SS08011000 SX064A000 201S180110; S2D2S SS08011000 SX064A000 20XS501520; OMB Control Number 1029–0055]

Agency Information Collection Activities; Rights of Entry

AGENCY: Office of Surface Mining Reclamation and Enforcement, Interior.

ACTION: Notice of information collection; request for comment.

SUMMARY: In accordance with the Paperwork Reduction Act of 1995, we, the Office of Surface Mining Reclamation and Enforcement (OSMRE), are proposing to renew an information collection.

DATES: Interested persons are invited to submit comments on or before May 11, 2020.

ADDRESSES: Send your comments on this information collection request (ICR) by mail to the Mark Gehlhar, Office of Surface Mining Reclamation and Enforcement, 1849 C Street NW, Room 4556–MIB, Washington, DC 20240; or by email to *mgehlhar@osmre.gov.* Please

reference OMB Control Number 1029–0055 in the subject line of your comments.

FOR FURTHER INFORMATION CONTACT: To request additional information about this ICR, contact Mark Gehlhar by email at *mgehlhar@osmre.gov,* or by telephone at 202–208–2716.

SUPPLEMENTARY INFORMATION: In accordance with the Paperwork Reduction Act of 1995, we provide the general public and other Federal agencies with an opportunity to comment on new, proposed, revised, and continuing collections of information. This helps us assess the impact of our information collection requirements and minimize the public's reporting burden. It also helps the public understand our information collection requirements and provide the requested data in the desired format.

We are soliciting comments on the proposed ICR that is described below. We are especially interested in public comment addressing the following issues: (1) Is the collection necessary to the proper functions of the OSMRE; (2) will this information be processed and used in a timely manner; (3) is the estimate of burden accurate; (4) how might the OSMRE enhance the quality, utility, and clarity of the information to be collected; and (5) how might the OSMRE minimize the burden of this collection on the respondents, including through the use of information technology.

Comments that you submit in response to this notice are a matter of public record. We will include or summarize each comment in our request to OMB to approve this ICR. Before including your address, phone number, email address, or other personal identifying information in your comment, you should be aware that your entire comment—including your personal identifying information—may be made publicly available at any time. While you can ask us in your comment to withhold your personal identifying information from public review, we cannot guarantee that we will be able to do so.

Abstract: This regulation establishes procedures for non-consensual entry upon private lands for the purpose of abandoned mine land reclamation activities or exploratory studies when the landowner refuses consent or is not available.

Title of Collection: Rights of Entry.

OMB Control Number: 1029–0055.

Form Number: None.

Type of Review: Extension of a currently approved collection.

Respondents/Affected Public: State and Tribal abandoned mine land reclamation agencies.

Total Estimated Number of Annual Respondents: 28.

Total Estimated Number of Annual Responses: 336.

Estimated Completion Time per Response: 7.5 hours.

Total Estimated Number of Annual Burden Hours: 2,520.

Respondent's Obligation: Retain a Benefit.

Frequency of Collection: Annually.

Total Estimated Annual Nonhour Burden Cost: None.

An agency may not conduct or sponsor and a person is not required to respond to a collection of information unless it displays a currently valid OMB control number.

The authority for this action is the Paperwork Reduction Act of 1995 (44 U.S.C. 3501 *et seq.*).

Mark J. Gehlhar,

Information Collection Clearance Officer, Division of Regulatory Support.

[FR Doc. 2020–04813 Filed 3–9–20; 8:45 am]

BILLING CODE 4310–05–P

DEPARTMENT OF THE INTERIOR

Office of Surface Mining Reclamation and Enforcement

[S1D1S SS08011000 SX064A000 201S180110; S2D2S SS08011000 SX064A000 20XS501520; OMB Control Number 1029–0067]

Agency Information Collection Activities; Restrictions on Financial Interests of State Employees

AGENCY: Office of Surface Mining Reclamation and Enforcement, Interior.

ACTION: Notice of Information Collection; request for comment.

SUMMARY: In accordance with the Paperwork Reduction Act of 1995, we, the Office of Surface Mining Reclamation and Enforcement (OSMRE), are proposing to renew an information collection.

DATES: Interested persons are invited to submit comments on or before May 11, 2020.

ADDRESSES: Send your comments on this information collection request (ICR) by mail to the Mark Gehlhar, Office of Surface Mining Reclamation and Enforcement, 1849 C Street NW, Room 4556–MIB, Washington, DC 20240; or by email to *mgehlhar@osmre.gov.* Please reference OMB Control Number 1029–0067 in the subject line of your comments.

FOR FURTHER INFORMATION CONTACT: To request additional information about this ICR, contact Mark Gehlhar by email at *mgehlhar@osmre.gov,* or by telephone at 202–208–2716.

SUPPLEMENTARY INFORMATION: In accordance with the Paperwork Reduction Act of 1995, we provide the general public and other Federal agencies with an opportunity to comment on new, proposed, revised, and continuing collections of information. This helps us assess the impact of our information collection requirements and minimize the public's reporting burden. It also helps the public understand our information collection requirements and provide the requested data in the desired format.

We are soliciting comments on the proposed ICR that is described below. We are especially interested in public comment addressing the following issues: (1) Is the collection necessary to the proper functions of the OSMRE; (2) will this information be processed and used in a timely manner; (3) is the estimate of burden accurate; (4) how might the OSMRE enhance the quality, utility, and clarity of the information to be collected; and (5) how might the OSMRE minimize the burden of this collection on the respondents, including through the use of information technology.

Comments that you submit in response to this notice are a matter of public record. We will include or summarize each comment in our request to OMB to approve this ICR. Before including your address, phone number, email address, or other personal identifying information in your comment, you should be aware that your entire comment—including your personal identifying information—may be made publicly available at any time. While you can ask us in your comment to withhold your personal identifying information from public review, we cannot guarantee that we will be able to do so.

Abstract: Respondents are state employees who supply information on employment and financial interests. The purpose of the collection is to ensure compliance with section 517(g) of the Surface Mining Control and Reclamation Act of 1977, which places an absolute prohibition on having a direct or indirect financial interest in underground or surface coal mining operations.

Title of Collection: Restrictions on financial interests of state employees.

OMB Control Number: 1029–0067.

Form Number: None.

Type of Review: Extension of a currently approved collection.

Respondents/Affected Public: Any state regulatory authority employee or member of advisory boards or commissions established in accordance with state law or regulation to represent multiple interests who performs any function or duty under the Surface Mining Control and Reclamation Act.

Total Estimated Number of Annual Respondents: 2,496.

Total Estimated Number of Annual Responses: 5,016.

Estimated Completion Time per Response: Varies from 5 minutes to 30 minutes, depending on activity.

Total Estimated Number of Annual Burden Hours: 428.

Respondent's Obligation: Retain a Benefit.

Frequency of Collection: Annually.

Total Estimated Annual Nonhour Burden Cost: None.

An agency may not conduct or sponsor and a person is not required to respond to a collection of information unless it displays a currently valid OMB control number.

The authority for this action is the Paperwork Reduction Act of 1995 (44 U.S.C. 3501 *et seq*).

Mark J. Gehlhar,

Information Collection Clearance Officer, Division of Regulatory Support.

[FR Doc. 2020–04812 Filed 3–9–20; 8:45 am]

BILLING CODE 4310–05–P

DEPARTMENT OF THE INTERIOR

Office of Surface Mining Reclamation and Enforcement

[S1D1S SS08011000 SX064A000 201S180110; S2D2S SS08011000 SX064A000 20XS501520; OMB Control Number 1029–0114]

Technical Evaluations Series

AGENCY: Office of Surface Mining Reclamation and Enforcement, Interior.

ACTION: Notice of Information Collection; request for comment.

SUMMARY: In accordance with the Paperwork Reduction Act of 1995, we, the Office of Surface Mining Reclamation and Enforcement (OSMRE), are proposing to renew an information collection.

DATES: Interested persons are invited to submit comments on or before May 11, 2020.

ADDRESSES: Send your comments on this information collection request (ICR) by mail to the Mark Gehlhar, Office of Surface Mining Reclamation and Enforcement, 1849 C Street NW, Room 4556–MIB, Washington, DC 20240; or by email to *mgehlhar@osmre.gov.* Please reference OMB Control Number 1029–0114 in the subject line of your comments.

FOR FURTHER INFORMATION CONTACT: To request additional information about this ICR, contact Mark Gehlhar by email at *mgehlhar@osmre.gov,* or by telephone at 202–208–2716.

SUPPLEMENTARY INFORMATION: In accordance with the Paperwork Reduction Act of 1995, we provide the general public and other Federal agencies with an opportunity to comment on new, proposed, revised, and continuing collections of information. This helps us assess the impact of our information collection requirements and minimize the public's reporting burden. It also helps the public understand our information collection requirements and provide the requested data in the desired format.

We are soliciting comments on the proposed ICR that is described below. We are especially interested in public comment addressing the following issues: (1) Is the collection necessary to the proper functions of the OSMRE; (2) will this information be processed and used in a timely manner; (3) is the estimate of burden accurate; (4) how might the OSMRE enhance the quality, utility, and clarity of the information to be collected; and (5) how might the OSMRE minimize the burden of this collection on the respondents, including through the use of information technology.

Comments that you submit in response to this notice are a matter of public record. We will include or summarize each comment in our request to OMB to approve this ICR. Before including your address, phone number, email address, or other personal identifying information in your comment, you should be aware that your entire comment—including your personal identifying information—may be made publicly available at any time. While you can ask us in your comment to withhold your personal identifying information from public review, we cannot guarantee that we will be able to do so.

Abstract: This series of surveys is needed to ensure that technical assistance activities, technology transfer activities and technical forums are useful for those who participate or receive the assistance. Specifically, representatives from State and Tribal regulatory and reclamation authorities, representatives of industry, environmental or citizen groups, or the public, are the recipients of the assistance or participants in these forums. These surveys will be the primary means through which OSMRE evaluates its performance in meeting the performance goals outlined in its annual plans developed pursuant to the Government Performance and Results Act.

Title of Collection: Technical Evaluations Series.

OMB Control Number: 1029–0114.

Form Number: None.

Type of Review: Extension of a currently approved collection.

Respondents/Affected Public: Individuals who request information or assistance, although generally States and Tribal employees.

Total Estimated Number of Annual Respondents: 106.

Total Estimated Number of Annual Responses: 106.

Estimated Completion Time per Response: 5 minutes.

Total Estimated Number of Annual Burden Hours: 9.

Respondent's Obligation: Retain a Benefit.

Frequency of Collection: Annually.

Total Estimated Annual Nonhour Burden Cost: None.

An agency may not conduct or sponsor and a person is not required to respond to a collection of information unless it displays a currently valid OMB control number.

The authority for this action is the Paperwork Reduction Act of 1995 (44 U.S.C. 3501 *et seq*).

Mark J. Gehlhar,

Information Collection Clearance Officer, Division of Regulatory Support.

[FR Doc. 2020–04811 Filed 3–9–20; 8:45 am]

BILLING CODE 4310–05–P

INTERNATIONAL TRADE COMMISSION

[Investigation No. 731–TA–1474 (Preliminary)]

Ultra-High Molecular Weight Polyethylene From Korea; Institution of Anti-Dumping Duty Investigation and Scheduling of Preliminary Phase Investigations

AGENCY: United States International Trade Commission.

ACTION: Notice.

SUMMARY: The Commission hereby gives notice of the institution of an investigation and commencement of preliminary phase antidumping duty investigation No. 731–TA–1474 (Preliminary) pursuant to the Tariff Act of 1930 (''the Act'') to determine whether there is a reasonable indication

that an industry in the United States is materially injured or threatened with material injury, or the establishment of an industry in the United States is materially retarded, by reason of imports of ultra-high molecular weight polyethylene from Korea, provided for in subheadings 3901.10.10 and 3901.20.10 of the Harmonized Tariff Schedule of the United States, that are alleged to be sold in the United States at less than fair value. Unless the Department of Commerce (''Commerce'') extends the time for initiation, the Commission must reach a preliminary determination in antidumping duty investigations in 45 days, or in this case by April 20, 2020. The Commission's views must be transmitted to Commerce within five business days thereafter, or by April 27, 2020.

DATES: March 4, 2020.

FOR FURTHER INFORMATION CONTACT: Andres Andrade (202) 205–2078, Office of Investigations, U.S. International Trade Commission, 500 E Street SW, Washington, DC 20436. Hearing-impaired persons can obtain information on this matter by contacting the Commission's TDD terminal on 202–205–1810. Persons with mobility impairments who will need special assistance in gaining access to the Commission should contact the Office of the Secretary at 202–205–2000. General information concerning the Commission may also be obtained by accessing its internet server (*https://www.usitc.gov*). The public record for this investigation may be viewed on the Commission's electronic docket (EDIS) at *https://edis.usitc.gov.*

SUPPLEMENTARY INFORMATION:

Background.—This investigation is being instituted, pursuant to section 733(a) of the Tariff Act of 1930 (19 U.S.C. 1673b(a)), in response to a petition filed on March 4, 2020, by Celanese Corporation, Irving, Texas.

For further information concerning the conduct of this investigation and rules of general application, consult the Commission's Rules of Practice and Procedure, part 201, subparts A and B (19 CFR part 201), and part 207, subparts A and B (19 CFR part 207).

Participation in the investigation and public service list.—Persons (other than petitioners) wishing to participate in the investigation as parties must file an entry of appearance with the Secretary to the Commission, as provided in sections 201.11 and 207.10 of the Commission's rules, not later than seven days after publication of this notice in the **Federal Register**. Industrial users and (if the merchandise under investigation is sold at the retail level) representative consumer organizations have the right to appear as parties in Commission antidumping duty investigations. The Secretary will prepare a public service list containing the names and addresses of all persons, or their representatives, who are parties to this investigation upon the expiration of the period for filing entries of appearance.

Limited disclosure of business proprietary information (BPI) under an administrative protective order (APO) and BPI service list.—Pursuant to section 207.7(a) of the Commission's rules, the Secretary will make BPI gathered in this investigation available to authorized applicants representing interested parties (as defined in 19 U.S.C. 1677(9)) who are parties to the investigation under the APO issued in the investigation, provided that the application is made not later than seven days after the publication of this notice in the **Federal Register**. A separate service list will be maintained by the Secretary for those parties authorized to receive BPI under the APO.

Conference.—The Commission's Director of Investigations has scheduled a conference in connection with this investigation for 9:30 a.m. on Tuesday, March 24, 2020, at the U.S. International Trade Commission Building, 500 E Street SW, Washington, DC. Requests to appear at the conference should be emailed to *preliminaryconferences@usitc.gov* (DO NOT FILE ON EDIS) on or before Friday, March 20, 2020. Parties in support of the imposition of antidumping duties in this investigation and parties in opposition to the imposition of such duties will each be collectively allocated one hour within which to make an oral presentation at the conference. A nonparty who has testimony that may aid the Commission's deliberations may request permission to present a short statement at the conference.

Written submissions.—As provided in sections 201.8 and 207.15 of the Commission's rules, any person may submit to the Commission on or before March 27, 2020, a written brief containing information and arguments pertinent to the subject matter of the investigation. Parties may file written testimony in connection with their presentation at the conference. All written submissions must conform with the provisions of section 201.8 of the Commission's rules; any submissions that contain BPI must also conform with the requirements of sections 201.6, 207.3, and 207.7 of the Commission's rules. The Commission's *Handbook on Filing Procedures,* available on the Commission's website at *https://www.usitc.gov/documents/handbook_on_filing_procedures.pdf,* elaborates upon the Commission's procedures with respect to filings.

In accordance with sections 201.16(c) and 207.3 of the rules, each document filed by a party to the investigation must be served on all other parties to the investigation (as identified by either the public or BPI service list), and a certificate of service must be timely filed. The Secretary will not accept a document for filing without a certificate of service.

Certification.—Pursuant to section 207.3 of the Commission's rules, any person submitting information to the Commission in connection with these investigations must certify that the information is accurate and complete to the best of the submitter's knowledge. In making the certification, the submitter will acknowledge that any information that it submits to the Commission during these investigations may be disclosed to and used: (i) By the Commission, its employees and Offices, and contract personnel (a) for developing or maintaining the records of these or related investigations or reviews, or (b) in internal investigations, audits, reviews, and evaluations relating to the programs, personnel, and operations of the Commission including under 5 U.S.C. Appendix 3; or (ii) by U.S. government employees and contract personnel, solely for cybersecurity purposes. All contract personnel will sign appropriate nondisclosure agreements.

Authority: This investigation is being conducted under authority of title VII of the Tariff Act of 1930; this notice is published pursuant to section 207.12 of the Commission's rules.

By order of the Commission.

Issued: March 5, 2020.

William Bishop,

Supervisory Hearings and Information Officer.

[FR Doc. 2020–04830 Filed 3–9–20; 8:45 am]

BILLING CODE 7020–02–P

JUDICIAL CONFERENCE OF THE UNITED STATES

Advisory Committee on Evidence Rules; Meeting of the Judicial Conference

AGENCY: Judicial Conference of the United States, Advisory Committee on Evidence Rules.

ACTION: Notice of open meeting.

SUMMARY: The Advisory Committee on Evidence Rules will hold a meeting on

May 8, 2020. The meeting will be open to public observation but not participation. An agenda and supporting materials will be posted at least 7 days in advance of the meeting at: *http://www.uscourts.gov/rules-policies/records-and-archives-rules-committees/agenda-books.*

DATES: May 8, 2020.

Time: 9 a.m. 5 p.m.

ADDRESSES: Administrative Office of the U.S. Courts, One Columbus Circle NE, Washington, DC 20544.

FOR FURTHER INFORMATION CONTACT: Rebecca A. Womeldorf, Secretary, Committee on Rules of Practice and Procedure of the Judicial Conference of the United States, Thurgood Marshall Federal Judiciary Building, One Columbus Circle NE, Suite 7–300, Washington, DC 20544, Telephone (202) 502–1820.

Authority: 28 U.S.C. 2073.

Dated: March 5, 2020.

Rebecca A. Womeldorf,

Secretary, Committee on Rules of Practice and Procedure,Judicial Conference of the United States.

[FR Doc. 2020–04893 Filed 3–9–20; 8:45 am]

BILLING CODE 2210–55–P

JUDICIAL CONFERENCE OF THE UNITED STATES

Advisory Committee on Criminal Rules; Meeting of the Judicial Conference

AGENCY: Judicial Conference of the United States, Advisory Committee on Criminal Rules.

ACTION: Notice of open meeting.

SUMMARY: The Advisory Committee on Criminal Rules will hold a meeting on May 5, 2020. The meeting will be open to public observation but not participation. An agenda and supporting materials will be posted at least 7 days in advance of the meeting at: *http://www.uscourts.gov/rules-policies/records-and-archives-rules-committees/agenda-books.*

DATES: May 5, 2020.

Time: 9 a.m.–5 p.m.

ADDRESSES: The Morrison House, 116 S Alfred Street, Alexandria, VA 22314.

FOR FURTHER INFORMATION CONTACT: Rebecca A. Womeldorf, Secretary, Committee on Rules of Practice and Procedure of the Judicial Conference of the United States, Thurgood Marshall Federal Judiciary Building, One Columbus Circle NE, Suite 7–300, Washington, DC 20544, Telephone (202) 502–1820.

Authority: 28 U.S.C. 2073.

Dated: March 5, 2020.

Rebecca A. Womeldorf,

Secretary, Committee on Rules of Practice and Procedure, Judicial Conference of the United States.

[FR Doc. 2020–04892 Filed 3–9–20; 8:45 am]

BILLING CODE 2210–55–P

DEPARTMENT OF JUSTICE

Bureau of Alcohol, Tobacco, Firearms and Explosives

[OMB Number 1140–0016]

Agency Information Collection Activities; Proposed eCollection eComments Requested; Extension Without Change of a Currently Approved Collection; Application for Registration of Firearms Acquired by Certain Governmental Entities—ATF F 10 (5320.10)

AGENCY: Bureau of Alcohol, Tobacco, Firearms and Explosives, Department of Justice.

ACTION: 60-Day notice.

SUMMARY: The Department of Justice (DOJ), Bureau of Alcohol, Tobacco, Firearms and Explosives (ATF), will submit the following information collection request to the Office of Management and Budget (OMB) for review and approval in accordance with the Paperwork Reduction Act of 1995.

DATES: Comments are encouraged and will be accepted for 60 days until May 11, 2020.

FOR FURTHER INFORMATION CONTACT: If you have additional comments, regarding the estimated public burden or associated response time, suggestions, or need a copy of the proposed information collection instrument with instructions, or additional information, please contact: James Chancey, National Firearms Act Division either by mail at 244 Needy Road, Martinsburg, WV 25405, by email at *nfaombcomments@atf.gov,* or by telephone at 304–616–4500.

SUPPLEMENTARY INFORMATION: Written comments and suggestions from the public and affected agencies concerning the proposed collection of information are encouraged. Your comments should address one or more of the following four points:

Evaluate whether the proposed collection of information is necessary for the proper performance of the functions of the agency, including whether the information will have practical utility;

Evaluate the accuracy of the agency's estimate of the burden of the proposed collection of information, including the validity of the methodology and assumptions used;

Evaluate whether and if so how the quality, utility, and clarity of the information to be collected can be enhanced; and

Minimize the burden of the collection of information on those who are to respond, including through the use of appropriate automated, electronic, mechanical, or other technological collection techniques or other forms of information technology, *e.g.,* permitting electronic submission of responses.

Overview of this information collection:

1. *Type of Information Collection (check justification or form 83):* Extension without change of a currently approved collection.

2. *The Title of the Form/Collection:* Application for Registration of Firearms Acquired by Certain Governmental Entities.

3. *The agency form number, if any, and the applicable component of the Department sponsoring the collection:*

Form number (if applicable): ATF Form 10 (5320.10).

Component: Bureau of Alcohol, Tobacco, Firearms and Explosives, U.S. Department of Justice.

4. *Affected public who will be asked or required to respond, as well as a brief abstract:*

Primary: Federal Government.

Other (if applicable): State, Local, and Tribal Government.

Abstract: State and local government agencies will use the Application for Registration of Firearms Acquired by Certain Governmental Entities—ATF Form 10 (5320.10) to register an otherwise unregisterable National Firearms Act (NFA). The NFA requires the registration of certain firearms under Federal Law. The Form 10 registration allows State and local agencies to comply with the NFA, and retain and use firearms that would otherwise have to be destroyed.

5. *An estimate of the total number of respondents and the amount of time estimated for an average respondent to respond:* An estimated 318 respondents will utilize the form annually, and it will take each respondent approximately 30 minutes to complete the responses.

6. *An estimate of the total public burden (in hours) associated with the collection:* The estimated annual public burden associated with this collection is 159 hours, which is equal to 318 (total respondents) *.5 (30 minutes or time/per response)

7. *An Explanation of the Change in Estimates:* The adjustment associated with this IC is a reduction in the total respondents and responses for this IC by 1,189, since the last renewal in 2017. Consequently, the total burden hours and costs for this IC has also reduced by 595 hours and $713 respectively, since 2017.

If additional information is required contact: Melody Braswell, Department Clearance Officer, United States Department of Justice, Justice Management Division, Policy and Planning Staff, Two Constitution Square, 145 N Street NE, 3E.405A, Washington, DC 20530.

Dated: March 5, 2020.

Melody Braswell,

Department Clearance Officer for PRA, U.S. Department of Justice.

[FR Doc. 2020–04887 Filed 3–9–20; 8:45 am]

BILLING CODE 4410–18–P

DEPARTMENT OF JUSTICE

Bureau of Alcohol, Tobacco, Firearms and Explosives

[OMB Number 1140–0032]

Agency Information Collection Activities; Proposed eCollection eComments Requested; Extension Without Change of a Currently Approved Collection Records of Acquisition and Disposition, Collectors of Firearms

AGENCY: Bureau of Alcohol, Tobacco, Firearms and Explosives, Department of Justice.

ACTION: 60-Day notice.

SUMMARY: The Department of Justice (DOJ), Bureau of Alcohol, Tobacco, Firearms and Explosives (ATF), will submit the following information collection request to the Office of Management and Budget (OMB) for review and approval in accordance with the Paperwork Reduction Act of 1995.

DATES: Comments are encouraged and will be accepted for 60 days until May 11, 2020.

FOR FURTHER INFORMATION CONTACT: If you have additional comments, regarding the estimated public burden or associated response time, suggestions, or need additional information, please contact: Andrew Perdas, Firearms Industry Programs Branch (FIPB) either by mail at Bureau of Alcohol, Tobacco, Firearms and Explosives, 99 New York Ave. NE, Washington, DC 20226, by email at *fipb-informationcollection@atf.gov,* or by telephone at 202–648–0890.

SUPPLEMENTARY INFORMATION: Written comments and suggestions from the public and affected agencies concerning the proposed collection of information are encouraged. Your comments should address one or more of the following four points:

— Evaluate whether the proposed collection of information is necessary for the proper performance of the functions of the agency, including whether the information will have practical utility;

— Evaluate the accuracy of the agency's estimate of the burden of the proposed collection of information, including the validity of the methodology and assumptions used;

— Evaluate whether and if so how the quality, utility, and clarity of the information to be collected can be enhanced; and

—Minimize the burden of the collection of information on those who are to respond, including through the use of appropriate automated, electronic, mechanical, or other technological collection techniques or other forms of information technology, *e.g.,* permitting electronic submission of responses.

Overview of This Information Collection

1. *Type of Information Collection (check justification or form 83):* Extension without change of a currently approved collection.

2. *The Title of the Form/Collection:* Records of Acquisition and Disposition, Collectors of Firearms.

3. *The agency form number, if any, and the applicable component of the Department sponsoring the collection:*

Form number (if applicable): None.

Component: Bureau of Alcohol, Tobacco, Firearms and Explosives, U.S. Department of Justice.

4. *Affected public who will be asked or required to respond, as well as a brief abstract:*

Primary: Individuals or households.

Other (if applicable): Business or other for-profit.

Abstract: The recordkeeping requirement for this collection is primarily to facilitate ATF's authority to inquire into the disposition of any firearm during the course of a criminal investigation.

5. *An estimate of the total number of respondents and the amount of time estimated for an average respondent to respond:* An estimated 51,976 respondents will responds to this information collection annually, and it will take each respondent approximately 3.05 hours to complete their responses.

6. *An estimate of the total public burden (in hours) associated with the collection:* The estimated annual total public burden hours associated with this collection is 158,527, which is equal to 155,928 hours (total time to prepare all inspection reports) + 2,599 hours (total time to create/maintain all record).

7. *An Explanation of the Change in Estimates:* The adjustments associated with this IC include a decrease in number of respondents (collector licensees) and responses by 4,952, since the last renewal in 2017. Consequently, the total annual burden hours for this IC has also reduced by 12,257.

If additional information is required contact: Melody Braswell, Department Clearance Officer, United States Department of Justice, Justice Management Division, Policy and Planning Staff, Two Constitution Square, 145 N Street NE, 3E.405A, Washington, DC 20530.

Dated: March 5, 2020.

Melody Braswell,

Department Clearance Officer for PRA, U.S. Department of Justice.

[FR Doc. 2020–04888 Filed 3–9–20; 8:45 am]

BILLING CODE 4410–18–P

DEPARTMENT OF JUSTICE

Bureau of Alcohol, Tobacco, Firearms and Explosives

[OMB Number 1140–0012]

Agency Information Collection Activities; Proposed eCollection eComments Requested; Extension Without Change of a Currently Approved Collection; Notice of Firearms Manufactured or Imported—ATF Form 2 (5320.2)

AGENCY: Bureau of Alcohol, Tobacco, Firearms and Explosives, Department of Justice.

ACTION: 60-Day notice.

SUMMARY: The Department of Justice (DOJ), Bureau of Alcohol, Tobacco, Firearms and Explosives (ATF), will submit the following information collection request to the Office of Management and Budget (OMB) for review and approval in accordance with the Paperwork Reduction Act of 1995.

DATES: Comments are encouraged and will be accepted for 60 days until May 11, 2020.

FOR FURTHER INFORMATION CONTACT: If you have additional comments, regarding the estimated public burden or associated response time, suggestions, or need a copy of the

proposed information collection instrument with instructions, or additional information, please contact: James Chancey, National Firearms Act Division either by mail at 244 Needy Road, Martinsburg, WV 25405, by email at *nfaombcomments@atf.gov,* or by telephone at 304–616–4500.

SUPPLEMENTARY INFORMATION: Written comments and suggestions from the public and affected agencies concerning the proposed collection of information are encouraged. Your comments should address one or more of the following four points:

—Evaluate whether the proposed collection of information is necessary for the proper performance of the functions of the agency, including whether the information will have practical utility;
—Evaluate the accuracy of the agency's estimate of the burden of the proposed collection of information, including the validity of the methodology and assumptions used;
—Evaluate whether and if so how the quality, utility, and clarity of the information to be collected can be enhanced; and
—Minimize the burden of the collection of information on those who are to respond, including through the use of appropriate automated, electronic, mechanical, or other technological collection techniques or other forms of information technology, *e.g.,* permitting electronic submission of responses.

Overview of This Information Collection

1. *Type of Information Collection (check justification or form 83):* Extension without change of a currently approved collection.

2. *The Title of the Form/Collection:* Notice of Firearms Manufactured or Imported.

3. *The agency form number, if any, and the applicable component of the Department sponsoring the collection:* Form number (if applicable): ATF Form 2 (5320.2).

Component: Bureau of Alcohol, Tobacco, Firearms and Explosives, U.S. Department of Justice.

4. *Affected public who will be asked or required to respond, as well as a brief abstract:* Primary: Business or other for-profit Other (if applicable): Federal Government, and State, Local or Tribal Government.

Abstract: The Notice of Firearms Manufactured or Imported—ATF Form 2 (5320.2) is required of (1) a person who is qualified to manufacture National Firearms Act (NFA) firearms, or (2) a person who is qualified to import NFA firearms to register manufactured or imported NFA firearm(s).

5. *An estimate of the total number of respondents and the amount of time estimated for an average respondent to respond:* An estimated 4,212 respondents will utilize the form approximately 3.415 times annually, and it will take each respondent 30 minutes to complete their responses.

6. *An estimate of the total public burden (in hours) associated with the collection:* The estimated annual public burden associated with this collection is 7,192 hours, which is equal to 4,212 (total respondents) * 3.415 (# of responses per respondent) * .5 (30 minutes).

7. *An Explanation of the Change in Estimates:* The adjustments associated with this collection includes a decrease in both the number of respondents and responses for this IC by 340 and 1,161 respectively, since the last renewal in 2017. Due to less respondents, both the hourly and total public cost burden have also reduced by 581 hours and $ 697, since 2017.

If additional information is required contact: Melody Braswell, Department Clearance Officer, United States Department of Justice, Justice Management Division, Policy and Planning Staff, Two Constitution Square, 145 N Street NE, 3E.405A, Washington, DC 20530.

Dated: March 5, 2020.

Melody Braswell,

Department Clearance Officer for PRA, U.S. Department of Justice.

[FR Doc. 2020–04890 Filed 3–9–20; 8:45 am]

BILLING CODE 4410–18–P

DEPARTMENT OF JUSTICE

Bureau of Alcohol, Tobacco, Firearms and Explosives

[OMB Number 1140–0097]

Agency Information Collection Activities; Proposed eCollection eComments Requested; Extension Without Change of a Currently Approved Collection; Supplemental Information on Water Quality Considerations—ATF Form 5000.30

AGENCY: Bureau of Alcohol, Tobacco, Firearms and Explosives, Department of Justice.

ACTION: 60-Day notice.

SUMMARY: The Department of Justice (DOJ), Bureau of Alcohol, Tobacco, Firearms and Explosives (ATF), will submit the following information collection request to the Office of Management and Budget (OMB) for review and approval in accordance with the Paperwork Reduction Act of 1995.

DATES: Comments are encouraged and will be accepted for 60 days until May 11, 2020.

FOR FURTHER INFORMATION CONTACT: If you have additional comments, regarding the estimated public burden, response time, suggestions, or need a copy of the proposed information collection instrument with instructions, or additional information, please contact: Shawn Stevens, Federal Explosives Licensing Center, either by mail at 244 Needy Road, Martinsburg, WV 25405, by email at *Shawn.Stevens@atf.gov,* or by telephone at 304–616–4400.

SUPPLEMENTARY INFORMATION: Written comments and suggestions from the public and affected agencies concerning the proposed collection of information are encouraged. Your comments should address one or more of the following four points:

—Evaluate whether the proposed collection of information is necessary for the proper performance of the functions of the agency, including whether the information will have practical utility;
—Evaluate the accuracy of the agency's estimate of the burden of the proposed collection of information, including the validity of the methodology and assumptions used;
—Evaluate whether and if so how the quality, utility, and clarity of the information to be collected can be enhanced; and
—Minimize the burden of the collection of information on those who are to respond, including through the use of appropriate automated, electronic, mechanical, or other technological collection techniques or other forms of information technology, *e.g.,* permitting electronic submission of responses.

Overview of This Information Collection

1. *Type of Information Collection (check justification or form 83):* Extension without Change of a currently approved collection.

2. *The Title of the Form/Collection:* Supplemental Information on Water Quality Considerations.

3. *The agency form number, if any, and the applicable component of the Department sponsoring the collection:*

Form number (if applicable): ATF Form 5000.30.

Component: Bureau of Alcohol, Tobacco, Firearms and Explosives, U.S. Department of Justice.

4. *Affected public who will be asked or required to respond, as well as a brief abstract:*

Primary: Business or other for-profit.

Other (if applicable): None.

Abstract: A person engaged in the business of manufacturing explosives is required to have a license under the provisions of 18 U.S.C. 843. The Federal Water Pollution Control Act, 33 U.S.C. 1341, authorizes the execution of the Supplemental Information on Water Quality Considerations—ATF 5000.30, during the application process, in order to ensure compliance with the Act.

5. *An estimate of the total number of respondents and the amount of time estimated for an average respondent to respond:* An estimated 680 respondents will utilize the form annually, and it will take each respondent approximately 30 minutes to complete their responses.

6. *An estimate of the total public burden (in hours) associated with the collection:* The estimated annual public burden associated with this collection is 340 hours, which is equal to 680 (# of respondents) *.5 (30 minutes).

If additional information is required contact: Melody Braswell, Department Clearance Officer, United States Department of Justice, Justice Management Division, Policy and Planning Staff, Two Constitution Square, 145 N Street NE, 3E.405A, Washington, DC 20530.

Dated: March 5, 2020.

Melody Braswell,

Department Clearance Officer for PRA,U.S. Department of Justice.

[FR Doc. 2020–04889 Filed 3–9–20; 8:45 am]

BILLING CODE 4410–18–P

DEPARTMENT OF JUSTICE

Drug Enforcement Administration

[Docket No. DEA 577]

Importer of Controlled Substances Application: Caligor Pharma Services

ACTION: Notice of application.

DATES: Registered bulk manufacturers of the affected basic class(es), and applicants therefore, may file written comments on or objections to the issuance of the proposed registration on or before April 9, 2020. Such persons may also file a written request for a hearing on the application on or before April 9, 2020.

ADDRESSES: Written comments should be sent to: Drug Enforcement Administration, Attention: DEA **Federal Register** Representative/DPW, 8701 Morrissette Drive, Springfield, Virginia 22152. All requests for a hearing must be sent to: Drug Enforcement Administration, Attn: Administrator, 8701 Morrissette Drive, Springfield, Virginia 22152. All requests for a hearing should also be sent to: (1) Drug Enforcement Administration, Attn: Hearing Clerk/OALJ, 8701 Morrissette Drive, Springfield, Virginia 22152; and (2) Drug Enforcement Administration, Attn: DEA **Federal Register** Representative/DPW, 8701 Morrissette Drive, Springfield, Virginia 22152.

SUPPLEMENTARY INFORMATION: In accordance with 21 CFR 1301.34(a), this is notice that on September 6, 2019, Caligor Coghlan Pharma Services, 1500 Business Park Drive, Unit B, Bastrop, Texas 78602, applied to be registered as an importer of the following basic class(es) of controlled substance:

Controlled substance	Drug code	Schedule
Tapentadol	9780	II

The company plans to import the listed controlled substance in finished dosage form to be used in pediatric clinical trials. No other activity for this drug code is authorized for this registration. Approval of permit applications will occur only when the registrant's business activity is consistent with what is authorized under 21 U.S.C. 952(a)(2). Authorization will not be extended to the import of FDA approved or non-approved finished dosage forms for commercial use.

Dated: February 11, 2020.

William T. McDermott,

Assistant Administrator.

[FR Doc. 2020–04835 Filed 3–9–20; 8:45 am]

BILLING CODE 4410–09–P

DEPARTMENT OF JUSTICE

Drug Enforcement Administration

[Docket No. DEA–599]

Importer of Controlled Substances Application: SpecGx LLC

ACTION: Notice of application.

DATES: Registered bulk manufacturers of the affected basic class(es), and applicants therefore, may file written comments on or objections to the issuance of the proposed registration on or before April 9, 2020. Such persons may also file a written request for a hearing on the application on or before April 9, 2020.

ADDRESSES: Written comments should be sent to: Drug Enforcement Administration, Attention: DEA **Federal Register** Representative/DPW, 8701 Morrissette Drive, Springfield, Virginia 22152. All requests for a hearing must be sent to: Drug Enforcement Administration, Attn: Administrator, 8701 Morrissette Drive, Springfield, Virginia 22152. All request for a hearing should also be sent to: (1) Drug Enforcement Administration, Attn: Hearing Clerk/OALJ, 8701 Morrissette Drive, Springfield, Virginia 22152; and (2) Drug Enforcement Administration, Attn: DEA **Federal Register** Representative/DPW, 8701 Morrissette Drive, Springfield, Virginia 22152.

SUPPLEMENTARY INFORMATION: In accordance with 21 CFR 1301.34(a), this is notice that on December 30, 2019, SpecGx LLC, 3600 North Second Street, Saint Louis, Missouri 63147 applied to be registered as an importer of the following basic class(es) of controlled substances:

Controlled substance	Drug code	Schedule
Marihuana	7360	I
Phenylacetone ..	8501	II
Coca Leaves	9040	II
Thebaine	9333	II
Opium, raw	9600	II
Poppy Straw Concentrate.	9670	II
Tapentadol	9780	II

The company plans to import the listed controlled substances for bulk manufacture into Active Pharmaceutical Ingredients (API) for distribution to its customers. In reference to drug code 7360 (marihuana), the company plans to import synthetic cannabinol. No other activity for this drug is authorized for this registration. Placement of these codes onto the company's registration does not translate into automatic approval of subsequent permit applications to import controlled substances.

Approval of permit applications will occur only when the registrant's business activity is consistent with what is authorized under 21 U.S.C. 952(a)(2).

Authorization will not extend the import of FDA approved or non-approved finished forms for commercial sale.

Dated: February 27, 2020.

William T. McDermott,

Assistant Administrator.

[FR Doc. 2020–04834 Filed 3–9–20; 8:45 am]

BILLING CODE 4410–09–P

DEPARTMENT OF JUSTICE

Drug Enforcement Administration

[Docket No. DEA–579]

Bulk Manufacturer of Controlled Substances Application: Sigma Aldrich Research

ACTION: Notice of application.

DATES: Registered bulk manufacturers of the affected basic classes, and applicants therefore, may file written comments on or objections to the issuance of the proposed registration on or before May 11, 2020.

ADDRESSES: Written comments should be sent to: Drug Enforcement Administration, Attention: DEA Federal Register Representative/DPW, 8701 Morrissette Drive, Springfield, Virginia 22152.

SUPPLEMENTARY INFORMATION: In accordance with 21 CFR 1301.33(a), this is notice that on December 13, 2019, Sigma Aldrich Research, Biochemicals, Inc., 400–600 Summit Drive, Burlington, Massachusetts 01803 applied to be registered as a bulk manufacturer of the following basic class(es) of controlled substances:

Controlled substance	Drug code	Schedule
Cathinone	1235	I
Mephedrone (4-Methyl-N-methylcathinone)	1248	I
Lysergic acid diethylamide	7315	I
Tetrahydrocannabinols	7370	I
3,4-Methylenedioxymethamphetamine	7405	I
Alpha-methyltryptamine	7432	I
Dimethyltryptamine	7435	I
5-Methoxy-N,N-diisopropyltryptamine	7439	I
N-Benzylpiperazine	7493	I
2-(2,5-Dimethoxyphenyl) ethanamine (2C-H)	7517	I
MDPV (3,4-Methylenedioxypyrovalerone)	7535	I
Methylone (3,4-Methylenedioxy-N-methylcathinone)	7540	I
Heroin	9200	I
Normorphine	9313	I
Norlevorphanol	9634	I
Amphetamine	1100	II
Nabilone	7379	II
Phencyclidine	7471	II
Cocaine	9041	II
Codeine	9050	II
Ecgonine	9180	II
Levorphanol	9220	II
Meperidine	9230	II
Methadone	9250	II
Morphine	9300	II
Thebaine	9333	II
Levo-alphacetylmethadol	9648	II
Noroxymorphone	9668	II
Remifentanil	9739	II
Sufentanil	9740	II
Carfentanil	9743	II
Fentanyl	9801	II

The company plans to manufacture small quantities of the listed controlled substances to make reference standards for distribution to its customers.

Dated: February 10, 2020.

William T. McDermott,

Assistant Administrator.

[FR Doc. 2020–04831 Filed 3–9–20; 8:45 am]

BILLING CODE 4410–09–P

DEPARTMENT OF JUSTICE

Drug Enforcement Administration

[Docket No. DEA–583]

Bulk Manufacturer of Controlled Substances Application: Siemens Healthcare Diagnostics Inc.

ACTION: Notice of application.

DATES: Registered bulk manufacturers of the affected basic classes, and applicants therefore, may file written comments on or objections to the issuance of the proposed registration on or before May 11, 2020.

ADDRESSES: Written comments should be sent to: Drug Enforcement Administration, Attention: DEA Federal Register Representative/DPW, 8701 Morrissette Drive, Springfield, Virginia 22152.

SUPPLEMENTARY INFORMATION: In accordance with 21 CFR 1301.33(a), this is notice that on December 10, 2019, Siemens Healthcare Diagnostics Inc., 100 GBC Drive, Mailstop 514, Newark, Delaware 19702–2461 applied to be registered as a bulk manufacturer of the following basic classes of controlled substances:

Controlled substance	Drug code	Schedule
Ecgonine	9180	II

The company plans to produce the listed controlled substance in bulk to be used in the manufacture of DEA exempt products.

Dated: February 11, 2020.

William T. McDermott,

Assistant Administrator.

[FR Doc. 2020–04832 Filed 3–9–20; 8:45 am]

BILLING CODE 4410–09–P

DEPARTMENT OF JUSTICE

Drug Enforcement Administration

[Docket No. 19–21]

William S. Husel, D.O.; Decision and Order

On April 9, 2019, the Assistant Administrator, Diversion Control Division, Drug Enforcement Administration (hereinafter, Government), issued an Order to Show Cause (hereinafter, OSC) to William S. Husel, D.O. (hereinafter, Respondent) of Columbus, Ohio. OSC, at 1. The OSC proposed the revocation of Respondent's Certificate of Registration No. FH4036667. It alleged that Respondent is without ''authority to handle controlled substances in the State of Ohio, the state in which [Respondent is] registered with the DEA.'' *Id.* at 2 (citing 21 U.S.C. 824(a)(3)).

Specifically, the OSC alleged that the State Medical Board of Ohio (hereinafter, Board) summarily suspended Respondent's certificate to practice osteopathic medicine and surgery on January 25, 2019. *Id.* at 2.

The OSC notified Respondent of the right to request a hearing on the allegations or to submit a written statement while waiving the right to a hearing, the procedures for electing each option, and the consequences for failing to elect either option. *Id.* (citing 21 CFR 1301.43). The OSC also notified Respondent of the opportunity to submit a corrective action plan. OSC, at 1, 3 (citing 21 U.S.C. 824(c)(2)(C)).

Respondent, through his counsel, timely requested a hearing via an email dated April 30, 2019.[1] Hearing Request, at 1. In his hearing request, Respondent admitted that his Ohio Medical License was summarily suspended on January 25, 2019, and stated that he was preparing for his hearing before the State Medical Board of Ohio. *Id.* He also stated that ''he ha[d] not prescribed any controlled substances while on suspension.'' *Id.*

The Office of Administrative Law Judges (hereinafter, OALJ) put the matter on the docket and assigned it to Administrative Law Judge Charles Dorman (hereinafter, ALJ). The ALJ issued a briefing schedule to both parties on May 1, 2019, directing the Government ''to file evidence to support its allegation that Respondent lacks state authority to handle controlled substances, or any other grounds upon which it seeks summary disposition,'' and any motion for summary disposition, by May 15, 2019. Briefing Schedule for Lack of State Authority Allegations (hereinafter, Briefing Order), at 1. The ALJ directed that ''if the Government files a motion for summary disposition, Respondent's reply is due on May 29, 2019.'' *Id.* The ALJ also noted that Respondent's counsel's email address was included in Respondent's Hearing Request, and provided instructions in the event Respondent's counsel declined to participate in future electronic receipt of orders from the OALJ. *Id.* at 2.

The Government timely complied with the Briefing Order by filing a Motion for Summary Disposition on May 15, 2019. Government's Motion for Summary Disposition (hereinafter, MSD). In its MSD, the Government stated that Respondent ''lacks authority to handle controlled substances in the State of Ohio, the jurisdiction where he is licensed to practice osteopathic medicine and where he is registered with DEA, because his osteopathic medical license is suspended,'' and therefore, he ''does not have state authority to prescribe, administer, or dispense controlled substances in the State of Ohio.'' *Id.* at 3. Thus, the Government contends, ''Respondent is not authorized to possess a DEA registration'' in Ohio. *Id.* In support of its assertion, the Government provided a copy of the Board's ''Entry of Order'' (hereinafter, Order) dated January 25, 2019, which ordered that ''effective immediately,'' Respondent's ''certificate . . . to practice osteopathic medicine and surgery in the State of Ohio be summarily suspended,'' and that Respondent ''shall immediately cease the practice of osteopathic medicine and surgery in Ohio.'' MSD, Exhibit (hereinafter, EX) 2, at 7.

The Government's MSD included the Board's certification that the Order and Notice 1, dated January 25, 2019, and Notice 2, dated February 13, 2019, are ''true and correct copies'' of the proceedings of the Board. MSD, EX2, at 1, 6.

Respondent failed to file a response to the MSD by the filing deadline in the ALJ's Briefing Order, nor did he file a response by the date of the ALJ's recommended decision, and the ALJ deemed the Government's motion unopposed. Order Granting Summary Disposition and Recommended Findings of Fact, Conclusions of Law, and Decision (hereinafter, SD), at 4.

The ALJ granted the MSD, finding that '''there is no factual dispute of substance''' and that the Government ''has provided 'reliable and probative evidence' of 'appropriate evidentiary quality' that Respondent lacks state authority to handle controlled substances in Ohio.'' SD, at 8. (Citations omitted). The ALJ also found that ''summary disposition is additionally warranted because the Government carried its burden and [Respondent] failed to respond.'' *Id.*

The ALJ recommended revocation of Respondent's registration because ''the Government has presented sufficient evidence to establish that [Respondent] lacks state authority to dispense controlled substances in Ohio, the state in which [he] holds his DEA registration.'' *Id.* at 9.

By letter dated June 24, 2019, the ALJ certified and transmitted the record to me for final Agency action. In that letter, the ALJ advised that neither party filed exceptions and that the time period to do so had expired.

I issue this Decision and Order based on the entire record before me. 21 CFR 1301.43(e). I make the following findings of fact.

Findings of Fact

Respondent's DEA Registration

On September 10, 2016, Respondent renewed DEA Certificate of Registration No. FH4036667, at the registered address of 793 West State Street, Columbus, Ohio. MSD, EX1 (Certification of Registration History), at 1. Pursuant to this registration, Respondent is authorized to dispense controlled substances in schedules II through V as a practitioner. *Id.* Respondent's registration expired on October 31, 2019.[2] *Id.* at 1.

The Status of Respondent's State License

On January 25, 2019, the Board issued an Order and Notice summarily suspending Respondent's certificate to practice osteopathic medicine and surgery in the State of Ohio, finding that there was ''clear and convincing evidence'' that Respondent violated Ohio law. MSD, EX2 at 7; *see also* MSD, EX2, at 9–11. In its Order, the Board found that Respondent's ''continued practice presents a danger of immediate and serious harm to the public.'' MSD, EX2, at 7. On the same date, the Board also issued a Notice of Summary Suspension and Opportunity for

[1] The Hearing Request was filed with the Office of Administrative Law by email after 5 p.m. on April 30, 2019, therefore the ALJ deemed the filing date to be May 1, 2019. Briefing Order, at 1. Respondent's Hearing Request was also filed by U.S. Mail, received on May 9, 2019.

[2] The fact that Respondent allowed his registration to expire during the pendency of an OSC does not impact my jurisdiction or prerogative under the Controlled Substances Act (hereinafter, CSA) to adjudicate the OSC to finality. *Jeffrey D. Olsen, MD,* 84 FR 68,474 (2019).

Hearing (hereinafter, Notice) to Respondent, notifying him that his ''certificate/license to practice osteopathic medicine and surgery in the State of Ohio is summarily suspended'' and that ''at this time [he is] no longer authorized to practice osteopathic medicine and surgery in Ohio.'' *Id.* at 9. In its Notice, the Board specifically alleged that Respondent's employer hospital terminated his employment ''after determining that the medical treatment [Respondent] provided was below the standard of care and jeopardized the safety of patients'' because ''at least twenty-seven patients received doses of controlled substances that significantly exceeded the acceptable dose range and were at fatal levels.'' *Id.*

The Notice alleged that Respondent's conduct constituted a '' 'failure to maintain minimal standards applicable to the selection or administration of drugs' '' and '' 'a departure from . . . minimal standards of care of similar practitioners under the same or similar circumstances,' '' and his actions ''were in bad faith, and/or outside the scope of [his] authority, and/or not in accordance with reasonable medical standards.'' *Id.* at 10 (quoting Ohio Rev. Code Ann. §§ 4731.22(B)(2) and (B)(6).

The Notice also informed Respondent that he was entitled to a hearing on the Board's allegations. MSD, EX2, at 11. The Government also provided a copy of a second Notice of Opportunity for Hearing (hereinafter, Notice 2) issued by the Board on February 13, 2019, which contained additional allegations of violations of Ohio law and advised Respondent of his right to a hearing before the Board. *Id.* at 2–4. Respondent was ordered to ''immediately cease the practice of osteopathic medicine and surgery in Ohio.'' *Id.* at 7.

According to Ohio's online records, of which I take official notice, Respondent's license is still suspended. [3] *https://elicense.ohio.gov/oh_verifylicense?firstName=&lastName=Husel&licenseNumber=&searchType=individual* (last visited January 30, 2020).

Accordingly, I find that Respondent currently is not licensed to engage in the practice of medicine in Ohio, the state in which Respondent is registered with the DEA.

Discussion

Pursuant to 21 U.S.C. 824(a)(3), the Attorney General is authorized to suspend or revoke a registration issued under section 823 of the CSA ''upon a finding that the registrant . . . has had his State license or registration suspended . . . [or] revoked . . . by competent State authority and is no longer authorized by State law to engage in the . . . dispensing of controlled substances.'' With respect to a practitioner, the DEA has also long held that the possession of authority to dispense controlled substances under the laws of the state in which a practitioner engages in professional practice is a fundamental condition for obtaining and maintaining a practitioner's registration. *See, e.g., James L. Hooper, MD,* 76 FR 71,371 (2011), *pet. for rev. denied,* 481 Fed. Appx. 826 (4th Cir. 2012); *Frederick Marsh Blanton, MD,* 43 FR 27,616, 27,617 (1978).

This rule derives from the text of two provisions of the CSA. First, Congress defined the term ''practitioner'' to mean ''a physician . . . or other person licensed, registered, or otherwise permitted, by . . . the jurisdiction in which he practices . . . to distribute, dispense . . . [or] administer . . . a controlled substance in the course of professional practice.'' 21 U.S.C. 802(21). Second, in setting the requirements for obtaining a practitioner's registration, Congress directed that ''[t]he Attorney General shall register practitioners . . . if the applicant is authorized to dispense . . . controlled substances under the laws of the State in which he practices.'' 21 U.S.C. 823(f). Because Congress has clearly mandated that a practitioner possess state authority in order to be deemed a practitioner under the CSA, the DEA has held repeatedly that revocation of a practitioner's registration is the appropriate sanction whenever he is no longer authorized to dispense controlled substances under the laws of the state in which he practices. *See, e.g., James L. Hooper,* 76 FR at 71,371–72; *Sheran Arden Yeates, MD,* 71 FR 39,130, 39,131 (2006); *Dominick A. Ricci, MD,* 58 FR 51,104, 51,105 (1993); *Bobby Watts, MD,* 53 FR 11,919, 11,920 (1988); *Frederick Marsh Blanton,* 43 FR at 27,617.

Under Ohio law, ''No person shall knowingly obtain, possess, or use a controlled substance or a controlled substance analog,'' except [4] pursuant to a ''prescription issued by a licensed health professional authorized to prescribe drugs if the prescription was issued for a legitimate medical purpose.'' Ohio Rev. Code Ann. §§ 2925.11(A), (B)(1)(d) (West, Westlaw current through File 21 of the 133rd General Assembly (2019–2020)).

Ohio law further states that a '' '[l]icensed health professional authorized to prescribe drugs' or a 'prescriber' means an individual who is authorized by law to prescribe drugs or dangerous drugs . . . in the course of the individual's professional practice.'' Ohio Rev. Code Ann. § 4729.01(I) (West, Westlaw current through Files 1 to 20 of the 133rd General Assembly (2019–2020)). The definition further provides a limited list of authorized prescribers, the relevant provision of which is ''[a] physician authorized under Chapter 4731[ ] of the Revised Code to practice medicine and surgery, osteopathic medicine and surgery, or podiatric medicine and surgery.'' *Id.* at § 4729.01(I)(4). In addition, the Ohio Uniform Controlled Substances Act permits ''[a] licensed health professional authorized to prescribe drugs, if acting in the course of professional practice, in accordance with the laws regulating the professional's practice'' to prescribe or administer schedule II, III, IV, and V controlled substances to patients. Ohio Rev. Code Ann. § 3719.06(A)(1)(a)–(b) (West, Westlaw current through Files 1 to 20 of the 133rd General Assembly (2019–2020)).

Here, the undisputed evidence in the record is that Respondent currently lacks authority to practice medicine in Ohio. As already discussed, a physician is authorized by law to prescribe or administer drugs in Ohio only when authorized to practice medicine and surgery under Ohio law. Thus, because Respondent lacks authority to practice medicine in Ohio and, therefore, is not authorized to handle controlled substances in Ohio, Respondent is not eligible to maintain a DEA registration. Accordingly, I will order that Respondent's DEA registration be revoked.

[3] Under the Administrative Procedure Act, an agency ''may take official notice of facts at any stage in a proceeding—even in the final decision.'' United States Department of Justice, Attorney General's Manual on the Administrative Procedure Act 80 (1947) (Wm. W. Gaunt & Sons, Inc., Reprint 1979). Pursuant to 5 U.S.C. 556(e), ''[w]hen an agency decision rests on official notice of a material fact not appearing in the evidence in the record, a party is entitled, on timely request, to an opportunity to show the contrary.'' Accordingly, Respondent may dispute my finding by filing a properly supported motion for reconsideration within fifteen calendar days of the date of this Order. Any such motion shall be filed with the Office of the Administrator and a copy shall be served on the Government. In the event Respondent files a motion, the Government shall have fifteen calendar days to file a response. Any such motion and response may be filed and served by email (*dea.addo.attorneys@dea.usdoj.gov*) or by mail to Office of the Administrator, Attn: ADDO, Drug Enforcement Administration, 8701 Morrissette Drive, Springfield, VA 22152.

[4] Other irrelevant exceptions omitted.

Order

Pursuant to 28 CFR 0.100(b) and the authority vested in me by 21 U.S.C. 824(a), I hereby revoke DEA Certificate of Registration No. FH4036667 issued to William S. Husel, D.O. Further, pursuant to 28 CFR 0.100(b) and the authority vested in me by 21 U.S.C. 823(f), I hereby deny any pending application of William S. Husel to renew or modify this registration, as well as any other applications of William S. Husel for an additional registration in Ohio. This Order is effective April 9, 2020.

Dated: January 29, 2020.

Uttam Dhillon,

Acting Administrator.

[FR Doc. 2020–04837 Filed 3–9–20; 8:45 am]

BILLING CODE 4410–09–P

DEPARTMENT OF JUSTICE

Drug Enforcement Administration

[Docket No. DEA–592]

Importer of Controlled Substances Application: Johnson Matthey Inc.

ACTION: Notice of application.

DATES: Registered importers of the affected basic classes, and applicants therefore, may file written comments on or objections to the issuance of the proposed registration on or before April 9, 2020. Such persons may also file a written request for a hearing on the application on or before April 9, 2020.

ADDRESSES: Written comments should be sent to: Drug Enforcement Administration, Attention: DEA Federal Register Representative/DPW, 8701 Morrissette Drive, Springfield, Virginia 22152. All requests for a hearing must be sent to: Drug Enforcement Administration, Attn: Administrator, 8701 Morrissette Drive, Springfield, Virginia 22152. All request for a hearing should also be sent to: (1) Drug Enforcement Administration, Attn: Hearing Clerk/OALJ, 8701 Morrissette Drive, Springfield, Virginia 22152; and (2) Drug Enforcement Administration, Attn: DEA Federal Register Representative/DPW, 8701 Morrissette Drive, Springfield, Virginia 22152.

SUPPLEMENTARY INFORMATION: In accordance with 21 CFR 1301.34(a), this is notice that on September 11, 2019, Johnson Matthey Inc., Pharmaceutical Materials, 2003 Nolte Drive, West Deptford, New Jersey 08066–1742 applied to be registered as an importer of the following basic classes of controlled substances:

Controlled substance	Drug code	Schedule
Coca Leaves	9040	II
Thebaine	9333	II
Opium, raw	9600	II
Noroxymorophone	9668	II
Poppy Straw Concentrate	9670	II
Fentanyl	9801	II

The company plans to import Coca Leaves (9040), Opium, raw (9600), and Poppy Straw Concentrate (9670) in order to bulk manufacture active pharmaceutical ingredients (API) for distribution to its customers. The company plans to also import Thebaine (9333), Noroxymorophone (9668), and Fentanyl (9801) to use as analytical reference standards, both internally and to be sold to their customers to support testing of Johnson Matthey Inc.'s active pharmaceutical ingredients (API's) only.

Dated: February 10, 2020.

William T. McDermott,

Assistant Administrator.

[FR Doc. 2020–04836 Filed 3–9–20; 8:45 am]

BILLING CODE 4410–09–P

DEPARTMENT OF JUSTICE

Drug Enforcement Administration

[Docket No. DEA–582]

Bulk Manufacturer of Controlled Substances Application: S&B Pharma, Inc.; Correction

ACTION: Notice of application; correction.

SUMMARY: The Drug Enforcement Administration (DEA) published a document in the **Federal Register** on November 22, 2019, concerning a notice of application. As that document correctly indicated, the applicant, S&B Pharma, Inc., DBA Norac Pharma, 405 South Motor Avenue, Azusa, California 91702–3232 applied to be registered as a bulk manufacturer of a number of controlled substances, to include applying for authorization in order to synthetically manufacture using drug code 7360 (marihuana). However, on the notice of application published, drug code 7360 was inadvertently identified and listed as Gamma Hydroxybutyric Acid instead of Marihuana.

SUPPLEMENTARY INFORMATION:

Correction

In the **Federal Register** of November 22, 2019, in FR Doc. 2019–25402 (84 FR 64563), on page 64564, correct the listing of drug code 7360 to be identified as Marihuana, as is shown below.

Controlled substance	Drug code	Schedule
Marihuana	7360	I

Dated: February 11, 2020.

William T. McDermott,

Assistant Administrator.

[FR Doc. 2020–04829 Filed 3–9–20; 8:45 am]

BILLING CODE 4410–09–P

DEPARTMENT OF JUSTICE

Drug Enforcement Administration

[Docket No. DEA–594]

Importer of Controlled Substances Application: Arizona Department of Corrections

ACTION: Notice of application.

DATES: Registered bulk manufacturers of the affected basic class, and applicants therefore, may file written comments on or objections to the issuance of the proposed registration on or before April 9, 2020. Such persons may also file a written request for a hearing on the application on or before April 9, 2020.

ADDRESSES: Written comments should be sent to: Drug Enforcement Administration, Attention: DEA Federal Register Representative/DPW, 8701 Morrissette Drive, Springfield, Virginia 22152. All requests for a hearing must be sent to: Drug Enforcement Administration, Attn: Administrator, 8701 Morrissette Drive, Springfield, Virginia 22152. All requests for a hearing should also be sent to: (1) Drug Enforcement Administration, Attn: Hearing Clerk/OALJ, 8701 Morrissette Drive, Springfield, Virginia 22152; and (2) Drug Enforcement Administration, Attn: DEA Federal Register

Representative/DPW, 8701 Morrissette Drive, Springfield, Virginia 22152.

SUPPLEMENTARY INFORMATION: In accordance with 21 CFR 1301.34(a), this is notice that on May 24, 2019, Arizona Department of Corrections, 1305 E Butte Avenue, ASPC-Florence, Florence, Arizona 85132–9221 re-applied to be registered as an importer of the following basic classes of controlled substance:

Controlled substance	Drug code	Schedule
Pentobarbital	2270	II

The facility intends to import the above-listed controlled substance for legitimate use. This particular controlled substance is not available for the intended legitimate use within the current domestic supply of the United States.

Dated: February 20, 2020.

William T. McDermott,

Assistant Administrator.

[FR Doc. 2020–04833 Filed 3–9–20; 8:45 am]

BILLING CODE 4410–09–P

DEPARTMENT OF LABOR

Office of the Secretary

Agency Information Collection Activities; Submission for OMB Review; Comment Request; Report on Occupational Employment and Wages

ACTION: Notice of availability; request for comments.

SUMMARY: The Department of Labor (DOL) is submitting the Bureau of Labor Statistics (BLS) sponsored information collection request (ICR) titled, ''Report on Occupational Employment and Wages,'' to the Office of Management and Budget (OMB) for review and approval for continued use, with change, in accordance with the Paperwork Reduction Act of 1995 (PRA). Public comments on the ICR are invited.

DATES: The OMB will consider all written comments that agency receives on or before April 9, 2020.

ADDRESSES: A copy of this ICR with applicable supporting documentation; including a description of the likely respondents, proposed frequency of response, and estimated total burden may be obtained free of charge from the *RegInfo.gov* website at *http://www.reginfo.gov/public/do/PRAViewICR?ref_nbr=202001-1220-002* (this link will only become active on the day following publication of this notice) or by contacting Frederick Licari by telephone at 202–693–8073, TTY 202–693–8064, (these are not toll-free numbers) or by email at *DOL_PRA_PUBLIC@dol.gov.*

Submit comments about this request by mail to the Office of Information and Regulatory Affairs, Attn: OMB Desk Officer for DOL–BLS, Office of Management and Budget, Room 10235, 725 17th Street NW, Washington, DC 20503; by Fax: 202–395–5806 (this is not a toll-free number); or by email: *OIRA_submission@omb.eop.gov.* Commenters are encouraged, but not required, to send a courtesy copy of any comments by mail or courier to the U.S. Department of Labor-OASAM, Office of the Chief Information Officer, Attn: Departmental Information Compliance Management Program, Room N1301, 200 Constitution Avenue NW, Washington, DC 20210; or by email: *DOL_PRA_PUBLIC@dol.gov.*

FOR FURTHER INFORMATION CONTACT: Frederick Licari by telephone at 202–693–8073, TTY 202–693–8064, (these are not toll-free numbers) or by email at *DOL_PRA_PUBLIC@dol.gov.*

SUPPLEMENTARY INFORMATION: This ICR seeks to revise PRA authority for the Report on Occupational Employment and Wages information collection. The Occupational Employment Statistics (OES) survey is a Federal/State establishment survey of wage and salary workers designed to produce data on current detailed occupational employment and wages for each Metropolitan Statistical Area and Metropolitan Division as well as by detailed industry classification. OES survey data assist in the development of employment and training programs established by the Perkins Vocational Education Act of 1998 and the Wagner-Peyser Act. The OES program operates a periodic mail survey of a sample of non-farm establishments conducted by all fifty States, the District of Columbia, Guam, Puerto Rico, and the U.S. Virgin Islands. Over three-year periods, data on occupational employment and wages are collected by industry at the four and five-digit North American Industry Classification System (NAICS) levels. The Department of Labor uses OES data in the administration of the Foreign Labor Certification process under the Immigration Act of 1990.

This information collection is subject to the PRA. A Federal agency generally cannot conduct or sponsor a collection of information, and the public is generally not required to respond to an information collection, unless the OMB under the PRA approves it and displays a currently valid OMB Control Number. In addition, notwithstanding any other provisions of law, no person shall generally be subject to penalty for failing to comply with a collection of information that does not display a valid Control Number. *See* 5 CFR 1320.5(a) and 1320.6. The DOL obtains OMB approval for this information collection under Control Number 1220–0042.

OMB authorization for an ICR cannot be for more than three (3) years without renewal, and the current approval for this collection is scheduled to expire on March 31, 2020. The DOL seeks to revise PRA authorization for this information collection for three (3) more years. The DOL notes that existing information collection requirements submitted to the OMB receive a month-to-month extension while they undergo review. For additional substantive information about this ICR, see the related notice published in the **Federal Register** on October 23, 2019 (84 FR 56843).

Interested parties are encouraged to send comments to the OMB, Office of Information and Regulatory Affairs at the address shown in the **ADDRESSES** section within thirty-(30) days of publication of this notice in the **Federal Register**. In order to help ensure appropriate consideration, comments should mention OMB Control Number 1220–0042. The OMB is particularly interested in comments that:

- Evaluate whether the proposed collection of information is necessary for the proper performance of the functions of the agency, including whether the information will have practical utility:
- Evaluate the accuracy of the agency's estimate of the burden of the proposed collection of information, including the validity of the methodology and assumptions used.
- Enhance the quality, utility, and clarity of the information to be collected; and
- Minimize the burden of the collection of information on those who are to respond, including through the use of appropriate automated, electronic, mechanical, or other technological collection techniques or other forms of information technology, *e.g.,* permitting electronic submission of responses.

Agency: DOL–BLS.

Title of Collection: Report on Occupational Employment and Wages.

OMB Control Number: 1220–0042.

Affected Public: Business or other for-profit, Not-for-profit institutions, Federal Government, State, Local, or Tribal Government.

Total Estimated Number of Respondents: 266,489.

Total Estimated Number of Responses: 266,489.

Total Estimated Annual Time Burden: 133,245 hours.

Total Estimated Annual Other Costs Burden: $0.

Authority: 44 U.S.C. 3507(a)(1)(D).

Dated: March 4, 2020.

Frederick Licari,

Departmental Clearance Officer.

[FR Doc. 2020–04802 Filed 3–9–20; 8:45 am]

BILLING CODE 4510–24–P

DEPARTMENT OF LABOR

Office of the Secretary

Agency Information Collection Activities; Submission for OMB Review; Comment Request; Securing Financial Obligations Under the Longshore and Harbor Workers' Compensation Act and Its Extensions

ACTION: Notice of availability; request for comments.

SUMMARY: The Department of Labor (DOL) is submitting the Office of Workers' Compensations Programs (OWCP) sponsored information collection request (ICR) reinstatement without change titled, ''Securing Financial Obligations Under the Longshore and Harbor Workers' Compensation Act and its Extensions,'' to the Office of Management and Budget (OMB) for review and approval for use in accordance with the Paperwork Reduction Act. Public comments on the ICR are invited.

DATES: The OMB will consider all written comments that agency receives on or before April 9, 2020.

ADDRESSES: A copy of this ICR with applicable supporting documentation; including a description of the likely respondents, proposed frequency of response, and estimated total burden may be obtained free of charge from the *RegInfo.gov* website at *http://www.reginfo.gov/public/do/PRAViewICR?ref_nbr=201910-1240-003* (this link will only become active on the day following publication of this notice) or by contacting Frederick Licari by telephone at 202–693–8073, TTY 202–693–8064, (these are not toll-free numbers) or sending an email to *DOL_PRA_PUBLIC@dol.gov.*

Submit comments about this request by mail or courier to the Office of Information and Regulatory Affairs, Attn: OMB Desk Officer for DOL–OWCP, Office of Management and Budget, Room 10235, 725 17th Street NW, Washington, DC 20503; by Fax: 202–395–5806 (this is not a toll-free number); or by email: *OIRA_submission@omb.eop.gov.* Commenters are encouraged, but not required, to send a courtesy copy of any comments by mail or courier to the U.S. Department of Labor-OASAM, Office of the Chief Information Officer, Attn: Departmental Information Compliance Management Program, Room N1301, 200 Constitution Avenue NW, Washington, DC 20210; or by email: *DOL_PRA_PUBLIC@dol.gov.*

FOR FURTHER INFORMATION CONTACT: Contact Frederick Licari by telephone at 202–693–8073, TTY 202–693–8064, (these are not toll-free numbers) or sending an email to *DOL_PRA_PUBLIC@dol.gov.*

SUPPLEMENTARY INFORMATION: This ICR seeks approval, under the PRA, for a reinstatement without change to the Securing Financial Obligations Under the Longshore and Harbor Workers' Compensation Act and its Extensions. Forms LS–275–IC, LS–275–SI and LS–276 cover the submission of information by insurance carriers and self-insured employers regarding their ability to meet their financial obligations under the Longshore Act and its extensions. This Information collection request allows the agency to use a previously approved version from the same information collection under the OMB Control Number provided with the original approval and has been classified as a reinstatement without change.

This proposed information collection is subject to the PRA. A Federal agency generally cannot conduct or sponsor a collection of information, and the public is generally not required to respond to an information collection, unless the OMB under the PRA approves it and displays a currently valid OMB Control Number. In addition, notwithstanding any other provisions of law, no person shall generally be subject to penalty for failing to comply with a collection of information if the collection of information does not display a valid Control Number. *See* 5 CFR 1320.5(a) and 1320.6. For additional substantive information about this ICR, see the related notice published in the **Federal Register** on November 5, 2019 (84 FR 59646).

Interested parties are encouraged to send comments to the OMB, Office of Information and Regulatory Affairs at the address shown in the **ADDRESSES** section within thirty-(30) days of publication of this notice in the **Federal Register**. In order to help ensure appropriate consideration, comments should mention OMB Control Number 1240–0005. The OMB is particularly interested in comments that:

- Evaluate whether the proposed collection of information is necessary for the proper performance of the functions of the agency, including whether the information will have practical utility.
- Evaluate the accuracy of the agency's estimate of the burden of the proposed collection of information, including the validity of the methodology and assumptions used.
- Enhance the quality, utility, and clarity of the information to be collected; and
- Minimize the burden of the collection of information on those who are to respond, including through the use of appropriate automated, electronic, mechanical, or other technological collection techniques or other forms of information technology, *e.g.,* permitting electronic submission of responses.

Agency: DOL–OWCP.

Title of Collection: Securing Financial Obligations Under the Longshore and Harbor Workers' Compensation Act and its Extensions.

OMB Control Number: 1240–0005.

Affected Public: Private Sector, Business or other for-profits, not-for-profits institutions.

Total Estimated Number of Respondents: 695.

Total Estimated Number of Responses: 695.

Total Estimated Annual Time Burden: 869 hours.

Total Estimated Annual Other Costs Burden: $16,152.

Authority: 44 U.S.C. 3507(a)(1)(D).

Dated: March 04, 2020.

Frederick Licari,

Departmental Clearance Officer.

[FR Doc. 2020–04850 Filed 3–9–20; 8:45 am]

BILLING CODE 4510–CF–P

LEGAL SERVICES CORPORATION

Notice to LSC Grantees of Application Process for Subgranting 2020 Basic Field Grant Funds Midyear

AGENCY: Legal Services Corporation.

ACTION: Notice of application dates and format for applications to make midyear subgrants of 2020 Basic Field Grant funds.

SUMMARY: The Legal Services Corporation (LSC) is the national organization charged with administering Federal funds provided for civil legal

services to low-income people. LSC is announcing the submission dates for applications to make subgrants of Basic Field Grant funds starting after March 1, 2020 but before January 1, 2021. LSC is also providing information about where applicants may locate subgrant application forms and directions for providing the information required in the application.

DATES: See the Supplementary Information section for application dates.

ADDRESSES: Legal Services Corporation—Office of Compliance and Enforcement, 3333 K Street NW, Third Floor, Washington, DC 20007–3522.

FOR FURTHER INFORMATION CONTACT: Megan Lacchini, Office of Compliance and Enforcement by email at *lacchinim@lsc.gov* or (202) 295–1506, or visit the LSC website at *http://www.lsc.gov/grants-grantee-resources/grantee-guidance/how-apply-subgrant.*

SUPPLEMENTARY INFORMATION: Under 45 CFR part 1627, LSC must publish, on an annual basis, ''notice of the requirements concerning the format and contents of the application annually in the **Federal Register** and on its website.'' 45 CFR 1627.4(b). This Notice and the publication of the Subgrant Application Forms on LSC's website satisfy § 1627.4(b)'s notice requirement for midyear subgrants of Basic Field Grant funds. Only current or prospective recipients of LSC Basic Field Grants may apply for approval to subgrant these funds.

An applicant must submit an application to make a midyear subgrant of LSC Basic Field Grant funds at least 45 days in advance of the subgrant's proposed effective date. 45 CFR 1627.4(b)(2).

Applicants must submit applications at *https://lscgrants.lsc.gov.* Applicants may access the application under the ''Subgrants'' heading on their LSC Grants home page. Applicants may initiate an application by selecting ''Initiate Subgrant Application.'' Applicants must then provide the information requested in the LSC Grants data fields, located in the Subrecipient Profile, Subgrant Summary, and Subrecipient Budget screens, and upload the following documents:

- A draft Subgrant Agreement (with the required terms provided in the Subgrant Agreement Template ''Agreement Template''); and
- Subgrant Inquiry Form B (for new subgrants) or C (for renewal subgrants) (''Inquiries'').

Applicants seeking to subgrant to an organization that is not a current LSC grantee must also upload:

- The subrecipient's accounting manual (or letter indicating that the subrecipient does not have one and why);
- The subrecipient's most recent audited financial statement (or letter indicating that the subrecipient does not have one and why);
- The subrecipient's current cost allocation policy (or letter indicating that the subrecipient does not have one and why);
- The subrecipient's current fidelity bond coverage (or letter indicating that the subrecipient does not have one);
- The subrecipient's conflict of interest policy (or letter indicating that the subrecipient does not have one); and
- The subrecipient's whistleblower policy (or letter indicating that the subrecipient does not have one).

The Agreement Template and Inquiries are available on LSC's website at *http://www.lsc.gov/grants-grantee-resources/grantee-guidance/how-apply-subgrant.* LSC encourages applicants to use LSC's Agreement Template as a model subgrant agreement. If the applicant does not, the proposed agreement must include, at a minimum, the substance of the provisions of the Template.

Once submitted, LSC will evaluate the application and provide applicants with instructions on any needed modifications to the information, documents, or Draft Agreement provided with the application. The applicant must then upload a final and signed subgrant agreement through LSC Grants. This can be done by selecting ''Upload Signed Agreement'' to the right of the application ''Status'' under the ''Subgrant'' heading on an applicant's LSC Grants home page.

As required by 45 CFR 1627.4(b)(3), LSC will inform applicants of its decision to disapprove, approve, or request modifications to the subgrant by no later than the subgrant's proposed effective date.

Dated: March 4, 2020.

Stefanie Davis,

Senior Assistant General Counsel.

[FR Doc. 2020–04858 Filed 3–9–20; 8:45 am]

BILLING CODE 7050–01–P

MERIT SYSTEMS PROTECTION BOARD

Notice of Guidance Portal

AGENCY: Merit Systems Protection Board.

ACTION: Notice of availability.

SUMMARY: Pursuant to Executive Order 13891 and OMB Memorandum M–20–02, the Merit Systems Protection Board (MSPB) is noticing the March 3, 2020 launch of a single, searchable, indexed database containing all MSPB guidance documents currently in effect.

DATES: Applicable March 3, 2020.

ADDRESSES: *www.mspb.gov/guidance.*

FOR FURTHER INFORMATION CONTACT: Jennifer Everling, Acting Clerk of the Board, Merit Systems Protection Board, 1615 M Street NW, Washington, DC 20419; Phone: (202) 653–7200; Fax: (202) 653–7130; or email: *mspb@mspb.gov.*

SUPPLEMENTARY INFORMATION: Executive Order 13891 requires federal agencies to ''establish or maintain on its website a single, searchable, indexed database that contains or links to all guidance documents in effect from such agency or component.'' Executive Order 13891, 84 FR 55,235 (Oct. 9, 2019). OMB Memorandum M–20–02 further requires agencies to ''send to the **Federal Register** a notice announcing the existence of the new guidance portal and explaining that all guidance documents remaining in effect are contained on the new guidance portal.'' OMB Memorandum M–20–02 (Oct. 31, 2019).

In compliance with the above, MSPB is noticing the availability of a single, searchable, indexed database containing all MSPB guidance documents currently in effect, which may be accessed at *www.mspb.gov/guidance* on or after March 3, 2020.

(Authority: E.O. 13891, 84 FR 55,235; OMB Memorandum M–20–02.)

Jennifer Everling,

Acting Clerk of the Board.

[FR Doc. 2020–04862 Filed 3–9–20; 8:45 am]

BILLING CODE 7400–01–P

NATIONAL AERONAUTICS AND SPACE ADMINISTRATION

[Notice (20–029)]

Reporting Requirements Regarding Findings of Harassment, Sexual Harassment, Other Forms of Harassment, or Sexual Assault

AGENCY: National Aeronautics and Space Administration.

ACTION: Final Notice of a new NASA term and condition regarding sexual harassment, other forms of harassment, and sexual assault.

SUMMARY: NASA is publishing, in final form, a new term and condition regarding sexual harassment, other forms of harassment, and sexual assault. NASA's intention to develop and

implement this new term and condition was specified in the **Federal Register** of July 17, 2019, FR Doc. 2019–15088, on page 34206.

The many hundreds of U.S. institutions of higher education and other organizations that receive NASA funds are responsible for fully investigating complaints under and for compliance with federal non-discrimination laws, regulations, and executive orders. The implementation of new reporting requirements is necessary to help ensure research environments to which NASA provides funding are free from sexual harassment, other forms of harassment, and sexual assault. Additionally, NASA is bolstering our policies, guidelines, and communications. These requirements are intended, first, to better ensure that organizations funded by NASA clearly understand expectations and requirements. In addition, NASA seeks to ensure that recipients of grants and cooperative agreements respond promptly and appropriately to instances of sexual harassment, other forms of harassment, and sexual assault.

FOR FURTHER INFORMATION CONTACT: For any questions, comments, or concerns regarding sexual or other forms of harassment, please contact the Office of Diversity and Equal Opportunity (ODEO), 300 E Street SW, Washington, DC 20546, email: *civilrightsinfo@nasa.gov;* telephone (202) 358–2180; FAX: (202) 358–3336.

SUPPLEMENTARY INFORMATION: As a U.S. funding Agency of scientific research and development, and the primary funding Agency for aeronautics and space research and technology, NASA is committed to promoting safe, productive research and education environments for current and future scientists and engineers. We consider the Principal Investigator (PI) and any Co-Investigator(s) (Co-I) identified on a NASA award and all personnel supported by a NASA award to be in a position of trust and must not engage in harassing behavior during the award period of performance whether at the recipient's institution, on-line, or outside the organization, such as at field sites or facilities, or during conferences and workshops.

On July 17, 2019, NASA published a request for public comment regarding the Agency's proposed implementation of new notification requirements [84 FR 34206, pages 34206–24208, July 17, 2019]. All comments were carefully considered in developing the final version of the term and condition. A document listing the comments and NASA responses is posted on the NASA ODEO website at: *https://www.nasa.gov/offices/odeo/policy-and-publications.*

Upon implementation, the new term and condition will require recipient organizations to report to NASA any findings/determinations of sexual harassment, other forms of harassment, or sexual assault regarding a NASA funded PI or Co-I. The new term and condition will also require the recipient to report to NASA if the PI or Co-I is placed on administrative leave or if the recipient has imposed any administrative action on the PI or Co-I, or any determination or an investigation of an alleged violation of the recipient's policies or codes of conduct, statutes, regulations, or executive orders relating to sexual harassment, other forms of harassment, or sexual assault. Finally, the new term and condition specifies the procedures that will be followed by NASA upon receipt of a report.

The full text of the new term and condition is provided below:

Reporting Requirements Regarding Sexual Harassment, Other Forms of Harassment, or Sexual Assault

(a) The Principal Investigator (PI) and any Co-Investigator(s) (Co-I) identified on a NASA award are in a position of trust. These individuals must comport themselves in a responsible and accountable manner during the award period of performance, whether at the recipient's institution, on-line, or at locales such as field sites, facilities, or conferences/workshops. Above all, NASA wishes to assure the safety, integrity, and excellence of the programs and activities it funds.

(b) For purposes of this term and condition, the following definitions apply:

1. *Administrative Leave/Administrative Action:* Any temporary/interim suspension or permanent removal of the PI or Co-I, or any administrative action imposed on the PI or Co-I by the recipient under organizational policies or codes of conduct, statutes, regulations, or executive orders, relating to activities, including but not limited to the following: teaching, advising, mentoring, research, management/administrative duties, or presence on campus.

2. *Finding/Determination:* The final disposition of a matter involving sexual harassment or other form of harassment under organizational policies and processes, to include the exhaustion of permissible appeals exercised by the PI or Co-I, or a conviction of a sexual offense in a criminal court of law.

3. *Other Forms of Harassment:* Non-gender or non-sex-based harassment of individuals protected under federal civil rights laws, as set forth in organizational policies or codes of conduct, statutes, regulations, or executive orders.

4. *Sexual harassment:* May include but is not limited to gender or sex-based harassment, unwelcome sexual attention, sexual coercion, or creating a hostile environment, as set forth in organizational policies or codes of conduct, statutes, regulations, or executive orders.

(c) *The recipient is required to report to NASA:* (1) Any finding/determination regarding the PI or any Co-I [1] that demonstrates a violation of the recipient's policies or codes of conduct, relating to sexual harassment, other forms of harassment, or sexual assault; and/or (2) if the PI or any Co-I is placed on administrative leave or if any administrative action has been imposed on the PI or any Co-I by the recipient relating to any finding/determination or an investigation of an alleged violation of the recipient's policies or codes of conduct, statutes, regulations, or executive orders relating to sexual harassment, other forms of harassment, or sexual assault.[2] Such reporting must be submitted by the Authorized Organizational Representative (AOR) to NASA's Office of Diversity and Equal Opportunity at *https://missionstem.nasa.gov/term-condition-institutional-harassment-discr.html* within 10 business days from the date of the finding/determination, or the date of the placement of a PI or Co-I by the recipient on administrative leave or the imposition of an administrative action.[3]

(d) Recipient agrees to insert the substance of this term and condition in any subaward/subcontract involving a co-investigator. Recipient will be responsible for ensuring that all reports, including those related to co-investigators, comply with this term and condition.

(e) Each report must include the following information:

[1] If a co-I is affiliated with a subrecipient organization, the AOR of the subrecipient must provide the requisite information directly to NASA and to the recipient. The subrecipient must act in accordance with Title 2 of the Code of Federal Regulations, Section 200.331, Requirements for Pass-Through Entities.

[2] Recipient findings/determinations and placement of a PI or Co-I on administrative leave or the imposition of an administrative action must be conducted in accordance with organizational policies and processes. They also must be conducted in accordance with federal laws, regulations, and executive orders.

[3] Such report must be provided regardless of whether the behavior leading to the finding/determination, or placement on administrative leave, or the imposition of an administrative action occurred while the PI or Co-I was carrying out award activities.

• NASA Award Number;

• Name of PI or Co-I being reported; [4]

Type of Report: Select one of the following:

• Finding/Determination that the reported individual has been found to have violated the recipient's policies or codes of conduct, statutes, regulations, or executive orders relating to sexual harassment, other forms of harassment, or sexual assault; *or*

• Placement by the recipient of the reported individual on administrative leave or the imposition of any administrative action on the PI or any Co-I by the recipient relating to any finding/determination, or an investigation of an alleged violation of the recipient's policies or codes of conduct, statutes, regulations, or executive orders relating to sexual harassment, other forms of harassment, or sexual assault.

The recipient must also provide:

• A description of the finding/determination and action(s) taken, if any; *and/or*

• The reason(s) for, and conditions of placement of the PI or any Co-I on administrative action or administrative leave.

The recipient, at any time, may propose a substitute investigator if it determines the PI or any Co-I may not be able to carry out the funded project or activity and/or abide by the award terms and conditions.

In reviewing the report, NASA will consider, at a minimum, the following factors:

a. The safety and security of personnel supported by the NASA award;

b. The overall impact to the NASA-funded activity;

c. The continued advancement of taxpayer-funded investments in science and scientists; and

d. Whether the recipient has taken appropriate action(s) to ensure the continuity of science and that continued progress under the funded project can be made.

(f) Upon receipt and review of the information provided in the report, NASA will consult with the AOR, or designee. Based on the results of this review and consultation, the Agency may, if necessary and in accordance with 2 CFR 200.338, assert its programmatic stewardship responsibilities and oversight authority to initiate the substitution or removal of the PI or any Co-I, reduce the award funding amount, or where neither of those previous options is available or adequate, to suspend or terminate the award. Other personnel supported by a NASA award must likewise remain in full compliance with the recipient's policies or codes of conduct, statutes, regulations or executive orders relating to sexual harassment, other forms of harassment, or sexual assault. With regard to any personnel not in compliance, the recipient must make appropriate arrangements to ensure the safety and security of other award personnel and the continued progress of the funded project. Notification of these actions is not required under this term and condition.

Other personnel supported by a NASA award must likewise remain in full compliance with awardee policies or codes of conduct, statutes, regulations, or executive orders relating to sexual harassment, other forms of harassment, or sexual assault. With regard to any personnel not in compliance, the awardee must make appropriate arrangements to ensure the safety and security of other award personnel and the continued progress of the funded project. Notification of these actions is not required under this term and condition.

End of Term and Condition

Implementation: NASA will implement the new term through revision of the NASA Agency Specific Requirements to the Research Terms and Conditions, the Grant General Conditions, and the Cooperative Agreement—Financial and Administrative Terms and Conditions. These revised terms and conditions will become effective thirty days from the date of publication in the **Federal Register** and will be available in the NASA Grants and Cooperative Agreement Manual (GCAM).

The new term and condition will be applied to all new NASA awards and funding amendments to existing awards made on or after the effective date. This new reporting requirement will apply to all findings/determinations that occur on or after the effective date of the terms and conditions. With regard to notification of placement on administrative leave, the recipient must notify NASA within 10 business days from the date the recipient determines that placement on administrative leave is necessary.

Recipients are strongly encouraged to conduct a thorough review of the term and condition to determine whether the new reporting requirements necessitate any changes to the institution's policies and procedures. The new term and condition will be effective for any new award, or funding amendment to an existing award, made on or after the effective date. For these purposes, this means that any finding/determination, placement on administrative leave or the imposition of any administrative action by the institution made on or after the start date of an award or funding amendment subject to the new term will invoke the new reporting requirements.

Public Comments Received in Response to NASA Federal Register Notice of July 17, 2019 (84 FR 34206) and NASA Responses

Brigham Young University

Comment: Notwithstanding [our] support, we strongly encourage NASA to align its reporting requirements with the National Science Foundation (NSF) reporting requirements that have already been put in place. Standardizing reporting requirements across federal funding agencies is the best way to effect compliance from recipients of federal financial assistance that have grants from or contracts with multiple agencies . . . Although the NSF reporting requirements are similar to the reporting requirements described in NASA's notice, several important differences exist, including the reporting period, the point at which administrative actions must be reported, and the requirements for reporting convictions of sexual offenses. These inconsistences should be addressed in an effort to reduce the administrative burden of compliance. The adoption of differing reporting requirements across federal agencies places an unnecessary administrative burden on recipients of federal financial assistance and creates the potential for confusion. In contrast, having uniform reporting requirements would promote efficiency and institutional compliance. Accordingly, we request that NASA work with other federal agencies, including NSF, to align its reporting requirements with similar existing requirements and to establish a consistent standard prior to moving forward with the proposed term and condition.

NASA Response: NASA has fully aligned its reporting requirements with the National Science Foundation's (NSF's). The single difference between NASA's proposed term and condition and the term and condition issued by NSF in 2018, is the length of time to report findings of sexual harassment.

[4] Only the identification of the PI or Co-I is required. Personally identifiable information regarding any complainants or other individuals involved in the matter must not be included in the report. In the rare circumstance that information regarding a PI or Co-I is subject to the Family Educational and Privacy Act, 20 U.S.C. 1232g and its implementing regulations, 35 CFR part 99, the recipient shall comply with those requirements.

NSF's term and condition provides for 10 business days to report; NASA's proposed term and condition provided for seven business days. NASA has revised its timeframe from seven to 10 business days to bring the two timeframes into conformity.

Council on Governmental Relations (COGR), Et al.

Comment 1: Reporting administrative action taken regarding a PI or Co-I to NASA during an investigatory process. NASA's proposal would require institutions to report if ''the PI or the Co-I is placed on administrative leave or if the recipient has imposed any administrative action on the PI or the Co-I.'' As defined in the new reporting requirement, ''administrative action'' captures a vast array of temporary actions, which could be and frequently are preliminary to any findings or conclusions. Such actions can relate to activities including ''but not limited to the following: teaching, advising, mentoring, research, management/administrative duties, or presence on campus.'' These preliminary or interim measures are non-punitive and designed to protect all parties involved pending an outcome of an investigation. In addition, we believe a reporting requirement based on administrative actions could chill the use of these important interim measures out of concern that NASA may create a record or take action against a PI or Co-I prematurely. As an alternative to the current recommendation, we recommend that NASA narrow this proposed reporting requirement. One option would be to require reporting only in situations where administrative leave has been imposed and the PI or Co-I has been found responsible but is appealing the adjudication, or when the terms of a pre-adjudication leave would affect performance under the award.

We also urge NASA to rely on existing approval processes in lieu of awardee institutions' reporting of administrative actions taken regarding the PI or Co-I. NASA already has approval procedures for substituting a PI or Co-I when a leave could impact performance. The NASA approval procedures for substituting a PI or Co-I when performance is impacted provides the agency with appropriate notice of this change. Adding an additional notification requirement pertaining to that same PI or Co-I whose performance is impacted by administrative leave during an investigation of reported harassment risks incurring greater costs than the benefits achieved. For these reasons, we recommend that NASA strike the requirement that notification be given to NASA for any administrative action and focus on those that impact performance of the NASA-funded project.

NASA Response: NASA seeks to ensure consistency with NSF's grant term and condition on harassment reporting to ease the administrative burden on recipients that can be caused by differing external requirements. As our definition of administrative leave is consistent with NSF's, NASA declines to limit to final disposition. In addition, NASA views one of the primary purposes of a recipient institution in taking an action such as placing an individual on administrative leave is to better ensure the safety, including psychological and physical safety, of the research environment and the academic community. In the interest of ensuring safe and inclusive research environments, NASA is confident that recipient institutions, including universities and other entities, which are committed to safety and inclusion, will continue to utilize these kinds of actions, when it is appropriate to do so.

Comment 2: Clarification is needed on reportable action. The proposed reporting requirement describes ''Administration Leave/Administrative Action'' as ''Any temporary/interim suspension or permanent removal of the PI or Co-I, or any administrative action imposed on the PI or the Co-I by the recipient under organizational policies or codes of conduct, statutes, regulations, or executive orders, relating to activities, including but not limited to the following: teaching, advising, mentoring, research, management/administrative duties, or presence on campus.'' But there is no real definition of what constitutes an administrative action. The 116th Congress is currently considering H.R. 36 ''Combatting Sexual Harassment in Science Act of 2019.'' The legislation, as passed by the House of Representatives, includes language calling on the Director of the Office of Science and Technology Policy to develop policy guidelines that define administration action as ''*administrative action, related to an allegation against grant personnel of any sexual harassment or gender harassment, as set forth in organizational policies or codes of conduct, statutes, regulations, or executive orders, that affects the ability of grant personnel or their trainees to carry out the activities of the grant.*'' We ask that NASA consider including this language in the final NASA reporting requirements.

NASA Response: NASA defines ''Administrative Action/Administrative Leave'' as ''Any temporary/interim suspension or permanent removal of the PI or Co-I, or any administrative action imposed on the PI or Co-I by the recipient under organizational policies or codes of conduct, statutes, regulations, or executive orders, relating to activities, including, but not limited to, the following: teaching, advising, mentoring, research, management/administrative duties, or presence on campus.'' While we appreciate the suggested language, we view it as placing unnecessary limitations on the requirement. In addition, the current language is consistent with NSF's definition. Finally, as Congress has not enacted the proposed legislation into law, NASA declines to accept this comment and will retain the current definition.

Comment 3: The reporting requirement may have unintended consequences. If the report to NASA forms the basis for a NASA decision, and is subject to the Freedom of Information Act (FOIA), a graduate student, research trainee, postdoctoral researcher, or other grant personnel may be legitimately concerned that the release of such a report could impact their future employment opportunities. This would be especially troubling in a situation that results in no findings. A graduate student, research trainee, postdoctoral researcher, or other grant personnel would also need to weigh their decision to bring forth an allegation with the understanding that such a report may lead to the removal of funding that is being used to support the research grant, which may be detrimental to their career progress. To mitigate these unintended consequences, we recommend revising the language of the new reporting requirement to emphasize the NASA process to substitute a PI or Co-I, rather than suspension or termination of the award. We appreciate the process proposed by NASA that will allow ''the recipient, at any time, to propose a substitute investigator if it determines the PI or any Co-I may not be able to carry out the funded project or activity and/or abide by the award terms and conditions.''

NASA Response: The proposed NASA term and condition aligns with the National Science Foundation term and condition. Both agencies reference the possibility of substitution or removal of a PI or Co-I, as well as the possibility of suspension or termination. They do so in the context of an agency review of the report and a consultation between the agency and the recipient institution. This consultation seeks in part to ensure that ''the recipient has taken appropriate action(s) to ensure the continuity of science and that continued progress under the funded project can be made.''

In addition, NASA recognizes the sensitivity of the information that may be contained in the notifications and will take appropriate steps to manage such information consistent with the Privacy Act, the Freedom of Information Act and other applicable federal laws.

Comment 4: Initiation of the Substitution or Removal of the PI or any Co-I. We also understand that upon receipt of and review of the information, NASA ''may, if necessary and in accordance with 2 CFR 200.338, assert its programmatic stewardship responsibilities to initiate the substitution or removal of the PI or any Co-I, reduce the award funding amount, or where neither of those previous options is available or adequate, to suspend or terminate the award.'' Before taking such a drastic course of action as terminating the award, we request that NASA work with the Authorized Organizational Representative (AOR) to discuss and exhaustively explore all other options.

NASA Response: NASA will first engage the recipient institution to discuss options including, but not limited to, use of a substitute PI or Co-I. NASA anticipates that action to suspend/terminate the award will be necessary only if the recipient does not identify a reasonable alternative. If, based on the factors identified above, the recipient institution determines that it is appropriate to initiate use of a substitute PI on the award, and then at some future point, the administrative leave or administrative action is lifted, or if the PI or Co-I is found not to have violated the recipient's policies, codes of conduct, statutes or regulations or executive orders relating to sexual harassment, the recipient should work with NASA regarding reinstatement of the PI to the award.

Comment 5: Clarity is needed on confidentiality and use of reported information. We are very concerned about the prospect that sensitive personnel information, not otherwise public, could become public under FOIA. We ask that NASA carefully examine this issue and modify the proposed reporting requirements with clarifying language which sufficiently addresses these concerns. This will be particularly important if NASA chooses to maintain the reporting obligations in the new term and condition, which will result in the information arising from matters under an investigation that may not even lead to a finding of a violation. NASA should make clear in the new reporting requirements how it will handle reported information. Will it be shared with other agencies? Although we strongly recommend that NASA not mandate the reporting of all kinds of administrative actions, should the agency maintain that proposed requirement, it will be important for NASA to have a way to update its records following an institutional finding of no responsibility. Prior to implementation, NASA should be confident that its internal processes and protocols will fully address reasonable concerns. At the minimum, if a report is triggered before an investigation concludes and the investigation yields no ''finding/determination,'' which would require the awardee to provide further information to NASA, the agency should clearly note that in any archived material pertaining to that report.

NASA Response: NASA recognizes the sensitivity of the information that may be contained in the notifications and will take appropriate steps to manage such information consistent with the Privacy Act, the Freedom of Information Act and other applicable federal laws. Importantly, NASA makes it clear in its proposed term and condition that it does not require names other than those of the relevant PI or Co-I and that other names must not be included.

NASA also recognizes that, because of the sensitivity of the information contained in the notifications, there is a need to limit exposure of this information on grant management systems and will protect the information consistent with federal law referenced above. NASA intends to follow the methodology of NSF in this regard, developing a secure mechanism by which the notifications will be routed directly to the NASA Office of Diversity and Equal Opportunity and limiting access to only those NASA personnel with an express need to know. NASA also has revised the term and condition to make clear to those submitting notifications not to include names other than the PI or Co-I. NASA has an obligation to keep complete and accurate records. Therefore, as part of the internal process to implement the term and condition, NASA will clearly note in its records when a recipient institution finds that an alleged harasser did not engage in harassment.

Comment 6: The intersection with privacy regulations and state laws could pose conflicts. We have concerns about how the new reporting requirements will coincide with the Family Educational Rights and Privacy Act (FERPA) and other federal privacy regulations or state laws, which may prohibit sharing information on student and personnel matters outside of the higher education institution. We have concerns that there may be overlap or redundancy that could create conflicting legal obligations for higher education institutions. It is possible that conflicts between the NASA reporting requirement and other privacy regulations and laws may cause confusion for recipients and create questions about which legal obligation takes precedent.

NASA Response: NASA agrees that in a rare circumstance that a PI or co-I is a student subject to FERPA, this reporting requirement could conflict with FERPA's statutory prohibitions. Accordingly, footnote four was adjusted to note that institutions should comply with FERPA in these circumstances. With regard to state laws and regulations, many state privacy laws contain language allowing for information disclosure to federal agencies, and if there were to be a conflict, traditional preemption doctrines would apply.

Comment 7: Subrecipient reporting should be the subrecipient's responsibility. The proposed reporting requirement includes the requirement that ''Recipient agrees to insert the substance of this term and condition in any subaward/subcontract involving a co-investigator. *Recipient will be responsible for ensuring that all reports, including those related to co-investigators, comply with this term and condition.*'' We recommend that if a subrecipient has a reportable finding/determination, compliance with this rule shall be the direct responsibility of the subrecipient. Due to privacy concerns, it is not appropriate for the primary award recipient to have direct knowledge of the investigation being conducted by a subrecipient. The primary award recipient's responsibility should be limited to passing through the appropriate terms and conditions from the prime award for inclusion in the subaward. We suggest that the subrecipient provide the subrecipient's report directly to NASA. Any changes that directly impact the performance of the subaward or the prime recipient's obligation to NASA should be communicated via the prior approval requirements of the subrecipient's subaward. Any temporary/interim suspension or permanent removal of the PI or Co-I should be in accordance with the subrecipient's policies or codes of conduct, as well as any relevant statutes, regulations, or executive orders.

NASA Response: NASA agrees that the primary award recipient's responsibility should be limited to passing through the appropriate terms and conditions from the prime award

for inclusion in the subaward. NASA has revised the term and condition to require the subrecipient's Authorized Organizational Representative to report notifications directly to NASA. The subrecipient must act in accordance with Title 2 Code of Federal Regulations, Section 200.331, Requirements for Pass-Through Entities.

Comment 8: Interaction with pending Title IX rules and other existing federal and state rules. Colleges and universities have a clear and unambiguous responsibility under Title IX of the Education Amendments of 1972 to respond to allegations of sexual harassment, including sexual assault . . . There are laws in addition to Title IX that address sexual harassment involving employees—most notably Title VII of the Civil Rights Act of 1964, but also numerous state and local laws. The overlapping but different requirements imposed by the new term and condition, Title VII, and state and local antidiscrimination laws could cause confusion and create conflicting obligations for institutions that are committed to complying with all applicable laws. Federal policy needs to give institutions enough flexibility to ensure that all legal and other obligations—no matter their source—are properly addressed when resolving sexual harassment allegations. The U.S. Department of Education published a proposed Title IX rule in late 2018 and the higher education community submitted comments in January 2019.[5] When the rule is finalized later this year, colleges and universities will likely undertake changes in campus structures in regards to the implementation of the final rule. This, as well as the new terms and condition from NSF, NASA, and other federal agencies, without coordination or shared definitions, can make the process confusing and more complicated for the person reporting the harassment and the institution implementing the various rules. This is especially true as the Title IX offices are often the offices tasked with carrying out the new rules, while the AOR has the ultimate reporting duty to NASA. We ask wherever possible, NASA utilize existing definitions and harmonize with other federal agencies regarding existing rules and reporting requirements.

NASA Response: NASA is coordinating its efforts with the White House National Science and Technology Joint Committee on Science and Technology Subcommittee on Coordinating Administrative Requirements for Research and the Subcommittee on Safe and Inclusive Research Environments to ensure NASA is proceeding in a coordinated manner with other agencies, including the National Science Foundation. This coordination includes utilizing existing definitions and harmonizing with other federal agencies regarding existing rules and reporting requirements, wherever possible.

Comment 9: An appeals process is needed. NASA should provide for an appeals process for any determinations made with the new term and condition. This should also be coordinated with any institutional appeals process and is especially important as institutions often have complex multi-layered appeals procedures. A NASA appeals procedure is particularly necessary in cases in which an interim measure (*e.g.* administrative action) is imposed and reported to NASA but where the PI or Co-I is ultimately found not responsible. The outcome of an appeals process, whether at NASA or the institution, should be promptly shared between NASA and the institution. Also, please know that institutions welcome the opportunity to work with NASA in the development of an appeals process.

NASA Response: NASA declines to establish an appeals process related to this term and condition. Federal civil rights laws and regulations prohibiting discrimination and harassment by recipients of federal financial assistance, including NASA regulations, provide recipients with due process rights for action taken by the Agency address a finding of non-compliance with these laws and regulations. The Agency will not take such action until it determines that (1) the recipient's compliance cannot be secured by voluntary means, (2) there has been an express finding on the record, after opportunity for hearing, of a failure to comply with a requirement and (3) the action has been approved by the NASA Administrator.

Comment 10: Submission of notification to NASA should be secure. The **Federal Register** notice indicates that notifications must be submitted by the AOR via email to NASA's Office of Diversity and Equal Opportunity via email at: *civilrightsinfo@nasa.gov.* We recommend that NASA consider submission of notifications via a secure web portal rather than through email.

NASA Response: NASA will develop a secure mechanism by which the notifications will be routed directly to the Office of Diversity and Equal Opportunity, which will limit access to only those NASA personnel with an express need to know. NASA also has revised the term and condition to make clear to those submitting notifications not to include names other than the PI or Co-I.

Comment 11: Sufficient time is needed for the recipient to report notification of placement on administrative leave to NASA. The proposed reporting timeframe of seven (7) business days, however, may not allow institutions adequate time, particularly in the case of an administrative action. In the National Science Foundation (NSF) ''Notification Requirements Regarding Findings of Sexual Harassment, Other Forms of Harassment, or Sexual Assault'' published on September 21, 2018, the final term and condition allows for ten (10) business days for notification to NSF from the date of the finding/determination, or the date of the placement of a PI or a Co-I by the awardee on administration leave.'' While the difference is slight, it is helpful, and we believe there should be harmonization among the federal science agencies on these new terms and conditions wherever possible.

NASA Response: NASA has revised the reporting requirement to allow recipients 10 business days to report from the date of a finding/determination, the date of the placement of a Co-I on leave or the imposition of another administrative action.

Comment 12: Implementation. According to the **Federal Register** notice, ''upon receipt and resolution of all comments, it is NASA's intention to implement the new term through revision of NASA's ''Agency Specific Requirements to the Research Terms and Conditions, the Grant General Conditions, and the Cooperative Agreement-Financial and Administrative Terms and Conditions.'' We strongly encourage NASA's Office of Civil Rights to thoroughly review and consider the comments received from the higher education and scientific communities before taking any action to implement these new reporting requirements. We also encourage NASA to consider convening a small roundtable discussion with key stakeholders from universities to discuss the new reporting requirements before implementing them. An open and comprehensive dialogue between NASA and the community is essential if we are

[5] *https://www.acenet.edu/news-room/Documents/Comments-to-Education-Department-on-Proposed-Rule-Amending-Title-IX-Regulations.pdf* and *https://www.aau.edu/sites/default/files/AAU-Files/Key-Issues/Higher-Education-Regulation/AAU-Title-IX-Comments-1-24-19.pdf* and *https://www.aau.edu/sites/default/files/AAU-Files/Key-Issues/Higher-Education-Regulation/AAU-Title-IX-Comments-1-24-19.pdf.*

to combat and end sexual harassment in the scientific workplace.

NASA Response: NASA is thoroughly reviewing and considering all comments received. The Agency is aware that NSF held a roundtable discussion with key stakeholders before implementing its harassment reporting requirements. NASA intends to hold a diversity, equity and inclusion summit that will include discussion of its new requirements.

University of California System

Comment 1: Consistency. UC is primarily concerned with inconsistencies that exist between NASA's proposal and NSF's term and condition. Should other federal grant-making agencies propose similar terms to require reporting of Sexual Violence and Sexual Harassment (SVSH policy) or other forms of harassment, UC is concerned that there would be a patchwork of possibly conflicting and burdensome requirements from agencies seeking to follow NSF's and NASA's example. UC first and foremost recommends consistency across federal grant-making agencies to avoid confusion about different reporting requirements.

NASA Response: NASA is carefully reviewing all comments it has received requesting conformity between its reporting requirements and those of NSF. In addition, we are coordinating our efforts through the White House National Science and Technology Joint Committee on Science and Technology Subcommittee on Coordinating Administrative Requirements for Research and the Subcommittee on Safe and Inclusive Research Environments to ensure NASA is proceeding in a coordinated manner with other agencies.

Comment 2: Timing of Notification. NASA's proposal requires the recipient's Authorized Organizational Representative (AOR) to submit a report within seven business days from the date of a finding/determination, the date of the placement of a (co-)PI on leave or the imposition of another administrative action. This timeline is both insufficient and inconsistent with NSF's term and condition, which provides ten days to submit the necessary report. A discrepancy between NASA's and NSF's reporting deadlines, as currently proposed, would be burdensome on IHEs that are already tasked with maintaining compliance with multiple and often conflicting agency requirements, and would increase the risk of errors and missed reporting deadlines by grantees. To promote compliance by all institutions that would be subject to the term and condition, UC recommends that NASA modify its reporting deadline to ten business days, consistent with NSF's current requirements.

NASA Response: NASA has revised the reporting requirement to allow recipients 10 business days to report from the date of a finding/determination, the date of the placement of a Co-I on leave or the imposition of another administrative action.

Comment 3: Role of Subrecipients. UC has concerns regarding the role of subrecipients in the proposed NASA reporting process. The proposed term states that the recipient agrees to insert the term in any subcontract involving a co-investigator, and the recipient will be responsible for ensuring that all reports, including those relating to co-investigators, comply with the term. This appears to imply that reports for co-investigators at subrecipient institutions must be reviewed and/or submitted by the recipient's AOR. Such a requirement would put the recipient institution in the position of not only having potentially inappropriate access to sensitive information, but also having to determine whether the subrecipient institution has an event triggering NASA notification, and whether it has properly complied with the subrecipient's own policies and procedures, with which the recipient would be unfamiliar. We are likewise concerned that the subrecipient would be required to submit such sensitive and premature information to primary awardees. We strongly urge NASA to revise this requirement to be consistent with the NSF process so that subrecipient institutions submit their own reports directly to NASA.

NASA Response: NASA agrees that the primary award recipient's responsibility should be limited to passing through the appropriate terms and conditions from the prime award for inclusion in the subaward. NASA has revised the term and condition to require the subrecipient's Authorized Organizational Representative to report notifications directly to NASA. The subrecipient must act in accordance with Title 2 Code of Federal Regulations, Section 200.331, Requirements for Pass-Through Entities.

Comment 4: Privacy. Reports of SVSH and assault potentially contain highly sensitive information not only about the respondent, but about the reporting parties and witnesses, who may be concerned about retaliation and other adverse effects on their careers. An effective SVSH investigation therefore requires impartiality, discretion and professionalism. These factors not only ensure a fair and thorough factual inquiry, but also protect the privacy, safety and reputations of all involved parties. The imperative of protecting privacy and respecting due process during an investigation is why UC is particularly concerned with the proposed requirement that universities report to NASA certain open investigations, *i.e.,* those where a (co-)PI has been put on leave during the course of the investigation. Such a requirement can compromise investigations, interfere with the rights of both the reporting party and the party under investigation, undermine due process, lead to misunderstandings of NASA's role in investigations and damage careers, including those of the (co-)PIs, co-workers and students.

NASA Response: NASA views one of the primary purposes of a recipient institution in taking an action such as placing an individual on administrative leave is to better ensure the safety, including psychological and physical safety, of the research environment and the academic community. In the interest of ensuring safe and inclusive research environments, NASA is confident that recipient institutions, including universities and other entities, which are committed to safety and inclusion, will continue to utilize these kinds of actions, when it is appropriate to do so.

NASA recognizes the sensitivity of the information that may be contained in the notifications and will take appropriate steps to manage such information consistent with the Privacy Act, the Freedom of Information Act and other applicable federal laws. Importantly, NASA makes it clear in its proposed term and condition that it does not require names other than those of the relevant PI or Co-I and that other names must not be included.

NASA also recognizes that, because of the sensitivity of the information contained in the notifications, there is a need to limit exposure of this information on grant management systems. NASA intends to follow the methodology of NSF in this regard, developing a secure mechanism by which the notifications will be routed directly to the NASA Office of Diversity and Equal Opportunity and limiting access to only those NASA personnel with an express need to know. NASA also has revised the term and condition to make clear to those submitting notifications not to include names other than the PI or Co-I. As part of the internal process to implement the term and condition, NASA will clearly note in its records when a recipient institution finds that an alleged harasser did not engage in harassment.

Comment 5: Family Educational Rights and Privacy Act of 1974 (FERPA). In addition, the university must comply with FERPA, a federal law that protects the privacy of student education records. In the *Reporting Requirements Regarding Findings of Harassment, Sexual Harassment, Other Forms of Harassment, or Sexual Assault* we noted that footnote 1 of subsection (e) expressly states that the identification of the complainant or other individuals involved in the matter must not be included in the report, which protects the privacy of the complaining party, including students. However, the proposed NASA reporting obligations could conflict with FERPA in the uncommon instance when the co-(PI) alleged to have engaged in harassment is a graduate student.

NASA Response: NASA agrees that in a rare circumstance that a PI or co-I is a student subject to FERPA, this reporting requirement could conflict with FERPA's statutory prohibitions. Accordingly, footnote four was adjusted to note that institutions should comply with FERPA in these circumstances. NASA recognizes the sensitivity of the information that may be contained in the notifications and will take appropriate steps to manage such information consistent with the Privacy Act of 1974, the Freedom of Information Act and other applicable federal laws. Importantly, NASA makes it clear in its proposed term and condition that it does not require names other than those of the relevant PI or Co-I and that other names must not be included. With regard to state laws and regulations, many state privacy laws contain language allowing for information disclosure to federal agencies, and if there were to be a conflict, traditional preemption doctrines would apply

Comment 6: Reports via Email. NASA's proposed term would also require the recipient's AOR to submit the necessary reports to NASA via email. Given the sensitive nature of the information contained in these reports, UC is concerned that this method of transmittal is not secure and may increase the risk of submission of spurious, malicious or unauthorized reports (*i.e.,* not by the recipient's recognized AOR). UC recommends that reports be transmitted through a more secure portal, consistent with the NSF procedures UC also encourages NASA to ensure that there is a mechanism to verify that reports are submitted by a valid AOR from the recipient institution.

NASA Response: NASA will develop a secure mechanism consistent with federal privacy law by which the notifications will be routed directly to the Office of Diversity and Equal Opportunity, which will limit access to only those NASA personnel with an express need to know. NASA also has revised the term and condition to make clear to those submitting notifications not to include names other than the PI or Co-I.

Comment 7: Appropriate Handling, Storage and Maintenance of Confidentiality. Grantee organizations need assurance that NASA will appropriately handle, store and maintain the confidentiality of such sensitive information, and NASA should clarify whether the information would be protected from potential subpoenas, Freedom of Information Act requests or any other legal action.

NASA Response: NASA will develop a secure mechanism consistent with federal privacy law by which the notifications will be routed directly to the Office of Diversity and Equal Opportunity, which will limit access to only those NASA personnel with an express need to know. NASA also has revised the term and condition to make clear to those submitting notifications not to include names other than the PI or Co-I. As to potential subpoenas, Freedom of Information Act requests or any other legal action, again, NASA will act in accord with all applicable law.

Comment 8: Clarity/Definitions. NASA's proposed term makes general references to ''statutes'' and ''regulations.'' UC requests clarification as to whether the reportable findings are limited to categories protected under federal civil rights law or whether findings of discrimination and harassment expressly protected by state laws and regulations should also be reported.

NASA Response: NASA has revised the term and condition to add a definitions section. NASA defines finding/determination as ''The final disposition of a matter involving sexual harassment or other form of harassment under organizational policies and processes, to include the exhaustion of permissible appeals exercised by the PI or Co-I, or a conviction of a sexual offense in a criminal court of law.'' The reporting requirement is limited to only federal laws over which NASA has jurisdiction.

Comment 9: Impact on Project Members/Reporting. Consequences for violations of SVSH policy or other harassment policies are determined at the end of the investigation when the preponderance of the evidence shows the employee violated policy. UC is concerned that NASA's reporting requirement, as proposed, could irreparably damage NASA-funded projects as well as the reputations of individuals involved—particularly if an allegation of harassment or assault is not substantiated. Participants on a NASA project, including postdoctoral researchers, staff and students, may experience adverse impacts on their current and future professional endeavors and livelihoods. As a result, NASA project members may be reluctant to report harassment if they believe a report could disrupt or terminate their project. Further, UC is concerned that the term does not address NASA's process in those situations in which a report is made concerning allegations that are later found to be unsubstantiated. In such a circumstance, UC would expect that names of exonerated PIs or Co-Is would be removed from any allegation-related internal NASA lists or databases on which they had appeared.

NASA Response: Civil rights laws and their implementing regulations protect NASA project members who report harassment from retaliation. NASA's Office of Diversity and Equal Opportunity investigates complaints of retaliation. As to removing names of PIs or Co-Is ultimately found not to have engaged in harassment in violation of a recipient's policy, NASA will clearly note in its records when an alleged harasser is found not to have harassed, as it has an obligation to ensure the accuracy of our records.

University of Wisconsin-Madison

Comment 1: NASA is proposing that reports be submitted ''within seven business days from the date of the finding/determination, or the date of the placement of a PI or Co-I by the recipient on administrative leave or the imposition of an administrative action.'' Originally, NSF proposed that reports be submitted within seven business days. Ultimately, based on public comments, NSF decided to allow ten business days to report, which is a more reasonable period of time for institutions to convey information. Submission necessitates coordination between multiple offices, which takes time.

NASA Response: NASA has revised the reporting requirement to allow recipients 10 business days to report from the date of a finding/determination, the date of the placement of a Co-I on leave or the imposition of another administrative action.

Comment 2: NASA is requesting that reports be sent to an email address. However, email may not be a secure form of communication. Given the sensitive nature of the reports, we recommend that NASA consider

creating a secure website to receive these reports. Again, in response to public comments, NSF created a secure website for reporting, and we ask NASA to do the same. NASA's expectations about what should occur if a reportable instance happens at a subrecipient institution is not clear. The Notice reads: ''(d) Recipient agrees to insert the substance of this term and condition in any subaward/subcontract involving a co-investigator.

Recipient will be responsible for ensuring that all reports, including those related to co-investigators, comply with this term and condition.'' This could mean a number of different things, including:

a. The subrecipient institution is responsible for submitting reports to NASA, or

b. The subrecipient institution must provide information to the recipient, who ensures that all required data elements are included prior to the recipient submitting the report, or

c. The subrecipient institution must provide information to the recipient, who ensures that all required data elements are included prior to the subrecipient submitting the report, or

d. The subrecipient institution must provide a certification to the recipient institution that, should the subrecipient make a report to NASA, it will do so in compliance with the reporting requirements.

As written, the language does not provide clear direction to the recipient and subrecipient. An area of concern is privacy. Should an administrative action be taken or administrative leave imposed in anticipation of investigating an allegation, the investigation may result in a conclusion that a violation did not occur. In this case, an individual's reputation may be harmed if entities other than those with a need to know are privy to the information. NASA should clarify expectations and responsibilities for both the recipient and subrecipient and do so in a manner that protects privacy. To align with NSF, we recommend that NASA consider requiring that reports be submitted directly from the subrecipient to NASA.

NASA Response: In response to the recommendation that NASA create a secure website to receive these reports, NASA has developed a secure mechanism by which the notifications will be routed directly to the Office of Diversity and Equal Opportunity, which will limit access to only those NASA personnel with an express need to know. NASA also has revised the term and condition to make clear to those submitting notifications not to include names other than the PI or Co-I. In response to the recommendation that NASA should clarify expectations and responsibilities for both the recipient and subrecipient, NASA has revised the term and condition to require the Authorized Organizational Representative of the subrecipient institution to notify NASA directly.

Cheryl Parker,

Federal Register Liaison Officer.

[FR Doc. 2020–04815 Filed 3–9–20; 8:45 am]

BILLING CODE 7510–13–P

NATIONAL SCIENCE FOUNDATION

Proposal Review Panel for Physics; Notice of Meeting

In accordance with the Federal Advisory Committee Act (Pub. L. 92–463, as amended), the National Science Foundation (NSF) announces the following meeting:

Name and Committee Code: Proposal Review Panel for the Division of Physics (1208)—PFC JILA Site Visit.

Date and Time: April 27, 2020; 8:30 a.m.–7:00 p.m., April 28, 2020; 8:30 a.m.–4:00 p.m.

Place: University of Colorado at Boulder, 440 UCB, Boulder, CO 80309.

Type of Meeting: Part-Open.

Contact Person: Jean Cottam-Allen, Program Director for Physics Frontier Centers, Division of Physics; National Science Foundation, 2415 Eisenhower Avenue, Room 9235, Alexandria, VA 22314; Telephone: (703) 292–8783.

Purpose of Meeting: Site visit to provide an evaluation of the progress of the projects at the host site for the Division of Physics at the National Science Foundation.

Agenda

April 27, 2020; 8:30 a.m.–7:00 p.m.

8:30 a.m.–12:00 p.m.
Panel Session: Presentations on Center Overview, Management and Science
12:00 p.m.–1:30 p.m.
Lunch with Graduate Students and Postdocs
1:30 p.m.–4:00 p.m.
Panel Session: Continued Science Presentations, Education and Outreach
4:00 p.m.–5:00 p.m.
Executive Session—CLOSED SESSION
5:00 p.m.–7:00 p.m.
Poster Session
7:00 p.m.
Executive Session—CLOSED SESSION

April 28, 2020; 8:30 a.m.–4:00 p.m.

8:30 a.m.–11:00 a.m.
Meeting with University Administrators, Discussion with Center Directors
11:00 a.m.–3:00 p.m.
Executive Session—CLOSED SESSION
3:00 p.m.–4:00 p.m.
Closeout Session with Center Directors

Reason for Closing: Topics to be discussed and evaluated during closed portions of the site review will include information of a proprietary or confidential nature, including technical information and information on personnel. These matters are exempt under 5 U.S.C. 552b(c), (4) and (6) of the Government in the Sunshine Act.

Dated: March 5, 2020.

Crystal Robinson,

Committee Management Officer.

[FR Doc. 2020–04845 Filed 3–9–20; 8:45 am]

BILLING CODE 7555–01–P

NATIONAL SCIENCE FOUNDATION

Proposal Review Panel for Physics; Notice of Meeting

In accordance with the Federal Advisory Committee Act (Pub. L. 92–463, as amended), the National Science Foundation (NSF) announces the following meeting:

Name and Committee Code: Proposal Review Panel for the Division of Physics (1208)—PFC CUA Site Visit.

Date and Time: April 30, 2020; 8:30 a.m.–7:00 p.m.; May 1, 2020; 8:30 a.m.–4:00 p.m.

Place: Massachusetts Institute of Technology, 77 Massachusetts Avenue, Cambridge, MA 02139–4307.

Type of Meeting: Part-Open.

Contact Person: Jean Cottam-Allen, Program Director for Physics Frontier Centers, Division of Physics, National Science Foundation, 2415 Eisenhower Avenue, Room 9235, Alexandria, VA 22314; Telephone: (703) 292–8783.

Purpose of Meeting: Site visit to provide an evaluation of the progress of the projects at the host site for the Division of Physics at the National Science Foundation.

Agenda

April 30, 2020; 8:30 a.m.–7:00 p.m.

8:30 a.m.–12:00 p.m.
Panel Session: Presentations on Center Overview, Management and Science
12:00 p.m.–1:30 p.m.
Lunch with Graduate Students and Postdocs

1:30 p.m.–4:00 p.m.
Panel Session: Continued Science Presentations, Education and Outreach
4:00 p.m.–5:00 p.m.
Executive Session—Closed Session
5:00 p.m.–7:00 p.m.
Poster Session
7:00 p.m.
Executive Session—Closed Session

May 1, 2020; 8:30 a.m.–4:00 p.m.

8:30 a.m.–11:00 a.m.
Meeting with University Administrators; Discussion with Center Directors
11:00 a.m.–3:00 p.m.
Executive Session—Closed Session
3:00 p.m.–4:00 p.m.
Closeout Session with Center Directors

Reason for Closing: Topics to be discussed and evaluated during closed portions of the site review will include information of a proprietary or confidential nature, including technical information and information on personnel. These matters are exempt under 5 U.S.C. 552b(c), (4) and (6) of the Government in the Sunshine Act.

Dated: March 5, 2020.

Crystal Robinson,

Committee Management Officer.

[FR Doc. 2020–04846 Filed 3–9–20; 8:45 am]

BILLING CODE 7555–01–P

NATIONAL SCIENCE FOUNDATION

Proposal Review Panel for Physics; Notice of Meeting

In accordance with the Federal Advisory Committee Act (Pub. L. 92–463, as amended), the National Science Foundation (NSF) announces the following meeting:

Name and Committee Code: Proposal Review Panel for the Division of Physics (1208)—PFC CPBF Site Visit.

Date and Time: April 21, 2020; 8:30 a.m.–7:00 p.m., April 22, 2020; 8:30 a.m.–4:00 p.m.

Place: Princeton University, 1 Nassau Hall, Princeton, NJ 08544.

Type of Meeting: Part-Open.

Contact Person: Jean Cottam-Allen, Program Director for Physics Frontier Centers, Division of Physics; National Science Foundation, 2415 Eisenhower Avenue, Room 9235, Alexandria, VA 22314; Telephone: (703) 292–8783.

Purpose of Meeting: Site visit to provide an evaluation of the progress of the projects at the host site for the Division of Physics at the National Science Foundation.

Agenda

April 21, 2020; 8:30 a.m.–7:00 p.m.

8:30 a.m.–12:00 p.m.
Panel Session: Presentations on Center Overview, Management and Science
12:00 p.m.–1:30 p.m.
Lunch with Graduate Students and Postdocs
1:30 p.m.–4:00 p.m.
Panel Session: Continued Science Presentations, Education and Outreach
4:00 p.m.–5:00 p.m.
Executive Session—CLOSED SESSION
5:00 p.m.–7:00 p.m.
Poster Session
7:00 p.m.
Executive Session—CLOSED SESSION

April 22, 2020; 8:30 a.m.–4:00 p.m.

8:30 a.m.–11:00 a.m.
Meeting with University Administrators, Discussion with Center Directors
11:00 a.m.–3:00 p.m.
Executive Session—CLOSED SESSION
3:00 p.m.–4:00 p.m.
Closeout Session with Center Directors

Reason for Closing: Topics to be discussed and evaluated during closed portions of the site review will include information of a proprietary or confidential nature, including technical information and information on personnel. These matters are exempt under 5 U.S.C. 552b(c), (4) and (6) of the Government in the Sunshine Act.

Dated: March 5, 2020.

Crystal Robinson,

Committee Management Officer.

[FR Doc. 2020–04844 Filed 3–9–20; 8:45 am]

BILLING CODE 7555–01–P

NUCLEAR REGULATORY COMMISSION

[Docket Nos. STN 50–528, STN 50–529, STN 50–530, and 72–44; NRC–2019–0214]

In the Matter of Arizona Public Service Company; El Paso Electric Company; Palo Verde Nuclear Generating Station, Units 1, 2, and 3, and Independent Spent Fuel Storage Installation

AGENCY: Nuclear Regulatory Commission.

ACTION: Indirect transfer of licenses; order.

SUMMARY: The U.S. Nuclear Regulatory Commission (NRC) is issuing an Order approving the application filed by El Paso Electric Company (EPE) on August 13, 2019. The application seeks an NRC order consenting to the indirect transfer of EPE's possession-only non-operating interests in Renewed Facility Operating License Nos. NPF–41, NPF–51, and NPF–74 for the Palo Verde Nuclear Generating Station (Palo Verde), Units 1, 2, and 3, respectively, and the general license for the Palo Verde Independent Spent Fuel Storage Installation (ISFSI) (together, the Facility). No physical changes to the Facility or operational changes were proposed in the application.

DATES: The Order was issued on March 5, 2020, and is effective for one year.

ADDRESSES: Please refer to Docket ID NRC–2019–0214 when contacting the NRC about the availability of information regarding this document. You may obtain publicly-available information related to this document using any of the following methods:

- *Federal Rulemaking Website:* Go to *https://www.regulations.gov* and search for Docket ID NRC–2019–0214. Address questions about NRC docket IDs in *Regulations.gov* to Jennifer Borges; telephone: 301–287–9127; email: *Jennifer.Borges@nrc.gov.* For technical questions, contact the individual listed in the **FOR FURTHER INFORMATION CONTACT** section of this document.
- *NRC's Agencywide Documents Access and Management System (ADAMS):* You may obtain publicly-available documents online in the ADAMS Public Documents collection at *https://www.nrc.gov/reading-rm/adams.html.* To begin the search, select ''Begin Web-based ADAMS Search.'' For problems with ADAMS, please contact the NRC's Public Document Room (PDR) reference staff at 1–800–397–4209, 301–415–4737, or by email to *pdr.resource@nrc.gov.* The license transfer Order and the NRC safety evaluation supporting the staff's findings are available at ADAMS Package Accession No. ML20038A226.
- *NRC's PDR:* You may examine and purchase copies of public documents at the NRC's PDR, Room O1–F21, One White Flint North, 11555 Rockville Pike, Rockville, Maryland 20852.

FOR FURTHER INFORMATION CONTACT: Siva P. Lingam, Office of Nuclear Reactor Regulation, U.S. Nuclear Regulatory Commission, Washington, DC 20555–0001; telephone: 301–415–1564, email: *Siva.Lingam@nrc.gov.*

SUPPLEMENTARY INFORMATION: The text of the Order is attached.

Dated at Rockville, Maryland, this 5th day of March, 2020.

For the Nuclear Regulatory Commission.

Siva P. Lingam,

Project Manager, Plant Licensing Branch IV, Division of Operating Reactor Licensing, Office of Nuclear Reactor Regulation.

Attachment—Order Approving Indirect Transfer of Licenses

United States of America

Nuclear Regulatory Commission

In the Matter of: Arizona Public Service Company, El Paso Electric Company; Palo Verde Nuclear Generating Station, Units 1, 2, 3, and Independent Spent Fuel Storage Installation.

Docket Nos. STN 50–528, STN 50–529, STN 50–530, and 72–44. License Nos. NPF–41, NPF–51, and NPF–74.

Order Approving Indirect Transfer of Licenses

I

Arizona Public Service Company (APS) is the licensed operator and a licensed co-owner of Renewed Facility Operating License Nos. NPF–41, NPF–51, and NPF–74 for the Palo Verde Nuclear Generating Station (Palo Verde), Units 1, 2, and 3, respectively, and the general license for the Palo Verde Independent Spent Fuel Storage Installation (ISFSI). Palo Verde is located in Maricopa County, Arizona. The other licensed co-owners (tenants-in-common), Salt River Project Agricultural Improvement and Power District; Southern California Edison Company; El Paso Electric Company; Public Service Company of New Mexico; Southern California Public Power Authority; and Los Angeles Department of Water and Power, hold possession-only rights for these licenses (*i.e.,* they are not licensed to operate the facility).

II

By application dated August 13, 2019 (Agencywide Documents Access and Management System (ADAMS) Accession No. ML19225D197), El Paso Electric Company (EPE) requested, pursuant to Title 10 of the *Code of Federal Regulations* (10 CFR) Sections 50.80 and 72.50, that the U.S. Nuclear Regulatory Commission (NRC, the Commission) consent to the indirect transfer of EPE's possession-only non-operating interests in Renewed Facility Operating License Nos. NPF–41, NPF–51, and NPF–74 for Palo Verde Units 1, 2, and 3, respectively, and the general license for the Palo Verde ISFSI to IIF US Holding 2 LP.

According to the application, EPE currently owns a 15.8 percent tenant-in-common interest and holds possession-only rights in the NRC licenses. The proposed indirect license transfer would result from IIF US Holding 2 LP indirectly acquiring 100 percent of the shares in EPE. APS would continue to operate each of the Palo Verde units and the ISFSI. APS owns a 29.1 percent tenant-in-common interest and holds both operating and possession rights in the NRC licenses. Further, APS operates each of the Palo Verde units and the ISFSI pursuant to the operating rights granted to it under the license of each Palo Verde unit. The remaining tenant-in-common co-owners that hold possession-only rights in the NRC licenses are: Salt River Project Agricultural Improvement and Power District (17.49 percent); Southern California Edison Company (15.8 percent); Public Service Company of New Mexico (10.2 percent); Southern California Public Power Authority (5.91 percent); and Los Angeles Department of Water and Power (5.7 percent). The proposed transaction implicates only an indirect change in control over EPE's possession-only rights in the NRC licenses. The proposed transaction would not involve or implicate any change in EPE's rights and obligations under any of the NRC licenses, nor would it implicate APS's or any possession-only co-owners' rights and obligations under any of the NRC licenses.

No physical changes or operational changes are being proposed in the application.

A notice of the application and opportunity to comment, request a hearing, and petition for leave to intervene on the application was published in the **Federal Register** on October 28, 2019 (84 FR 57774). In response, on November 18, 2019, Public Citizen, Inc. filed a hearing request. The hearing request is currently pending before the Commission. The NRC did not receive any comments on the application.

Under 10 CFR 50.80 and 10 CFR 72.50, no license for a production or utilization facility or ISFSI, or any right thereunder, shall be transferred, either voluntarily or involuntarily, directly or indirectly, through transfer of control of the license to any person, unless the Commission gives its consent in writing. Upon review of the information in the application, and other information before the Commission, the NRC staff has determined that EPE can indirectly transfer its 15.8 percent tenant-in-common interest and possession-only rights in the NRC licenses to IIF US Holding 2 LP. The proposed transferee is qualified to be the indirect holder of the licenses and the indirect transfer of the licenses is otherwise consistent with applicable provisions of law, regulations, and orders issued by the Commission pursuant thereto, subject to the condition set forth below.

The findings set forth above are supported by an NRC staff safety evaluation dated the same date as this Order, which is available at ADAMS Accession No. ML20038A235.

III

Accordingly, pursuant to Sections 161b, 161i, and 184 of the Atomic Energy Act of 1954, as amended, 42 U.S.C. 2201(b), 2201(i), and 2234; and 10 CFR 50.80 and 10 CFR 72.50, *it is hereby ordered* that the application regarding the proposed indirect license transfer is approved for Palo Verde Units 1, 2, and 3, and the ISFSI, subject to the following condition.

1. The NRC staff's approval of this license transfer is subject to the Commission's authority to rescind, modify, or condition the approved transfer based on the outcome of any post-effectiveness hearing on the license transfer application.

It is further ordered that after receipt of all required regulatory approvals of the proposed indirect transfer action, the applicant shall inform the Director of the Office of Nuclear Reactor Regulation in writing of such receipt no later than 2 business days prior to the date of the closing of the indirect transfer. Should the proposed indirect transfer not be completed within 1 year from the date of this Order, this Order shall become null and void, provided, however, upon written application and for good cause shown, such date may be extended by order. The condition of this Order may be amended upon application by the applicants and approval by the Director of the Office of Nuclear Reactor Regulation.

This Order is effective upon issuance.

For further details with respect to this Order, see the application dated August 13, 2019, and the NRC safety evaluation dated the same date of this Order, which are available for public inspection at the NRC's Public Document Room (PDR), located at One White Flint North, Public File Area 01 F21, 11555 Rockville Pike (first floor), Rockville, Maryland. Publicly available documents created or received at the NRC are accessible electronically through ADAMS in the NRC Library at *https://www.nrc.gov/reading-rm/adams.html.* Persons who do not have access to ADAMS or who encounter problems accessing the documents located in ADAMS, should contact the NRC PDR reference staff by telephone at 1–800–397–4209 or 301–415–4737, or by email to *pdr.resource@nrc.gov.*

Dated at Rockville, Maryland this 5th day of March, 2020.

For the Nuclear Regulatory Commission.

Craig G. Erlanger,

Director, Division of Operating Reactor Licensing, Office of Nuclear Reactor Regulation.

[FR Doc. 2020–04842 Filed 3–9–20; 8:45 am]

BILLING CODE 7590–01–P

NUCLEAR REGULATORY COMMISSION

[Docket No. 052–00025; NRC–2008–0252]

Vogtle Electric Generating Plant, Unit 3

AGENCY: Nuclear Regulatory Commission.

ACTION: License amendment application; opportunity to comment, request a hearing, and petition for leave to intervene.

SUMMARY: The U.S. Nuclear Regulatory Commission (NRC) is considering issuance of an amendment and exemption to Combined License (NPF–91), issued to Southern Nuclear Operating Company, Inc. (SNC), and Georgia Power Company, Oglethorpe Power Corporation, MEAG Power SPVM, LLC, MEAG Power SPVJ, LLC, MEAG Power SPVP, LLC, Authority of Georgia, and the City of Dalton, Georgia (collectively, SNC), for construction and

operation of the Vogtle Electric Generating Plant (VEGP), Unit 3, located in Burke County, Georgia.

DATES: Submit comments by April 9, 2020. Comments received after this date will be considered if it is practical to do so, but the Commission is able to ensure consideration only for comments received before this date. A request for a hearing or petition for leave to intervene must be filed by May 11, 2020.

ADDRESSES: You may submit comments by any of the following methods:

- *Federal Rulemaking Website:* Go to *https://www.regulations.gov* and search for Docket ID NRC–2008–0252. Address questions about NRC docket IDs in *Regulations.gov* to Jennifer Borges; telephone: 301–287–9127; email: *Jennifer.Borges@nrc.gov.* For technical questions, contact the individual listed in the **FOR FURTHER INFORMATION CONTACT** section of this document.
- *Mail comments to:* Office of Administration, Mail Stop: TWFN–7–A60M, U.S. Nuclear Regulatory Commission, Washington, DC 20555–0001, ATTN: Program Management, Announcements and Editing Staff.

For additional direction on obtaining information and submitting comments, see ''Obtaining Information and Submitting Comments'' in the **SUPPLEMENTARY INFORMATION** section of this document.

FOR FURTHER INFORMATION CONTACT: Cayetano Santos, Office of Nuclear Reactor Regulation, U.S. Nuclear Regulatory Commission, Washington, DC 20555–000; telephone: 301–415–7270; email: *Cayetano.Santos@NRC.GOV.*

SUPPLEMENTARY INFORMATION:

I. Obtaining Information and Submitting Comments

A. Obtaining Information

Please refer to Docket ID NRC–2008–0252 when contacting the NRC about the availability of information for this action. You may obtain publicly-available information related to this action by any of the following methods:

- *Federal Rulemaking Website:* Go to *https://www.regulations.gov* and search for Docket ID NRC–2008–0252.
- *NRC's Agencywide Documents Access and Management System (ADAMS):* You may obtain publicly-available documents online in the ADAMS Public Documents collection at *https://www.nrc.gov/reading-rm/adams.html.* To begin the search, select ''Begin Web-based ADAMS Search.'' For problems with ADAMS, please contact the NRC's Public Document Room (PDR) reference staff at 1–800–397–4209, 301–415–4737, or by email to *pdr.resource@nrc.gov.* The application for amendment, dated February 7, 2020 is available in ADAMS under Accession No. ML20038A939.
- *NRC's PDR:* You may examine and purchase copies of public documents at the NRC's PDR, Room O1–F21, One White Flint North, 11555 Rockville Pike, Rockville, Maryland 20852.

B. Submitting Comments

Please include Docket ID NRC–2008–0252 in your comment submission.

The NRC cautions you not to include identifying or contact information that you do not want to be publicly disclosed in your comment submission. The NRC will post all comment submissions at *https://www.regulations.gov* as well as enter the comment submissions into ADAMS. The NRC does not routinely edit comment submissions to remove identifying or contact information.

If you are requesting or aggregating comments from other persons for submission to the NRC, then you should inform those persons not to include identifying or contact information that they do not want to be publicly disclosed in their comment submission. Your request should state that the NRC does not routinely edit comment submissions to remove such information before making the comment submissions available to the public or entering the comment submissions into ADAMS.

II. Introduction

The NRC is considering issuance of an amendment to facility Operating License No. NPF–91, issued to SNC for operation of the VEGP Unit 3, located in Burke County, Georgia.

The proposed amendment would revise combined license (COL) Appendix C (and plant-specific Tier 1) and corresponding Tier 2* and Tier 2 information in the Updated Final Safety Analyses Report (UFSAR). Specifically, the request proposes to modify the north-south minimum seismic gap requirements above grade between the nuclear island and the annex building west of Column Line I from elevation 141 feet through 154 feet to accommodate as-built localized nonconformances. Because, this proposed change requires a departure from Tier 1 information in the Westinghouse Electric Company's AP1000 Design Control Document (DCD), the licensee also requested an exemption from the requirements of the Generic DCD Tier 1 in accordance with section 52.63(b)(1) of title 10 of the *Code of Federal Regulations* (10 CFR).

Before any issuance of the proposed license amendment, the NRC will need to make the findings required by the Atomic Energy Act of 1954, as amended (the Act), and NRC's regulations.

The NRC has made a proposed determination that the license amendment request involves no significant hazards consideration. Under the NRC's regulations in 10 CFR 50.92, this means that operation of the facility in accordance with the proposed amendment would not (1) involve a significant increase in the probability or consequences of an accident previously evaluated; or (2) create the possibility of a new or different kind of accident from any accident previously evaluated; or (3) involve a significant reduction in a margin of safety. As required by 10 CFR 50.91(a), the licensee has provided its analysis of the issue of no significant hazards consideration, which is presented below:

1. Does the proposed amendment involve a significant increase in the probability or consequences of an accident previously evaluated?

Response: No.

The proposed change would revise the COL and licensing basis for VEGP Unit 3 to locally modify the seismic gap requirement above grade between the nuclear island and portions of the annex building adjacent to the nuclear island.

The proposed change to the gap requirement does not affect the structural integrity requirements on seismic Category I structures. The safety functions of the seismic Category I structures are not impacted. The performance of the seismic Category II structures is not impacted and will not degrade the function of a seismic Category I structure, system, or component (SSC). The proposed change does not involve a change to the design of the nuclear island or annex building, and no SSC design or function is affected. No design or safety analysis is affected. The proposed change does not affect any accident initiating event or component failure, thus the probabilities of the accidents previously evaluated are not affected. No function used to mitigate a radioactive material release and no radioactive material release source term is involved, thus the radiological releases in the accident analyses are not affected.

Therefore, the proposed amendment does not involve a significant increase in the probability or consequences of an accident previously evaluated.

2. Does the proposed amendment create the possibility of a new or different kind of accident from any accident previously evaluated?

Response: No.

The proposed change would revise the COL and licensing basis for VEGP Unit 3 to locally modify the seismic gap requirement above grade between the nuclear island and

portions of the annex building adjacent to the nuclear island.

The proposed change does not involve a change to the design of the nuclear island or annex building, and no SSC design or function is affected. The performance of the seismic Category II structures is not impacted and will not degrade the function of a seismic Category I SSC. The proposed change would not introduce a new failure mode, fault or sequence of events that could result in a radioactive material release.

Therefore, the proposed amendment does not create the possibility of a new or different kind of accident from any accident previously evaluated.

3. Does the proposed amendment involve a significant reduction in a margin of safety?

Response: No.

The proposed change would revise the COL and licensing basis for VEGP Unit 3 to locally modify the seismic gap requirement above grade between the nuclear island and portions of the annex building adjacent to the nuclear island.

The proposed change does not involve a change to the design of the nuclear island or annex building, and no SSC design or function is affected. The performance of the seismic Category II structures is not impacted and will not degrade the function of a seismic Category I SSC, and would not affect any design parameter, function or analysis. There would be no change to an existing design basis, design function, regulatory criterion, or analysis. No safety analysis or design basis acceptance limit/criterion is involved.

Therefore, the proposed amendment does not involve a significant reduction in a margin of safety.

The NRC staff has reviewed the licensee's analysis and, based on this review, it appears that the three standards of 10 CFR 50.92(c) are satisfied. Therefore, the NRC staff proposes to determine that the license amendment request involves no significant hazards consideration.

The NRC is seeking public comments on this proposed determination that the license amendment request involves no significant hazards consideration. Any comments received within 30 days after the date of publication of this notice will be considered in making any final determination.

Normally, the Commission will not issue the amendment until the expiration of 60 days after the date of publication of this notice. The Commission may issue the license amendment before expiration of the 60-day notice period if the Commission concludes the amendment involves no significant hazards consideration. In addition, the Commission may issue the amendment prior to the expiration of the 30-day comment period should circumstances change during the 30-day comment period such that failure to act in a timely way would result, for example, in derating or shutdown of the facility. Should the Commission take action prior to the expiration of either the comment period or the notice period, the Commission will publish a notice of issuance in the **Federal Register**. Should the Commission make a final no significant hazards consideration determination, any hearing will take place after issuance. The Commission expects that the need to take this action will occur very infrequently.

III. Opportunity To Request a Hearing and Petition for Leave To Intervene

Within 60 days after the date of publication of this notice, any persons (petitioner) whose interest may be affected by this action may file a request for a hearing and a petition to intervene (petition) with respect to the action. Petitions shall be filed in accordance with the Commission's ''Agency Rules of Practice and Procedure'' in 10 CFR part 2. Interested persons should consult a current copy of 10 CFR 2.309. The NRC's regulations are accessible electronically from the NRC Library on the NRC's website at *https://www.nrc.gov/reading-rm/doc-collections/cfr/.* Alternatively, a copy of the regulations is available at the NRC's Public Document Room, located at One White Flint North, Room O1–F21, 11555 Rockville Pike (first floor), Rockville, Maryland 20852. If a petition is filed, the Commission or a presiding officer will rule on the petition and, if appropriate, a notice of a hearing will be issued.

As required by 10 CFR 2.309(d) the petition should specifically explain the reasons why intervention should be permitted with particular reference to the following general requirements for standing: (1) The name, address, and telephone number of the petitioner; (2) the nature of the petitioner's right to be made a party to the proceeding; (3) the nature and extent of the petitioner's property, financial, or other interest in the proceeding; and (4) the possible effect of any decision or order which may be entered in the proceeding on the petitioner's interest.

In accordance with 10 CFR 2.309(f), the petition must also set forth the specific contentions which the petitioner seeks to have litigated in the proceeding. Each contention must consist of a specific statement of the issue of law or fact to be raised or controverted. In addition, the petitioner must provide a brief explanation of the bases for the contention and a concise statement of the alleged facts or expert opinion which support the contention and on which the petitioner intends to rely in proving the contention at the hearing. The petitioner must also provide references to the specific sources and documents on which the petitioner intends to rely to support its position on the issue. The petition must include sufficient information to show that a genuine dispute exists with the applicant or licensee on a material issue of law or fact. Contentions must be limited to matters within the scope of the proceeding. The contention must be one which, if proven, would entitle the petitioner to relief. A petitioner who fails to satisfy the requirements at 10 CFR 2.309(f) with respect to at least one contention will not be permitted to participate as a party.

Those permitted to intervene become parties to the proceeding, subject to any limitations in the order granting leave to intervene, and have the opportunity to participate fully in the conduct of the hearing with respect to resolution of that person's admitted contentions consistent with the NRC's regulations, policies, and procedures.

Petitions must be filed no later than 60 days from the date of publication of this notice. Petitions and motions for leave to file new or amended contentions that are filed after the deadline will not be entertained absent a determination by the presiding officer that the filing demonstrates good cause by satisfying the three factors in 10 CFR 2.309(c)(1)(i) through (iii). The petition must be filed in accordance with the filing instructions in the ''Electronic Submissions (E-Filing)'' section of this document.

If a hearing is requested, and the Commission has not made a final determination on the issue of no significant hazards consideration, the Commission will make a final determination on the issue of no significant hazards consideration. The final determination will serve to decide when the hearing is held. If the final determination is that the amendment request involves no significant hazards consideration, the Commission may issue the amendment and make it immediately effective, notwithstanding the request for a hearing. Any hearing held would take place after issuance of the amendment. If the final determination is that the amendment request involves a significant hazards consideration, then any hearing held would take place before the issuance of any amendment unless the Commission finds an imminent danger to the health or safety of the public, in which case it will issue an appropriate order or rule under 10 CFR part 2.

A State, local governmental body, Federally-recognized Indian Tribe, or

agency thereof, may submit a petition to the Commission to participate as a party under 10 CFR 2.309(h)(1). The petition should state the nature and extent of the petitioner's interest in the proceeding. The petition should be submitted to the Commission no later than 60 days from the date of publication of this notice. The petition must be filed in accordance with the filing instructions in the ''Electronic Submissions (E-Filing)'' section of this document, and should meet the requirements for petitions set forth in this section, except that under 10 CFR 2.309(h)(2) a State, local governmental body, or Federally-recognized Indian Tribe, or agency thereof does not need to address the standing requirements in 10 CFR 2.309(d) if the facility is located within its boundaries. Alternatively, a State, local governmental body, Federally-recognized Indian Tribe, or agency thereof may participate as a non-party under 10 CFR 2.315(c).

If a hearing is granted, any person who is not a party to the proceeding and is not affiliated with or represented by a party may, at the discretion of the presiding officer, be permitted to make a limited appearance pursuant to the provisions of 10 CFR 2.315(a). A person making a limited appearance may make an oral or written statement of his or her position on the issues but may not otherwise participate in the proceeding. A limited appearance may be made at any session of the hearing or at any prehearing conference, subject to the limits and conditions as may be imposed by the presiding officer. Details regarding the opportunity to make a limited appearance will be provided by the presiding officer if such sessions are scheduled.

IV. Electronic Submissions (E-Filing)

All documents filed in NRC adjudicatory proceedings, including a request for hearing and petition for leave to intervene (petition), any motion or other document filed in the proceeding prior to the submission of a request for hearing or petition to intervene, and documents filed by interested governmental entities that request to participate under 10 CFR 2.315(c), must be filed in accordance with the NRC's E-Filing rule (72 FR 49139; August 28, 2007, as amended at 77 FR 46562; August 3, 2012). The E-Filing process requires participants to submit and serve all adjudicatory documents over the internet, or in some cases to mail copies on electronic storage media. Detailed guidance on making electronic submissions may be found in the Guidance for Electronic Submissions to the NRC and on the NRC website at *https://www.nrc.gov/site-help/e-submittals.html.* Participants may not submit paper copies of their filings unless they seek an exemption in accordance with the procedures described below.

To comply with the procedural requirements of E-Filing, at least 10 days prior to the filing deadline, the participant should contact the Office of the Secretary by email at *hearing.docket@nrc.gov,* or by telephone at 301–415–1677, to (1) request a digital identification (ID) certificate, which allows the participant (or its counsel or representative) to digitally sign submissions and access the E-Filing system for any proceeding in which it is participating; and (2) advise the Secretary that the participant will be submitting a petition or other adjudicatory document (even in instances in which the participant, or its counsel or representative, already holds an NRC-issued digital ID certificate). Based upon this information, the Secretary will establish an electronic docket for the hearing in this proceeding if the Secretary has not already established an electronic docket.

Information about applying for a digital ID certificate is available on the NRC's public website at *https://www.nrc.gov/site-help/e-submittals/getting-started.html.* Once a participant has obtained a digital ID certificate and a docket has been created, the participant can then submit adjudicatory documents. Submissions must be in Portable Document Format (PDF). Additional guidance on PDF submissions is available on the NRC's public website at *https://www.nrc.gov/site-help/electronic-sub-ref-mat.html.* A filing is considered complete at the time the document is submitted through the NRC's E-Filing system. To be timely, an electronic filing must be submitted to the E-Filing system no later than 11:59 p.m. Eastern Time on the due date. Upon receipt of a transmission, the E-Filing system time-stamps the document and sends the submitter an email notice confirming receipt of the document. The E-Filing system also distributes an email notice that provides access to the document to the NRC's Office of the General Counsel and any others who have advised the Office of the Secretary that they wish to participate in the proceeding, so that the filer need not serve the document on those participants separately. Therefore, applicants and other participants (or their counsel or representative) must apply for and receive a digital ID certificate before adjudicatory documents are filed so that they can obtain access to the documents via the E-Filing system.

A person filing electronically using the NRC's adjudicatory E-Filing system may seek assistance by contacting the NRC's Electronic Filing Help Desk through the ''Contact Us'' link located on the NRC's public website at *https://www.nrc.gov/site-help/e-submittals.html,* by email to *MSHD.Resource@nrc.gov,* or by a toll-free call at 1–866–672–7640. The NRC Electronic Filing Help Desk is available between 9 a.m. and 6 p.m., Eastern Time, Monday through Friday, excluding government holidays.

Participants who believe that they have a good cause for not submitting documents electronically must file an exemption request, in accordance with 10 CFR 2.302(g), with their initial paper filing stating why there is good cause for not filing electronically and requesting authorization to continue to submit documents in paper format. Such filings must be submitted by: (1) First class mail addressed to the Office of the Secretary of the Commission, U.S. Nuclear Regulatory Commission, Washington, DC 20555–0001, Attention: Rulemaking and Adjudications Staff; or (2) courier, express mail, or expedited delivery service to the Office of the Secretary, 11555 Rockville Pike, Rockville, Maryland 20852, Attention: Rulemaking and Adjudications Staff. Participants filing adjudicatory documents in this manner are responsible for serving the document on all other participants. Filing is considered complete by first-class mail as of the time of deposit in the mail, or by courier, express mail, or expedited delivery service upon depositing the document with the provider of the service. A presiding officer, having granted an exemption request from using E-Filing, may require a participant or party to use E-Filing if the presiding officer subsequently determines that the reason for granting the exemption from use of E-Filing no longer exists.

Documents submitted in adjudicatory proceedings will appear in the NRC's electronic hearing docket which is available to the public at *https://adams.nrc.gov/ehd,* unless excluded pursuant to an order of the Commission or the presiding officer. If you do not have an NRC-issued digital ID certificate as described above, click ''cancel'' when the link requests certificates and you will be automatically directed to the NRC's electronic hearing dockets where you will be able to access any publicly available documents in a particular hearing docket. Participants are requested not to include personal privacy information, such as social

security numbers, home addresses, or personal phone numbers in their filings, unless an NRC regulation or other law requires submission of such information. For example, in some instances, individuals provide home addresses in order to demonstrate proximity to a facility or site. With respect to copyrighted works, except for limited excerpts that serve the purpose of the adjudicatory filings and would constitute a Fair Use application, participants are requested not to include copyrighted materials in their submission.

For further details with respect to this action, see the application for license amendment dated February 7, 2020.

Attorney for licensee: Mr. M. Stanford Blanton, Balch & Bingham LLP, 1710 Sixth Avenue North, Birmingham, AL 35203–2015.

NRC Branch Chief: Victor E. Hall.

Dated at Rockville, Maryland, this 4th day of March 2020.

For the Nuclear Regulatory Commission.

Victor E. Hall,

Chief, Vogtle Project Office, Office of Nuclear Reactor Regulation.

[FR Doc. 2020–04801 Filed 3–9–20; 8:45 am]

BILLING CODE 7590–01–P

NUCLEAR REGULATORY COMMISSION

[NRC–2020–0063]

Biweekly Notice; Applications and Amendments to Facility Operating Licenses and Combined Licenses Involving No Significant Hazards Considerations

AGENCY: Nuclear Regulatory Commission.

ACTION: Biweekly notice.

SUMMARY: Pursuant to section 189.a.(2) of the Atomic Energy Act of 1954, as amended (the Act), the U.S. Nuclear Regulatory Commission (NRC) is publishing this regular biweekly notice. The Act requires the Commission to publish notice of any amendments issued, or proposed to be issued, and grants the Commission the authority to issue and make immediately effective any amendment to an operating license or combined license, as applicable, upon a determination by the Commission that such amendment involves no significant hazards consideration, notwithstanding the pendency before the Commission of a request for a hearing from any person. This biweekly notice includes all amendments issued, or proposed to be issued, from February 11, 2020, to February 24, 2020. The last biweekly notice was published on February 25, 2020.

DATES: Comments must be filed by April 9, 2020. A request for a hearing or petitions for leave to intervene must be filed by May 11, 2020.

ADDRESSES: You may submit comments by any of the following methods:

- *Federal Rulemaking Website:* Go to *https://www.regulations.gov* and search for Docket ID NRC–2020–0063. Address questions about NRC Docket IDs in *Regulations.gov* to Jennifer Borges; telephone: 301–287–9127; email: *Jennifer.Borges@nrc.gov.* For technical questions, contact the individual listed in the **FOR FURTHER INFORMATION CONTACT** section of this document.
- *Mail comments to:* Office of Administration, Mail Stop: TWFN–7–A60M, U.S. Nuclear Regulatory Commission, Washington, DC 20555–0001, ATTN: Program Management, Announcements and Editing Staff.

For additional direction on obtaining information and submitting comments, see ''Obtaining Information and Submitting Comments'' in the **SUPPLEMENTARY INFORMATION** section of this document.

FOR FURTHER INFORMATION CONTACT: Janet C. Burkhardt, Office of Nuclear Reactor Regulation, telephone: 301–415–1384, email: *Janet.Burkhardt@nrc.gov,* U.S. Nuclear Regulatory Commission, Washington DC 20555–0001.

SUPPLEMENTARY INFORMATION:

I. Obtaining Information and Submitting Comments

A. Obtaining Information

Please refer to Docket ID NRC–2020–0063, facility name, unit number(s), docket number(s), application date, and subject when contacting the NRC about the availability of information for this action. You may obtain publicly-available information related to this action by any of the following methods:

- *Federal Rulemaking Website:* Go to *https://www.regulations.gov* and search for Docket ID NRC–2020–0063.
- *NRC's Agencywide Documents Access and Management System (ADAMS):* You may obtain publicly-available documents online in the ADAMS Public Documents collection at *https://www.nrc.gov/reading-rm/adams.html.* To begin the search, select ''Begin Web-based ADAMS Search.'' For problems with ADAMS, please contact the NRC's Public Document Room (PDR) reference staff at 1–800–397–4209, 301–415–4737, or by email to *pdr.resource@nrc.gov.* The ADAMS accession number for each document referenced (if it is available in ADAMS) is provided the first time that it is mentioned in this document.
- *NRC's PDR:* You may examine and purchase copies of public documents at the NRC's PDR, Room O1–F21, One White Flint North, 11555 Rockville Pike, Rockville, Maryland 20852.

B. Submitting Comments

Please include Docket ID NRC–2020–0063, facility name, unit number(s), docket number(s), application date, and subject in your comment submission.

The NRC cautions you not to include identifying or contact information that you do not want to be publicly disclosed in your comment submission. The NRC will post all comment submissions at *https://www.regulations.gov* as well as enter the comment submissions into ADAMS. The NRC does not routinely edit comment submissions to remove identifying or contact information.

If you are requesting or aggregating comments from other persons for submission to the NRC, then you should inform those persons not to include identifying or contact information that they do not want to be publicly disclosed in their comment submission. Your request should state that the NRC does not routinely edit comment submissions to remove such information before making the comment submissions available to the public or entering the comment into ADAMS.

II. Notice of Consideration of Issuance of Amendments to Facility Operating Licenses and Combined Licenses and Proposed No Significant Hazards Consideration Determination

For the facility-specific amendment requests shown below, the Commission finds that the licensee's analyses provided, consistent with title 10 of the *Code of Federal Regulations* (10 CFR) section 50.91 is sufficient to support the proposed determination that these amendment requests involve NSHC. Under the Commission's regulations in 10 CFR 50.92, operation of the facility in accordance with the proposed amendment would not (1) involve a significant increase in the probability or consequences of an accident previously evaluated; or (2) create the possibility of a new or different kind of accident from any accident previously evaluated; or (3) involve a significant reduction in a margin of safety.

The Commission is seeking public comments on this proposed determination. Any comments received within 30 days after the date of publication of this notice will be

considered in making any final determination.

Normally, the Commission will not issue the amendment until the expiration of 60 days after the date of publication of this notice. The Commission may issue the license amendment before expiration of the 60-day period provided that its final determination is that the amendment involves NSHC. In addition, the Commission may issue the amendment prior to the expiration of the 30-day comment period if circumstances change during the 30-day comment period such that failure to act in a timely way would result, for example in derating or shutdown of the facility. If the Commission takes action prior to the expiration of either the comment period or the notice period, it will publish in the **Federal Register** a notice of issuance. If the Commission makes a final NSHC determination, any hearing will take place after issuance. The Commission expects that the need to take action on an amendment before 60 days have elapsed will occur very infrequently.

A. Opportunity To Request a Hearing and Petition for Leave To Intervene

Within 60 days after the date of publication of this notice, any persons (petitioner) whose interest may be affected by this action may file a request for a hearing and petition for leave to intervene (petition) with respect to the action. Petitions shall be filed in accordance with the Commission's ''Agency Rules of Practice and Procedure'' in 10 CFR part 2. Interested persons should consult a current copy of 10 CFR 2.309. The NRC's regulations are accessible electronically from the NRC Library on the NRC's website at *https://www.nrc.gov/reading-rm/doc-collections/cfr/.* Alternatively, a copy of the regulations is available at the NRC's Public Document Room, located at One White Flint North, Room O1–F21, 11555 Rockville Pike (first floor), Rockville, Maryland 20852. If a petition is filed, the Commission or a presiding officer will rule on the petition and, if appropriate, a notice of a hearing will be issued.

As required by 10 CFR 2.309(d) the petition should specifically explain the reasons why intervention should be permitted with particular reference to the following general requirements for standing: (1) The name, address, and telephone number of the petitioner; (2) the nature of the petitioner's right under the Act to be made a party to the proceeding; (3) the nature and extent of the petitioner's property, financial, or other interest in the proceeding; and (4) the possible effect of any decision or order which may be entered in the proceeding on the petitioner's interest.

In accordance with 10 CFR 2.309(f), the petition must also set forth the specific contentions which the petitioner seeks to have litigated in the proceeding. Each contention must consist of a specific statement of the issue of law or fact to be raised or controverted. In addition, the petitioner must provide a brief explanation of the bases for the contention and a concise statement of the alleged facts or expert opinion which support the contention and on which the petitioner intends to rely in proving the contention at the hearing. The petitioner must also provide references to the specific sources and documents on which the petitioner intends to rely to support its position on the issue. The petition must include sufficient information to show that a genuine dispute exists with the applicant or licensee on a material issue of law or fact. Contentions must be limited to matters within the scope of the proceeding. The contention must be one which, if proven, would entitle the petitioner to relief. A petitioner who fails to satisfy the requirements at 10 CFR 2.309(f) with respect to at least one contention will not be permitted to participate as a party.

Those permitted to intervene become parties to the proceeding, subject to any limitations in the order granting leave to intervene. Parties have the opportunity to participate fully in the conduct of the hearing with respect to resolution of that party's admitted contentions, including the opportunity to present evidence, consistent with the NRC's regulations, policies, and procedures.

Petitions must be filed no later than 60 days from the date of publication of this notice. Petitions and motions for leave to file new or amended contentions that are filed after the deadline will not be entertained absent a determination by the presiding officer that the filing demonstrates good cause by satisfying the three factors in 10 CFR 2.309(c)(1)(i) through (iii). The petition must be filed in accordance with the filing instructions in the ''Electronic Submissions (E-Filing)'' section of this document.

If a hearing is requested, and the Commission has not made a final determination on the issue of no significant hazards consideration, the Commission will make a final determination on the issue of no significant hazards consideration. The final determination will serve to establish when the hearing is held. If the final determination is that the amendment request involves no significant hazards consideration, the Commission may issue the amendment and make it immediately effective, notwithstanding the request for a hearing. Any hearing would take place after issuance of the amendment. If the final determination is that the amendment request involves a significant hazards consideration, then any hearing held would take place before the issuance of the amendment unless the Commission finds an imminent danger to the health or safety of the public, in which case it will issue an appropriate order or rule under 10 CFR part 2.

A State, local governmental body, Federally-recognized Indian Tribe, or agency thereof, may submit a petition to the Commission to participate as a party under 10 CFR 2.309(h)(1). The petition should state the nature and extent of the petitioner's interest in the proceeding. The petition should be submitted to the Commission no later than 60 days from the date of publication of this notice. The petition must be filed in accordance with the filing instructions in the ''Electronic Submissions (E-Filing)'' section of this document, and should meet the requirements for petitions set forth in this section, except that under 10 CFR 2.309(h)(2) a State, local governmental body, or Federally-recognized Indian Tribe, or agency thereof does not need to address the standing requirements in 10 CFR 2.309(d) if the facility is located within its boundaries. Alternatively, a State, local governmental body, Federally-recognized Indian Tribe, or agency thereof may participate as a non-party under 10 CFR 2.315(c).

If a hearing is granted, any person who is not a party to the proceeding and is not affiliated with or represented by a party may, at the discretion of the presiding officer, be permitted to make a limited appearance pursuant to the provisions of 10 CFR 2.315(a). A person making a limited appearance may make an oral or written statement of his or her position on the issues but may not otherwise participate in the proceeding. A limited appearance may be made at any session of the hearing or at any prehearing conference, subject to the limits and conditions as may be imposed by the presiding officer. Details regarding the opportunity to make a limited appearance will be provided by the presiding officer if such sessions are scheduled.

B. Electronic Submissions (E-Filing)

All documents filed in NRC adjudicatory proceedings, including a request for hearing and petition for leave to intervene (petition), any motion

or other document filed in the proceeding prior to the submission of a request for hearing or petition to intervene, and documents filed by interested governmental entities that request to participate under 10 CFR 2.315(c), must be filed in accordance with the NRC's E-Filing rule (72 FR 49139; August 28, 2007, as amended at 77 FR 46562; August 3, 2012). The E-Filing process requires participants to submit and serve all adjudicatory documents over the internet, or in some cases to mail copies on electronic storage media. Detailed guidance on making electronic submissions may be found in the Guidance for Electronic Submissions to the NRC and on the NRC website at *https://www.nrc.gov/site-help/e-submittals.html.* Participants may not submit paper copies of their filings unless they seek an exemption in accordance with the procedures described below.

To comply with the procedural requirements of E-Filing, at least 10 days prior to the filing deadline, the participant should contact the Office of the Secretary by email at *hearing.docket@nrc.gov,* or by telephone at 301–415–1677, to (1) request a digital identification (ID) certificate, which allows the participant (or its counsel or representative) to digitally sign submissions and access the E-Filing system for any proceeding in which it is participating; and (2) advise the Secretary that the participant will be submitting a petition or other adjudicatory document (even in instances in which the participant, or its counsel or representative, already holds an NRC-issued digital ID certificate). Based upon this information, the Secretary will establish an electronic docket for the hearing in this proceeding if the Secretary has not already established an electronic docket.

Information about applying for a digital ID certificate is available on the NRC's public website at *https://www.nrc.gov/site-help/e-submittals/getting-started.html.* Once a participant has obtained a digital ID certificate and a docket has been created, the participant can then submit adjudicatory documents. Submissions must be in Portable Document Format (PDF). Additional guidance on PDF submissions is available on the NRC's public website at *https://www.nrc.gov/site-help/electronic-sub-ref-mat.html.* A filing is considered complete at the time the document is submitted through the NRC's E-Filing system. To be timely, an electronic filing must be submitted to the E-Filing system no later than 11:59 p.m. Eastern Time on the due date. Upon receipt of a transmission, the E-Filing system time-stamps the document and sends the submitter an email notice confirming receipt of the document. The E-Filing system also distributes an email notice that provides access to the document to the NRC's Office of the General Counsel and any others who have advised the Office of the Secretary that they wish to participate in the proceeding, so that the filer need not serve the document on those participants separately. Therefore, applicants and other participants (or their counsel or representative) must apply for and receive a digital ID certificate before adjudicatory documents are filed so that they can obtain access to the documents via the E-Filing system.

A person filing electronically using the NRC's adjudicatory E-Filing system may seek assistance by contacting the NRC's Electronic Filing Help Desk through the ''Contact Us'' link located on the NRC's public website at *https://www.nrc.gov/site-help/e-submittals.html,* by email to *MSHD.Resource@nrc.gov,* or by a toll-free call at 1–866–672–7640. The NRC Electronic Filing Help Desk is available between 9 a.m. and 6 p.m., Eastern Time, Monday through Friday, excluding government holidays.

Participants who believe that they have a good cause for not submitting documents electronically must file an exemption request, in accordance with 10 CFR 2.302(g), with their initial paper filing stating why there is good cause for not filing electronically and requesting authorization to continue to submit documents in paper format. Such filings must be submitted by: (1) First class mail addressed to the Office of the Secretary of the Commission, U.S. Nuclear Regulatory Commission, Washington, DC 20555–0001, Attention: Rulemaking and Adjudications Staff; or (2) courier, express mail, or expedited delivery service to the Office of the Secretary, 11555 Rockville Pike, Rockville, Maryland 20852, Attention: Rulemaking and Adjudications Staff. Participants filing adjudicatory documents in this manner are responsible for serving the document on all other participants. Filing is considered complete by first-class mail as of the time of deposit in the mail, or by courier, express mail, or expedited delivery service upon depositing the document with the provider of the service. A presiding officer, having granted an exemption request from using E-Filing, may require a participant or party to use E-Filing if the presiding officer subsequently determines that the reason for granting the exemption from use of E-Filing no longer exists.

Documents submitted in adjudicatory proceedings will appear in the NRC's electronic hearing docket which is available to the public at *https://adams.nrc.gov/ehd,* unless excluded pursuant to an order of the Commission or the presiding officer. If you do not have an NRC-issued digital ID certificate as described above, click ''cancel'' when the link requests certificates and you will be automatically directed to the NRC's electronic hearing dockets where you will be able to access any publicly available documents in a particular hearing docket. Participants are requested not to include personal privacy information, such as social security numbers, home addresses, or personal phone numbers in their filings, unless an NRC regulation or other law requires submission of such information. For example, in some instances, individuals provide home addresses in order to demonstrate proximity to a facility or site. With respect to copyrighted works, except for limited excerpts that serve the purpose of the adjudicatory filings and would constitute a Fair Use application, participants are requested not to include copyrighted materials in their submission.

The table below provides the plant name, docket number, date of application, ADAMS accession number, and location in the application of the licensee's proposed NSHC determination. For further details with respect to these license amendment applications, see the application for amendment which is available for public inspection in ADAMS and at the NRC's PDR. For additional direction on accessing information related to this document, see the ''Obtaining Information and Submitting Comments'' section of this document.

Entergy Louisiana, LLC and Entergy Operations, Inc.; River Bend Station, Unit 1; West Feliciana Parish, LA	
Application Date	November 18, 2019.
ADAMS Accession No	ML19322C569.
Location in Application of NSHC	Pages 2–3 of the Enclosure.
Brief Description of Amendments	The proposed amendment would modify River Bend Station, Unit 1 Technical Specification 3.3.5.2, ''Reactor Pressure Vessel (RPV) Water Inventory Control Instrumentation,'' by removing the surveillance frequencies and placing them in a licensee-controlled program through the adoption of Technical Specifications Task Force (TSTF) Traveler TSTF–425, Revision 3, ''Relocate Surveillance Frequencies to Licensee Control—RITSTF [Risk-Informed TSTF] Initiative 5b.''
Proposed Determination	NSHC.
Name of Attorney for Licensee, Mailing Address.	Anna Vinson Jones, Senior Counsel, Entergy Services, Inc., 101 Constitution Avenue NW, Suite 200 East, Washington, DC 20001.
Docket Nos	50–458.
NRC Project Manager, Telephone Number.	Thomas Wengert, 301–415–4037.

Florida Power & Light Company; Turkey Point Nuclear Generating Unit Nos. 3. and 4; Miami-Dade County, FL	
Application Date	January 27, 2020.
ADAMS Accession No	ML20034D803.
Location in Application of NSHC	Page 40 of Enclosure 1.
Brief Description of Amendments	This proposed change to the Turkey Point Units 3 and 4 technical specifications will allow the extension of the containment leak rate Type A testing interval up to one test every 15 years and extension of the Type C test interval up to 75 months, based on acceptable performance history.
Proposed Determination	NSHC.
Name of Attorney for Licensee, Mailing Address.	Debbie Hendell, Managing Attorney—Nuclear, Florida Power & Light Company, 700 Universe Blvd., MS LAW/JB, Juno Beach, FL 33408–0420.
Docket Nos	50–250, 50–251.
NRC Project Manager, Telephone Number.	Eva Brown, 301–415–2315.

III. Notice of Issuance of Amendments to Facility Operating Licenses and Combined Licenses

During the period since publication of the last biweekly notice, the Commission has issued the following amendments. The Commission has determined for each of these amendments that the application complies with the standards and requirements of the Atomic Energy Act of 1954, as amended (the Act), and the Commission's rules and regulations. The Commission has made appropriate findings as required by the Act and the Commission's rules and regulations in 10 CFR chapter I, which are set forth in the license amendment.

A notice of consideration of issuance of amendment to facility operating license or combined license, as applicable, proposed NSHC determination, and opportunity for a hearing in connection with these actions, was published in the **Federal Register** as indicated.

Unless otherwise indicated, the Commission has determined that these amendments satisfy the criteria for categorical exclusion in accordance with 10 CFR 51.22. Therefore, pursuant to 10 CFR 51.22(b), no environmental impact statement or environmental assessment need be prepared for these amendments. If the Commission has prepared an environmental assessment under the special circumstances provision in 10 CFR 51.22(b) and has made a determination based on that assessment, it is so indicated.

For further details with respect to the action, see (1) the application for amendment; (2) the amendment; and (3) the Commission's related letter, Safety Evaluation, and/or Environmental Assessment as indicated. All of these items can be accessed as described in the ''Obtaining Information and Submitting Comments'' section of this document.c

Duke Energy Carolinas, LLC; Catawba Nuclear Station, Units 1 and 2; York County, SC

Date Issued	January 31, 2020.
ADAMS Accession No	ML19296D119.
Amendment Nos	305 (Unit 1) and 301 (Unit 2).
Brief Description of Amendments	The amendments revised the technical specifications (TSs) in response to the application from Duke Energy Carolinas, LLC (the licensee) dated September 4, 2019. The amendments corrected an editorial error in TS 3.0, ''Surveillance Requirement (SR) Applicability,'' that was introduced in SR 3.0.5 by the issuance of Amendment Nos. 235 and 231.
Docket Nos	50–413, 50–414.

Duke Energy Progress, LLC; Brunswick Steam Electric Plant, Units 1 and 2; Brunswick County, NC

Date Issued	February 6, 2020.
ADAMS Accession No	ML19346C792.
Amendment Nos.	298 (Unit 1) and 326 (Unit 2).
Brief Description of Amendments	The amendments modified Technical Specification 5.5.12, ''Primary Containment Leakage Rate Testing Program.'' This change extends the maximum interval for the integrated leakage rate test from 10 years to 15 years and the maximum interval for the containment isolation valve local leak rate tests from 60 months to 75 months.
Docket Nos	50–325, 50–324.

Exelon Generation Company, LLC; Braidwood Station, Units 1 and 2; Will County, IL; Exelon Generation Company, LLC; Byron Station, Unit Nos. 1 and 2, Ogle County, IL; Exelon Generation Company, LLC, Clinton Power Station, Unit No. 1, DeWitt County, IL; Exelon Generation Company, LLC; Dresden Nuclear Power Station, Units 1, 2, and 3; Grundy County, IL; Exelon Generation Company, LLC, LaSalle County Station, Units 1 and 2; LaSalle County, IL; Exelon Generation Company, LLC; Limerick Generating Station, Units 1 and 2; Montgomery County, PA; Exelon Generation Company, LLC and PSEG Nuclear LLC; Peach Bottom Atomic Power Station, Units 1, 2, and 3; York and Lancaster Counties, PA; Exelon Generation Company, LLC; Quad Cities Nuclear Power Station, Units 1 and 2; Rock Island County, IL

Date Issued	February 14, 2020.
ADAMS Accession No	ML19331A725.
Amendment Nos	Braidwood—205 (Unit 1), 205 (Unit 2); Byron—211 (Unit 1), 211 (Unit 2); Clinton—228; Dresden—47 (Unit 1), 265 (Unit 2), 258 (Unit 3); LaSalle—241 (Unit 1), 227 (Unit 2); Limerick—239 (Unit 1), 202 (Unit 2); Peach Bottom—15 (Unit 1), 331 (Unit 2), 334 (Unit 3); Quad Cities—278 (Unit 1), 273 (Unit 2).
Brief Description of Amendments	The amendments revised the emergency action levels in the emergency plan for each site.
Docket Nos	50–456, 50–457, 50–454, 50–455, 50–461, 50–010, 50–237, 50–249, 50–373, 50–374, 50–352, 50–353, 50–171, 50–277, 50–278, 50–254, 50–265.

NextEra Energy Point Beach, LLC; Point Beach Nuclear Plant, Units 1 and 2; Manitowoc County, WI, NextEra Energy Seabrook, LLC; Seabrook Station, Unit No. 1; Rockingham County, NH, Florida Power & Light Company; Turkey Point Nuclear Generating Unit Nos. 3. and 4; Miami-Dade County, FL

Date Issued	February 10, 2020.
ADAMS Accession No	ML19357A195.
Amendment Nos	Point Beach—265 (Unit 1) and 268 (Unit 2); Seabrook—164; Turkey Point—290 (Unit No. 3) and 284 (Unit No. 4).
Brief Description of Amendments	The amendments revised the current instrumentation testing definitions of channel calibration, channel operational test, and trip actuating device operational test to permit determination of the appropriate frequency to perform the surveillance requirements based on the devices being tested in each step. The changes are based on Technical Specifications Task Force (TSTF) Traveler, TSTF–563, Revision 0.
Docket Nos	50–266, 50–301, 50–443, 50–250, 50–251.

PSEG Nuclear LLC; Hope Creek Generating Station; Salem County, NJ, PSEG Nuclear LLC; Salem Nuclear Generating Station, Unit Nos. 1 and 2; Salem County, NJ

Date Issued	February 18, 2020.
ADAMS Accession No	ML19352F231.
Amendment Nos	Hope Creek—221; Salem—332 (Unit No. 1) and 313 (Unit No. 2).
Brief Description of Amendments	The amendments revised the emergency plans by changing the emergency response organization staffing requirements for the facilities.
Docket Nos	50–354, 50–272, 50–311.

Southern Nuclear Operating Company, Inc.; Edwin I. Hatch Nuclear Plant, Units 1 and 2; Appling County, GA

Date Issued	December 3, 2019.
ADAMS Accession No	ML19312A098.
Amendment Nos	302 (Unit 1), 247 (Unit 2).
Brief Description of Amendments	The amendments revised Edwin I. Hatch Nuclear Plant (Hatch), Units 1 and 2, Technical Specification (TS) 3.3.8.1, ''Loss of Power (LOP) Instrumentation,'' to modify the instrument allowable values for the 4.16 kilovolt (kV) emergency bus degraded voltage instrumentation for Hatch, Unit 1, and delete the annunciation requirements for the 4.16 kV emergency bus undervoltage instrumentation for Hatch, Unit 1, including associated TS actions. These amendments also deleted Hatch, Unit 1, License Condition 2.C(11) and Hatch, Unit 2, License Condition 2.C(3)(i). Additionally, the amendments revised Surveillance Requirement 3.8.1.8 in TS 3.8.1, ''AC [Alternating Current] Sources—Operating,'' to increase the voltage limit in the emergency diesel generator (EDG) full load rejection test for the Hatch, Unit 1, EDGs.
Docket Nos	50–321, 50–366.

Previously Published Notice of Consideration of Issuance of Amendments to Facility Operating Licenses and Combined Licenses, Proposed No Significant Hazards Consideration Determination, and Opportunity for a Hearing

The following notices were previously published as separate individual notices. The notice content was the same as above. They were published as individual notices either because time did not allow the commission to wait for this biweekly notice or because the action involved exigent circumstances. They are repeated here because the biweekly notice lists all amendments issued or proposed to be issued involving no significant hazards consideration.

For details, including the applicable notice period, see the individual notice in the **Federal Register** on the day and page cited.

Vistra Operations Company LLC; Comanche Peak Nuclear Power Plant, Unit Nos. 1 and 2; Somervell County, TX	
Application Date	November 7, 2019.
ADAMS Accession No	ML19325C593.
Brief Description of Amendment	The proposed amendments would revise Technical Specification 3.4.15, ''RCS [Reactor Coolant System] Leakage Detection Instrumentation,'' to align with the Standard Technical Specifications for Westinghouse Plants and incorporate the changes made by Technical Specifications Task Force (TSTF) Traveler TSTF-513, Revision 3, ''Revise PWR [Pressurized-Water Reactor] Operability Requirements and Actions for RCS Leakage Instrumentation.''
Date & Cite of **Federal Register** Individual Notice	February 20, 2020; 85 FR 9813.
Expiration Dates for Public Comments & Hearing Requests.	March 23, 2020 (comments); April 20, 2020 (hearing requests).
Docket Nos	50–445, 50–446.

Dated at Rockville, Maryland, this 27th day of February 2020.

For the Nuclear Regulatory Commission.

Craig G. Erlanger,

Director, Division of Operating Reactor Licensing, Office of Nuclear Reactor Regulation.

[FR Doc. 2020–04367 Filed 3–9–20; 8:45 am]

BILLING CODE 7590–01–P

PENSION BENEFIT GUARANTY CORPORATION

Proposed Submission of Information Collections for OMB Review; Comment Request; Liability for Termination of Single-Employer Plans

AGENCY: Pension Benefit Guaranty Corporation.

ACTION: Notice of intent to request extension of OMB approval of collection of information.

SUMMARY: The Pension Benefit Guaranty Corporation (PBGC) intends to request that the Office of Management and Budget (OMB) extend approval, under the Paperwork Reduction Act, of a collection of information contained in its regulation on Liability for Termination of Single-Employer Plans (OMB control number 1212–0017; expires August 31, 2020). This notice informs the public of PBGC's intent and solicits public comment on the collection of information.

DATES: Comments must be received on or before May 11, 2020 to be assured of consideration.

ADDRESSES: Comments may be submitted by any of the following methods:

- *Federal eRulemaking Portal: http://www.regulations.gov*. Follow the instructions for submitting comments.
- *Email: paperwork.comments@pbgc.gov*. Refer to Liability for Termination of Single-Employer Plans information collection in the subject line.
- *Mail or Hand Delivery:* Regulatory Affairs Division, Office of the General Counsel, Pension Benefit Guaranty Corporation, 1200 K Street NW, Washington, DC 20005–4026.

All submissions received must include the agency's name (Pension Benefit Guaranty Corporation, or PBGC) and refer to Liability for Termination of Single-Employer Plans information collection. All comments received will be posted without change to PBGC's website, *http://www.pbgc.gov,* including any personal information provided.

Copies of the collection of information may be obtained by writing to Disclosure Division, Office of the General Counsel, Pension Benefit Guaranty Corporation, 1200 K Street NW, Washington, DC 20005–4026, or calling 202–326–4040 during normal business hours. TTY users may call the Federal Relay Service toll-free at 800–877–8339 and ask to be connected to 202–326–4040.

FOR FURTHER INFORMATION CONTACT: Melissa Rifkin (*rifkin.melissa@pbgc.gov*), Attorney, Regulatory Affairs Division, Office of the General Counsel, Pension Benefit Guaranty Corporation, 1200 K Street NW, Washington, DC 20005–4026; 202–229–6563. (TTY users may call the Federal Relay Service toll-free at 800–877–8339 and ask to be connected to 202–229–6563.)

SUPPLEMENTARY INFORMATION: Section 4062 of the Employee Retirement Income Security Act of 1974, as amended, provides that the contributing sponsor of a single-employer pension plan and members of the sponsor's controlled group (''the employer'') incur liability (''employer liability'') if the plan terminates with assets insufficient to pay benefit liabilities under the plan. PBGC's statutory lien for employer liability and the payment terms for employer liability are affected by whether and to what extent employer liability exceeds 30 percent of the employer's net worth. Section 4062.6 of PBGC's employer liability regulation (29 CFR part 4062) requires a contributing sponsor or member of the contributing sponsor's controlled group that believes employer liability upon plan termination exceeds 30 percent of the employer's net worth to so notify PBGC and submit net worth information to PBGC. This information is necessary to enable PBGC to determine whether and to what extent employer liability exceeds 30 percent of the employer's net worth.

The collection of information under the regulation has been approved by OMB under control number 1212–0017 (expires August 31, 2020). PBGC intends to request that OMB extend its approval for another three years. An agency may not conduct or sponsor, and a person is not required to respond to, a collection of information unless it displays a currently valid OMB control number.

PBGC estimates that an average of 29 contributing sponsors or controlled group members per year will respond to this collection of information. PBGC further estimates that the average annual burden of this collection of information will be 12 hours and $5,400 per respondent, with an average total

annual burden of 348 hours and $156,600.

PBGC is soliciting public comments to—

- Evaluate whether the proposed collection of information is necessary for the proper performance of the functions of the agency, including whether the information will have practical utility;
- Evaluate the accuracy of the agency's estimate of the burden of the proposed collection of information, including the validity of the methodologies and assumptions used;
- Enhance the quality, utility, and clarity of the information to be collected; and
- Minimize the burden of the collection of information on those who are to respond, including through the use of appropriate automated, electronic, mechanical, or other technological collection techniques or other forms of information technology, *e.g.* permitting electronic submission of responses.

Issued in Washington, DC.

Hilary Duke,

Assistant General Counsel for Regulatory Affairs, Pension Benefit Guaranty Corporation.

[FR Doc. 2020–04848 Filed 3–9–20; 8:45 am]

BILLING CODE 7709–02–P

POSTAL SERVICE

Product Change—Priority Mail Negotiated Service Agreement

AGENCY: Postal Service™.

ACTION: Notice.

SUMMARY: The Postal Service gives notice of filing a request with the Postal Regulatory Commission to add a domestic shipping services contract to the list of Negotiated Service Agreements in the Mail Classification Schedule's Competitive Products List.

DATES: *Date of required notice* March 10, 2020.

FOR FURTHER INFORMATION CONTACT: Sean Robinson, 202–268–8405.

SUPPLEMENTARY INFORMATION: The United States Postal Service® hereby gives notice that, pursuant to 39 U.S.C. 3642 and 3632(b)(3), on March 5, 2020, it filed with the Postal Regulatory Commission a *USPS Request to Add Priority Mail Contract 595 to Competitive Product List.* Documents are available at *www.prc.gov,* Docket Nos. MC2020–98, CP2020–103.

Sean Robinson,

Attorney, Corporate and Postal Business Law.

[FR Doc. 2020–04886 Filed 3–9–20; 8:45 am]

BILLING CODE 7710–12–P

POSTAL SERVICE

International Product Change—Priority Mail Express International, Priority Mail International & First-Class Package International Service Agreement

AGENCY: Postal Service™.

ACTION: Notice.

SUMMARY: The Postal Service gives notice of filing a request with the Postal Regulatory Commission to add a Priority Mail Express International, Priority Mail International & First-Class Package International Service contract to the list of Negotiated Service Agreements in the Competitive Product List in the Mail Classification Schedule.

DATES: Date of notice: March 10, 2020.

FOR FURTHER INFORMATION CONTACT: Christopher C. Meyerson, (202) 268–7820.

SUPPLEMENTARY INFORMATION: The United States Postal Service® hereby gives notice that, pursuant to 39 U.S.C. 3642 and 3632(b)(3), on March 3, 2020, it filed with the Postal Regulatory Commission a *USPS Request to Add Priority Mail Express International, Priority Mail International & First-Class Package International Service Contract 1 to Competitive Product List.* Documents are available at *www.prc.gov,* Docket Nos. MC2020–97 and CP2020–101.

Christopher C. Meyerson,

Attorney, Corporate and Postal Business Law.

[FR Doc. 2020–04798 Filed 3–9–20; 8:45 am]

BILLING CODE 7710–12–P

SECURITIES AND EXCHANGE COMMISSION

[Release No. 34–88315; File No. SR–NASDAQ–2019–091]

Self-Regulatory Organizations; The Nasdaq Stock Market LLC; Order Instituting Proceedings To Determine Whether To Approve or Disapprove a Proposed Rule Change To Adopt a New Rule Concerning Nasdaq's Ability To Request Information From a Listed Company Regarding the Number of Unrestricted Publicly Held Shares in Certain Circumstances and Halt Trading in the Company's Security Upon the Request, and in Certain Circumstances Request a Plan To Increase the Number of Unrestricted Publicly Held Shares to an Amount That Is Higher Than the Applicable Publicly Held Shares Requirement

March 4, 2020.

I. Introduction

On November 22, 2019, The Nasdaq Stock Market LLC (''Nasdaq'' or the ''Exchange'') filed with the Securities and Exchange Commission (''Commission''), pursuant to Section 19(b)(1) of the Securities Exchange Act of 1934 (''Act'') [1] and Rule 19b–4 thereunder,[2] a proposed rule change to adopt a rule specifying Nasdaq's ability to request information from a listed company regarding the number of unrestricted publicly held shares when Nasdaq observes unusual trading characteristics in a security or a company announces an event that may cause a contracting in the number of unrestricted publicly held shares, halt trading in such company's securities upon such a request, and potentially request a listed company to increase its number of unrestricted publicly held shares. The proposed rule change was published for comment in the **Federal Register** on December 12, 2019.[3] On January 24, 2020, pursuant to Section 19(b(2) of the Act,[4] the Commission designated a longer period within which to either approve the proposed rule change, disapprove the proposed rule change, or institute proceedings to determine whether to disapprove the proposed rule change.[5] The Commission

[1] 15 U.S.C. 78s(b)(1).

[2] 17 CFR 240.19b–4.

[3] *See* Securities Exchange Act Release No. 87677 (December 6, 2019), 84 FR 67974 (December 12, 2019) (''Notice'').

[4] 15 U.S.C. 78s(b)(2).

[5] *See* Securities Exchange Act Release No. 88028 (January 24, 2020), 85 FR 5500 (January 30, 2020). The Commission designated March 11, 2020, as the date by which it should approve, disapprove, or institute proceedings to determine whether to disapprove the proposed rule change.

received no comment letters on the proposed rule change. This order institutes proceedings under Section 19(b)(2)(B) of the Act [6] to determine whether to approve or disapprove the proposed rule change.

II. Description of the Proposal

Nasdaq's current continued listing standards require a listed company to maintain a minimum number of Publicly Held Shares,[7] without excluding Restricted Securities [8] from such calculation.[9] In contrast, for initial listing, Nasdaq's current rules, as amended in 2019,[10] require that a company seeking to be listed on Nasdaq have, among other things, a minimum number of Unrestricted Publicly Held Shares.[11]

Nasdaq has proposed to adopt new Rule 5120, which would provide that, while Nasdaq would not ordinarily consider the number of Unrestricted Publicly Held Shares of a listed company's security, Nasdaq may request information from a company regarding the number of Unrestricted Publicly Held Shares if (1) Nasdaq observes unusual trading characteristics in the security; or (2) the company has announced an event that may cause a contraction in the number of Unrestricted Publicly Held Shares.[12] Proposed Rule 5120 also sets forth that pursuant to Nasdaq's authority under Rule 4120(a)(5),[13] Nasdaq may halt trading in the security in connection with such a request.[14] When considering whether a security has unusual trading characteristics, the proposed rule provides that Nasdaq may review volume, price movements, spread, and the presence or absence of any news.[15] Furthermore, the proposed rule specifies the events that may cause a contraction in the number of Unrestricted Publicly Held Shares, thereby possibly triggering a request for additional information, to include reverse stock splits, tender offers, stock buybacks, or entering into contractual agreements such as standstills or lockups.[16]

Further, proposed Rule 5120 provides that if information provided by the company or otherwise obtained by Nasdaq indicates that the number of Unrestricted Publicly Held Shares for the security is below the applicable Publicly Held Shares requirement for continued listing of the security, Nasdaq generally would use its authority under Rule 5101 [17] to apply more stringent criteria and request a plan to increase the number of Unrestricted Publicly Held Shares to an amount that is higher than the applicable Publicly Held Shares requirement.[18] Such a plan would generally be required to be provided within 45 calendar days of the request, as provided in the Rule 5800 Series.[19]

In support of its proposal, Nasdaq stated that it believes that its previously revised initial listing standards do not sufficiently address listed companies that may have Restricted Securities, which could potentially result in a security that is illiquid.[20] Nasdaq noted that illiquid securities may trade infrequently and in a more volatile manner, change hands at a price that may not reflect their true market value, and may be more susceptible to price manipulation.[21] According to Nasdaq, the proposal would enhance transparency [22] and ensure that securities listed on Nasdaq are liquid and have sufficient freely tradeable shares to meet investor demand, thereby reducing trading volatility and price manipulation.[23]

III. Proceedings To Determine Whether To Approve or Disapprove SR–NASDAQ–2019–091 and Grounds for Disapproval Under Consideration

The Commission is instituting proceedings pursuant to Section 19(b)(2)(B) of the Act to determine whether the proposal should be approved or disapproved.[24] Institution of such proceedings is appropriate at this time in view of the legal and policy issues raised by the proposed rule change, as discussed below. Institution of disapproval proceedings does not indicate that the Commission has reached any conclusions with respect to any of the issues involved.

Pursuant to Section 19(b)(2)(B) of the Act, the Commission is providing notice

[6] 15 U.S.C. 78s(b)(2)(B).

[7] ''Publicly Held Shares'' is defined as ''shares not held directly or indirectly by an officer, director or any person who is the beneficial owner of more than 10 percent of the total shares outstanding.'' *See* Rule 5005(a)(35).

[8] ''Restricted Securities'' is defined as ''securities that are subject to resale restrictions for any reason, including but not limited to, securities: (1) Acquired directly or indirectly from the issuer or an affiliate of the issuer in unregistered offerings such as private placements or Regulation D offerings; (2) acquired through an employee stock benefit plan or as compensation for professional services; (3) acquired in reliance on Regulation S, which cannot be resold within the United States; (4) subject to a lockup agreement or a similar contractual restriction; or (5) considered 'restricted securities' under Rule 144.'' *See* Rule 5005(a)(37).

[9] *See* proposed Rule 5120. *See also* Notice, *supra* note 3, 84 FR at 67974. For the continued listing requirements relating to Publicly Held Shares, *see* Rules 5450(b)(1)(B), (2)(B), and (3)(B), 5460(a)(1), 5550(a)(4), 5555(a)(3), and 5565(a).

[10] *See* Securities Exchange Act Release No. 86314 (July 5, 2019), 84 FR 33102 (July 11, 2019) (SR–NASDAQ–2019–009) (approving Nasdaq's proposal to, among other things, require that Restricted Securities be excluded from Nasdaq's calculation of Publicly Held Shares for purposes of meeting initial listing requirements).

[11] ''Unrestricted Publicly Held Shares'' is defined as ''Publicly Held Shares that are Unrestricted Securities.'' *See* Rule 5005(a)(45). ''Unrestricted Securities'' is defined as ''securities that are not Restricted Securities.'' *See* Rule 5005(a)(46). For the initial listing requirements relating to Unrestricted Publicly Held Shares, *see* Rules 5315(e)(2), 5405(a)(2), 5415(a)(1), 5505(a)(2), 5510(a)(3), and 5520(g)(3).

[12] *See* proposed Rule 5120.

[13] Rule 4120(a)(5) provides that Nasdaq ''may halt trading in a security listed on Nasdaq when Nasdaq requests from the issuer information relating to: (A) Material news; (B) the issuer's ability to meet Nasdaq listing qualification requirements, as set forth in the Listing Rule 5000 Series; or (C) any other information which is necessary to protect investors and the public interest.''

[14] *See* proposed Rule 5120.

[15] *See* proposed Rule 5120.

[16] *See* proposed Rule 5120.

[17] Rule 5101 states, in part, that Nasdaq ''has broad discretionary authority over the initial and continued listing of securities in Nasdaq . . . . [and] may use such discretion to . . . apply additional or more stringent criteria for the initial or continued listing of particular securities, or suspend or delist particular securities based on any event, condition, or circumstance that exists or occurs that makes initial or continued listing of the securities on Nasdaq inadvisable or unwarranted in the opinion of Nasdaq, even though the securities meet all enumerated criteria for initial or continued listing on Nasdaq.''

[18] *See* proposed Rule 5120.

[19] *See* proposed Rule 5120. Nasdaq has proposed to make conforming changes to Rule 5810(c)(2)(A) to add a deficiency under proposed Rule 5120 to the list of deficiencies for which a company may submit to the Exchange's Listing Qualifications Department a plan to regain compliance. Nasdaq has also proposed to make other conforming and non-substantive changes to Rule 5810(c)(2). *See* proposed Rule 5810(c)(2). In addition, Nasdaq has proposed non-substantive changes to Rule 5810(c)(3)(A) (which deals with a company's failure to meet the continued listing requirement for minimum bid price) to revise the phrase ''market value of publicly held shares'' to utilize the terms ''Market Value'' and ''Publicly Held Shares,'' which are defined in Rule 5005(a). *See* proposed Rule 5810(c)(3)(A)(i) and (ii).

[20] *See* Notice, *supra* note 3, 84 FR at 67974. For example, Nasdaq stated that companies that were not required to meet the newer initial listing requirements may still have Restricted Securities that are not freely tradeable, and a listed company may conduct a transaction that decreases its number of Unrestricted Publicly Held Shares. *See id.*

[21] *See* Notice, *supra* note 3, 84 FR at 67974. Nasdaq stated that it has observed problems with a small number of listed companies that have a large number of Restricted Securities, and that such companies may not have sufficient liquidity to meet investor demand, particularly upon announcement of material news, which may result in unusual trading characteristics, such as extreme price movements and unusually large bid-ask spreads. *See id.*

[22] According to Nasdaq, its existing rules would currently allow it to apply additional criteria to a listed company that satisfies all of the continued listing requirements where there are indications that there is insufficient liquidity in the security to support fair and orderly trading. *See* Notice, *supra* note 3, 84 FR at 67974, n.7 (citing Rule 5101).

[23] *See* Notice, *supra* note 3, 84 FR at 67975.

[24] 15 U.S.C. 78s(b)(2)(B).

of the grounds for disapproval under consideration. The Commission is instituting proceedings to allow for additional analysis and input concerning the proposed rule change's consistency with the Act [25] and, in particular, with Section 6(b)(5) of the Act, which requires, among other things, that the rules of a national securities exchange not be designed to permit unfair discrimination between customers, issuers, brokers, or dealers.[26]

Nasdaq is proposing to adopt a new rule to specifically permit it to request additional information from a listed company regarding its number of Unrestricted Publicly Held Shares if Nasdaq observes unusual trading characteristics in a listed company's security or if the listed company has announced an event that may cause a contraction in the number of Unrestricted Publicly Held Shares. Nasdaq acknowledges that its continued listing standards currently require a minimum number of Publicly Held Shares, but not a minimum number of Unrestricted Publicly Held Shares. Nasdaq specifies, in the proposed rule, that in considering whether there are unusual trading characteristics in a security for purposes of requesting additional information on the number of Unrestricted Publicly Held Shares, Nasdaq may review volume, price movements, spread, and the presence or absence of any news. However, Nasdaq does not state how these broad factors would be considered in its determination of whether there are unusual trading characteristics to trigger a request for additional information, other than to note that the ''unusual trading characteristics'' it has observed in the past include ''extreme price movements'' and ''unusually large bid ask spreads.'' [27] In any case, whether unusual trading characteristics, however determined, would cause Nasdaq to request additional information from a listed company on the number of Unrestricted Publicly Held Shares appears to be subject to wide discretion under the proposed rule.

Similarly, under the proposed rule, Nasdaq may also request information on the number of Unrestricted Publicly Held Shares if the listed company has announced an event that may cause a contraction in the number of such unrestricted shares, such as a reverse stock split, tender offer, or stock buyback. The Exchange has not provided any specific explanation of when such events would or would not trigger a request for the number of Unrestricted Publicly Held Shares, but rather just provided that such events ''may'' trigger such a request, with the result that this provision also appears to be subject to wide discretion by Nasdaq.

Upon Nasdaq requesting additional information on the number of Unrestricted Publicly Held Shares, the proposed rule then states that if the information indicates the number of such unrestricted shares are below the applicable minimum number of Publicly Held Shares continued listing standard, Nasdaq generally will use its authority under Rule 5101 to apply more stringent criteria and request a plan to increase the number of Unrestricted Publicly Held Shares to an amount that is higher than the applicable minimum number of Publicly Held Shares continued listing standard. Nasdaq does not provide any information in its filing regarding when it generally will or will not use its authority to request such a plan. Moreover, should Nasdaq ask the listed company to provide a plan to increase the minimum number of Unrestricted Publicly Held Shares, Nasdaq provides no guidance on how it would determine such minimum number, with the result that this provision appears to be subject to wide discretion by Nasdaq as well.

Nasdaq stated that its proposal is not designed to permit unfair discrimination between customers, issuers, brokers, or dealers because, while the proposed changes will only apply to securities exhibiting unusual trading characteristics and companies that announce an event that may cause a contraction in the number of Unrestricted Publicly Held Shares, Nasdaq will apply this standard to all such securities listed on Nasdaq.[28] As discussed above, however, the Exchange's proposal provides it wide discretion both (1) to determine whether to request additional information from a listed company on the number of Unrestricted Publicly Held Shares; and (2) if it does so, and that number is less than the minimum number of Publicly Held Shares, to establish the more stringent requirements with respect to the minimum number of Unrestricted Publicly Held Shares. Accordingly, the Commission believes there are questions as to whether the proposal is consistent with Section 6(b)(5) of the Act and its requirement, among other things, that the rules of a national securities exchange not be designed to permit unfair discrimination.

The Commission notes that under the Commission's Rules of Practice, the ''burden to demonstrate that a proposed rule change is consistent with the Exchange Act and the rules and regulations issued thereunder . . . is on the self-regulatory organization ['SRO'] that proposed the rule change.'' [29] The description of a proposed rule change, its purpose and operation, its effect, and a legal analysis of its consistency with applicable requirements must all be sufficiently detailed and specific to support an affirmative Commission finding,[30] and any failure of an SRO to provide this information may result in the Commission not having a sufficient basis to make an affirmative finding that a proposed rule change is consistent with the Exchange Act and the applicable rules and regulations.[31]

For these reasons, the Commission believes it is appropriate to institute proceedings pursuant to Section 19(b)(2)(B) of the Act to determine whether the proposal should be approved or disapproved.

IV. Commission's Solicitation of Comments

The Commission requests that interested persons provide written submissions of their views, data, and arguments with respect to the issues identified above, as well as any other concerns they may have with the proposal. In particular, the Commission invites the written view of interested persons concerning whether the proposal is consistent with Section 6(b)(5) or any other provision of the Act, or the rules and regulations thereunder. Although there do not appear to be any issues relevant to approval or disapproval that would be facilitated by an oral presentation of views, data, and arguments, the Commission will consider, pursuant to Rule 19b–4, any request for an opportunity to make an oral presentation.[32]

Interested persons are invited to submit written data, views, and arguments regarding whether the proposal should be approved or disapproved by March 31, 2020. Any person who wishes to file a rebuttal to any other person's submission must file

[25] 15 U.S.C. 78f(b)(5).

[26] *Id.*

[27] *See* Notice, *supra* note 3, 84 FR at 67974.

[28] *See* Notice, *supra* note 3, 84 FR at 67975–76.

[29] Rule 700(b)(3), Commission Rules of Practice, 17 CFR 201.700(b)(3).

[30] *See id.*

[31] *See id.*

[32] Section 19(b)(2) of the Exchange Act, as amended by the Securities Act Amendments of 1975, Public Law 94–29 (June 4, 1975), grants the Commission flexibility to determine what type of proceeding—either oral or notice and opportunity for written comments—is appropriate for consideration of a particular proposal by a self-regulatory organization. *See* Securities Act Amendments of 1975, Senate Comm. on Banking, Housing & Urban Affairs, S. Rep. No. 75, 94th Cong., 1st Sess. 30 (1975).

that rebuttal by April 14, 2020. The Commission asks that commenters address the sufficiency of the Exchange's statements in support of the proposal which are set forth in the Notice,[33] in addition to any other comments they may wish to submit about the proposed rule change.

Comments may be submitted by any of the following methods:

Electronic Comments

- Use the Commission's internet comment form (*http://www.sec.gov/rules/sro.shtml*); or
- Send an email to *rule-comments@sec.gov.* Please include File Number SR–NASDAQ–2019–091 on the subject line.

Paper Comments

- Send paper comments in triplicate to Secretary, Securities and Exchange Commission, 100 F Street NE, Washington, DC 20549–1090.

All submissions should refer to File Number SR–NASDAQ–2019–091. This file number should be included on the subject line if email is used. To help the Commission process and review your comments more efficiently, please use only one method. The Commission will post all comments on the Commission's internet website (*http://www.sec.gov/rules/sro.shtml*). Copies of the submission, all subsequent amendments, all written statements with respect to the proposed rule change that are filed with the Commission, and all written communications relating to the proposed rule change between the Commission and any person, other than those that may be withheld from the public in accordance with the provisions of 5 U.S.C. 552, will be available for website viewing and printing in the Commission's Public Reference Room, 100 F Street NE, Washington, DC 20549, on official business days between the hours of 10:00 a.m. and 3:00 p.m. Copies of such filing also will be available for inspection and copying at the principal office of the Exchange. All comments received will be posted without change. Persons submitting comments are cautioned that we do not redact or edit personal identifying information from comment submissions. You should submit only information that you wish to make available publicly. All submissions should refer to File Number SR–NASDAQ–2019–091 and should be submitted on or before March 31, 2020. Rebuttal comments should be submitted by April 14, 2020.

For the Commission, by the Division of Trading and Markets, pursuant to delegated authority.[34]

J. Matthew DeLesDernier,

Assistant Secretary.

[FR Doc. 2020–04790 Filed 3–9–20; 8:45 am]

BILLING CODE 8011–01–P

[33] *See* Notice, *supra* note 3.

[34] 17 CFR 200.30–3(a)(57).

SECURITIES AND EXCHANGE COMMISSION

[Release No. 34–88323; File No. SR-CboeEDGA–2020–005]

Self-Regulatory Organizations; Cboe EDGA Exchange, Inc.; Notice of Filing of a Proposed Rule Change To Amend EDGA Rule 11.8(e), Which Describes the Handling of MidPoint Discretionary Orders Entered on the Exchange

March 5, 2020.

Pursuant to Section 19(b)(1) of the Securities Exchange Act of 1934 (the ''Act''),[1] and Rule 19b–4 thereunder,[2] notice is hereby given that on February 28, 2020, Cboe EDGA Exchange, Inc. (the ''Exchange'') filed with the Securities and Exchange Commission (the ''Commission'') the proposed rule change as described in Items I and II below, which Items have been prepared by the Exchange. The Commission is publishing this notice to solicit comments on the proposed rule change from interested persons.

I. Self-Regulatory Organization's Statement of the Terms of Substance of the Proposed Rule Change

Cboe EDGA Exchange, Inc. (''EDGA'' or the ''Exchange'') is filing with the Securities and Exchange Commission (the ''Commission'') a proposed rule change to amend EDGA Rule 11.8(e), which describes the handling of MidPoint Discretionary Orders entered on the Exchange. The text of the proposed rule change is provided in Exhibit 5.

The text of the proposed rule change is also available on the Exchange's website (*http://markets.cboe.com/us/equities/regulation/rule_filings/edga/*), at the Exchange's Office of the Secretary, and at the Commission's Public Reference Room.

II. Self-Regulatory Organization's Statement of the Purpose of, and Statutory Basis for, the Proposed Rule Change

In its filing with the Commission, the Exchange included statements concerning the purpose of and basis for the proposed rule change and discussed any comments it received on the proposed rule change. The text of these statements may be examined at the places specified in Item IV below. The Exchange has prepared summaries, set forth in sections A, B, and C below, of the most significant aspects of such statements.

A. Self-Regulatory Organization's Statement of the Purpose of, and Statutory Basis for, the Proposed Rule Change

1. Purpose

A MidPoint Discretionary Order (''MDO'') is a limit order to buy that is pegged to the national best bid (''NBB''), with discretion to execute at prices up to and including the midpoint of the national best bid or offer (''NBBO''), or a limit order to sell that is pegged to the national best offer (''NBO''), with discretion to execute at prices down to and including the midpoint of the NBBO.[3] The purpose of the proposed rule change is to amend EDGA Rule 11.8(e) to introduce two optional instructions that Users would be able to include on MDOs entered on the Exchange. First, the Exchange would allow Users to enter MDOs with an offset to the NBBO, similar to orders entered with a Primary Peg Instruction today.[4] Second, the Exchange would allow Users to enter MDOs that include a Quote Depletion Protection (''QDP'') instruction that would disable discretion for a limited period in certain circumstances where the best bid or offer displayed on the EDGA Book is executed or cancelled below one round lot. The Exchange believes that both of these features would enhance the usefulness of MDOs to members and investors, and would allow the exchange to better compete with other national securities exchanges that currently offer order types that include similar features.

Offset Instruction

As explained, MDOs are pegged to the same side of the NBBO, with discretion to execute at prices to and including the midpoint of the NBBO. An MDO is therefore similar to an order entered with both a Primary Peg instruction and an instruction to exercise discretion to the NBBO midpoint. It is also similar to certain order types offered by other national securities exchanges, including Discretionary Peg Orders offered by the Investors Exchange LLC (''IEX'').[5]

[1] 15 U.S.C. 78s(b)(1).

[2] 17 CFR 240.19b–4.

[3] *See* EDGA Rule 11.8(e).

[4] *See* EDGA Rule 11.6(j)(2).

[5] *See* IEX Rule 11.190(b)(10). Discretionary Peg Orders on IEX are posted at the less aggressive of

Continued

Users can include an offset on orders entered on the Exchange that include a Primary Peg instruction, which allows them to specify that the order be pegged to a price above or below the NBB or NBO to which the order is pegged. Specifically, pursuant to Rule 11.6(j)(2), which defines the Primary Peg instruction, a User may, but is not required to, select an offset equal to or greater than one Minimum Price Variation (''MPV'') above or below the applicable NBB or NBO. Although an offset is generally available to Users that enter an order with the Primary Peg instruction, it is not available for an MDO that is similarly pegged to the same side of the NBBO—*i.e.,* pegged to NBB for buy orders, or NBO for sell orders. The Exchange now proposes to extend the flexibility to include an offset instruction to MDOs, thus increasing the usefulness of this order type.

As proposed, MDOs entered with an offset would function in the same manner as currently implemented for Primary Peg orders entered with an offset pursuant to Rule 11.6(j)(2), thereby ensuring a familiar and consistent experience for Users. First, a User entering an MDO would be able to select an offset equal to or greater than one MPV above or below the NBB or NBO that the order is pegged to (''Offset Amount''). Second, the Offset Amount for an MDO that is to be displayed on the EDGA Book would need to result in the price of such order being inferior to or equal to the inside quote on the same side of the market.[6] Although the Exchange expects that some Users may continue to want MDOs that are ranked at the same side of the NBBO without any offset, certain other Users may find the offset functionality useful as it would allow them to specify more or less aggressive pegged prices for MDOs resting on the EDGA Book. The Exchange is therefore proposing to introduce the offset functionality as an optional feature that can be included at the preference of the User entering an MDO for trading on the Exchange.

The proposed changes related to the offset instruction are included in proposed subparagraph (9) under EDGA Rule 11.8(e). In addition, the Exchange proposes to make conforming changes to language currently included in EDGA Rule 11.8(e). First, the MDO definition would be amended to provide that an MDO is pegged to the NBB or NBO ''with or without an offset.'' Second, language that describes when an MDO is executable at its limit price would be amended to state that an MDO to buy (sell) with a limit price that is less (higher) than its pegged price, including any offset, is posted to the EDGA Book at its limit price. This change would replace references to circumstances where an MDO is posted to the EDGA Book at its limit price due to such limit price being less aggressive than the prevailing NBB or NBO, as the applicable NBB or NBO is not the relevant pegged price for MDOs entered with an offset. Third, the Exchange would amend language contained in EDGA Rule 11.8(e)(6) and (8), which deal with limit up-limit down (''LULD'') and locked/crossed market handling, respectively, to account for the fact that an MDO entered with an offset would not be posted at the NBB or NBO. Specifically, the Exchange would amend EDGA Rule 11.8(e)(6) to reference handling in situations where the applicable LULD price band is at or through the ''the order's pegged price'' rather than ''an existing Protected Bid'' or ''an existing Protected Offer.'' With the introduction of an offset, the Exchange's LULD handling would only apply when the LULD price band is at or through the pegged price of the MDO, which could be different from the price of an existing Protected Bid or Offer. Similarly, the Exchange would amend EDGA Rule 11.8(e)(8) to provide that an MDO's pegged price would be adjusted to the current NBO (for bids) or NBB (for offers), when ''an MDO posted on'' the EDGA Book is crossed by another market. The current version of the rule references the EDGA Book being crossed by another market since the MDO would be posted at the best price available on the Exchange (*i.e.,* the applicable NBB or NBO). With the introduction of an offset, however, an MDO may be more or less aggressive than the NBB or NBO, and this handling would apply when the posted MDO is itself crossed by another market. Each of these changes are meant to reflect the proposed operation of MDOs that are entered with an offset, as previously described, and would not otherwise impact the handling of MDOs entered on the Exchange.

Quote Depletion Protection

The Exchange also proposes to introduce an optional instruction that Users would be able to include on an MDO to limit the order's ability to exercise discretion in certain circumstances: ''Quote Depletion Protection'' or ''QDP.''[7] Similar to crumbling quote features offered for Discretionary Peg Orders entered on IEX, QDP would restrict the exercise of discretion on MDOs entered with this instruction in circumstances where applicable market conditions indicate that it may be less desirable to execute within an order's discretionary range.[8] The QDP feature would do this by tracking significant executions or cancellations of orders that constitute the best bid or offer on EDGA.[9] As proposed, a ''QDP Active Period'' would be enabled or refreshed for buy (sell) MDOs if the best bid (offer) displayed on the EDGA Book is either: (A) Executed below one round lot; or (B) at the national best bid (offer) and cancelled below one round lot.[10] During this QDP Active Period, an MDO entered with a QDP instruction would not exercise discretion for a limited period of time. Instead, such an order would be only be executable at its ranked price.[11]

Once activated, the QDP Active Period would remain in place to prevent the execution of MDOs within their discretionary ranges for a specified period. Specifically, the Exchange proposes that when a QDP Active Period is initially enabled, or refreshed by a subsequent execution or cancellation of the best bid (offer) then

one MPV less aggressive than the primary quote or the order's limit price.

[6] An MDO defaults to a Displayed instruction unless the User includes a Non-Displayed instruction on the order. *See* EDGA Rule 11.8(e)(4). Similar to the current handling of orders entered with a Primary Peg instruction, the Exchange is not proposing to accept displayed MDOs with an aggressive offset at this time. Such orders would add functionality to the Exchange that would effectively set the NBBO through a pegged order, and the Exchange believes that this could potentially add complexity to its System.

[7] Proposed changes related to the introduction of the QDP instruction are reflected in proposed subparagraph (10) under EDGA Rule 11.8(e).

[8] A Discretionary Peg order resting on IEX is only eligible to trade at its resting price during periods of ''quote instability.'' *See* IEX Rule 11.190(b)(10). In turn, IEX Rule 11.190(g) describes IEX's quote instability calculation, which uses a proprietary mathematical formula ''to assess the probability of an imminent change to the current Protected NBB to a lower price or Protected NBO to a higher price.''

[9] The Exchange would look to the terms of any replacement order to determine if an order modified by a cancel/replace message pursuant to EDGA Rule 11.10(e) qualifies as a cancellation that would trigger a QDP Active Period. For example, a cancel/replace message that increases the size of an order would not trigger a QDP Active Period, notwithstanding that the message cancels the order before replacing it with greater size.

[10] Rule 611 of Regulation NMS generally limits executions to prices that are at or better than the protected best bid or offer. However, there are circumstances, such as the use of intermarket sweep orders, where an order may be executed at an inferior price. In these circumstances, an execution of the EDGA BBO below one round lot would trigger a QDP Active Period even though that quotation is inferior to the NBBO.

[11] An MDOs ranked price is the order's displayed or non-displayed pegged price, which may or may not include an offset, as proposed, or the order's limit price if that limit price is less aggressive than the applicable pegged price.

displayed on the EDGA Book, it would remain enabled for a configurable period of up to five milliseconds. The Exchange would determine the duration of the QDP Active Period, and would publish this value in a circular distributed to members. As the Exchange gains experience with the proposed QDP functionality, it may revise the chosen duration to better reflect the needs of members and investors using the instruction. Such changes would be made with the goal of facilitating the protection provided by the QDP instruction, while at the same time not unduly limiting the ability of orders entered with this instruction to exercise discretion and execute at more aggressive prices within the order's discretionary range.

Finally, since the QDP instruction is designed to protect resting MDOs based on the execution or cancellation of the best bids and offers displayed on the EDGA Book, the Exchange anticipates that Users may prefer to utilize the QDP instruction along with an offset instruction that results in the MDO being posted at a price that is inferior to the applicable NBB or NBO (with discretion to the midpoint). The Exchange also believes that given the less aggressive offset, and the fact that these orders are seeking additional protection, there may be less incentive for Users to include a Displayed instruction. As a result, unless the User chooses otherwise, an MDO to buy (sell) entered with a QDP instruction would default to a Non-Displayed instruction and would include an Offset Amount equal to one Minimum Price Variation below (above) the NBB (NBO).[12] This implementation is similar to the implementation of Discretionary Peg Orders on IEX but would permit Users to change these default instructions based on their specific needs.[13]

Examples. The examples below illustrate the proposed operation of the QDP instruction:[14]

Example 1:

QDP Active Period = 2 milliseconds
NBBO: $10.00 × $10.01
Order 1: Buy 100 shares @$10.00 Displayed
Order 2: Buy 200 shares @$10.01—MDO with QDP, Hidden, Offset = − $0.01
Order 3: Sell 1 shares @$10.00 IOC—Time = 12:00:00:000
Order 4: Sell 100 shares @$10.00 Midpoint Pegged IOC—Time = 12:00:00:001

Order 2, which is an MDO to buy, is ranked at $9.99 non-displayed with discretion to the midpoint price of $10.005. When Order 3 is entered it will trade a single share with Order 1 at $10.00, triggering a QDP Active Period for Order 2 because of the execution of the EDGA Best Bid below one round lot. This restricts the ability for Order 2 to exercise discretion for two milliseconds, and prevents the execution of Order 4 within Order 2's discretionary range. As a result, the Order 4 would be cancelled without an execution.

Example 2:

QDP Active Period = 2 milliseconds
NBBO: $10.00 × $10.01
Order 1: Buy 100 shares @$10.00 Displayed
Order 2: Buy 200 shares @$10.01—MDO with QDP, Hidden, Offset = − $0.01
Order 3: Sell 200 shares @$9.99 ISO IOC—Time = 12:00:00:000

This example is the same as Example 1, except that Order 3 is an ISO IOC for 200 shares that is priced equal to the non-displayed ranked price of Order 2, and there is no Order 4. Order 3 would trade 100 shares with Order 1 at $10.00, triggering a QDP Active Period. However, the triggering of a QDP Active Period would not prevent the execution of an MDO at its ranked price. As a result, Order 3 would trade its remaining 100 shares with Order 2 at $9.99.

Example 3:

QDP Active Period = 2 milliseconds
NBBO: $10.00 × $10.01
Order 1: Buy 100 shares @$10.00 Displayed
Order 2: Buy 200 shares @$10.01—MDO with QDP, Hidden, Offset = − $0.01
Order 3: Sell 100 share @$10.00 IOC—Time = 12:00:00:000
Order 4: Sell 100 shares @$10.00 Midpoint Pegged IOC—Time = 12:00:00:003

This example is the same as Example 1, except that Order 3 is for 100 shares and Order 4 is entered after the QDP Active Period has concluded. In this example, Order 3 would trade 100 shares with Order 1 at $10.00, triggering a QDP Active Period. The QDP Active Period triggered by the execution of the EDGA Best Bid below one round lot would be disabled after two milliseconds, and Order 4 would execute 100 shares against Order 2 at $10.005.

Example 4:

QDP Active Period = 2 milliseconds
NBBO: $10.00 × $10.01
Order 1: Buy 100 shares @$10.00 Displayed
Order 2: Buy 200 shares @$10.01—MDO with QDP, Hidden, Offset = − $0.01
Order 3: Sell 200 shares @$10.00 IOC—Time = 12:00:00:000

Order 2, which is an MDO to buy, is ranked at $9.99 non-displayed with discretion to the midpoint price of $10.005. When Order 3 is entered it would first trade 100 shares with Order 1 at $10.00. A QDP Active Period is then immediately enabled for Order 2 because of the execution of the EDGA Best Bid below one round lot. This restricts the ability for Order 2 to exercise discretion for two milliseconds, and prevents the execution of the remaining 100 shares of Order 3 within Order 2's discretionary range. As a result, the remaining quantity of Order 3 would be cancelled.

Example 5:

QDP Active Period = 2 milliseconds
NBBO: $10.00 × $10.01
Order 1: Buy 100 shares @$10.00 Displayed
Order 2: Buy 200 shares @$10.01—MDO with QDP, Hidden, Offset = − $0.01
Order 1: Full Cancel—Time = 12:00:00:000
Order 3: Sell 200 shares @$10.00 IOC—Time = 12:00:00:001

This example is the same as Example 4, except that Order 1 is cancelled one millisecond before the receipt of Order 3. Because Order 1, which establishes the EDGA Best Bid, is priced at the NBB, a QDP Active period would be immediately enabled following its cancellation. This restricts the ability for Order 2 to exercise discretion for two milliseconds, and prevents the execution of Order 3 within Order 2's discretionary range. As a result, Order 3 would be cancelled without an execution.

Example 6:

QDP Active Period = 2 milliseconds
NBBO: $10.00 × $10.01
Order 1: Sell 100 shares @$10.01 Displayed
Order 2: Buy 200 shares @$10.01—MDO with QDP, Hidden, Offset = − $0.01
Order 1: Full Cancel—Time = 12:00:00:000
Order 3: Sell 200 shares @$10.00 IOC—Time = 12:00:00:001

This example is the same as Example 5, except that Order 1 is an offer priced at the NBO rather than a bid at the NBB. A QDP Active Period for an MDO would

[12] The Exchange also proposes to amend EDGA Rule 11.8(e)(4) to reflect the fact that MDOs entered with a QDP instruction would default to Non-Displayed. MDOs that are not entered with the QDP instruction would continue to default to a Displayed instruction, as currently provided in EDGA Rule 11.8(e)(4).

[13] As previously discussed, Discretionary Peg Orders on IEX are posted at the less aggressive of one MPV less aggressive than the primary quote or the order's limit price. *See* supra note 5. Such orders are also Non-Displayed. *See* IEX Rule 11.190(a)(3).

[14] For purposes of these examples, orders are reflected in the order in which they are received, and only the identified orders are present on the EDGA Book.

only enabled by an execution or cancellation of an order on the same side of the market. Thus, Order 2, which is an MDO to buy, would not be impacted by the cancellation of Order 1, which is an order to sell. As a result, Order 3 would execute 200 shares with Order 2 at $10.00.

Example 7:

QDP Active Period = 2 milliseconds
NBBO: $10.00 × $10.01
Order 1: Buy 100 shares @$9.99 Displayed
Order 2: Buy 200 shares @$10.01—MDO with QDP, Hidden, Offset = − $0.01
Order 1: Full Cancel—Time = 12:00:00:000
Order 3: Sell 200 shares @$10.00 IOC—Time = 12:00:00:001

This example is the same as Example 5, except that Order 1 is entered at a price that is inferior to the NBB. Because Order 1 is not at the NBB, its cancellation does not trigger a QDP Active Period. As a result, Order 3 would trade 200 shares with Order 2 at $10.00.

Example 8:

QDP Active Period = 2 milliseconds
NBBO: $10.00 × $10.01
Order 1: Buy 100 shares @$9.99 Displayed
Order 2: Buy 100 shares @10.00 Displayed
Order 3: Buy 100 shares @$10.01—MDO with QDP, Hidden, Offset = − $0.02
Order 4: Sell 100 shares @$10.00 IOC—Time = 12:00:00:000
Order 5: Sell 100 shares @$9.99 ISO IOC—Time = 12:00:00:001
Order 6: Sell 100 shares @$10.00 ISO IOC—Time = 12:00:00:002

Order 3, which is an MDO to buy, is ranked at $9.98 non-displayed with discretion to the midpoint price of $10.005. When Order 4 is entered it would trade 100 shares with Order 2 at $10.00. A QDP Active Period is then immediately enabled for Order 3 because of the execution of the EDGA Best Bid below one round lot. This restricts the ability for Order 3 to exercise discretion for two milliseconds. When Order 5 is entered it would trade 100 shares with Order 1, which is now the EDGA Best Bid, at $9.99, refreshing the QDP Active Period and extending it until 12:00:00:003. When Order 6 is entered it would be cancelled without an execution as Order 3 would still be subject to the extended QDP Active Period.

2. Statutory Basis

The Exchange believes the proposed rule change is consistent with the requirements of Section 6(b) of the Act,[15] in general, and Section 6(b)(5) of the Act,[16] in particular, in that it is designed to remove impediments to and perfect the mechanism of a free and open market and a national market system, to promote just and equitable principles of trade, and, in general, to protect investors and the public interest and not to permit unfair discrimination between customers, issuers, brokers, or dealers. The two proposed changes would increase the usefulness of MDOs offered by the Exchange, and would allow the Exchange to better compete with order types on other national securities exchanges that offer similar features to their members.

Offset Instruction for MDOs

The Exchange believes that it is consistent with the protection of investors and the public interest to introduce an offset instruction that Users could choose to include on their MDOs.[17] With this proposed change, MDOs would behave similarly to orders entered with a Primary Peg instruction today in that such orders could be entered with an offset that results in the order being pegged to a price that is more or less aggressive than the applicable NBB or NBO on the same side of the market (*i.e.,* NBB for buy orders and NBO for sell orders). This change would make MDOs a more flexible tool for members and investors. Further, the introduction of the offset instruction on MDOs would be similar to and competitive with features offered on other national securities exchanges that offer similar order types. For example, Discretionary Peg Orders offered on IEX are pegged one MPV less aggressive than the applicable NBB or NBO when posted to the order book, with discretion to the midpoint of the NBBO (subject to the order's limit price). Introducing an offset instruction for MDOs offered on EDGA would allow members and investors that trade on the Exchange to utilize similar functionality. Such functionality could be used for a number of purposes, including to mitigate risk by posting an order at a price that is lower (higher) than the prevailing NBB (NBO). At the same time, the offset instruction would be offered on a purely voluntary basis, and with flexibility for Users to choose the amount of any offset, thereby maintaining flexibility to continue using the current offering, which pegs MDOs to the applicable NBB or NBO without an offset, and to choose different offsets based on a User's specific needs. As is the case for orders entered with a Primary Peg instruction and an offset, displayed MDOs would not be accepted with an offset that results in such orders being posted at a price that is better than the applicable NBB or NBO. Users that wish to enter an MDO with an aggressive offset would be required to enter such orders with a non-displayed instruction, thereby ensuring that such orders would not be eligible to set a new NBBO, which the Exchange believes may unnecessarily increase the complexity of its System.[18]

Quote Depletion Protection

The Exchange also believes that it is consistent with the protection of investors and the public interest to introduce the QDP instruction to provide additional protection to Users that enter MDOs with this instruction. Similar to Discretionary Peg Orders offered by IEX, the QDP instruction would provide Users with protective features that would limit the order's ability to exercise discretion in certain circumstances that may be indicative of a quotation that is moving against the resting MDO—*i.e.,* a buy quotation that is moving to a lower price for MDOs to buy, or a sell quotation that is moving to a higher price for MDOs to sell. The specific trigger for enabling a QDP Active Period, or refreshing a QDP Active Period that has already been enabled, would be based on the execution or cancellation of the best bid or offer displayed by the Exchange on the same side of the market. Any trade that results in such bid or offer being executed below one round lot would trigger a QDP Active Period. A cancellation of the Exchange's best bid or offer below one round lot, however, would only trigger a QDP Active period if such best bid or offer quotation is also at the NBBO. The Exchange believes that a cancellation of orders displayed at the Exchange's best bid or offer, but not at the NBBO, may not be indicative of an quotation that is about to transition to a less aggressive price, and is therefore proposing to limit the triggering of a QDP Active Period to instances where that quotation is at the best price available in the market. When a QDP Active Period is enabled or refreshed, the MDO would forgo discretion for a limited period but would remain executable at its

[15] 15 U.S.C. 78f(b).

[16] 15 U.S.C. 78f(b)(5).

[17] The Exchange notes that technical changes proposed to EDGA Rule 11.8(e), including paragraphs (6) and (8) thereunder merely reflect language changes that are necessary since an MDO would be allowed with an offset. The Exchange believes that these changes would promote just and equitable principles of trade as they would ensure that MDO handling remains transparent with the introduction of the offset instruction.

[18] *See supra* note 6.

displayed or non-displayed ranked price. Thus, the QDP instruction may provide additional comfort to Users entering MDOs that would allow them to utilize discretion, and thereby provide potential price improvement opportunities to incoming orders, while at the same time limiting the exercise of discretion in circumstances where an execution within the order's discretionary range may be undesirable. The Exchange therefore believes that the introduction of the QDP instruction would remove impediments to and perfect the mechanism of a free and open market and a national market system. Further, while the QDP instruction would be available to all Users, use of this instruction would be voluntary, meaning that Users could choose to use this instruction, or not, based on their specific needs.

B. Self-Regulatory Organization's Statement on Burden on Competition

The Exchange does not believe that the proposed rule change would impose any burden on competition that is not necessary or appropriate in furtherance of the purposes of the Act. To the contrary, the proposal is a competitive response to similar features available on other markets, such as IEX, and would therefore facilitate increased competition between exchange markets. As with other national securities exchanges, the Exchange must continually assess and improve its offerings to compete with other exchanges and off-exchange venues. The proposed rule change is indicative of this competition. Further, the Exchange does not believe that the proposed rule change would implicate any competitive concerns with respect to its Users. Both instructions proposed to be introduced for MDOs with this filing would be available to all Users on an equal and non-discriminatory basis. Rather than impede competition, the proposed rule change would provide additional tools for members and investors to facilitate their trading goals.

C. Self-Regulatory Organization's Statement on Comments on the Proposed Rule Change Received From Members, Participants, or Others

No comments were solicited or received on the proposed rule change.

III. Date of Effectiveness of the Proposed Rule Change and Timing for Commission Action

Within 45 days of the date of publication of this notice in the **Federal Register** or within such longer period up to 90 days (i) as the Commission may designate if it finds such longer period to be appropriate and publishes its reasons for so finding or (ii) as to which the self-regulatory organization consents, the Commission will:

(A) By order approve or disapprove the proposed rule change, or

(B) institute proceedings to determine whether the proposed rule change should be disapproved.

IV. Solicitation of Comments

Interested persons are invited to submit written data, views, and arguments concerning the foregoing, including whether the proposed rule change is consistent with the Act. Comments may be submitted by any of the following methods:

Electronic Comments

- Use the Commission's internet comment form (*http://www.sec.gov/rules/sro.shtml*); or
- Send an email to *rule-comments@sec.gov*. Please include File Number SR–CboeEDGA–2020–005 on the subject line.

Paper Comments

- Send paper comments in triplicate to Secretary, Securities and Exchange Commission, 100 F Street NE, Washington, DC 20549–1090.

All submissions should refer to File Number SR–CboeEDGA–2020–005. This file number should be included on the subject line if email is used. To help the Commission process and review your comments more efficiently, please use only one method. The Commission will post all comments on the Commission's internet website (*http://www.sec.gov/rules/sro.shtml*). Copies of the submission, all subsequent amendments, all written statements with respect to the proposed rule change that are filed with the Commission, and all written communications relating to the proposed rule change between the Commission and any person, other than those that may be withheld from the public in accordance with the provisions of 5 U.S.C. 552, will be available for website viewing and printing in the Commission's Public Reference Room, 100 F Street NE, Washington, DC 20549 on official business days between the hours of 10:00 a.m. and 3:00 p.m. Copies of the filing also will be available for inspection and copying at the principal office of the Exchange. All comments received will be posted without change. Persons submitting comments are cautioned that we do not redact or edit personal identifying information from comment submissions. You should submit only information that you wish to make available publicly. All submissions should refer to File Number SR–CboeEDGA–2020–005, and should be submitted on or before March 31,2020.

For the Commission, by the Division of Trading and Markets, pursuant to delegated authority.[19]

J. Matthew DeLesDernier,

Assistant Secretary.

[FR Doc. 2020–04901 Filed 3–9–20; 8:45 am]

BILLING CODE 8011–01–P

SECURITIES AND EXCHANGE COMMISSION

[Release No. 34–88319; File Nos. SR–NYSE–2019–46, SR–NYSENAT–2019–19, SR–NYSEArca–2019–61, SR–NYSEAMER–2019–34]

Self-Regulatory Organizations; New York Stock Exchange LLC; NYSE National, Inc.; NYSE Arca, Inc.; NYSE American LLC; Notice of Designation of Longer Period for Commission Action on Proceedings To Determine Whether To Approve or Disapprove a Proposed Rule Change, as Modified by Amendment No. 1, To Amend the Exchanges' Co-Location Services To Offer Co-Location Users Access to the NMS Network

March 4, 2020.

On August 22, 2019, New York Stock Exchange LLC, NYSE National, Inc., and NYSE Arca, Inc. each filed with the Securities and Exchange Commission (''Commission''), pursuant to Section 19(b)(1) of the Securities Exchange Act of 1934 (''Act'')[1] and Rule 19b–4 thereunder,[2] a proposed rule change to amend their co-location fee schedules to offer co-location Users access to the ''NMS Network''—an alternate, dedicated network providing connectivity to data feeds for the National Market System Plans for which Securities Industry Automation Corporation (''SIAC'') is engaged as the exclusive securities information processor (''SIP'')—and establish associated fees. NYSE American LLC filed with the Commission a substantively identical filing on August 23, 2019.[3] The proposed rule changes were published for comment in the **Federal Register** on September 10,

[19] 17 CFR 200.30–3(a)(12).

[1] 15 U.S.C. 78s(b)(1).

[2] 17 CFR 240.19b–4.

[3] The New York Stock Exchange LLC, NYSE National, Inc., NYSE Arca, Inc., and NYSE American, LLC are collectively referred to herein as ''NYSE'' or the ''Exchanges.''

2019.[4] On October 24, 2019, the Commission extended the time period within which to approve the proposed rule changes, disapprove the proposed rule changes, or institute proceedings to determine whether to approve or disapprove the proposed rule changes, to December 9, 2019.[5] The Commission received one comment letter on the Original Proposal, a response from the Exchanges, and a second letter from the original commenter.[6] On December 9, 2019, the Commission instituted proceedings to determine whether to approve or disapprove the Original Proposal.[7] On December 23, 2019, the Exchange filed Amendment No. 1 to the Original Proposal. Amendment No. 1, which superseded and replaced the Original Proposal in its entirety, was published for comment in the **Federal Register** on January 15, 2020.[8] The Commission received another comment letter on the proposal, as modified by Amendment No. 1, and a response from the Exchanges.[9]

Section 19(b)(2) of the Act[10] provides that, after initiating proceedings, the Commission shall issue an order approving or disapproving the proposed rule change not later than 180 days after the date of publication of notice of the filing of the proposed rule change. The Commission may extend the period for issuing an order approving or disapproving the proposed rule change, however, by not more than 60 days if the Commission determines that a longer period is appropriate and publishes the reasons for such determination. The proposed rule changes were published for comment in the **Federal Register** on September 10, 2019.[11] The 180th day after publication of the Notice is March 8, 2020. The Commission is extending the time period for approving or disapproving the proposal for an additional 60 days.

The Commission finds that it is appropriate to designate a longer period within which to issue an order approving or disapproving the proposed rule change so that it has sufficient time to consider the proposed rule change, as modified by Amendment No. 1, along with the comment received on Amendment No. 1 and the Exchange's response. Accordingly, the Commission, pursuant to Section 19(b)(2) of the Act,[12] designates May 7, 2020, as the date by which the Commission should either approve or disapprove the proposed rule change (File Nos. SR–NYSE–2019–46, SR–NYSENAT–2019–19, SR–NYSEArca–2019–61, SR–NYSEAMER–2019–34), as modified by Amendment No. 1.

For the Commission, by the Division of Trading and Markets, pursuant to delegated authority.[13]

J. Matthew DeLesDernier,

Assistant Secretary.

[FR Doc. 2020–04787 Filed 3–9–20; 8:45 am]

BILLING CODE 8011–01–P

[4] *See* Securities Exchange Act Release Nos. 86865 (September 4, 2019), 84 FR 47592 (SR–NYSE–2019–46); 86869 (September 4, 2019), 84 FR 47600 (SR–NYSENAT–2019–19); 86868 (September 4, 2019), 84 FR 47610 (SR–NYSEArca–2019–61); 86867 (September 4, 2019), 84 FR 47563 (SR–NYSEAMER–2019–34). The proposed rule change as set forth in these Notices is referred to as the ''Original Proposal.''

[5] *See* Securities Exchange Act Release Nos. 87399, 84 FR 58189 (October 30, 2019) (SR–NYSE–2019–46); 87402, 84 FR 58187 (October 30, 2019) (SR–NYSENAT–2019–19); 87400, 84 FR 58189 (October 30, 2019) (SR–NYSEArca–2019–61); 87401, 84 FR 58188 (October 30, 2019) (SR–NYSEAMER–2019–34).

[6] *See,* respectively, letter dated October 24, 2019 from John M. Yetter, Vice President and Senior Deputy General Counsel, Nasdaq Stock Market LLC (''Nasdaq''), to Vanessa Countryman, Secretary, Commission (''Nasdaq Letter''); letter dated November 8, 2019 from Elizabeth K. King, Chief Regulatory Officer, ICE, General Counsel and Corporate Secretary, NYSE to Ms. Vanessa Countryman, Secretary, Commission (''NYSE Response Letter''); and letter dated November 25, 2019 from Joan C. Conley, Senior Vice President and Corporate Secretary, Nasdaq, to Vanessa Countryman, Secretary, Commission (''Nasdaq Letter II''). All comments received by the Commission on the proposed rule change are available on the Commission's website at: *https://www.sec.gov/comments/sr-nyse-2019-46/srnyse201946.htm.* NYSE filed comment letters on behalf of all of the Exchanges.

[7] *See* Securities Exchange Act Release No. 87699 (December 9, 2019), 84 FR 68239 (December 13, 2019) (SR–NYSE–2019–46; SR–NYSENAT–2019–19; SR–NYSEArca–2019–61; SR–NYSEAMER–2019–34) (''OIP'').

[8] *See* Securities Exchange Act Releases No. 87927 (January 9, 2020), 85 FR 2468 (SR–NYSE–2019–46); 87930 (January 9, 2020), 85 FR 2459 (SR–NYSENAT–2019–19); 87929 (January 9, 2020), 85 FR 2453 (SR–NYSEAMER–2019–34); and 87928 (January 9, 2020), 85 FR 2447 (SR–NYSEArca–2019–61) (''Notice of Amendment No. 1''). Amendment No. 1 also is available at *https://www.sec.gov/comments/sr-nyse-2019-46/srnyse201946-6584636-201247.pdf.*

[9] *See,* respectively, letter dated February 5, 2020 from Joan C. Conley, Senior Vice President and Corporate Secretary, Nasdaq, to Vanessa Countryman, Secretary, Commission (''Nasdaq Letter III'') and letter dated February 25, 2020 from Elizabeth K. King, Chief Regulatory Officer, ICE, General Counsel and Corporate Secretary, NYSE to Ms. Vanessa Countryman, Secretary, Commission (''NYSE Response Letter II''). All comments received by the Commission on the proposed rule change are available on the Commission's website at: *https://www.sec.gov/comments/sr-nyse-2019-46/srnyse201946.htm.* NYSE filed comment letters on behalf of all of the Exchanges.

[10] 15 U.S.C. 78s(b)(2).

[11] *See supra* note 4.

[12] 15 U.S.C. 78s(b)(2).

[13] 17 CFR 200.30–3(a)(12).

SECURITIES AND EXCHANGE COMMISSION

[Release No. 34–88320; File No. SR–NASDAQ–2020–011]

Self-Regulatory Organizations; The Nasdaq Stock Market LLC; Notice of Filing of Proposed Rule Change To Amend Rules 4702(b)(14) and (b)(15) To Shorten the Holding Period Requirements for Midpoint Extended Life Orders and Midpoint Extended Life Orders Plus Continuous Book

March 4, 2020.

Pursuant to Section 19(b)(1) of the Securities Exchange Act of 1934 (''Act'')[1] and Rule 19b–4 thereunder,[2] notice is hereby given that on February 26, 2020, The Nasdaq Stock Market LLC (''Nasdaq'' or ''Exchange'') filed with the Securities and Exchange Commission (''SEC'' or ''Commission'') the proposed rule change as described in Items I and II below, which Items have been prepared by the Exchange. The Commission is publishing this notice to solicit comments on the proposed rule change from interested persons.

I. Self-Regulatory Organization's Statement of the Terms of Substance of the Proposed Rule Change

The Exchange proposes to amend Rules 4702(b)(14) and (b)(15) of the Exchange's Rulebook to shorten the holding period requirements for Midpoint Extended Life Orders and Midpoint Extended Life Orders Plus Continuous Book.

The text of the proposed rule change is available on the Exchange's website at *http://nasdaq.cchwallstreet.com,* at the principal office of the Exchange, and at the Commission's Public Reference Room.

II. Self-Regulatory Organization's Statement of the Purpose of, and Statutory Basis for, the Proposed Rule Change

In its filing with the Commission, the Exchange included statements concerning the purpose of and basis for the proposed rule change and discussed any comments it received on the proposed rule change. The text of these statements may be examined at the places specified in Item IV below. The Exchange has prepared summaries, set forth in sections A, B, and C below, of the most significant aspects of such statements.

[1] 15 U.S.C. 78s(b)(1).

[2] 17 CFR 240.19b–4.

A. Self-Regulatory Organization's Statement of the Purpose of, and Statutory Basis for, the Proposed Rule Change

1. Purpose

The Exchange proposes to amend Rules 4702(b)(14) and (15) of the Exchange's Rulebook to shorten the holding period requirements for its Midpoint Extended Life Order (''M–ELO'') and Midpoint Extended Life Order Plus Continuous Book (''M–ELO+CB'') Order Types.

In 2018, the Exchange introduced the M–ELO, which is a Non-Displayed Order priced at the Midpoint between the National Best Bid and Offer (''NBBO'') and which is eligible for execution only against other eligible M–ELOs and only after a minimum of one-half second passes from the time that the System accepts the order (the ''Holding Period'').[3] In 2019, the Exchange introduced the M–ELO+CB, which closely resembles the M–ELO, except that a M–ELO+CB may execute at the midpoint of the NBBO, not only against other eligible M–ELOs (and M–ELO+CBs), but also against Non-Displayed Orders with Midpoint Pegging and Midpoint Peg Post-Only Orders (''Midpoint Orders'') that rest on the Continuous Book for at least one-half second and have Midpoint Trade Now enabled.[4] For both M–ELOs and M–ELO+CBs, the Holding Period is the same length of time.

When the Exchange designed M–ELO, it set the length of the Holding Period at one-half second because it determined that this time period would be sufficient to ensure that likeminded investors would interact only with each other, and with minimal market impacts. Additionally, the Exchange chose one-half second because it was then, and it remains today, a time period that is significantly longer than the delay mechanisms that other exchanges employ for similar purposes, such as the IEX 350 microsecond speed bump. The Exchange believed that the longer length of the M–ELO Holding Period and its simplicity in design would provide greater protection for participants than they could achieve through competing delay mechanisms.

Although the Holding Period requirement is a key design element of both the M–ELO and the M–ELO+CB, the length of that Holding Period is not sacrosanct. After adopting the M–ELO, the Exchange studied the actual use and performance of M–ELOs, as well as customer feedback, and make refinements, as necessary, to improve its operation and effectiveness. Indeed, such study and feedback is what prompted the Exchange last year to introduce the M–ELO+CB Order Type as well as to enhance M–ELO by permitting odd-lot order sizes.[5]

Now, after observing M–ELO and M–ELO+CB trading over the past two years, and after gathering feedback from market participants, in particular those that trade with a longer time horizon and who are concerned with market impact, the Exchange has determined that the length of the Holding Period can and should be re-calibrated. Although the Exchange designed M–ELO and M–ELO+CB for use by market participants that are less concerned with achieving rapid executions of their Orders than are other participants, that is not to say that M–ELO and M–ELO+CB users are indifferent about the length of time in which their M–ELOs and M–ELO+CBs must wait before they are eligible for execution. Indeed, participants have informed the Exchange that in certain circumstances, such as when they seek to trade symbols that on average have a lower time-to-execution than a half-second, they are reticent to enter M–ELOs or M–ELO+CBs because even though they want the protections that M–ELO and M–ELO+CB provide, the associated Holding Periods for these Order Types are too long and present countervailing risks. That is, the Holding Periods are longer than necessary and, during the residual portion of the Holding Periods, participants risk losing out on favorable execution opportunities that would otherwise be available to them had they placed a non-MELO order. The Exchange also notes that many institutional routing strategies recalibrate using a ''heatmap'' where they will route an order based on where trade activity is occurring, at times; this recalibration occurs prior to the completion of the M–ELO and M–ELO+CB Holding Periods. For such participants, the opportunity cost of missed execution opportunities may outweigh the protective benefits that M–ELOs and M–ELO+CBs provide.

Based upon this feedback, the Exchange studied the potential effects of reducing the length of the Holding Periods for both M–ELOs and M–ELO+CBs (as well as for Midpoint Orders that would execute against M–ELO+CBs). Ultimately, the Exchange determined that it could reduce the Holding Periods to 10 milliseconds without compromising the protective power that M–ELO and M–ELO+CB are intended to provide to participants and investors. Indeed, the Exchange examined each of its historical M–ELO executions to determine at what Midpoints of the NBBO the M–ELOs would have executed if their Holding Periods had been shorter than one-half second (500 milliseconds). After examining the historical effects of shorter Holding Periods of between 10 milliseconds and 400 milliseconds, the Exchange determined that a reduction of the M–ELO Holding Period to as short as 10 milliseconds would have caused an average impact on markouts of only 0.10 basis points (across all symbols). In other words, compared to the execution price of an average M–ELO with a one-half second Holding Period, the Exchange found that a M–ELO with a 10 millisecond Holding Period would have had an average post-execution impact that was only a tenth of a basis point per share—a difference in protective effect that is immaterial.[6] Thus, the Exchange determined that shortening the Holding Periods to 10 milliseconds for M–ELOs and M–ELO+CBs would increase the efficacy of the mechanism while not undermining the power of those Order Types to fulfill their underlying purpose of minimizing market impacts. The Exchange notes that, even at a length of 10 milliseconds, the Holding Periods still will be as or more effective than the delay mechanisms that competing exchanges employ, such that the M–ELO and M–ELO+CB would remain among the highest-performing order types available to market participants. At the same time, the Exchange determined that a reduction in the Holding Periods to 10 milliseconds would dramatically add to the circumstances in which M–ELOs and M–ELO+CBs would be useful to participants. Accordingly, the Exchange proposes to amend Rules 4702(b)(14) and (15) to decrease to 10 milliseconds the length of the Holding Periods for M–ELOs and M–ELO+CB, along with the length of the corresponding resting period for Midpoint Orders on the Continuous Book that are eligible to interact with M–ELO+CBs.

[3] *See* Securities Exchange Act Release No. 34–82825 (March 7, 2018), 83 FR 10937 (March 13, 2018) (SR–NASDAQ–2017–074) (''M–ELO Approval Order'').

[4] *See* Securities Exchange Act Release No. 34–86938 (September 11, 2019), 84 FR 48978 (September 17, 2019) (SR–NASDAQ–2019–048) (''M–ELO+CB Approval Order'').

[5] *See* Securities Exchange Act Release No. 34–86416 (July 19, 2019), 84 FR 35918 (July 25, 2019) (SR–NASDAQ–2019–044).

[6] *See* Nasdaq, ''The Midpoint Extended Life Order (M–ELO); M–ELO Holding Period,'' available at *https://www.nasdaq.com/articles/the-midpoint-extended-life-order-m-elo%3A-m-elo-holding-period-2020-02-13* (analyzing effects of shortened Holding Periods on M–ELO performance).

The Exchange intends to make the proposed change effective for M–ELOs and M–ELO+CBs in the Second Quarter of 2020. The Exchange will publish a Trader Alert at least 14 days in advance of making the proposed change effective.

2. Statutory Basis

The Exchange believes that its proposal is consistent with Section 6(b) of the Act,[7] in general, and furthers the objectives of Section 6(b)(5) of the Act,[8] in particular, in that it is designed to promote just and equitable principles of trade, to remove impediments to and perfect the mechanism of a free and open market and a national market system, and, in general to protect investors and the public interest, by allowing for more widespread use of M–ELOs and M–ELO+CBs.

When the Commission approved the M–ELO and the M–ELO+CB, it determined that these Order Types are consistent with the Act because they ''could create additional and more efficient trading opportunities on the Exchange for investors with longer investment time horizons, including institutional investors, and could provide these investors with an ability to limit the information leakage and the market impact that could result from their orders.'' [9] Nothing about the Exchange's proposal should cause the Commission to revisit or rethink this determination. Indeed, the proposal will not alter the fundamental design of these Order Types, the manner in which they operate, or their effects.

Even with shortened 10 millisecond Holding Periods, M–ELOs and M–ELO+CBs will continue to provide their users with protection against information leakage and adverse selection—and they will do so at levels which are substantially undiminished from that which they provide now.[10] The 10 millisecond Holding Periods, moreover, will remain longer than any delay mechanisms which the Exchange's competitors presently employ.

At the same time, however, the proposal will benefit market participants and investors by reducing the opportunity costs of utilizing M–ELOs and M–ELO+CBs. The proposal, in other words, will re-calibrate the lengths of the Holding Periods so that M–ELOs and M–ELO+CBs will operate in the ''Goldilocks'' zone—their Holding Periods will not be so short as to render them unable to provide meaningful protections against information leakage and adverse selection, but the Holding Periods also will not be too long so as to cause participants and investors to miss out on favorable execution opportunities. Nasdaq believes the proposal will render M–ELOs and M–ELO+CBs more useful and attractive to market participants and investors, and this increased utility and attractiveness, in turn, will spur an increase in M–ELO and M–ELO+CB use cases on the Exchange, both from new and existing users of M–ELOs and M–ELO+CBs. Ultimately, the proposal should enhance market quality by opening up more use cases for midpoint executions on the Exchange.

The Exchange notes that use of M–ELOs and M–ELO+CBs remains voluntary for all market participants. Accordingly, if any market participant feels that the shortened Holding Period is still too long or too short or because competing venues offer more attractive delay mechanisms, then the participants are free to pursue other trading strategies or utilize other trading venues. They need not utilize M–ELOs or M–ELO+CBs.

Finally, the Exchange notes that it will continue to conduct real-time surveillance to monitor the use of M–ELOs and M–ELO+CBs to ensure that such usage remains appropriately tied to the intent of the Order Types. If, as a result of such surveillance, the Exchange determines that the shortened Holding Periods do not serve their intended purposes, or adversely impact market quality, then the Exchange will seek to make further re-calibrations.

B. Self-Regulatory Organization's Statement on Burden on Competition

The Exchange does not believe that the proposed rule change will impose any burden on competition not necessary or appropriate in furtherance of the purposes of the Act. To the contrary, the Exchange believes that this proposal will promote the competitiveness of the Exchange by rendering its M–ELO and M–ELO+CB Order Types more attractive to participants.

The Exchange adopted the M–ELO and M–ELO+CB as pro-competitive measures intended to increase participation on the Exchange by allowing certain market participants that may currently be underserved on regulated exchanges to compete based on elements other than speed. The proposed change continues to achieve this purpose. With shortened 10 millisecond Holding Periods, both M–ELOs and M–ELO+CBs will afford their users with a level of protection from information leakage and adverse selection that is not materially different from what they presently provide.[11] At the same time, the shortened Holding Period will increase opportunities to interact with other like-minded investors with longer time horizons while also lowering the opportunity costs for participants that utilize M–ELOs and M–ELO+CBs, particularly for securities that trade within the ''Goldilocks'' zone. In sum, the proposed changes will not burden competition, but instead may promote competition for liquidity in M–ELOs and M–ELO+CBs by broadening the circumstances in which market participants may find such Orders to be useful. With the proposed changes, market participants will be more likely to determine that the benefits of entering M–ELOs and M–ELO+CBs outweigh the risks of doing so.

The proposed change will not place a burden on competition among market venues, as any market may adopt an order type that operates similarly to a M–ELO or a M–ELO+CB with a 10 millisecond Holding Period.

C. Self-Regulatory Organization's Statement on Comments on the Proposed Rule Change Received From Members, Participants, or Others

No written comments were either solicited or received.

III. Date of Effectiveness of the Proposed Rule Change and Timing for Commission Action

Within 45 days of the date of publication of this notice in the **Federal Register** or within such longer period up to 90 days (i) as the Commission may designate if it finds such longer period to be appropriate and publishes its reasons for so finding or (ii) as to which the self-regulatory organization consents, the Commission will:

(A) By order approve or disapprove the proposed rule change, or

(B) institute proceedings to determine whether the proposed rule change should be disapproved.

IV. Solicitation of Comments

Interested persons are invited to submit written data, views, and arguments concerning the foregoing, including whether the proposed rule change is consistent with the Act. Comments may be submitted by any of the following methods:

[7] 15 U.S.C. 78f(b).

[8] 15 U.S.C. 78f(b)(5).

[9] M–ELO Approval Order, *supra* 83 FR at 10938–39; M–ELO+CB Approval Order, *supra,* 84 FR at 48980.

[10] *See* note 6, *supra.*

[11] *See id.*

Electronic Comments

- Use the Commission's internet comment form (*http://www.sec.gov/rules/sro.shtml*); or
- Send an email to *rule-comments@sec.gov*. Please include File Number SR–NASDAQ–2020–011 on the subject line.

Paper Comments

- Send paper comments in triplicate to Secretary, Securities and Exchange Commission, 100 F Street NE, Washington, DC 20549–1090.

All submissions should refer to File Number SR–NASDAQ–2020–011. This file number should be included on the subject line if email is used. To help the Commission process and review your comments more efficiently, please use only one method. The Commission will post all comments on the Commission's internet website (*http://www.sec.gov/rules/sro.shtml*). Copies of the submission, all subsequent amendments, all written statements with respect to the proposed rule change that are filed with the Commission, and all written communications relating to the proposed rule change between the Commission and any person, other than those that may be withheld from the public in accordance with the provisions of 5 U.S.C. 552, will be available for website viewing and printing in the Commission's Public Reference Room, 100 F Street NE, Washington, DC 20549, on official business days between the hours of 10:00 a.m. and 3:00 p.m. Copies of the filing also will be available for inspection and copying at the principal office of the Exchange. All comments received will be posted without change. Persons submitting comments are cautioned that we do not redact or edit personal identifying information from comment submissions. You should submit only information that you wish to make available publicly. All submissions should refer to File Number SR–NASDAQ–2020–011, and should be submitted on or before March 31, 2020.

For the Commission, by the Division of Trading and Markets, pursuant to delegated authority.[12]

J. Matthew DeLesDernier,

Assistant Secretary.

[FR Doc. 2020–04788 Filed 3–9–20; 8:45 am]

BILLING CODE 8011–01–P

[12] 17 CFR 200.30–3(a)(12).

SECURITIES AND EXCHANGE COMMISSION

[Investment Company Act Release No. 33810; File No. 811–08387]

Waterside Capital Corporation

March 4, 2020.

AGENCY: Securities and Exchange Commission (''Commission'').

ACTION: Notice.

Notice of an application for an order under section 8(f) of the Investment Company Act of 1940 (the ''Act'') declaring that the applicant has ceased to be an investment company.

Applicant: Waterside Capital Corporation.

Filing Dates: The application was filed on January 18, 2018, and amended on June 4, 2018, October 30, 2018, June 12, 2019, August 26, 2019, December 20, 2019, and February 26, 2020.

Hearing or Notification of Hearing: An order granting the request will be issued unless the Commission orders a hearing. Interested persons may request a hearing by writing to the Commission's Secretary and serving applicant with a copy of the request, personally or by mail. Hearing requests should be received by the Commission by 5:30 p.m. on March 30, 2020 and should be accompanied by proof of service on applicant, in the form of an affidavit or, for lawyers, a certificate of service. Pursuant to rule 0–5 under the Act, hearing requests should state the nature of the writer's interest, any facts bearing upon the desirability of a hearing on the matter, the reason for the request, and the issues contested. Persons who wish to be notified of a hearing may request notification by writing to the Commission's Secretary.

ADDRESSES: Secretary, U.S. Securities and Exchange Commission, 100 F Street NE, Washington, DC 20549–1090. Applicant: c/o Jolie Kahn, Esq., 12 E 49th Street, 11th Floor, New York, NY 10017.

FOR FURTHER INFORMATION CONTACT: Laura J. Riegel, Senior Counsel, at (202) 551–3038, or Daniele Marchesani, Assistant Chief Counsel, at (202) 551–6821 (Division of Investment Management, Chief Counsel's Office).

SUPPLEMENTARY INFORMATION: The following is a summary of the application. The complete application may be obtained via the Commission's website by searching for the file number, or for an applicant using the Company name box, at *http://www.sec.gov/search/search.htm* or by calling (202) 551–8090.

Summary of the Application

1. Applicant was incorporated under the laws of the Commonwealth of Virginia on July 13, 1993 and is registered under the Act as a closed-end investment company. It operated as a small business investment company under a license from the Small Business Administration (the ''SBA'') and was internally managed.[1]

2. On March 30, 2010, the SBA notified applicant that its account had been transferred to liquidation status and that its outstanding debentures plus accrued interest were due and payable within fifteen days of the notification. Applicant did not have sufficient liquid assets to make that payment and the SBA repurchased the debentures under a note agreement with applicant (the ''Note Agreement'').

3. On May 24, 2012, the SBA delivered to applicant a notice of an event of default for failure to meet the principal repayment schedule under the Note Agreement (the ''Notice''). Under the terms of the Notice and the Note Agreement, the SBA maintained a continuing right to terminate the Note Agreement and appoint a receiver to manage applicant's assets.

4. On November 20, 2013, the SBA filed a complaint in the United States District Court for the Eastern District of Virginia (the ''District Court'') seeking, among other things, receivership for applicant and a judgment in the amount outstanding under the Note Agreement plus continuing interest. On May 28, 2014, the District Court entered an order (the ''Order'') that appointed the SBA as receiver of applicant. The SBA designated a principal agent to act on its behalf as the receiver (the ''Receiver''). The Order authorized the Receiver to act for the purpose of marshaling and liquidating in an orderly manner all of applicant's assets (the ''Receivership''). The Order also served to enter judgment against applicant for its liability in excess of $11,000,000 to the SBA.

5. Applicant effectively stopped conducting an active business upon the appointment of the SBA as Receiver. Over the course of the Receivership, the activity of applicant was limited to the liquidation of applicant's assets by the Receiver and the payment of the proceeds to the SBA and for the expenses of the Receivership. Effective March 20, 2017, the SBA revoked the license that it had granted to applicant.

6. On June 28, 2017, the District Court entered an order that terminated the Receivership and discharged all claims and obligations of applicant other than

[1] Applicant's outstanding shares of common stock are traded on the Pink® Open Market.

the judgment held by the SBA (the ''Final Order''). Before the District Court entered the Final Order, the Receiver provided notice to all shareholders of applicant. The Receiver also initiated separate contacts with the largest shareholders of applicant in an attempt to identify a shareholder willing to assume responsibility for the control of applicant on behalf of applicant's shareholders. Roran Capital, LLC (''Roran'') was the only shareholder willing to assume such control.[2] At the direction of the Receiver, the Final Order stated that ''Control of Waterside shall be unconditionally transferred and returned to its shareholders c/o Roran Capital, LLC (''Roran'') upon notification of entry of this Order.'' In reliance on and in compliance with the Final Order, Roran appointed Zindel Zelmanovitch as the director and officer of applicant.[3]

7. In July 2017, Roran purchased from the SBA applicant's outstanding judgment owed to the SBA. On May 16, 2019, Roran forgave the entire principal amount and interest due under the judgment payable.

8. On September 19, 2017, applicant entered into a convertible loan agreement with Roran (the ''Loan Agreement'') with loans advanced under the terms of a convertible promissory note (the ''Note'').[4] The purpose of Roran's loans to the applicant, including subsequent ones under amendments to the Loan Agreement, has been to pay for applicant's reasonable operational expenses to third party service providers, consisting solely of expenses such as legal, accounting, transfer agent and edgarization costs, all at the actual cost for such services.[5] Roran agreed to fund reasonable expenses of applicant so long as progress was being made to reorganize applicant and to identify either (a) a new business to enter into; or, (b) an active business with which to merge or otherwise acquire.

9. Applicant states that it is and hold itself out as being engaged primarily in the business of seeking either (i) a new business to enter into; or, (ii) merger or acquisition candidates which would benefit from operating as a public entity; however, applicants represent that until the Application is approved, no such transaction is feasible. Applicant also states that it is not currently a party to any litigation or administrative proceedings.

10. Applicant represents that, if the requested order is granted, its shares of common stock will continue to be quoted on the Pink® Open Market.

Applicant's Legal Analysis

1. Section 8(f) of the Act provides that whenever the Commission, upon application or its own motion, finds that a registered investment company has ceased to be an investment company, the Commission shall so declare by order and upon the taking effect of such order, the registration of such company shall cease to be in effect.

2. Section 3(a)(1)(A) of the Act defines an ''investment company'' as any issuer that ''is or holds itself out as being engaged primarily, or proposes to engage primarily, in the business of investing, reinvesting, or trading in securities.'' Section 3(a)(1)(C) of the Act defines an ''investment company'' as any issuer that ''is engaged or proposes to engage in the business of investing, reinvesting, owning, holding, or trading in securities, and owns or proposes to acquire investment securities having a value exceeding 40 per centum of the value of such issuer's total assets (exclusive of Government securities and cash items) on an unconsolidated basis.''[6]

3. Section 3(b)(1) of the Act provides that ''[n]otwithstanding paragraph (1)(C) of subsection (a), none of the following persons is an investment company within the meaning of this title: (1) Any issuer primarily engaged, directly or through a wholly owned subsidiary or subsidiaries, in a business or businesses other than that of investing, reinvesting, owning, holding, or trading in securities.'' Rule 3a–1 under the Act states that ''[n]otwithstanding section 3(a)(1)(C) of the Act, an issuer will be deemed not to be an investment company under the Act, provided, that: (a) No more than 45 percent of the value (as defined in section 2(a)(41) of the Act) of such issuer's total assets (exclusive of Government securities and cash items) consists of, and no more than 45 percent of such issuer's net income after taxes (for the last four fiscal quarters combined) is derived from, securities other than: (1) Government securities; (2) securities issued by employees' securities companies; (3) securities issued by majority-owned subsidiaries of the issuer (other than subsidiaries relying on the exclusion from the definition of investment company in section 3(b)(3) or (c)(1) of the Act) which are not investment companies; and (4) securities issued by companies: (i) Which are controlled primarily by such issuer; (ii) through which such issuer engages in a business other than that of investing, reinvesting, owning, holding or trading in securities; and (iii) which are not investment companies; (b) the issuer is not an investment company as defined in section 3(a)(1)(A) or 3(a)(1)(B) of the Act and is not a special situation investment company; and (c) the percentages described in paragraph (a) of this section are determined on an unconsolidated basis, except that the issuer shall consolidate its financial statements with the financial statements of any wholly-owned subsidiaries.''

4. Applicant states that it is no longer an investment company as defined in section 3(a)(1)(A) or section 3(a)(1)(C). Applicant states that its business is: (a) To enter into a new business; or, (b) to merge with, or otherwise acquire, an active business which would benefit from operating as a public entity. Applicant states that its historical development, its public representations, the activities of its director and officer, its lack of assets and income support this assertion. Applicant states that it is thus qualified for an order of the Commission pursuant to section 8(f) of the Act.

For the Commission, by the Division of Investment Management, under delegated authority.

J. Matthew DeLesDernier,

Assistant Secretary.

[FR Doc. 2020–04797 Filed 3–9–20; 8:45 am]

BILLING CODE 8011–01–P

[2] As of the Final Order, Roran owned 51,000 shares of applicant's common stock, representing 2.7% of the issued and outstanding shares of common stock of applicant at that time.

[3] Because of the liability exposure inherent in serving on the board of a public company, applicant's lack of financial resources, and applicant's loss of its SBIC license, applicant states that Roran was unable to locate any qualified individuals to serve on the board of directors. Zindel Zelmanovitch agreed to serve as director. Zindel Zelmanovitch is the father of Yitzhak Zelmanovitch, the managing member of Roran. Applicant states that Zindel Zelmanovitch has not been compensated for any of his services as a director or officer of applicant.

[4] The Note bears interest at 12% per annum and has a maturity date of June 19, 2020. Roran has the right to convert all or any portion of the Note into shares of applicant's common stock at a conversion price equal to 60% of the share price. Roran was not compensated, and will not be compensated, for its efforts during and after the Receivership. It will, however, be reimbursed for all ordinary and necessary expenses incurred on behalf of applicant, and it will be repaid all amounts it loans to applicant.

[5] Applicant states that for the fiscal year ended June 30, 2019 and all times after the most recent fiscal year, it had no assets, other than cash on hand which the applicant used to pay incurred expenses.

[6] Section 3(a)(2) of the Act defines ''investment securities'' as ''all securities except (A) Government securities, (B) securities issued by employees' securities companies, and (C) securities issued by majority-owned subsidiaries of the owner which (i) are not investment companies, and (ii) are not relying on the exception from the definition of investment company in paragraph (1) or (7) of subsection (c).''

SECURITIES AND EXCHANGE COMMISSION

Proposed Collection; Comment Request

Upon Written Request, Copies Available From: Securities and Exchange Commission, Office of FOIA Services,100 F Street NE, Washington, DC 20549–2736.

Extension:
Rule 203A–2(e), SEC File No. 270–501, OMB Control No. 3235–0559

Notice is hereby given that, pursuant to the Paperwork Reduction Act of 1995 (44 U.S.C. 3501 *et seq.*) (''PRA''), the Securities and Exchange Commission (''Commission'') is soliciting comments on the collections of information summarized below. The Commission plans to submit this existing collection of information to the Office of Management and Budget for extension and approval.

Rule 203A–2(e),[1] which is entitled ''internet Investment Advisers,'' exempts from the prohibition on Commission registration an internet investment adviser who provides investment advice to all of its clients exclusively through computer software-based models or applications, termed under the rule as ''interactive websites.'' [2] These advisers generally would not meet the statutory thresholds currently set out in section 203A of the Advisers Act [3]—they do not manage $25 million or more in assets and do not advise registered investment companies, or they manage between $25 million and $100 million in assets, do not advise registered investment companies or business development companies, and are required to be registered as investment advisers with the states in which they maintain their principal offices and places of business and are subject to examination as an adviser by such states.[4] Eligibility under rule 203A–2(e) is conditioned on an adviser maintaining in an easily accessible place, for a period of not less than five years from the filing of Form ADV,[5] a record demonstrating that the adviser's advisory business has been conducted through an interactive website in accordance with the rule.[6]

This record maintenance requirement is a ''collection of information'' for PRA purposes. The Commission believes that approximately 181 advisers are registered with the Commission under rule 203A–2(e), which involves a recordkeeping requirement of approximately four burden hours per year per adviser and results in an estimated 724 of total burden hours (4 × 181) for all advisers.

This collection of information is mandatory, as it is used by Commission staff in its examination and oversight program in order to determine continued Commission registration eligibility for advisers registered under this rule. Responses generally are kept confidential pursuant to section 210(b) of the Advisers Act.[7] Written comments are invited on: (a) Whether the collection of information is necessary for the proper performance of the functions of the Commission, including whether the information has practical utility; (b) The accuracy of the Commission's estimate of the burden of the collection of information; (c) Ways to enhance the quality, utility, and clarity of the information collected; and (d) Ways to minimize the burden of the collection of information on respondents, including through the use of automated collection techniques or other forms of information technology. Consideration will be given to comments and suggestions submitted in writing within 60 days of this publication. An agency may not conduct or sponsor a collection of information unless it displays a currently valid OMB control number. No person shall be subject to any penalty for failing to comply with a collection of information subject to the PRA that does not display a valid OMB control number.

Please direct your written comments to David Bottom, Director/Chief Information Officer, Securities and Exchange Commission, C/O Cynthia Roscoe, 100 F Street NE, Washington, DC 20549; or send an email to: *PRA_Mailbox@sec.gov.*

Dated: March 5, 2020.

J. Matthew DeLesDernier,

Assistant Secretary.

[FR Doc. 2020–04875 Filed 3–9–20; 8:45 am]

BILLING CODE 8011–01–P

[1] 17 CFR 275.203A–2(e).

[2] Included in rule 203A–2(e) is a limited exception to the interactive website requirement which allows these advisers to provide investment advice to fewer than 15 clients through other means on an annual basis. 17 CFR 275.203A–2(e)(1)(i). The rule also precludes advisers in a control relationship with an SEC-registered internet adviser from registering with the Commission under the common control exemption provided by rule 203A–2(b) (17 CFR 275.203A–2(b)). 17 CFR 275.203A–2(e)(1)(iii).

[3] 15 U.S.C. 80b–3a(a).

[4] *Id.*

[5] The five-year record retention period is a similar recordkeeping retention period as imposed on all advisers under rule 204–2 of the Advisers Act. See rule 204–2 (17 CFR 275.204–2).

[6] 17 CFR 275.203A–2(e)(1)(ii).

[7] 15 U.S.C. 80b–10(a).

SOCIAL SECURITY ADMINISTRATION

[Docket No. SSA–2020–0011]

Agency Information Collection Activities: Comment Request

The Social Security Administration (SSA) publishes a list of information collection packages requiring clearance by the Office of Management and Budget (OMB) in compliance with Public Law 104–13, the Paperwork Reduction Act of 1995, effective October 1, 1995. This notice includes one new collection.

SSA is soliciting comments on the accuracy of the agency's burden estimate; the need for the information; its practical utility; ways to enhance its quality, utility, and clarity; and ways to minimize burden on respondents, including the use of automated collection techniques or other forms of information technology. Mail, email, or fax your comments and recommendations on the information collection(s) to the OMB Desk Officer and SSA Reports Clearance Officer at the following addresses or fax numbers.

(OMB), Office of Management and Budget, Attn: Desk Officer for SSA, Fax: 202–395–6974, Email address: *OIRA_Submission@omb.eop.gov*

(SSA), Social Security Administration, OLCA, Attn: Reports Clearance Director, 3100 West High Rise, 6401 Security Blvd., Baltimore, MD 21235, Fax: 410–966–2830, Email address: *OR.Reports.Clearance@ssa.gov*

Or you may submit your comments online through *www.regulations.gov,* referencing Docket ID Number [SSA–2020–0011].

SSA submitted the information collection below to OMB for clearance. Your comments regarding this information collection would be most useful if OMB and SSA receive them 30 days from the date of this publication. To be sure we consider your comments, we must receive them no later than April 9, 2020. Individuals can obtain copies of the OMB clearance package by writing to *OR.Reports.Clearance@ssa.gov.*

Electronic Consent Based Social Security Number Verification—20 CFR 400.100—0960–NEW. The electronic Consent Based Social Security Number Verification (eCBSV) is a fee-based Social Security Number (SSN) verification service that will allow permitted entities (a financial institution or service provider, subsidiary, affiliate, agent, subcontractor, or assignee of a financial institution as defined by Section 509 of the Gramm-Leach-Bliley Act, 42

U.S.C.A. 405b(b)(4), Pub. L. 115–174, Title II, 215(b)(4)) to verify an individual's SSN based on the SSN holder's signed consent in connection with a credit transaction or any circumstance described in section 604 of the Fair Credit Reporting Act (15 U.S.C. 1681b).

Background

We are creating this system due to section 215 of the Economic Growth, Regulatory Relief, and Consumer Protection Act of 2018 (Banking Bill), Public Law 115–174. Permitted entities will be able to submit an SSN, name, and date of birth (DOB) to SSA for verification via an application programming interface. The purpose of the information collection is for SSA to verify for the permitted entity that the submitted name, DOB, and SSN matches, or does not match, the data contained in our records. After completing the enrollment process, paying for services, and obtaining SSN holder consent, the permitted entity submits the names, DOBs, and SSNs of number holders who gave valid consents to the eCBSV service. SSA matches the information against our Master File, using SSN, name, and DOB. The eCBSV Service will respond in real time with a match/no match indicator (and an indicator if our records show that the SSN Holder died). SSA does not provide specific information on what data elements did not match, nor does SSA provide any SSNs or other identifying information. In addition, the verification does not authenticate the identity of individuals or conclusively prove the individuals we verify are who they claim to be.

Consent Requirements

Under eCBSV, the permitted entity does not submit the number holder's consent documents to SSA. SSA requires each permitted entity to retain a valid consent for each SSN verification request for a period of five years from the date of receipt of the consent form. The Banking Bill permits a Financial Institution's service provider, subsidiary, affiliate, agent, subcontractor, or assignee to seek verification of the SSN Holder's SSN on behalf of a financial institution pursuant to the terms of the SSN Holder's consent. In this case, the permitted entity shall ensure that the Financial Institution use the verification only for the purposes stated in the consent, and make no further use or disclosure of the verified SSN. The relationship will be subject to the contractual obligations as specified in the User Agreement with which the permitted entity must concur.

Compliance Review

SSA requires each permitted entity to undergo compliance reviews to ensure the permitted entities obtained valid consent from number holders. An SSA approved certified public accountant (CPA) firm will conduct the compliance reviews. The reviews will ensure the permitted entities meet all terms and conditions of the User Agreement. The eCBSV fee will include all compliance review costs. In general, all eCBSV users will be subject to an audit within the first three years after they begin using the system, with subsequent additional reviews to be conducted periodically afterward. The CPA follows review standards established by the American Institute of Certified Public Accountants and contained in the Generally Accepted Government Audit Standards (GAGAS). At any time, SSA may conduct onsite inspections of the requester's site, including a systems review, to ensure they adhered to the applicable requirements associated with collection and maintenance of consent forms, and to assess systems security overall.

The respondents to the eCBSV collection are the permitted entities; members of the public who consent to the SSN verification; and CPAs who provide compliance review services.

Type of Request: Request for a new information collection.

Note: Anyone who wishes to see revised versions of the draft ICR collection instruments, an explanation of the changes SSA made to these draft instruments, and all other ICR documents (including the Supporting Statement and summary of public comments) may do so at *https://www.ssa.gov/dataexchange/eCBSV/index.html* beginning from the morning of publication of this notice.

Time Burden

Requirement	Number of respondents	Frequency of response	Average burden per response (minutes)	Estimated total annual burden (hours)	Average theoretical hourly cost amount (dollars) *	Total annual Opportunity cost (dollars) **
(a) Complete eCBSV enrollment process ***	10	1	120	20	* $36.98	** $740
(a) Configure customer system for ability to send in verification requests	10	1	2,400	400	* 36.98	** 14,792
(a) People whose SSNs SSA will verify—Reading and Signing	307,000,000	1	3	15,350,000	* 10.22	** 156,877,000
(a) Sending in the verification request, calling our system, getting a response	307,000,000	1	1	5,116,667	* 36.98	** 189,214,346
(b) Follow SSA requirements to configure application program interface	10	1	4,800	800	* 36.98	** 29,584
(c) CPA Compliance Review and Report ****	10	1	4,800	800	* 33.89	** 27,112
Totals	614,000,040			20,468,687		** 346,163,574

* We based these figures on average Business and Financial operations occupations and Certified Public Accountants' hourly salaries, as reported by Bureau of Labor Statistics data, and per average Disability Insurance (DI) payments, as reported in SSA's DI payment data.

** This figure does not represent actual costs that SSA is imposing on recipients of Social Security payments to complete this application; rather, these are theoretical opportunity costs for the additional time respondents will spend to complete the application. *There is no actual charge to respondents to complete the application.*

*** The enrollment process entails reviewing and completing eCBSV User Agreement and financial requirements package; visiting the Department of the Treasury's *Pay.gov* to make payment for services; and submitting a permitted entity certification via email.

**** There will be one CPA firm respondent (an SSA-approved contractor) to conduct compliance reviews and prepare written reports of findings on the 10 permitted entities.

Cost Burden

The public cost burden is dependent upon the number of permitted entities and annual transaction volume. In FY 2019, 10 companies enrolled out of 123 applications received to participate in eCBSV. We based the cost estimates below on 10 participating permitted entities in FY 2020 submitting an anticipated volume of 307,000,000 transactions. The Banking Bill requires that we collect at least 50 percent of the start-up costs (*i.e.,* that we collect $9.2 million) before we may begin development of the eCBSV verification system. SSA will recover the remaining development costs over three years using the following tier fee schedule:

eCBSV TIER FEE SCHEDULE

Tier	Volume threshold	Annual fee
(*1*	1–1,000	$400
(*2*	1,001–10,000	3,030
(*3*	10,001–200,000	14,300
(*4*	200,001–50 million	276,500
(*5*	50,000,001–2 billion	860,000

Each enrolled permitted entity will be required to remit the above tier based subscription fee for the 365-day agreement period and the appropriate administrative fee. We will charge newly enrolled entities a startup administrative fee of $3,693. After the initial year, we will charge the entities a renewal administrative fee of $1,691 each time the agreement is renewed or amended. We calculated the fees based on forecasted systems and operational expenses; agency oversight, overhead and CPA audit contract costs.

In addition, SSA will periodically recalculate costs to provide eCBSV services and adjust the fees charged as needed. We will notify companies of a fee adjustment at the renewal of the eCBSV User Agreement and via notice in the **Federal Register**; companies have the opportunity to cancel the agreement or continue service using the new fee.

Dated: March 5, 2020.

Faye I. Lipsky,

Director, Office of Regulations and Reports, Clearance, Social Security Administration.

[FR Doc. 2020–04807 Filed 3–9–20; 8:45 am]

BILLING CODE 4191–02–P

DEPARTMENT OF STATE

[Public Notice 11067]

Designation of Ahmad al-Hamidawi as a Specially Designated Global Terrorist

Acting under the authority of and in accordance with sections 1(a)(ii)(B) of Executive Order 13224 of September 23, 2001, as amended by Executive Order 13268 of July 2, 2002, Executive Order 13284 of January 23, 2003, and Executive Order 13886 of September 9, 2019, I hereby determine that the person known as Ahmad al-Hamidawi, also known as Ahmad Muhsin Faraj al-Hamidawi, also known as Ahmed Kadhim Raheem Al-Saedi, also known as Ahmad Kazim Rahim Al-Sa'idi, also known as Abu Husayn, is a leader of Kata'ib Hizballah, a group whose property and interests in property are blocked pursuant to a determination by the Secretary of State pursuant to Executive Order 13224.

Consistent with the determination in section 10 of Executive Order 13224 that prior notice to persons determined to be subject to the Order who might have a constitutional presence in the United States would render ineffectual the blocking and other measures authorized in the Order because of the ability to transfer funds instantaneously, I determine that no prior notice needs to be provided to any person subject to this determination who might have a constitutional presence in the United States, because to do so would render ineffectual the measures authorized in the Order.

This notice shall be published in the **Federal Register**.

Dated: February 14, 2020.

Michael R. Pompeo,

Secretary of State.

[FR Doc. 2020–04864 Filed 3–9–20; 8:45 am]

BILLING CODE 4710–AD–P

DEPARTMENT OF STATE

[Public Notice 11066]

30-Day Notice of Proposed Information Collection: State Assistance Management System Domestic Results Performance Monitoring Module for the Bureau of Educational and Cultural Affairs (ECA)

ACTION: Notice of request for public comment and submission to OMB of proposed collection of information.

SUMMARY: The Department of State has submitted the information collection described below to the Office of Management and Budget (OMB) for approval. In accordance with the Paperwork Reduction Act of 1995 we are requesting comments on this collection from all interested individuals and organizations. The purpose of this Notice is to allow 30 days for public comment.

DATES: Submit comments directly to the Office of Management and Budget (OMB) up to April 9, 2020.

ADDRESSES: Direct comments to the Department of State Desk Officer in the Office of Information and Regulatory Affairs at the Office of Management and Budget (OMB). You may submit comments by the following methods:

- *Email: oira_submission@omb.eop.gov.* You must include the DS form number, information collection title, and the OMB control number in the subject line of your message.
- *Fax:* 202–395–5806. Attention: Desk Officer for Department of State.

FOR FURTHER INFORMATION CONTACT: Direct requests for additional information regarding the collection listed in this notice, including requests for copies of the proposed collection instrument and supporting documents,

may be sent to Natalie Donahue, Chief of Evaluation, Bureau of Educational and Cultural Affairs, who may be reached at (202) 632–6193 or *DonahueNR@state.gov.*

SUPPLEMENTARY INFORMATION:

- *Title of Information Collection:* SAMS-Domestic Results Performance Module (SAMS-D RPM).
- *OMB Control Number:* None.
- *Type of Request:* New collection.
- *Originating Office:* Educational and Cultural Affairs (ECA/P/V).
- *Form Number:* No form.
- *Respondents:* Implementing partners of ECA grants and cooperative agreements.
- *Estimated Number of Respondents:* 100.
- *Estimated Number of Responses:* 250 per year (most respondents report on a semi-annual basis; though there are some that will report more frequently, which has been factored into this figure).
- *Average Time per response:* 20 hours (regardless of frequency of reporting).
- *Total Estimated Burden Time:* 5,000 hours per year.
- *Obligation to Respond:* Voluntary.

The State Assistance Management System Domestic (SAMS-D) database is the official system of record for grants reporting, this notice of proposed information collection pertains only to the SAMS-D RPM, which is an extension *module* within the larger SAMS-D database. The use of that module is voluntary.

We are soliciting public comments to permit the Department to:

- Evaluate whether the proposed information collection is necessary for the proper functions of the Department.
- Evaluate the accuracy of our estimate of the time and cost burden for this proposed collection, including the validity of the methodology and assumptions used.
- Enhance the quality, utility, and clarity of the information to be collected.
- Minimize the reporting burden on those who are to respond, including the use of automated collection techniques or other forms of information technology.

Please note that comments submitted in response to this Notice are public record. Before including any detailed personal information, you should be aware that your comments as submitted, including your personal information, will be available for public review.

Abstract of Proposed Collection

As a normal course of business and in compliance with OMB Guidelines contained in Circular A–110, recipient organizations are required to provide, and the U.S. State Department required to collect, periodic program and financial performance reports. The responsibility of the State Department to track and monitor the programmatic and financial performance necessitates a database that can help facilitate this in a consistent and standardized manner. The larger SAMS-D database is already the Department of State's system of record; the database enables monitoring of grants and cooperative agreements through standardized collection and storage of performance monitoring award elements, such as progress reports, workplans, grant agreements, and other business information related to ECA awards. The SAMS-D RPM (which this notice of information collection pertains to, specifically) is an extension *module* within the larger SAMS-D platform, designed to collect performance monitoring data in a format that will make analysis of program performance and monitoring of the award more efficient.

Methodology

Information will be entered into SAMS-D RPM electronically. For organizations that are unable to submit their reports online, they will be able to submit a word document or PDF as the report, which will then be uploaded to the SAMS-D RPM. ECA will seek to limit such situations.

Kristin Roberts,

Acting Deputy Assistant Secretary, Bureau of Educational and Cultural Affairs.

[FR Doc. 2020–04843 Filed 3–9–20; 8:45 am]

BILLING CODE 4710–05–P

OFFICE OF THE UNITED STATES TRADE REPRESENTATIVE

Notice of Product Exclusions: China's Acts, Policies, and Practices Related to Technology Transfer, Intellectual Property, and Innovation

AGENCY: Office of the United States Trade Representative.

ACTION: Notice of product exclusions.

SUMMARY: On August 20, 2019, at the direction of the President, the U.S. Trade Representative determined to modify the action being taken in the investigation by imposing additional duties of 10 percent *ad valorem* on goods of China with an annual trade value of approximately $300 billion as part of the action in the Section 301 investigation of China's acts, policies, and practices related to technology transfer, intellectual property, and innovation. The additional duties on products in List 1, which is set out in Annex A of that action, became effective on September 1, 2019. On August 30, 2019, at the direction of the President, the U.S. Trade Representative determined to increase the rate of the additional duty applicable to the tariff subheadings covered by the action announced in the August 20 notice from 10 percent to 15 percent. On January 22, 2020, the U.S. Trade Representative determined to reduce the rate from 15 percent to 7.5 percent. The U.S. Trade Representative initiated a product exclusion process in October 2019, and interested persons have submitted requests for the exclusion of specific products. This notice announces the U.S. Trade Representative's determination to grant certain exclusion requests, as specified in the Annex to this notice. The U.S. Trade Representative will continue to issue decisions on pending requests on a periodic basis.

DATES: The product exclusions announced in this notice will apply as of September 1, 2019, the effective date of the $300 billion action, and will extend to September 1, 2020.

FOR FURTHER INFORMATION CONTACT: For general questions about this notice, contact Assistant General Counsels Philip Butler or Megan Grimball, or Director of Industrial Goods Justin Hoffmann at (202) 395–5725. For specific questions on customs classification or implementation of the product exclusions identified in the Annex to this notice, contact *traderemedy@cbp.dhs.gov.*

SUPPLEMENTARY INFORMATION:

A. Background

For background on the proceedings in this investigation, please see the prior notices issued in the investigation, including 82 FR 40213 (August 24, 2017), 83 FR 14906 (April 6, 2018), 83 FR 28710 (June 20, 2018), 83 FR 33608 (July 17, 2018), 83 FR 38760 (August 7, 2018), 83 FR 40823 (August 16, 2018), 83 FR 47974 (September 21, 2018), 83 FR 49153 (September 28, 2018), 84 FR 20459 (May 9, 2019), 84 FR 43304 (August 20, 2019), 84 FR 45821 (August 30, 2019), 84 FR 57144 (October 24, 2019), 84 FR 69447 (December 18, 2019), and 85 FR 3741 (January 22, 2020).

In a notice published August 20, 2019, the U.S. Trade Representative, at the direction of the President, announced a determination to modify the action being taken in the Section 301 investigation by imposing an additional 10 percent *ad valorem* duty

on products of China with an annual aggregate trade value of approximately $300 billion. 84 FR 43304 (August 20, 2019) (the August 20 notice). The August 20 notice contains two separate lists of tariff subheadings, with two different effective dates. List 1, which is set out in Annex A of the August 20 notice, was effective September 1, 2019. List 2, which is set out in Annex C of the August 20 notice, was scheduled to take effect on December 15, 2019.

On August 30, 2019, the U.S. Trade Representative, at the direction of the President, determined to modify the action being taken in the investigation by increasing the rate of additional duty from 10 to 15 percent *ad valorem* on the goods of China specified in Annex A and Annex C of the August 20 notice. *See* 84 FR 45821. On October 24, 2019, the U.S. Trade Representative established a process by which U.S. stakeholders could request exclusion of particular products classified within an 8-digit Harmonized Tariff Schedule of the United States (HTSUS) subheading covered by List 1 of the $300 billion action from the additional duties. *See* 84 FR 57144 (the October 24 notice). Subsequently, the U.S. Trade Representative announced a determination to suspend until further notice the additional duties on products set out in Annex C of the August 20 notice. *See* 84 FR 69447 (December 18, 2019). The U.S. Trade Representative later determined to further modify the action being taken by reducing the additional duties for the products covered in Annex A of the August 20 notice from 15 percent to 7.5 percent. *See* 85 FR 3741 (January 22, 2020).

Under the October 24 notice, requests for exclusion had to identify the product subject to the request in terms of the physical characteristics that distinguish the product from other products within the relevant 8-digit subheading covered by the $300 billion action. Requestors also had to provide the 10-digit subheading of the HTSUS most applicable to the particular product requested for exclusion, and could submit information on the ability of U.S. Customs and Border Protection to administer the requested exclusion. Requestors were asked to provide the quantity and value of the Chinese-origin product that the requestor purchased in the last three years, among other information. With regard to the rationale for the requested exclusion, requests had to address the following factors:

- Whether the particular product is available only from China and specifically whether the particular product and/or a comparable product is available from sources in the United States and/or third countries.
- Whether the imposition of additional duties on the particular product would cause severe economic harm to the requestor or other U.S. interests.
- Whether the particular product is strategically important or related to ''Made in China 2025'' or other Chinese industrial programs.

The October 24 notice stated that the U.S. Trade Representative would take into account whether an exclusion would undermine the objective of the Section 301 investigation.

The October 24 notice required submission of requests for exclusion from List 1 of the $300 billion action no later than January 31, 2020, and noted that the U.S. Trade Representative periodically would announce decisions. This notice contains the first set of exclusion from List 1 of the $300 billion action. The Office of the United States Trade Representative regularly updates the status of each pending request on the USTR Exclusions Portal at *https://exclusions.ustr.gov/s/docket?docketNumber=USTR-2019-0017.*

B. Determination To Grant Certain Exclusions

Based on the evaluation of the factors set out in the October 24 notice, which are summarized above, pursuant to sections 301(b), 301(c), and 307(a) of the Trade Act of 1974, as amended, and in accordance with the advice of the interagency Section 301 Committee, the U.S. Trade Representative has determined to grant the product exclusions set out in the Annex to this notice. The U.S. Trade Representative's determination also takes into account advice from advisory committees and any public comments on the pertinent exclusion requests.

As set out in the Annex, the exclusions are reflected in 8 10-digit HTSUS subheadings, which cover 59 separate exclusion requests.

In accordance with the October 24 notice, the exclusions are available for any product that meets the description in the Annex, regardless of whether the importer filed an exclusion request. Further, the scope of each exclusion is governed by the scope of the 10-digit HTSUS subheading as described in the Annex, and not by the product descriptions set out in any particular request for exclusion.

As stated in the October 24 notice, the exclusions will apply from September 1, 2019, the effective date of the $300 billion action, and will extend for one year to September 1, 2020. U.S. Customs and Border Protection will issue instructions on entry guidance and implementation.

The U.S. Trade Representative will continue to issue determinations on pending requests on a periodic basis.

Joseph Barloon,

General Counsel, Office of the U.S. Trade Representative.

BILLING CODE 3290–F0–P

ANNEX

A. Effective with respect to goods entered for consumption, or withdrawn from warehouse for consumption, on or after 12:01 a.m. eastern daylight time on September 1, 2019, subchapter III of chapter 99 of the Harmonized Tariff Schedule of the United States (HTSUS) is modified:

1. by inserting the following new heading 9903.88.39 in numerical sequence, with the material in the new heading inserted in the columns of the HTSUS labeled "Heading/Subheading", "Article Description", and "Rates of Duty 1-General", respectively:

Heading/ Subheading	Article Description	Rates of Duty		
		1		2
		General	Special	
"9903.88.39	Articles the product of China, as provided for in U.S. note 20(rr) to this subchapter, each covered by an exclusion granted by the U.S. Trade Representative	The duty provided in the applicable subheading"		

2. by inserting the following new U.S. note 20(rr) to subchapter III of chapter 99 in numerical sequence:

"(rr) The U.S. Trade Representative determined to establish a process by which particular products classified in heading 9903.88.15 and provided for in U.S. notes 20(r) and (s) to this subchapter could be excluded from the additional duties imposed by heading 9903.88.15. See 84 Fed. Reg. 43304 (August 20, 2019), 84 Fed. Reg. 45821 (August 30, 2019), 84 Fed. Reg. 57144 (October 24, 2019) and 85 Fed. Reg. 3741 (January 22, 2020). Pursuant to the product exclusion process, the U.S. Trade Representative has determined that the additional duties provided for in heading 9903.88.15 shall not apply to the following particular products, which are provided for in the following enumerated statistical reporting numbers:

1) 3401.19.0000
2) 3926.90.9910
3) 4015.19.0510
4) 4015.19.0550
5) 4818.90.0000
6) 6210.10.5000
7) 6307.90.6090
8) 6307.90.6800"

3. by amending the last sentence of the first paragraph of U.S. note 20(r) to insert ", except as provided in heading 9903.88.39 and U.S. note 20(rr) to subchapter III of chapter 99" after "heading 9903.88.15".
4. by amending the article description of heading 9903.88.15 by deleting the word "Articles" and inserting "Except as provided in heading 9903.88.39, articles" in lieu thereof.

[FR Doc. 2020–05000 Filed 3–6–20; 4:15 pm]
BILLING CODE 3290–F0–C

OFFICE OF THE UNITED STATES TRADE REPRESENTATIVE

[Docket Number USTR–2020–0010]

Field Hearings Regarding Trade Distorting Policies That May Be Affecting Seasonal and Perishable Products in U.S. Commerce

AGENCY: Office of the United States Trade Representative.

ACTION: Notice of public hearing and request for comments.

SUMMARY: The Office of the United States Trade Representative (USTR) and the Departments of Commerce and Agriculture will convene public hearings in Florida and Georgia to hear firsthand from interested persons on trade distorting policies that may be causing harm to U.S. seasonal and perishable producers (namely, of fresh fruits and vegetables) and contributing to unfair pricing in the U.S. market, and to solicit feedback on how the Administration can better support these producers and redress any unfair harm.

DATES:

Field Hearing Dates and Locations

April 7, 2020 at 9:00 a.m. EST: Grimes Family Agricultural Center, 2508 W Oak Avenue, Plant City, Florida 33563.

April 9, 2020 at 9:00 a.m. EST: Rainwater Conference Center, 1 Meeting Place, Valdosta, Georgia 31601.

Submission Deadlines

March 19, 2020 at 11:59 p.m. EST: Deadline for submission of requests to appear at either of the field hearings.

March 26, 2020 at 11:59 p.m. EST: Deadline for submission of hearing statements and written comments.

ADDRESSES: USTR strongly prefers electronic submissions made through the Federal eRulemaking portal: *http://www.regulations.gov* (*Regulations.gov*). Follow the instructions for submission in section II below. The docket number is USTR–2020–0010. For alternatives to online submissions, please contact Trey Forsyth in advance of the submission deadline at (202) 395–8583.

FOR FURTHER INFORMATION CONTACT: For procedural questions, questions regarding the field hearings, or to request special accommodations, please contact Trey Forsyth at (202) 395–8583.

SUPPLEMENTARY INFORMATION:

I. Background

USTR and the Departments of Commerce and Agriculture will convene public hearings in Florida and Georgia to hear firsthand from interested persons regarding trade distorting policies that may be affecting seasonal and perishable products in U.S. commerce. The hearings are open to the public, but space may be limited. Accordingly, attendees will be accommodated on a first come, first served basis.

USTR invites comments and supporting documentation from interested persons on the following issues:

- Trade distorting policies that may be contributing to unfair pricing in the U.S. market and causing harm to U.S. seasonal and perishable producers in U.S. commerce.
- How the Administration can better support these producers and redress unfair harm.

II. Hearing Participation—Submission Requirements

To appear and provide testimony at either of the field hearings, you must submit a request to do so by the March 19, 2020, 11:59 p.m. EST deadline.

All parties who wish to testify also must submit the statement they intend to present at the hearing by the March 26, 2020, 11:59 p.m. EST deadline. Remarks at the hearing will be limited to five minutes, and might be further limited if circumstances warrant, to allow adequate time for questions from the panel.

Interested parties who do not want to appear at the hearing may submit comments by the March 26 deadline.

To submit a request to appear and provide testimony, go to *www.regulations.gov*. To make a submission via *Regulations.gov*, enter docket number USTR–2020–0010 in the 'search for' field on the home page and click 'search.' The site will provide a search-results page listing all documents associated with this docket. Find a reference to this notice by selecting 'notice' under 'document type' in the 'filter results by' section on the left side of the screen and click on the link entitled 'comment now.' In the ''comment'' field on the next page, identify the hearing at which you would like to testify and provide the full name, address, email address, and telephone number of the person who wishes to present the testimony.

To submit a written statement, the *Regulations.gov* website allows users to provide comments by filling in a 'type comment' field or by attaching a document using the 'upload file(s)' field. USTR prefers that you provide submissions in an attached document. The file name should include the name of the person who will be presenting the testimony, or if not testifying, the name of the person submitting the statement. The name of the presenter also should be clear in the content of the file itself. All submissions must be in English and be prepared in (or be compatible with) Microsoft Word (.doc) or Adobe Acrobat (.pdf) formats. Include any data attachments to the submission in the same file as the submission itself, and not as separate files.

For additional information on using the *Regulations.gov* website, please consult the resources provided on the website by clicking on 'how to use this site' on the left side of the home page.

You must clearly designate business confidential information (BCI) by marking the submission 'BUSINESS CONFIDENTIAL' at the top and bottom of the cover page and each succeeding page, and indicating, via brackets, the specific information that is confidential.

A submitter requesting that USTR treat information in a submission as BCI must certify that the information is business confidential and would not customarily be released to the public by the submitter.

You must include 'business confidential' in the 'type comment' field, and must add 'business confidential' to the end of your file name for any attachments.

For any submission containing BCI, you also must attach a separate non-confidential version (*i.e.,* not as part of the same submission with the BCI version), indicating where confidential information has been redacted. USTR will place the non-confidential version in the docket and it will be available for public inspection.

USTR may not accept BCI submissions that do not have the required markings, or are not accompanied by a properly marked non-confidential version, and may consider the submission to be a public document.

Submissions responding to this notice, except for information granted BCI status, will be available for public viewing at *Regulations.gov* upon completion of processing. You can view submissions by entering docket number USTR–2020–0010 in the search field at *Regulations.gov*.

Joseph Barloon,

General Counsel, Office of the U.S. Trade Representative.

[FR Doc. 2020–04827 Filed 3–9–20; 8:45 am]
BILLING CODE 3290–F0–P

DEPARTMENT OF TRANSPORTATION

National Highway Traffic Safety Administration

[Docket No. NHTSA–2019–0007; Notice 2]

Pirelli Tire, LLC, Grant of Petition for Decision of Inconsequential Noncompliance

AGENCY: National Highway Traffic Safety Administration (NHTSA), Department of Transportation (DOT).

ACTION: Grant of petition.

SUMMARY: Pirelli Tire, LLC (Pirelli), has determined that certain Pirelli P Zero replacement tires do not comply with Federal Motor Vehicle Safety Standard (FMVSS) No. 139, *New Pneumatic Radial Tires for Light Vehicles.* Pirelli filed a noncompliance report dated November 19, 2018, and subsequently petitioned NHTSA on December 14, 2018, for a decision that the subject noncompliance is inconsequential as it relates to motor vehicle safety. This notice announces the grant of Pirelli's petition.

FOR FURTHER INFORMATION CONTACT: Abraham Diaz, Office of Vehicle Safety Compliance, the National Highway Traffic Safety Administration (NHTSA), telephone (202) 366–5310, facsimile (202) 366–5930.

SUPPLEMENTARY INFORMATION:

I. Overview

Pirelli has determined that certain Pirelli P Zero replacement tires do not fully comply with paragraphs S5.5(e) and (f) of FMVSS No. 139, *New Pneumatic Radial Tires for Light Vehicles* (49 CFR 571.139). Pirelli filed a noncompliance report dated November 19, 2018, pursuant to 49 CFR part 573, *Defect and Noncompliance Responsibility and Reports,* and subsequently petitioned NHTSA on December 14, 2018, for an exemption from the notification and remedy requirement of 49 U.S.C. Chapter 301 on the basis that this noncompliance is inconsequential as it relates to motor vehicle safety, pursuant to 49 U.S.C. 30118(d) and 30120(h) and 49 CFR part 556, *Exemption for Inconsequential Defect or Noncompliance.*

Notice of receipt of Pirelli's petition was published, with a 30-day public comment period on August 28, 2019, in the **Federal Register** (84 FR 45208). No comments were received. To view the petition and all supporting documents log onto the Federal Docket Management System (FDMS) website at *https://www.regulations.gov/.* Then follow the online search instructions to locate docket number ''NHTSA–2019–0007.''

II. Equipment Involved

Approximately 28 Pirelli P Zero replacement tires, size 265/45R21 104W, manufactured between July 10, 2018, and August 08, 2018, are potentially involved.

III. Noncompliance

Pirelli explains that the noncompliance is due to a mold error and that as a result, the number of tread plies indicated on the sidewall of the subject tires does not match the actual number of plies in the tire construction as required by paragraphs S5.5(e) and (f) of FMVSS No. 139. Specifically, the tires were marked ''Tread: 2 Polyester 2 Steel 1 Polyamide; Sidewall: 1 Polyamide'' when they should have been marked ''Tread: 2 Polyester 2 Steel 1 Polyamide; Sidewall: 2 Polyester.''

IV. Rule Requirements

Paragraphs S5.5(e) and (f) of FMVSS No. 139 provide the requirements relevant to this petition. Each tire must be marked on each sidewall with the information specified in paragraphs S5.5(a) through (d) and on one sidewall with the information specified in S5.5(e) through (i) according to the phase-in schedule specified in paragraph S7 of FMVSS No. 139. Specifically, each tire should be marked with the generic name of each cord material used in the plies (both sidewall and tread area) of the tire and the actual number of plies in the sidewall, and the actual number of plies in the tread area, if different.

V. Summary of Petition

Pirelli described the subject noncompliance and stated its belief that the noncompliance is inconsequential as it relates to motor vehicle safety.

In support of its petition, Pirelli submitted the following reasoning:

1. The subject tires comply with the performance requirements and all other marking requirements of FMVSS No. 139.

2. The tire construction information for the subject tires has been corrected in Pirelli's centralized R&D system that creates the drawings used in manufacturing the tire molds. Pirelli is in the process of correcting the subject molds before they are used for future production.

3. Pirelli cited the Agency as saying that it ''believes that one measure of inconsequentiality to motor vehicle safety, in this case, is that there is no effect of the noncompliance on the operational safety of vehicles on which these tires are mounted. The safety of people working in the tire retread, repair, and recycling industries must also be considered and is a measure of inconsequentiality.'' *See* 83 FR 36668 (July 30, 2018) (Grant of petition for determination of inconsequential noncompliance for Continental tires, for tires marked with the incorrect number of tread plies.

4. Pirelli stated that the subject tires were manufactured as designed and meet or exceed all applicable FMVSS No. 139 performance standards. Furthermore, all of the sidewall markings related to tire service (load capacity, corresponding inflation pressure, etc.) are correct and the tires correctly show that they contain tread plies. Pirelli does not believe the mislabeling of these tires presents a safety concern for consumers or for the retreading and recycling personnel.

5. Pirelli says that NHTSA has granted similar petitions involving tires manufactured by Cooper Tire and Goodyear (Dunlop). *See* 74 FR 10804 (March 12, 2009), grant of petition submitted by Goodyear where tires were marked ''Tread 3 Polyester + 2 Steel,'' whereas the correct marking should have been ''Tread 2 Polyester + 2 Steel + 2 Polyamide;'' 82 FR 17075 (April 7, 2017). *See* 82 FR 17075 (April 7, 2017) grant of petition submitted by Cooper Tire & Rubber Company where tires were marked ''TREAD 1 PLY NYLON + 2 PLY STEEL + 2 PLY POLYESTER,'' whereas the correct marking should have been ''TREAD 1 PLY NYLON + 2 PLY STEEL + 1 PLY POLYESTER.'' *See* 83 FR 13002 (March 26, 2018), grant of petition submitted by Sumitomo Rubber Industries Ltd. where tires were marked ''TREAD 5 PLIES STEEL'' whereas the correct marking should have been ''TREAD 4 PLIES STEEL.''

6. Pirelli is not aware of any warranty claims, field reports, customer complaints, legal claims, or any incidents or injuries related to the subject condition.

VI. NHTSA's Analysis

NHTSA has evaluated the merits of the inconsequential noncompliance petition submitted by Pirelli and agrees that this particular noncompliance is inconsequential to motor vehicle safety. NHTSA believes that the true measure of inconsequentiality to motor vehicle safety, in this case, is that there is no effect of the noncompliances on the operational safety of vehicles on which these tires are mounted.

Although tire construction affects the strength and durability, neither the Agency nor the tire industry provides information relating tire strength and durability to the ply cord material in the

tread and sidewall. Therefore, tire dealers and customers should consider the tire construction information along with other information such as load capacity, maximum inflation pressure, and tread wear, temperature, and traction ratings, to assess the performance capabilities of various tires.

The Agency also believes the noncompliance will have no measurable effect on the safety of the tire retread, repair, and recycling industries. The use of steel cord construction in the sidewall and tread is the primary safety concern of these industries. In this case, because the sidewall marking indicates that some steel plies exist in the tire tread, this potential safety concern does not exist.

In the Agency's judgment, the incorrect labeling of the tire construction information will have an inconsequential effect on motor vehicle safety because most consumers do not base tire purchases or vehicle operation parameters on the ply material in a tire.

VII. NHTSA's Decision

In consideration of the foregoing, NHTSA finds that Pirelli has met its burden of persuasion that the FMVSS No. 139 noncompliance is inconsequential as it relates to motor vehicle safety. Accordingly, Pirelli's petition is hereby granted and Pirelli is exempted from the obligation of providing notification of, and a remedy for, the noncompliance under 49 U.S.C. 30118 and 30120.

NHTSA notes that the statutory provisions (49 U.S.C. 30118(d) and 30120(h)) that permit manufacturers to file petitions for a determination of inconsequentiality allow NHTSA to exempt manufacturers only from the duties found in sections 30118 and 30120, respectively, to notify owners, purchasers, and dealers of a defect or noncompliance and to remedy the defect or noncompliance. Therefore, this decision only applies to the subject equipment that Pirelli no longer controlled at the time it determined that the noncompliance existed. However, the granting of this petition does not relieve equipment distributors and dealers of the prohibitions on the sale, offer for sale, or introduction or delivery for introduction into interstate commerce of the noncompliant equipment under their control after Pirelli notified them that the subject noncompliance existed.

Authority: (49 U.S.C. 30118, 30120: delegations of authority at 49 CFR 1.95 and 501.8)

Otto G. Matheke III,

Director, Office of Vehicle Safety Compliance.

[FR Doc. 2020–04814 Filed 3–9–20; 8:45 am]

BILLING CODE 4910–59–P

DEPARTMENT OF TRANSPORTATION

Pipeline and Hazardous Materials Safety Administration

Hazardous Materials: Notice of Actions on Special Permits

AGENCY: Pipeline and Hazardous Materials Safety Administration (PHMSA), DOT.

ACTION: Notice of actions on special permit applications.

SUMMARY: In accordance with the procedures governing the application for, and the processing of, special permits from the Department of Transportation's Hazardous Material Regulations, notice is hereby given that the Office of Hazardous Materials Safety has received the application described herein.

DATES: Comments must be received on or before April 9, 2020.

ADDRESSES: Record Center, Pipeline and Hazardous Materials Safety Administration, U.S. Department of Transportation Washington, DC 20590.

Comments should refer to the application number and be submitted in triplicate. If confirmation of receipt of comments is desired, include a self-addressed stamped postcard showing the special permit number.

FOR FURTHER INFORMATION CONTACT: Donald Burger, Chief, Office of Hazardous Materials Approvals and Permits Division, Pipeline and Hazardous Materials Safety Administration, U.S. Department of Transportation, East Building, PHH–30, 1200 New Jersey Avenue Southeast, Washington, DC 20590–0001, (202) 366–4535.

SUPPLEMENTARY INFORMATION: Copies of the applications are available for inspection in the Records Center, East Building, PHH–30, 1200 New Jersey Avenue Southeast, Washington DC.

This notice of receipt of applications for special permit is published in accordance with part 107 of the Federal hazardous materials transportation law (49 U.S.C. 5117(b); 49 CFR 1.53(b)).

Issued in Washington, DC, on February 28, 2020.

Donald P. Burger,

Chief, General Approvals and Permits Branch.

SPECIAL PERMITS DATA—GRANTED

Application No.	Applicant	Regulation(s) affected	Nature of the special permits thereof
15279–M	University of Colorado At Boulder, Ehs.	172.301(a), 172.301(b), 172.301(c), 173.199(a)(3), 173.199(a)(4), 173.199(a)(5), 178.609.	To modify the special permit to authorize new destinations due to lab increasing in size and moving.
16011–M	Americase, LLC	172.200, 172.300, 172.500, 172.400, 172.600, 172.700(a), 173.185(c), 173.185(f).	To modify the special permit to authorize an additional package.
16061–M	Battery Solutions, LLC	172.200, 172.300, 172.400, 173.185(c)(1)(iii), 173.185(c)(1)(iv), 173.185(c)(1)(v), 173.185(c)(3).	To modify the special permit to authorize additional Class 8 and 9 hazmat, to remove the UN packaging code from the permit, to clarify the term operator and to increase the maximum gross mass of CellBlockEX material per package to 400kg.
20352–M	Schlumberger Technology Corp.	173.301(f), 173.302(a), 173.304(a), 173.304(d), 178.36(f).	To modify the special permit to authorize a thinner cylinder wall thickness of the cylinder.
20549–M	Cellblock Fcs, LLC	172.400, 172.700(a), 172.102(c)(1), 172.200, 172.300.	To modify the special permit to authorize rail as an approved mode of transport.
20710–M	Kerr Corporation	173.4a(c)(2), 173.4a(e)(2)	To modify the special permit to authorize an alternative package marking (QR Code) in lieu of requiring a copy of the special permit to accompany each shipment.

SPECIAL PERMITS DATA—GRANTED—Continued

Application No.	Applicant	Regulation(s) affected	Nature of the special permits thereof
20896–N	Applied Energy Systems, Inc.	172.101(j), 173.187, 173.212, 173.240, 173.242, 176.83.	To authorizes the transportation in commerce of a gas purification apparatus containing certain Division 4.2 (spontaneously combustible solids) in non-DOT specification stainless steel pressure vessels.
20910–M	Cellblock Fcs, LLC	172.200, 172.300, 172.500, 172.400, 172.700(a)	To modify the special permit to authorize rail transportation.
20926–N	Cold Box Express, Inc	172.200, 172.600, 172.700(a)	To authorize the use of certain temperature-controlled shipping containers containing lithium ion batteries as not subject to certain shipping paper, training, and emergency response requirements.
20935–N	Daicel Safety Systems Americas, Inc.	172.320, 173.54(a), 173.56(b), 173.57, 173.58, 173.60.	To authorize the transportation in commerce of explosive articles classed as Division 1.4S, when packed in a special shipping container without being approved in accordance with 173.56.
20949–N	Sigma-Aldrich, Inc	178.601(k)	To authorize the testing of UN 4G combination packagings for the transportation in commerce of hazardous materials in which the inner packagings have been used multiple times to complete the tests in §§ 178.603, 178.606, and 178.608.
20952–N	Capella Space Corp	173.185(a)	To authorize the transportation in commerce of low production lithium ion batteries contained in equipment by cargo-only aircraft.
20958–N	University of Colorado	173.301(g), 173.24(b), 173.24(f), 173.24(g), 175.30(c)(1).	To authorize the transportation in commerce of compressed air in Specification DOT 3AA cylinders, which are used to purge sensitive equipment.
20977–N	Rocket Lab Limited	173.185(a), 173.185(b)(4)	To authorize the transportation in commerce of low production lithium ion batteries contained in equipment (launch vehicle) in non-DOT specification packagings.
20979–N	Atk Space Systems Inc		To authorize the transportation in commerce of hazardous materials over 422 feet of public roadways without being subject to the HMR.

SPECIAL PERMITS DATA—DENIED

Application No.	Applicant	Regulation(s) affected	Nature of the special permits thereof
20879–N	Aviall Services, Inc	172.200, 172.300, 172.400, 173.159(j), 173.159(j)(3), 173.159(j)(4).	To authorize the transportation in commerce of nickel-cadmium batteries as not subject to the requirements of the HMR.
20943–N	Zhejiang Meenyu Can Industry Co., Ltd.	173.304(a), 173.304(d)	To authorize the manufacture, mark, sale, and use of non-DOT specification receptacles.
20956–N	Valtris Specialty Chemicals.	171.8, 171.4, 172.203(l), 172.322, 176.70	To authorize the transportation in commerce of two materials as not meeting the § 171.8 definition of a marine pollutant.

SPECIAL PERMITS DATA—WITHDRAWN

Application No.	Applicant	Regulation(s) affected	Nature of the special permits thereof
13179–M	Recycle Aerosol, Llc	173.21(i)	To modify the special permit to authorize recycling or reclamation as well as disposal of waste hazmat.
20893–M	Daimler Ag	172.301(c), 173.185(a)	To modify the special permit to authorize the transportation in commerce of untested pre-production lithium ion batteries contained in a flammable liquid powered vehicle. (mode 4).
20945–N	Air Medical Resource Group, Inc.	172.101(j), 172.204(c)(3), 173.27(b)(2), 175.30(a)(1).	To authorize the transportation in commerce of limited quantities of hazardous materials that exceed quantity limitations by air.

SPECIAL PERMITS DATA—WITHDRAWN—Continued

Application No.	Applicant	Regulation(s) affected	Nature of the special permits thereof
20946–N	Volkswagen Ag	172.101(j)	To authorize the transportation in commerce of lithium ion batteries exceeding 35 kg net weight by cargo-only aircraft.
20981–N	Republic Helicopters, Inc	172.200, 172.300, 172.400, 173.27, 175.30, 175.33.	To authorize the transportation in commerce of refrigerating units via rotocraft external loads.
20987–N	Aji Bio-pharma	172.200, 172.400	To authorize the transportation in commerce of certain Division 6.1 hazardous materials without shipping papers and labels.

[FR Doc. 2020–04820 Filed 3–9–20; 8:45 am]

BILLING CODE 4909–60–P

DEPARTMENT OF TRANSPORTATION

Pipeline and Hazardous Materials Safety Administration

Hazardous Materials: Notice of Applications for New Special Permits

AGENCY: Pipeline and Hazardous Materials Safety Administration (PHMSA), DOT.

ACTION: List of applications for special permits.

SUMMARY: In accordance with the procedures governing the application for, and the processing of, special permits from the Department of Transportation's Hazardous Material Regulations, notice is hereby given that the Office of Hazardous Materials Safety has received the application described herein. Each mode of transportation for which a particular special permit is requested is indicated by a number in the ''Nature of Application'' portion of the table below as follows: 1—Motor vehicle, 2—Rail freight, 3—Cargo vessel, 4—Cargo aircraft only, 5—Passenger-carrying aircraft.

DATES: Comments must be received on or before April 9, 2020.

ADDRESSES: Record Center, Pipeline and Hazardous Materials Safety Administration, U.S. Department of Transportation, Washington, DC 20590.

Comments should refer to the application number and be submitted in triplicate. If confirmation of receipt of comments is desired, include a self-addressed stamped postcard showing the special permit number.

FOR FURTHER INFORMATION CONTACT: Donald Burger, Chief, Office of Hazardous Materials Approvals and Permits Division, Pipeline and Hazardous Materials Safety Administration, U.S. Department of Transportation, East Building, PHH–30, 1200 New Jersey Avenue Southeast, Washington, DC 20590–0001, (202) 366–4535.

SUPPLEMENTARY INFORMATION: Copies of the applications are available for inspection in the Records Center, East Building, PHH–30, 1200 New Jersey Avenue Southeast, Washington DC.

This notice of receipt of applications for special permit is published in accordance with part 107 of the Federal hazardous materials transportation law (49 U.S.C. 5117(b); 49 CFR 1.53(b)).

Issued in Washington, DC, on February 28, 2020.

Donald P. Burger,

Chief, General Approvals and Permits Branch.

SPECIAL PERMITS DATA

Application No.	Applicant	Regulation(s) Affected	Nature of the Special Permits thereof
20901–N	Springfield Terminal Railway Co Inc.	174.14	To authorize the storage of liquid petroleum gas (LPG) on storage tracks in serving yards close to major LPG distribution facilities. (mode 2)
21002–N	Calumet Branded Products, LLC	173.150(b)(2)	To authorize the transportation in commerce of flammable liquids as limited quantities when the inner packaging capacity exceeds the HMR authorization. (mode 1)
21005–N	Federal Cartridge Company	172.203(a), 173.56(h).	To authorize the transportation in commerce of ''small arms'' not conforming to the definition of cartridges, small arms as UN0014. (modes 1, 2, 3, 4, 5)
21006–N	Easymile Inc.	172.101(j)	To authorize the transportation in commerce of lithium ion batteries exceeding 35 kg by cargo-only aircraft. (mode 4)
21007–N	Tradewater LLC	173.306(a)(1)	To authorize the transportation in commerce of refrigerant gases as limited quantities when in receptacles exceeding 4 fluid ounces. (modes 1, 2, 3)

[FR Doc. 2020–04818 Filed 3–9–20; 8:45 am]

BILLING CODE 4909–60–P

DEPARTMENT OF TRANSPORTATION

Pipeline and Hazardous Materials Safety Administration

Hazardous Materials: Notice of Applications for Modifications to Special Permits

AGENCY: Pipeline and Hazardous Materials Safety Administration (PHMSA), DOT.

ACTION: List of applications for modification of special permits.

SUMMARY: In accordance with the procedures governing the application for, and the processing of, special permits from the Department of Transportation's Hazardous Material Regulations, notice is hereby given that the Office of Hazardous Materials Safety has received the application described herein. Each mode of transportation for which a particular special permit is requested is indicated by a number in the ''Nature of Application'' portion of the table below as follows: 1—Motor vehicle, 2—Rail freight, 3—Cargo vessel, 4—Cargo aircraft only, 5—Passenger-carrying aircraft.

DATES: Comments must be received on or before March 25, 2020.

ADDRESSES: Record Center, Pipeline and Hazardous Materials Safety Administration, U.S. Department of Transportation Washington, DC 20590.

Comments should refer to the application number and be submitted in triplicate. If confirmation of receipt of comments is desired, include a self-addressed stamped postcard showing the special permit number.

FOR FURTHER INFORMATION CONTACT: Donald Burger, Chief, Office of Hazardous Materials Approvals and Permits Division, Pipeline and Hazardous Materials Safety Administration, U.S. Department of Transportation, East Building, PHH–30, 1200 New Jersey Avenue Southeast, Washington, DC 20590–0001, (202) 366–4535.

SUPPLEMENTARY INFORMATION: Copies of the applications are available for inspection in the Records Center, East Building, PHH–30, 1200 New Jersey Avenue Southeast, Washington DC.

This notice of receipt of applications for special permit is published in accordance with part 107 of the Federal hazardous materials transportation law (49 U.S.C. 5117(b); 49 CFR 1.53(b)).

Issued in Washington, DC, on February 28, 2020.

Donald P. Burger,

Chief, General Approvals and Permits Branch.

SPECIAL PERMITS DATA

Application No.	Applicant	Regulation(s) Affected	Nature of the Special Permits thereof
7607–M	Thermo Fisher Scientific Inc.	172.101(j), 173.306	To modify the special permit to clarify the manufacturing markings. (mode 5)
10922–M	Fiba Technologies, Inc	173.302(a), 180.205, 180.207(d)(1), 172.302(c)	To modify the special permit to authorize an additional outside diameter tube for a reference standard and its associated range of cylinder diameters that can be retested by UE. (modes 1, 2, 3, 4, 5)
14951–M	Hexagon Lincoln, LLC	173.301(f), 173.302(a)	To modify the special permit to authorize permitted cylinders to have an ''in-service date'' on their labels. This date would be the date in which the cylinder was released from the Hexagon inventory and placed in the possession of the end user. (modes 1, 2, 3)
15347–M	Raytheon Missile Systems Co.	173.301, 173.302a	To modify the special permit to authorize passenger carrying aircraft as a mode of transportation. (modes 1 ,2, 3, 4, 5)
15848–M	Ambri Inc	173.222(c)(1)	To modify the special permit to clarify certain batteries, cells and power systems and the marking requirements for them and to authorize party status to the special permit. (modes 1, 2, 3)
16413–M	Amazon.com, Inc	172.301(c), 173.185(c)(1)(iii), 173.185(c)(3)(i), 173.159a(c)(1), 173.159a(c)(2), 173.185(c)(1)(iv).	To modify the special permit to authorize an additional hazmat and packaging for it and to authorize the use of QR codes to link to the latest version of the authorizing permit. (modes 1, 2)
16504–M	Idrink Products Inc	171.2(k), 172.200, 172.202(a)(5)(iii)(B), 172.300, 172.500, 172.400, 172.700(a).	To modify the special permit to bring it in line with other permits authorizing the transportation in commerce of certain used DOT Specification 3AL cylinders and containers that contain carbon dioxide, but not necessarily in an amount qualifying as hazardous material. (modes 1, 2)
16560–M	Lightstore, Inc	173.302(a)	To modify the special permit to authorize additional 2.1 and 2.2 hazmat and to authorize an increase in the allowable maximum working pressure of certain cylinders. (modes 1, 2, 3)
20324–M	General Dynamics Mission Systems, Inc.	172.101(j), 173.185(a)(1)(i)	To modify the special permit to authorize the transportation in commerce of slightly modified designs of approved batteries and cells. (mode 4)
20418–M	Cimarron Composites, LLC.	173.302(a)	To modify the special permit to authorize an additional hazardous material. (modes 1, 2, 3)

SPECIAL PERMITS DATA—Continued

Application No.	Applicant	Regulation(s) Affected	Nature of the Special Permits thereof
20474–M	Space Exploration Technologies Corp.	172.300, 172.400, 173.1	To modify the special permit to authorize an increase in tank pressure for certain propellant tanks. (modes 1, 3)
20571–M	Catalina Cylinders, Inc	173.302a, 178.71(l)(1)(i), 178.71(l)(1)(ii)	To modify the special permit to authorize an increase in the maximum service pressure and water volume. (modes 1, 2, 3, 4)
20576–M	Cylinder Testing Solutions LLC.	172.203(a), 172.301(c), 180.205	To modify the special permit to authorize specific additional procedures for the testing of 3AL cylinders with labels under the clearcoat so they can continue to be tested using ultrasound, to add specific minimum wall specifications for testing 3AL cylinders and to update the update the authorized facilities under the SP. (modes 1, 2)
20834–M	Ecc Corrosion Inc	107.503(b), 107.503(c), 173.241, 173.242, 173.243, 178.345–1(d), 178.345–1(f), 178.345–2, 178.345–3, 178.345–4, 178.345–7, 180.405, 180.413.	To modify the special permit to authorize a redesign of the cargo tanks, to clarify the tank capacity and to modify the safety factor. (mode 1)
20861–M	Ayalytical Instruments Inc.	173.120(c)	To modify the special permit to authorize an additional ASTM Standard Test Method D6450. (modes 1, 2, 3, 4, 5)
20902–M	Eastern Upper Peninsula Transportation Authority.	176.164(e)	To modify the special permit to authorize additional hazmat. (mode 3)
20907–M	Versum Materials, Inc	171.23(a), 171.23(a)(3)	To modify the special permit to remove the requirement for a dedicated fleet for delivery and allow 3rd party vendors to make deliveries. (modes 1, 3)
20948–M	Kocsis Technologies, Inc	173.302(a)	To modify the special permit to remove references to specific drawings. (modes 1, 2, 3, 4)

[FR Doc. 2020–04819 Filed 3–9–20; 8:45 am]
BILLING CODE 4909–60–P

DEPARTMENT OF THE TREASURY

Internal Revenue Service

Open Meeting of the Taxpayer Advocacy Panel Joint Committee

AGENCY: Internal Revenue Service (IRS), Treasury.

ACTION: Notice of meeting.

SUMMARY: An open meeting of the Taxpayer Advocacy Panel Joint Committee will be conducted. The Taxpayer Advocacy Panel is soliciting public comments, ideas, and suggestions on improving customer service at the Internal Revenue Service.

DATES: The meeting will be held Thursday, April 23, 2020.

FOR FURTHER INFORMATION CONTACT: Gilbert Martinez at 1–888–912–1227 or (737) 800–4060.

SUPPLEMENTARY INFORMATION: Notice is hereby given pursuant to Section 10(a)(2) of the Federal Advisory Committee Act, 5 U.S.C. App. (1988) that an open meeting of the Taxpayer Advocacy Panel Joint Committee will be held Thursday, April 23, 2020, at 1:30 p.m. Eastern Time via teleconference. The public is invited to make oral comments or submit written statements for consideration. For more information please contact Gilbert Martinez at 1–888–912–1227 or (737–800–4060), or write TAP Office, 3651 S IH–35, STOP 1005 AUSC, Austin, TX 78741, or post comments to the website: *http://www.improveirs.org.*

The agenda will include various committee issues for submission to the IRS and other TAP related topics. Public input is welcomed.

Dated: March 4, 2020.

Kevin Brown,

Acting Director, Taxpayer Advocacy Panel.

[FR Doc. 2020–04793 Filed 3–9–20; 8:45 am]
BILLING CODE 4830–01–P

FEDERAL REGISTER

Vol. 85 Tuesday,

No. 47 March 10, 2020

Part II

National Credit Union Administration

12 CFR Parts 701, 702, 709, et al.
Subordinated Debt; Proposed Rule

NATIONAL CREDIT UNION ADMINISTRATION

12 CFR Parts 701, 702, 709, and 741

RIN 3133–AF08

Subordinated Debt

AGENCY: National Credit Union Administration (NCUA).

ACTION: Proposed rule.

SUMMARY: The NCUA Board (Board) is proposing to amend various parts of the NCUA's regulations to permit low-income designated credit unions (LICUs), Complex Credit Unions, and New Credit Unions to issue Subordinated Debt for purposes of regulatory capital treatment. Specifically, this proposed rule would create a new subpart in the NCUA's final risk-based capital rule (RBC Rule) that would address the requirements for and regulatory capital treatment of Subordinated Debt. This new subpart would, among other things, contain requirements related to applying for authority to issue Subordinated Debt, credit union eligibility to issue Subordinated Debt, prepayments, disclosures, securities laws, and the terms of a Subordinated Debt Note. This proposed rule also makes various additions and amendments to other parts and sections of the NCUA's regulations.

DATES: Comments must be received on or before July 8, 2020.

ADDRESSES: You may submit written comments, identified by RIN 3133–AF08, by any of the following methods (Please send comments by one method only):

- *Federal eRulemaking Portal: http://www.regulations.gov.* Follow the instructions for submitting comments.
- *Fax:* (703) 518–6319. Include ''[Your Name]—Comments on Proposed Rule: Subordinated Debt'' in the transmittal.
- *Mail:* Address to Gerard Poliquin, Secretary of the Board, National Credit Union Administration, 1775 Duke Street, Alexandria, Virginia 22314–3428.
- *Hand Delivery/Courier:* Same as mail address.

Public Inspection: You may view all public comments on the Federal eRulemaking Portal at *http://www.regulations.gov,* as submitted, except for those we cannot post for technical reasons. The NCUA will not edit or remove any identifying or contact information from the public comments submitted. You may inspect paper copies of comments in the NCUA's law library at 1775 Duke Street, Alexandria, Virginia 22314, by appointment weekdays between 9 a.m. and 3 p.m. To make an appointment, call (703) 518–6546 or email *OGCMail@ncua.gov.*

FOR FURTHER INFORMATION CONTACT: Tom Fay, Director of Capital Markets; or Justin M. Anderson, Senior Staff Attorney, Office of General Counsel, 1775 Duke Street, Alexandria, VA 22314–3428. Tom Fay can also be reached at (703) 518–1179, and Justin Anderson can be reached at (703) 518–6540.

SUPPLEMENTARY INFORMATION:

Table of Contents

I. Background
A. History
B. Legal Authority
C. Credit Union Data
D. Summary of the Proposed Rule
E. Securities Law Issues
II. Proposed Changes
A. Part 701—Organization and Operations of Federal Credit Unions
B. Part 702—Capital Adequacy
C. Subpart D—Subordinated Debt, Grandfathered Secondary Capital, and Regulatory Capital
D. Part 709—Involuntary Liquidation of Federal Credit Unions and Adjudication of Creditor Claims Involving Federally Insured Credit Unions in Liquidation
E. Part 741—Requirements for Insurance
III. Regulatory Procedures
A. Paperwork Reduction Act
B. Executive Order 13132
C. Assessment of Federal Regulations and Policies on Families
Part 701—Organization and Operations of Federal Credit Unions
§ 701.25 Loans to Credit Unions
§ 701.34 Designation of Low Income Status
§ 701.38 Borrowed Funds
Part 702—Capital Adequacy
§ 702.2 Definitions
§ 702.104 Risk-Based Capital Ratio
§ 702.109 Prompt Corrective Action for Critically Undercapitalized Credit Unions
§ 702.205 Prompt Corrective Action for Uncapitalized New Credit Unions
§ 702.206 Revised Business Plans (RBP) for New Credit Unions
§ 702.207 Consideration of Subordinated Debt and Grandfathered Secondary Capital for New Credit Unions
Subpart D—Subordinated Debt, Grandfathered Secondary Capital, and Regulatory Capital
§ 702.401 Purpose and Scope
§ 702.402 Definitions
§ 702.403 Eligibility
§ 702.404 Requirements of the Subordinated Debt and Subordinated Debt Note
§ 702.405 Disclosures
§ 702.406 Requirements Related to the Offer, Sale, and Issuance of Subordinated Debt Notes
§ 702.407 Discounting of Amount Treated as Regulatory Capital
§ 702.408 Preapproval To Issue Subordinated Debt
§ 702.409 Preapproval for Federally Insured, State-Chartered Credit Unions To Issue Subordinated Debt
§ 702.410 Interest Payments on Subordinated Debt
§ 702.411 Prior Written Approval To Prepay Subordinated Debt
§ 702.412 Effect of a Merger or Dissolution on the Treatment of Subordinated Debt as Regulatory Capital
§ 702.413 Repudiation Safe Harbor
§ 702.414 Regulations Governing Grandfathered Secondary Capital
Part 709—Involuntary Liquidation of Federal Credit Unions and Adjudication of Creditor Claims Involving Federally Insured Credit Unions in Liquidation
§ 709.5 Payout Priorities in Involuntary Liquidation
Part 741—Requirements of Insurance
§ 741.204 Maximum Public Unit and Nonmember Accounts, and Low-Income Designation
§ 741.226 Subordinated Debt
§ 741.227 Loans to Credit Unions

I. Background

A. History

1. Secondary Capital for LICUs

In 1996, the Board finalized § 701.34 of the NCUA's regulations to permit LICUs to raise secondary capital from foundations and other philanthropic-minded non-natural person members and non-members.[1] The Board issued the rule to provide an additional way for a LICU to build regulatory capital in order to serve two specific purposes: (1) Support greater lending and financial services in the communities served by the LICU; and (2) absorb losses to prevent the LICU from failing.

In 1998, as part of the Credit Union Membership Access Act (CUMAA),[2] Congress amended the Federal Credit Union Act (the Act) to institute a system of prompt corrective action for federally insured credit unions based on a credit union's level of net worth. Relevant to this proposed rule, CUMAA specifically defined ''net worth,'' among other things, to include secondary capital issued by a LICU provided that the secondary capital be uninsured and subordinate to all other claims against the LICU, including the claims of creditors, shareholders, and the National Credit Union Share Insurance Fund (NCUSIF).[3]

[1] *See* 61 FR 50696 (Sept. 27, 1996) (final rule); see also 61 FR 3788 (Feb. 2, 1996) (interim final rule); 12 CFR 701.34.

[2] *Credit Union Membership Access Act of 1998,* Public Law 105–219, 301, 112 Stat. 913, 929 (codified at 12 U.S.C. 1790d(o)(2)(C) (1998)).

[3] *Id.*

In 2006, the Board further amended § 701.34 to require regulatory approval of a LICU's secondary capital plan before the LICU could issue secondary capital.[4] In the preamble to the final 2006 rule, the Board noted that LICUs had sometimes used secondary capital to achieve goals different from those for which it was originally intended. It also highlighted a pattern of ''lenient practices'' by LICUs issuing secondary capital, which contributed to excessive net operating costs, high losses from loan defaults, and a shortfall in revenue.[5] The Board stated:

> These practices include: (1) Poor due diligence and strategic planning in connection with establishing and expanding member service programs such as ATMs, share drafts and lending (*e.g.,* member business loans (''MBLs'') real estate and subprime); (2) Failure to adequately perform a prospective cost/benefit analysis of these programs to assess such factors as market demand and economies of scale; (3) Premature and excessively ambitious concentrations of [Uninsured Secondary Capital] to support unproven or poorly performing programs; and (4) Failure to realistically assess and timely curtail programs that, in the face of mounting losses, are not meeting expectations. When they occur, these lenient practices contribute to excessive net operating costs, high losses from loan defaults, and a shortfall in revenues (due to non-performing loans and poorly performing programs)—all of which, in turn, produce lower than expected returns.[6]

The Board also stated:

> Promoting diligent practices in place of lenient ones cannot help but improve the safety and soundness of LICUs. Requiring prior approval of [an Uninsured Secondary Capital] Plan will strengthen supervisory oversight and detection of lenient practices in several ways. First, it will prevent LICUs from accepting and using [Uninsured Secondary Capital] for purposes and in amounts that are improper or unsound. Second, the approval requirement will ensure that [Uninsured Secondary Capital] Plans are evaluated and critiqued by the Region before being implemented. Third, for both the NCUA and the LICU, an approved [Uninsured Secondary Capital] Plan will document parameters to guide the proper implementation of [Uninsured Secondary Capital], and to measure the LICU's progress and performance.[7]

The Current Secondary Capital Rule[8] provides that secondary capital accounts must:

- Be established as an uninsured secondary capital account or another form of non-share account;
- Have a minimum maturity of five years;
- Not be insured by the NCUSIF or any governmental or private entity;
- Be subordinate to all other claims against the LICU, including those of shareholders, creditors, and the NCUSIF;
- Be available to cover losses that exceed the LICU's net available reserves and, to the extent funds are so used, a LICU may not restore or replenish the account under any circumstances.[9] Further, losses must be distributed *pro rata* among all secondary capital accounts held by the LICU at the time the loss is realized;
- Not be pledged or provided by the investor as security on a loan or other obligation with the LICU or any other party;
- Be evidenced by a contract agreement between the investor and the LICU that reflects the terms and conditions mandated by the Current Secondary Capital Rule and any other terms and conditions not inconsistent with that rule;
- Be accompanied by a disclosure and acknowledgment form as set forth in the appendix to the Current Secondary Capital Rule;
- Not be repaid, including any interest or dividends earned thereon, if the Board has prohibited repayment thereof under §§ 702.204(b)(11), 702.304(b), or 702.305(b) of the NCUA's regulations because the LICU is classified as ''Critically Undercapitalized''; or, if a LICU is a New Credit Union (as defined under § 702.2 of the NCUA's regulations), as ''Moderately Capitalized,'' ''Marginally Capitalized,'' ''Minimally Capitalized,'' or ''Uncapitalized;''
- Be recorded on the LICU's balance sheet;[10]
- Be recognized as net worth in accordance with the schedule for recognizing net worth value in subsection (c)(2) of the Current Secondary Capital Rule;
- Be closed and paid out to the account investor in the event of a merger or other voluntary dissolution of a LICU, to the extent the secondary capital is not needed to cover losses at the time of the merger or dissolution (does not apply in the case where a LICU merges into another LICU); and
- Only be repaid at maturity,[11] except that, with the prior approval of the NCUA and provided the terms of the account allow for early repayment, a LICU may repay any portion of secondary capital that is not recognized as net worth.[12]

The Current Secondary Capital Rule also includes requirements related to secondary capital plan submissions and approvals, redemption of secondary capital, disclosures, and regulatory capital treatment.

As noted above, since the passage of the CUMAA, a LICU that issues secondary capital is permitted to include the aggregate outstanding principal amount of that secondary capital in its Net Worth. Further, pursuant to the NCUA's currently effective risk-based net worth requirements, a LICU is also permitted to include such secondary capital in its risk-based net worth calculation. By contrast, a non-LICU lacks the authority to issue secondary capital and, to the extent it issues any instruments analogous to secondary capital, to include any such instruments in either its Net Worth or its risk-based net worth calculation.

In October 2015, the Board finalized a rule to replace the current risk-based net worth requirement with a risk-based capital (RBC) requirement.[13] Under this revised standard, a LICU will be permitted to include secondary capital in its RBC calculations in the same fashion as it currently includes secondary capital in its risk-based net worth calculation. With this proposed rule, the Board now proposes to grant certain non-LICUs the authority to issue instruments in the form of subordinated debt and allow those instruments to be counted in their respective RBC calculations. This new authority,

[4] 71 FR 4234 (Jan. 26, 2006).

[5] *Id.* at 4236. Before 2006, a LICU was required to submit a copy of its secondary capital plan to the NCUA, but it was not required to obtain preapproval.

[6] *Id.* at 4236–37.

[7] *Id.* at 4237.

[8] 12 CFR 701.34. The last substantive amendment to the NCUA's secondary capital rule were in 2010 with the addition of language regarding secondary capital received under the Community Development Capital Initiative of 2010. 75 FR 57843 (Sept. 23, 2010).

[9] This generally means that when net operating losses exceed Retained Earnings, a LICU needs to first use the secondary capital funds to cover the excess amount.

[10] While the Current Secondary Capital Rule requires a LICU to record secondary capital accounts on its balance sheet as ''equity accounts,'' generally accepted accounting principles in the United States require secondary capital accounts to generally be recorded as ''debt.'' *See* FASB (Financial Accounting Standards Board), ASC 942–405–25–3 and 25–4. The instructions to the 5300 Call Report require all federally insured credit unions to report any secondary capital in the Liability section of the Statement of Financial Condition.

[11] A LICU may not issue a secondary capital account that amortizes over its stated term.

[12] *See* 12 CFR 701.34(d).

[13] 80 FR 66626 (Oct. 29, 2015). The Board has twice delayed the effective date for the final RBC Rule. First, in 2018, the effective date was delayed by one year, from January 1, 2019, to January 1, 2020. 83 FR 55467 (Nov. 6, 2018). Second, based on Board action at the December 2019 Board meeting, the effective date has been delayed for an additional two years from January 1, 2020 to January 1, 2022.

however, would not permit non-LICUs to include subordinated debt in Net Worth.

As discussed in more detail in the following subsections, under this proposed rule, certain non-LICUs would be permitted to issue Subordinated Debt and include such debt in their RBC calculation. In addition, under this proposed rule, all LICUs would be permitted to issue Subordinated Debt for Regulatory Capital treatment.[14] Under this proposed rule, an Issuing Credit Union (defined in § 702.402 of the proposed rule) would be subject to the various requirements discussed in this preamble, including, but not limited to, securities laws, which are further discussed in section I. (E) of this preamble.

2. Subordinated Debt for LICUs and Certain Non-LICUs

RBC

In the proposed RBC rule issued in 2015,[15] the Board requested stakeholder input on supplemental capital.[16] Specifically, the Board posed the following six questions:

(1) Should additional supplemental forms of capital be included in the RBC [ratio] numerator and how would including such capital protect the NCUSIF from losses?

(2) If yes to be included in the RBC [ratio] numerator, what specific criteria should such additional forms of capital reasonably be required to meet to be consistent with [United States generally accepted accounting practices (U.S. GAAP)] and the [FCU] Act, and why?

(3) If certain forms of certificates of indebtedness were included in the RBC ratio numerator, what specific criteria should such certificates reasonably be required to meet to be consistent with [U.S.] GAAP and the [FCU] Act, and why?

(4) In addition to amending the NCUA's RBC regulations, what additional changes to the NCUA's regulations would be required to count additional supplemental forms of capital in the NCUA's RBC ratio numerator?

(5) For [federally insured,] state-chartered credit unions, what specific examples of supplemental capital currently allowed under state law do commenters believe should be included in the RBC ratio numerator, and why should they be included?

(6) What investor suitability, consumer protection, and disclosure requirements should be put in place related to additional forms of supplemental capital? [17]

In response to these questions, a majority of the commenters who addressed supplemental capital stated that it was imperative that the Board consider allowing credit unions to issue additional forms of capital. The commenters suggested this authority was particularly important because credit unions are at a disadvantage in the financial marketplace because most lack access to additional capital outside of Retained Earnings.

While none of the commenters offered specific suggestions on how to implement supplemental capital, a few suggested that the Board promulgate broad, non-prescriptive rules to allow credit unions maximum flexibility in issuing supplemental capital.

2017 Advance Notice of Proposed Rulemaking (ANPR)

On February 8, 2017, the Board published an ANPR to solicit comments on alternative forms of capital that credit unions could use in meeting capital standards required by statute and regulation.[18] In response, the Board received 756 comments.

Of the 756 comments received, 688 appeared to be derived from one form letter.[19] The form letter opposed the NCUA proceeding with a supplemental capital proposal, reasoning that allowing credit unions to issue supplemental capital would result in credit unions having an ownership structure similar to most tax-paying banks. It also maintained that credit unions have poorly managed existing secondary capital and suggested that, when combined with the necessary compliance with federal and state securities laws, this would result in widespread credit union failures and taxpayer bailouts. In addition, commenters that opposed a supplemental capital proposal generally stated that the FCU Act does not permit credit unions to issue supplemental capital.

The Board disagrees with these assertions. First, most LICUs that have issued secondary capital generally have managed such capital well. Since the NCUA began requiring LICUs to obtain prior approval before issuing secondary capital, the Board is not aware of material losses to the NCUSIF resulting from the mismanagement of secondary capital. Further, the Board is proposing clear and robust requirements related to securities laws compliance, which will help ensure that Issuing Credit Unions are able to effectively navigate the complex framework of securities laws. Finally, as detailed more fully in section I. (B) of this preamble, section 1757(9) of the FCU Act grants a Federal Credit Union (FCU) the authority to issue debt instruments of the type contemplated by the ANPR and now by this proposed rule.[20] The authority of a federally insured, state-chartered credit union (FISCU) to issue such instruments is derived from applicable state law.

In addition to the form comment letters, the Board received 68 unique comments in response to the ANPR. Most of those comments supported proposing a rule to allow non-LICUs to issue an alternative form of capital. A majority of the commenters in favor of a proposal cited compliance with the NCUA's RBC Rule as the main reason for their support. Other reasons for support included credit union growth, protection from economic downturns, and providing services demanded by members.

In general, the comments lacked specificity, and very few commenters addressed all or even most of the questions that the Board posed. Nevertheless, they covered a wide range of topics and offered varying levels of support for certain provisions. A discussion of more specific commenter feedback follows. The Board notes that, as demonstrated by the remainder of this preamble, it considered all comments to the ANPR in developing this proposed rule.

Permissible Investors

Commenters opining on permissible investors typically addressed two distinct issues: Membership of investors and classification of investors. Eighteen commenters addressed the membership of investors. More than half of these commenters believed that both members

[14] This proposal would not change the ability of a LICU to include Subordinated Debt in its Net Worth in the same manner in which it currently includes secondary capital in its net worth.

[15] 80 FR 4340 (Jan. 27, 2015).

[16] *Id.* at 4384. The Board notes that when the agency began to consider authorizing non-LICU credit unions to issue instruments analogous to secondary capital instruments issued by LICUs, it used the term ''supplemental capital'' to refer to those instruments. In 2017, when the Board issued an advance notice of proposed rulemaking on this topic, the NCUA used the umbrella term ''alternative capital'' to refer to both supplemental capital and secondary capital. In light of FCUs' authority only to issue *debt* instruments, however, the Board believes that it is more appropriate and accurate to use the umbrella term ''Subordinated Debt'' to refer to both secondary capital and what was once referred to as supplemental capital. It is important to note that, unless the context otherwise requires, the term ''Subordinated Debt'' refers to BOTH types of debt instruments.

[17] *Id.*

[18] 82 FR 9691 (Feb. 8, 2017).

[19] While there were slight modifications to some letters, the substance of each letter was the same.

[20] 12 U.S.C. 1757(9).

and non-members should be permitted to invest in supplemental capital, citing both market and flexibility advantages for Issuing Credit Unions. Five commenters believed that restricting investment to members would help preserve the mutual, member-owned structure of credit unions. One commenter argued that only non-members should be permissible investors.

On the topic of investor classification, commenters were split almost evenly between providing maximum flexibility by permitting all persons to purchase supplemental capital and restricting investors to only non-natural persons or accredited investors. Commenters in favor of limiting the classes of potential investors stated that by only permitting more sophisticated investors, it would allow the NCUA's supplemental capital rule to be more flexible with respect to required disclosures.

As discussed in more detail in section II. (C)(4) of this preamble, the Board is proposing to allow credit unions to issue Subordinated Debt to both members and non-members, provided the investor meets the definition of either ''Entity Accredited Investor'' or ''Natural Person Accredited Investor.'' These terms are further discussed in sections II. (C)(2) and (4) of this preamble.

Disclosures

Twenty-seven commenters addressed the issue of disclosures. The majority of these commenters urged the NCUA to model any required disclosures after those established by the Office of the Comptroller of the Currency (OCC) or the Securities and Exchange Commission (SEC). These commenters maintained that these disclosures provide the highest level of investor and credit union protection and are the most familiar to investors. As discussed in greater detail in section II. (C)(5) of this preamble, the Board generally modeled the proposed disclosures in this rule after those required by the OCC and SEC.

Registration

Nine commenters that addressed this issue advocated against requiring any form of registration with the NCUA before supplemental capital issuances. These commenters stated that the NCUA should require credit unions to follow SEC rules, which would likely exempt them from registration with the SEC. The commenters further cited flexibility and cost as reasons against registering with the NCUA. In addition, three commenters advocated for registration, citing safety and soundness concerns and comparability with the OCC's rules for national banks and federal savings associations.

While the Board is not proposing a formal registration process similar to that employed by the SEC for securities issuances registered under the Securities Act of 1933, as amended (Securities Act), the proposed rule would require any credit union contemplating an offer or sale of Subordinated Debt Notes (as defined in § 702.402 of the proposed rule) to obtain the NCUA's prior written approval before engaging in that activity. In addition, under this rule, every such offer and sale of Subordinated Debt Notes would require the preparation and delivery of certain offering materials to investors that conform to this rule's requirements and all applicable federal and state securities law (Offering Documents). Depending on whether a potential investor is an Entity Accredited Investor or a Natural Person Accredited Investor (each as defined in section II. (C)(2)), the Issuing Credit Union may need to obtain the NCUA's prior written approval before it uses such offering materials to offer and sell the Subordinated Debt Notes. See II. (C)(4) and (C)(6) of this preamble for detailed discussions about these requirements.

Permissible Instruments

Thirty-four commenters addressed the topic of permissible instruments. Of these commenters, 22 favored a broad, principles-based approach to identifying permissible instruments, believing such an approach would allow credit unions to more easily meet the demands of investors and lower the cost of issuance. These commenters stated that the Board should provide a list of broad qualifications for a capital instrument and that any instrument fitting those qualifications should count as regulatory capital. While commenters did not clearly describe qualifications the Board should impose, some cited Basel III [21] and the Current Secondary Capital Rule as possible models for the qualifications.

Conversely, the remaining 12 commenters addressing this topic stated that the Board should only permit debt instruments to count as regulatory capital, citing purchasers of debt lack of voting rights, ownership, and influence over credit unions. These commenters argued that limiting the type of instrument to debt was an additional protection against erosion of the mutual structure and potential loss of the credit union tax exemption. Please see the following section in this preamble for a detailed discussion of permissible instruments.

B. Legal Authority

1. Authority To Issue Subordinated Debt

The borrowing authority granted to FCUs by the FCU Act, along with FCUs' statutory authority to enter into contracts and exercise incidental powers necessary or required to enable the FCUs to effectively carry on their business, supports the legal analysis that FCUs are authorized to incur indebtedness through the issuance of debt securities of the type contemplated by this proposed rule. Section 1757(9) of the FCU Act authorizes FCUs:

> to borrow, in accordance with such rules and regulations as may be prescribed by the Board, from any source, in an aggregate amount not exceeding, except as authorized by the Board in carrying out the provisions of subchapter III of this chapter, 50 per centum of its paid-in and unimpaired capital and surplus: Provided, That any Federal credit union may discount with or sell to any Federal intermediate credit bank any eligible obligations up to the amount of its paid-in and unimpaired capital.[22]

Other than the provisions of § 701.38 of the NCUA's regulations, which addresses borrowed funds from natural persons, the FCU Act does not provide any details as to the mechanisms that FCUs may employ to borrow.[23] Further, section 201(b)(7) of the FCU Act implicitly allows credit unions to issue securities.[24] Conversely, nothing in section 1757(9) or other provisions of the FCU Act appears to impose any specific restrictions or limitations on the mechanisms FCUs may employ to borrow, through the use of specific

[21] Basel Committee on Banking Supervision, Basel III: *A global regulatory framework for more resilient banks and banking systems.* (2011).

[22] 12 U.S.C. 1757(9).

[23] In contrast, certain provisions of Title 12 of the United States Code relating to the regulation of other types of financial institutions expand on the institutions' basic authority to borrow money, including through the issuance of securities. For example, a Farm Credit System member is specifically authorized to:

(a) Borrow money from or loan to any other institution of the System, borrow from any commercial bank or other lending institution, issue its notes or other evidence of debt on its own individual responsibility and full faith and credit, and invest its excess funds in such sums, at such times, and on such terms and conditions as it may determine.

(b) Issue its own notes, bonds, debentures, or other similar obligations, fully collateralized as provided in section 2154(c) of this title by the notes, mortgages, and security instruments it holds in the performance of its functions under this chapter in such sums, maturities, rates of interest, and terms and conditions of each issue as it may determine with approval of the Farm Credit Administration.

12 U.S.C.2153(a)(b).

[24] *Id.* section 1781(b)(7)

limiting language, examples or illustrative transactions or situations, or otherwise. This stands in sharp contrast to many other subsections of section 1757 of the FCU Act which, for example, go into significant detail describing the types and terms of loans and extensions of credit that FCUs are permitted to make,[25] and define the types of investments FCUs are permitted to make.[26] In addition, the NCUA's regulations do not impose any specific restrictions or limitations on the mechanisms an FCU may employ to borrow, through the use of specific limiting language, examples, illustrative transactions, or situations.

Overall, the lack of specific restrictions or limitations on the mechanisms that may be employed and the specific authority granted in section 1757(9) to borrow ''from any source'' indicate that borrowings need not be limited to the types of arrangements typically entered into with banks, other credit unions, and other financial institutions—namely, loans, lines of credit, and similar arrangements. Further, the specific authority provided in section 1757(1) of the FCU Act empowering FCUs to enter into contracts [27] further supports the conclusion that FCUs have the power to enter into a variety of different arrangements with respect to borrowing.[28] In addition, in the absence of specific restrictions and limitations, the ''incidental powers'' granted to FCUs in section 1757(17) of the FCU Act give significant discretion to FCUs with respect to how borrowings are effected.

Further support for the position that FCUs have the authority to issue debt securities may be found in U.S. GAAP treatment of items that fall in the category of ''borrowings.'' Under U.S. GAAP, liabilities relating to borrowed money are presented as indebtedness on an entity's balance sheet, and the interest paid is presented as interest expense on its income statement, whether the borrowings are related to typical loan transactions, advances under lines of credit, or the issuance of debt securities. While the details of the different types of indebtedness for borrowed money are presented as separate line items in an entity's balance sheet and income statement, the treatment of ''straight'' indebtedness (indebtedness that does not have equity/residual ownership features, such as convertibility into shares) as liabilities, and interest paid thereon as interest expense, is essentially the same. In addition, while the details of the different types of indebtedness for borrowed money are presented as separate line items in the statement of cash flows, borrowings, whether in the form of loans from financial institutions or from the issuance of debt securities, are all presented in the ''cash flows from financing activities'' section of the statement.

Throughout this proposed rule, the Board has included requirements to ensure that any Subordinated Debt issued by an Issuing Credit Union would be properly characterized as debt in accordance with U.S. GAAP. These requirements, as discussed in more detail in this preamble, include that the Subordinated Debt or the Subordinated Debt Note, as applicable, must:

- Be in the form of a written, unconditional promise to pay on a specified date a sum certain in money in return for adequate consideration in money;
- Have, at the time of issuance, a fixed stated maturity of at least five years and not more than 20 years from issuance. The stated maturity of the Subordinated Debt Note may not reset and may not contain an option to extend the maturity; and
- Be properly characterized as debt in accordance with U.S. GAAP.

The Board notes that a FISCU's legal authority to issue Subordinated Debt derives from applicable state law and regulation. For the Subordinated Debt issued by a FISCU to qualify as regulatory capital under this proposed rule, however, the FISCU would be required to comply with all of the provisions of this rule, including the FISCU-specific provisions that are detailed in section II. (C)(9) of this preamble.

2. The Board's Authority To Design RBC Standards

In addition to credit unions' authority to issue Subordinated Debt, the FCU Act also provides the Board with broad discretion to design the risk-based net worth standards.[29] Specifically, the FCU Act provides, in relevant part:

> The Board shall design the risk-based net worth requirement to take account of any material risks against which the net worth ratio required for an insured credit union to be ''Adequately Capitalized'' may not provide adequate protection.[30]

In designing such a risk-based net worth standard, Congress did not restrict the types of instruments the Board may include in its calculation of risk-based net worth, except that such calculation must take account of material risks that the Net Worth Ratio alone may not protect against. The Board, as discussed in this preamble, is proposing this rule to grant authority to LICUs, Complex Credit Unions, and New Credit Unions to issue Subordinated Debt that will count as regulatory capital. Based on the requirements in this proposed rule, the Board believes Subordinated Debt will be an additional tool that accounts for material risks faced by credit unions against which the Net Worth Ratio alone may not protect.

While the Board has broad discretion to create the risk-based net worth standard, it does not have the authority to amend the statutory definition of net worth. Currently, the statutory definition of net worth includes secondary capital issued by a LICU that is uninsured and subordinate to all claims against the LICU. As such, the Board notes two points with respect to Subordinated Debt and Net Worth. First, Subordinated Debt issued by a non-LICU will not be included in that credit union's Net Worth or Net Worth Ratio. Second, Subordinated Date issued by a LICU after the effective date of a final Subordinated Debt rule will be included in that credit union's Net Worth and Net Worth Ratio.

C. Credit Union Data [31]

As of June 30, 2019, there are 2,618 LICUs. Under this proposed rule, LICUs would continue to be eligible to issue Subordinated Debt. This proposed rule would newly authorize certain non-LICUs to be eligible to issue Subordinated Debt. Specifically, Complex Credit Unions and New Credit Unions would also be eligible to issue Subordinated Debt. The NCUA estimates that this proposed rule would allow an additional 285 non-LICUs, with total assets of $730 billion, to issue Subordinated Debt.

[25] *Id.* 1757(5).

[26] *Id.* 1757(7); (15).

[27] *Id.* 1757(1).

[28] Typical loan and line of credit arrangements entered into with banks, other credit unions and other financial institutions are clearly contractual in nature. Debt securities are also generally viewed as primarily contractual in nature, in large measure because of the terms of the securities themselves or the terms incorporated into the securities through an indenture, an issuing and paying agent agreement or similar agreement. This view of debt securities has been expressed in a wide variety of court cases. *See, e.g., Katz* v. *Oak Industries, Inc.,* 508 A.2d 873, 878 (Del. Ch. 1986)) (''Under our law—and the law generally—the relationship between a corporation and the holders of its debt securities, even convertible debt securities, is contractual in nature.'').

[29] As discussed above, the Board finalized a rule to replace the regulatory risk-based net worth requirement with an RBC requirement.

[30] 12 U.S.C. 1790d(d).

[31] Data from NCUA Call Report.

Proposed eligible	# of credit unions	Total industry assets	Average net worth ratio (%)
LICU	2,618	$628 billion	13
LICU—New Credit Union	10	$24 million	23
Non-LICU Complex Credit Union	281	$730 billion	11
Non-LICU New Credit Union	4	$12 million	44
Proposed Not Eligible			
Non-LICU Non-Complex Credit Union	2,409	$162 billion	14

Total Assets and average Net Worth Ratios rounded. Only one of the 281 Non-LICU Complex Credit Unions had a Net Worth Ratio category of ''Undercapitalized.''

D. Summary of the Proposed Rule

This proposed rule reflects not only the responses to the ANPR discussed above, but also research by NCUA staff, consultation with outside legal counsel, and a comprehensive review of the various current NCUA regulations, including the Current Secondary Capital Rule. The Board believes this proposal represents a balance between flexibility for credit unions and its responsibility to safeguard the NCUSIF and protect the safety and soundness of credit unions.

This proposed rule would permit LICUs, Complex Credit Unions, and New Credit Unions to issue Subordinated Debt Notes for purposes of regulatory capital treatment.[32] It contains a series of requirements with respect to the Subordinated Debt and Subordinated Debt Note, disclosures and offering materials, repayment (including prepayment), and regulatory capital treatment. It also includes an application procedure for both the issuance and repayment of Subordinated Debt Notes.

In addition, the Board is proposing requirements related to the various securities law issues applicable to the offer, issuance, and sale of Subordinated Debt Notes. See sections I. (E) and II. (C)(6) and (8) in this preamble for a detailed discussion of these requirements.

This proposed rule also makes various additions and amendments to other parts and sections of the NCUA's regulations. Specifically, this proposed rule would include: A new section addressing limits on loans to other credit unions; a grandfathering of any secondary capital issued before the effective date of a final Subordinated Debt rule (Grandfathered Secondary Capital); an expansion of the borrowing rule to clarify that FCUs can borrow from any source; revisions to the RBC Rule and the payout priorities in an involuntary liquidation rule to account for Subordinated Debt and Grandfathered Secondary Capital; and cohering changes to part 741 to account for the other changes proposed in this rule that apply to FISCUs.

All secondary capital issued after the effective date of a final Subordinated Debt rule would be subject to the requirements for Subordinated Debt. This change would not impact a LICU's ability to include such instruments in its Net Worth.

As noted above, secondary capital issued before the effective date of a final Subordinated Debt rule would be considered Grandfathered Secondary Capital. This proposal would also preserve the regulatory capital treatment of Grandfathered Secondary Capital for 20 years after the effective date of a final Subordinated Debt rule. Grandfathered Secondary Capital, under this proposal, would generally remain subject to the requirements in current §§ 701.34(b) through (d) (Current Secondary Capital Rule). For ease of reference, the requirements in the Current Secondary Capital Rule would be moved from their current location to a section in the new proposed subpart.

Finally, the Board has made cohering changes to various section of the NCUA's regulations. Specifically, this proposed rule includes:

- A new § 701.25, which places limits on FCU loans to other credit unions;
- Recodification of § 701.34 (b), (c), and (d) as § 702.414 to address Grandfathered Secondary Capital;
- An update to § 701.38 that clarifies that FCUs can borrow from any source;
- Changes and additions to the final RBC Rule to account for Subordinated Debt issued by Complex Credit Unions and New Credit Unions;
- An update to the involuntary liquidation payout priorities in § 709.5 to account for Subordinated Debt; and
- Changes to part 741 to account for FISCUs investing in or issuing Subordinated Debt and the treatment of Grandfathered Secondary Capital.

These additional regulatory changes were necessary to ensure that this proposal represents a comprehensive review and revision of the NCUA's regulations to appropriately account for Subordinated Debt.

E. Securities Law Issues

1. Subordinated Debt Notes Are Securities

The NCUA continues to believe that any Subordinated Debt Note would be deemed to be a ''security'' for purposes of federal and state securities laws. Section 2(1) of the Securities Act broadly defines the term ''security'' to include, among other things, any:

- Stock;
- Note;
- Bond;
- Debenture;
- Evidence of indebtedness;
- Investment contract; or
- Interest or instrument commonly known as a security.[33]

The U.S. Supreme Court has repeatedly emphasized that the definition of ''security'' is quite broad. In a variety of cases analyzing the boundaries of the definition, the Supreme Court has stressed that the substantive characteristics of the instrument in question and the circumstances surrounding its issuance, rather than the mere name or title of the instrument, are of primary significance in determining whether the instrument, contract or arrangement in question will be deemed a ''security.'' While lower federal courts and some state courts have sometimes taken a more narrow view than the Supreme Court, common factors the courts generally consider in their analysis (particularly in the context of a debt instrument, contract or arrangement) include:

- The terms of the offer;

[32] Regulatory capital treatment is based on the type of credit union issuing Subordinated Debt. As discussed throughout this preamble, a LICU may include Subordinated Debt in its RBC ratio and its Net Worth; a Complex Credit Union that is not a LICU may include Subordinated Debt in its RBC ratio; and a New Credit Union that is not a LICU may use Subordinated Debt to avail itself of various Prompt Corrective Actions.

[33] 15 U.S.C. 77b.

• In particular, the character of the economic inducement being offered to the potential counterparty, and whether the characteristics are consistent with a loan or typical extension of credit, or such that the counterparty would anticipate a potential return on investment in addition to repayment of the obligation and any stated interest;

• The plan of distribution;

• In particular, how the instrument is marketed and to whom it is marketed, and whether the potential counterparties are traditional lenders/providers of credit or investors who would anticipate a potential return on investment in addition to repayment of the obligation and any stated interest; and

• The ''family resemblance'' of the instrument to other instruments or arrangements that have been found to fall within the definition of a ''security,'' rather than having characteristics more akin to a loan or typical extension of credit.

The NCUA's definition of a ''security'' is not as broad on its face as the Securities Act definition, but is generally consistent with the federal definition, relevant case law, and interpretations by the SEC. Section 703.2 of the NCUA's regulations defines the term to include a share, participation, or other interest in property or in an enterprise of the issuer or an obligation of the issuer that:

• Either is represented by an instrument issued in bearer or registered form or, if not represented by an instrument, is registered in books maintained to record transfers by or on behalf of the issuer;

• Is of a type commonly dealt in on securities exchanges or markets or, when represented by an instrument, is commonly recognized in any area in which it is issued or dealt in as a medium for investment; and

• Either is one of a class or series or by its terms is divisible into a class or series of shares, participations, interests, or obligations.[34]

For the foregoing reasons, the Board emphasizes that any issuance of a Subordinated Debt Note by an Issuing Credit Union must be done in accordance with applicable federal and state securities laws. Given the complexity of the securities law framework, any credit union contemplating an offer and sale of Subordinated Debt Notes needs to engage qualified legal counsel to ensure its compliance with securities laws before, during, and after any such offer and sale. The securities law information in this preamble does not constitute, and should not be construed or relied upon as, legal advice to any party.

2. Federal (SEC) Registration of Subordinated Debt Notes

Section 5(a) of the Securities Act expresses a fundamental premise of the federal securities laws—that any offers and sales of securities must be registered with the SEC under the Securities Act, unless an exemption from registration is available.[35] Sections 3 and 4 of the Securities Act outline a variety of exemptions from the registration requirements of Section 5(a).[36] Based on either of two exemptions discussed below, Issuing Credit Unions will be able to offer and sell their Subordinated Debt Notes without registering the offering with the SEC under the Securities Act. Specifically, an Issuing Credit Union should be able to rely on either Section 3(a)(5) of the Securities Act or Rule 506 under Regulation D promulgated under Section 4(a)(2) of the Securities Act.

Section 3(a) of the Securities Act provides a series of exemptions from Securities Act registration based on the character of the securities being offered, without regard to the nature of the offering or the nature of the purchasers in the offering. That is, the exemption applies to offerings:

• Conducted as public offerings or as private placements or a mix of the two;

• Made to investors that are institutions, individuals, or both; and

• Made to investors whether or not the investors meet one or more standards such as ''accredited investors'' or ''qualified institutional buyers,'' as each such term is defined in SEC regulations.

Relevant to credit unions, section 3(a)(5) of the Securities Act, in relevant portion, exempts securities that are issued ''by a savings and loan association, building and loan association, cooperative bank, homestead association, or similar institution, which is supervised and examined by State or Federal authority having supervision over any such institution.'' The Board anticipates that nearly all Issuing Credit Unions would rely on this exemption from the registration requirements in the Securities Act.

The Board notes that, in addition to the exemption in Section 3(a)(5), Section 4(a) of the Securities Act provides certain exemptions based on the nature of the securities transaction and the persons involved in the transaction. In particular, Section 4(a)(2) provides certain exemptions (and authorizes the SEC to adopt related rules) based on the nature of the offering and the character of the offerees and purchasers of the securities, without regard to the character of the securities. That is, the exemptions apply to offerings of:

• Equity securities, including common and preferred stock and options, warrants, rights and other derivative securities;

• Debt securities, including bonds, notes and debentures; and

• Hybrid securities, including convertible securities.

Rule 506 of Regulation D, which was adopted by the SEC under Section 4(a)(2) of the Securities Act, provides the specific requirements of one form of what is commonly referred to as the ''private placement'' exemption. Under Regulation D, Rule 506, registration under the Securities Act is not required for offerings that are either (i) not made via any means of general solicitation or advertisement and where the number of purchasers who are not ''accredited investors'' is limited to no more than 35, or (ii) made via general solicitation or advertisement but where all purchasers are ''accredited investors''.

Given the time and costs associated with offering and selling SEC-registered securities, the Board recognizes that many Issuing Credit Unions may avail themselves of an exemption from the registration requirements of Section 5(a) of the Securities Act. Under this proposed rule, the Board would not mandate a specific exemption on which an Issuing Credit Union could or should rely. An Issuing Credit Union should consult with its securities counsel in determining the appropriate exemption upon which to rely.

As discussed more fully in sections II.(C)(6) and (8) of this preamble, however, the Board is proposing to adopt a regulatory framework for the offer, issuance, and sale of Subordinated Debt Notes. This framework is independent of any available exemptions from the registration requirements of Section 5(a) of the Securities Act. It also generally aligns with certain disclosure requirements in the OCC's subordinated debt regulations. For example, the Board is proposing that every planned issuance of Subordinated Debt Notes would require an Issuing Credit Union to prepare and deliver an Offering Document to potential investors even though there are no SEC-mandated disclosure requirements for offerings of securities pursuant to the Section 3(a)(5) exemption, and there generally are no SEC-mandated disclosure requirements

[34] 12 CFR 703.2.

[35] 15 U.S.C. 77e.

[36] *Id.* 77c and 77d.

for offerings of securities pursuant to the Rule 506 private placement exemption as long as all purchasers in the offering are ''accredited investors.''

The Board believes that adopting this regulatory framework would benefit both Issuing Credit Unions and investors, as the framework would provide potential investors information that is important to making a decision to invest in Subordinated Debt Notes and would clearly define the obligations of the related Issuing Credit Unions. These are important benefits that can reduce the possibility of investor confusion or misunderstandings and can assist an Issuing Credit Union in defending against claims by investors that they had a different understanding about the Issuing Credit Union, the terms of the offering, or the securities based on statements made by the Issuing Credit Union or its agents.

Finally, the Board notes that the OCC also applies a regulatory framework to the offer, sale, and issuance of subordinated debt securities. The OCC's subordinated debt regulations require banks to comply with the OCC's registration requirements or otherwise qualify for an exemption under part 16 of those regulations. In particular, the OCC requires that any offers and sales of nonconvertible subordinated debt securities be made only to ''accredited investors'' and only after offering materials have been provided to potential investors.

3. State Registration of Subordinated Debt Notes

Each state has its own securities laws and regulations and regulators charged with the duty of enforcing those laws and regulations. The states have general authority to regulate securities offerings and related matters occurring within or affecting their states. However, the federal securities laws include a number of provisions that substantially limit or completely preempt certain types of state regulation.

Section 18 of the Securities Act [37] provides that securities that meet the definition of ''covered securities'' are not subject to any form of substantive state securities regulation. States do retain authority to pursue fraud-based enforcement claims and the ability, under some circumstances, to require issuers to submit notice filings to the state, which allows the state to collect a filing fee.

Securities that fall within the Section 3(a)(5) exemption, as well as securities issued in an exempt offering under Regulation D, Rule 506, both meet the definition of ''covered securities.'' As a result, in connection with any Subordinated Debt Notes offerings by Issuing Credit Unions that comply with the requirements of Section 3(a)(5) or Regulation D, Rule 506, state securities regulators will not be permitted to:

- Impose any registration, qualification or pre-clearance requirements on the issuer, the terms of the offering or the securities being offered;
- Assess the merits of the issuer, the terms of the offering or the securities being offered; or
- Require the delivery of any disclosure to potential purchasers of the securities in connection with the offering.

4. Disclosure Requirements and Anti-Fraud Provisions

Although Section 3(a)(5) and Regulation D, Rule 506 provide exemptions from the registration requirements of the Securities Act, and reliance on those exemptions is not conditioned on the delivery of any required disclosure to potential investors (in the case of the traditional Rule 506 private placement under Rule 506(b), as long as all the investors are ''accredited''), the marketing and sale of the securities remain subject to the broad anti-fraud prohibitions of the Securities Exchange Act of 1934, as amended (Exchange Act).

The Exchange Act's general anti-fraud prohibitions are embodied in § 10(b), which generally prohibits the use of manipulative or deceptive devices or contrivances that violate SEC rules in connection with the purchase or sale of securities.[38] Most of the litigation brought with respect to the rules promulgated under § 10(b) has been brought under the general anti-fraud provision, Rule 10b–5, which provides as follows:

> It shall be unlawful for any person, directly or indirectly, by the use of any means or instrumentality of interstate commerce, or of the mails or of any facility of any national securities exchange,
>
> (a) to employ any device, scheme, or artifice to defraud,
>
> (b) to make any untrue statement of a material fact or to omit to state a material fact necessary in order to make the statements made, in the light of the circumstances under which they were made, not misleading, or
>
> (c) to engage in any act, practice, or course of business which operates or would operate as a fraud or deceit upon any person, in connection with the purchase or sale of any security.[39]

The primary intent of Rule 10b–5 (and, more broadly, the anti-fraud provisions of the Securities Act and the Exchange Act) is to prevent fraud, deceit, and incorrect or misleading statements or omissions in the offering, purchase and sale of securities. Given that intent, clear and complete disclosure is the critical factor in ensuring the anti-fraud provisions of the Securities Act and Exchange Act are not breached in any offering of securities, regardless of whether the offering is registered with the SEC under the Securities Act or exempt from registration.

In the absence of SEC-mandated disclosure delivery requirements, the practical concern for Issuing Credit Unions relying on either the Section 3(a)(5) or Regulation D, Rule 506 exemption is determining what type and amount of disclosure is appropriate to meet the anti-fraud standards. Relevant case law suggests that the type and amount of disclosure varies depending on a number of surrounding facts and circumstances, including:

- The nature of the potential investors (focusing on their level of sophistication);
- The nature of the security being offered (disclosure regarding the terms of debt instruments, preferred stock or more complex securities tends to be more detailed than disclosure regarding common stock);
- The nature of the business of the issuer and the industry in which the issuer operates (detailed disclosure may be more appropriate in the case of complex business structures and industries); and
- Market practices (focusing on the types of disclosure commonly provided by peer companies).

There are a number of advantages in using a well-written disclosure document in connection with any offering of securities. First, using a disclosure document provides both the issuer and potential investors with a centralized resource clearly and consistently setting forth the terms of the offering and the securities being offered. Second, the disclosure document can be used as a reference to reduce the possibility of investor confusion or misunderstandings and can be used by the issuer as a defense against claims by investors that they had a different understanding about the issuer, the terms of the offering, or the securities based on statements made by the issuer or its agents. For these reasons, the Board is proposing that every planned issuance of Subordinated Debt Notes would require the preparation and delivery of a written

[37] 15 U.S.C. 77r.

[38] 17 CFR 240.10b–5.

[39] *Id.*

disclosure document, each of which must meet the standards of Rule 10b–5.

In brief, for any disclosure document to meet the standards of Rule 10b–5, the disclosure included in the document (a) must not contain any untrue statement of a material fact and (b) must not omit to state a material fact the absence of which renders any disclosure already being made misleading. To accomplish those ends, the disclosure must be clear, accurate, and verifiable. In addition, the disclosure should cover topics that are typically important to investors in making an investment decision. Common topics in this category include:

- Material risks relating to the issuer and the industry in which the issuer operates;
- Material risks relating to the security being offered;
- The issuer's planned uses for the proceeds of the offering;
- Regulatory matters impacting the issuer and its operations;
- Tax issues associated with the security being offered; and
- How the securities are being offered and sold, including any conditions to be met in order to complete the offering.

Sections 702.405, 702.406, and 702.408 of the proposed rule detail the Offering Document requirements for a planned issuance of Subordinated Debt Notes. These requirements are independent of and, in some cases, additive to any requirements imposed by applicable securities laws. The Board reiterates its expectation that credit unions contemplating an issuance of Subordinated Debt Notes retain professional advisors experienced in securities law disclosure matters to assist them in the preparation of related Offering Documents.

Beyond the disclosure topics outlined above, a credit union considering issuing Subordinated Debt Notes may obtain guidance as to the type and amount of disclosure that is appropriate for its securities offerings from market participants. Sophisticated investors, rating agencies, underwriters, placement agents, and others often exert significant influence over disclosure practices in exempt securities offerings. In some settings, such as municipal bond offerings and offerings under Securities Act Rule 144A [40] (made to highly sophisticated ''qualified institutional buyers''), it is not uncommon for disclosure documents to approach the level of detail that typically would be provided in a registration statement for an offering registered with the SEC under the Securities Act.

[40] 17 CFR 230.144A.

5. Ongoing Disclosure and Reporting to Investors; Investor Relations

As discussed in this preamble, the SEC does not mandate any specific disclosure, either in form or substance, with respect to offers and sales of securities under the Section 3(a)(5) exemption or the Regulation D, Rule 506 exemption (if sales are made only to ''accredited investors;'' sales to other investors do require the issuer to deliver specific types of disclosure). Similarly, SEC rules do not require companies that have relied on those exemptions to distribute or make available any disclosure after the offering has been completed or at any time in the future. As noted above, the preemptive effect of Section 18 of the Securities Act prohibits states from requiring any ongoing disclosure to investors following completion of an offering of ''covered securities.''

It is often the case, however, that investors will require that the issuer provide some form of ongoing disclosure. Securities purchase agreements, or companion ''investor rights agreements,'' often specify the form and content of the ongoing disclosure and the frequency of delivery of the disclosure. Practice varies from a requirement to deliver quarterly and annual financial statements to disclosure in form and substance that mimics the disclosure an SEC-registered company would be required to provide to its investors. In addition, for issuances of debt securities under an indenture or an issuing and paying agent agreement, the terms of those documents commonly include requirements to provide certain information to the trustee or paying agent on an ongoing basis, and that information is either passed on directly to investors or is generally available to investors by request to the trustee or paying agent.

Even in the absence of mandated or contractual requirements to provide disclosure, Issuing Credit Unions issuing Subordinated Debt Notes will likely face a variety of practical, disclosure-related issues. For example, investors frequently contact companies in which they hold an interest and ask for a variety of information about the company, its operations, its financial performance, and its prospects. While an Issuing Credit Union may prefer not to respond to those inquiries, from an investor relations standpoint, refusing to respond is not likely to be practical. Although this places certain burdens on an Issuing Credit Union's management, maintaining open lines of communication with investors can have significant practical benefits, including assessing possible interest in future offerings of Subordinated Debt Notes, negotiating possible buybacks of outstanding Subordinated Debt Notes, or negotiating amendments or modifications to obligations relating to any currently outstanding Subordinated Debt Notes.

From a securities law standpoint, the type of information an Issuing Credit Union provides—and whether that information is provided only to the requesting investor, to all investors, or the marketplace—generally raises a number of important issues. First, any information that is provided must be materially correct and complete, because the anti-fraud provisions of the securities laws could apply to those communications if an investor or potential investor relies on those communications in connection with the purchase or sale of a security. In addition, sharing material, non-public information with individual investors without making that information generally available to all investors could result in potential liability for the Issuing Credit Union.

As a result, for securities law compliance and risk management purposes, under the proposed rule, Issuing Credit Unions issuing Subordinated Debt Notes must adopt policies and procedures covering matters such as:

- Who is responsible and authorized to speak on behalf of the Issuing Credit Union;
- What information will and will not be provided to requesting investors;
- Whether that information will be made available to other investors; and
- How that information will be made available to other investors.

Although an Issuing Credit Union may not need to have full-time personnel dedicated to an investor relations function, some personnel will need to take on responsibility for investor relations, and will need to be prepared to accurately answer questions and respond to appropriate requests. In addition, the responsible personnel will need to be trained regarding appropriate boundaries for responses to and discussions with investors. As noted above, there are a variety of securities law issues relating to communications with investors. As a result, for securities law compliance and risk management purposes, Issuing Credit Unions issuing Subordinated Debt Notes will need to adopt certain policies and procedures covering interactions with investors.

Finally, similar to commercial loans, lines of credit, and other types of debt financing, the debt security instrument

itself and/or the documents relating to debt securities issuances (for example, note purchase agreement, indenture, issuing and paying agent agreement) customarily require the issuer of debt securities to report its compliance (or non-compliance) with any covenants included in the terms of the debt securities. The frequency of reporting and the contents of the report can vary from situation to situation, based both on the demands of the investors and the term structure of the particular debt security. These obligations will make it necessary for the Issuing Credit Union to implement compliance and reporting controls and procedures to ensure compliance with the terms of the Subordinated Debt Notes generally, and for compliance with any applicable reporting requirements.

6. Potential Broker-Dealer Registration Issues

Marketing activities by an Issuing Credit Union and its employees in connection with any offerings of Subordinated Debt Notes could require the employees to register as broker-dealers because the SEC interprets the definition of ''broker'' broadly to cover persons who play almost any active role in offers and sales of securities, including, under certain circumstances, employees of the issuer of the securities or its affiliates.

There are exemptions available to both an Issuing Credit Union itself and its employees that can excuse them from the broker-dealer registration requirements. Credit unions that issue securities typically cannot be ''brokers'' of their own securities because they are not involved in the purchase or sale of securities for the account of other persons. Similarly, credit unions that issue securities typically cannot be ''dealers,'' because their normal business does not involve buying and selling their own securities for their own account. Credit union employees that participate in offering-related activities usually will be able to rely on the exemption provided by Rule 3a4–1 under the Exchange Act.[41] Conditions to relying on this exemption include the employee:

- Not receiving commissions or other compensation relating to the offering;
- Not being disqualified under SEC rules due to past legal or regulatory issues;
- Not being associated with a broker or dealer during the offering; and
- Either limiting his or her offering-related activities, limiting the types of potential investors he or she interacts with, or limiting the number of offerings he or she participates in.

As a result, for securities law compliance and risk management purposes, discussed further in section II(C)(8) of this preamble, Issuing Credit Unions must adopt certain policies and procedures covering compliance with broker-dealer requirements.

7. Director and Officer (''D&O'') Liability Insurance Coverage for Issuing Credit Unions

Under the proposed rule, Issuing Credit Unions considering issuing Subordinated Debt Notes will need to evaluate the potential impact of those activities on their D&O coverage. The scope of D&O liability coverage, amount of premiums, and terms relating to retention (deductibles and self-insurance) are usually different for public companies versus private companies. While Issuing Credit Unions will not be ''public'' in the same way SEC-registered entities with securities traded on an exchange are, entities that begin issuing securities to more than a limited number of ''outside'' investors must often make adjustments to their existing D&O policies.

For the reasons identified in subsections I. (E)(5), (6), and (7) above, the Board is proposing to require a credit union to include draft written policies on these issues as part of its application to issue Subordinated Debt Notes. See section II. (C)(8) of this preamble for a more detailed discussion of the application requirements.

II. Proposed Changes

The following is a section-by-section analysis of the proposed changes. The Board invites comment on each proposed change and, where appropriate, has posed questions to solicit specific feedback on discrete aspects of the proposed rule. The Board notes that all references in this preamble to part 702 of the NCUA's regulations, including any subsection thereof, refer to the version of part 702 that gives effect to the final RBC Rule and which will become effective on January 1, 2022.

A. Part 701—Organization and Operations of Federal Credit Unions

1. § 701.25 Loans to Credit Unions

The Board proposes to add a new § 701.25 for FCUs making loans to other credit unions. This section will only apply to natural person credit unions; corporate credit union lending is subject to § 704.7.[42] While this section applies to FCUs, FISCUs will be subject to these requirements and limitation through the proposed § 741.227 as discussed in section II. (E)(3) of this preamble. Loans from FCUs to other credit unions are not currently addressed in the NCUA's regulations. The Board believes adding a new section for loans to credit unions will establish policy standards and limits to support safety and soundness and protect the NCUSIF.

The loans to other credit unions section includes the following FCU activities:[43]

- Loans not subordinate to the NCUSIF or to a private insurer (for privately insured credit unions);
- Subordinated Debt;
- Grandfathered Secondary Capital; and
- Loans or obligations subordinate to a private insurer (for privately insured credit unions).

Specifically, the proposed § 701.25 will establish:

- Limits on loans an FCU makes to other credit unions;
- Approval and policy standards for an FCU to make loans to other credit unions; and
- Requirements and limits on an FCU making investments in Subordinated Debt.

The Board proposes § 701.25(a) to establish aggregate and single borrower limits for loans, including investments in Subordinated Debt, an FCU can make to other credit unions. The proposed aggregate limit is the same as the limit in the FCU Act on an FCU's authority to invest its funds in loans to other credit unions.[44] The single borrower limit is consistent with the single borrower limit in § 723.4(c) for commercial loans.

The Board notes that the FCU Act imposes an aggregate limit on the amount of loans an FCU may make to other credit unions. Specifically, the FCU Act authorizes an FCU to make loans to other credit unions that, in the aggregate, cannot exceed 25 percent of the FCU's paid-in and unimpaired capital and surplus.[45] Paid-in and unimpaired capital and surplus is defined in NCUA regulations as:

> [S]hares plus post-closing, undivided earnings. This does not include regular reserves or special reserves required by law, regulation or special agreement between the

[41] 17 CFR 240.3a4–1.

[42] The NCUA is evaluating a potential proposed rule to clarify the extent to which corporate credit unions could purchase Subordinated Debt issued by natural person credit unions.

[43] These requirements do not apply to natural person credit union investments in contributed capital of corporate credit unions, which is limited by 12 CFR 703.14(b).

[44] 12 U.S.C. 1757(7)(C).

[45] *Id.*

credit union and its regulator or share insurer.[46]

The proposed aggregate limit in this section, therefore, is not a substantive change, but a regulatory codification of the limit imposed by the FCU Act. The Board believes the proposed rule would clarify loan limits in this section and minimize the need for readers to reference the FCU Act when determining aggregate limits for loans to credit unions.

The Board is proposing a new single borrower limit for FCUs making loans to other credit unions that would be the greater of 15 percent of the FCU's Net Worth or $100,000, plus an additional 10 percent of the FCU's Net Worth if that amount is fully secured at all times with a perfected security interest by readily marketable collateral as defined in § 723.2. There is no current single credit union borrower limit in the NCUA's regulations. The Board notes that the proposed single borrower limit is consistent with the single borrower limit in the NCUA's commercial lending and MBL rule.[47] Because credit unions share many similarities with traditional corporate borrowers, the Board believes that basing the proposed single borrower limit in this rule on the commercial and MBL rule limit is appropriate. Furthermore, the 15 percent of Net Worth single borrower limit for FCUs making loans to other credit unions would generally limit catastrophic losses to an FCU if the borrower defaults. The proposed 15 percent of Net Worth threshold is also consistent with the longstanding FDIC single-obligor limit.[48] The Board would like to note that it is also considering a similar single obligor limit for uninsured deposits in future rulemakings.

The Board proposes § 701.25(b) to establish minimum approval and written policy standards for an FCU that is making loans to credit unions. The proposal would require that an FCU's board of directors approve all loans to other credit unions. The Board notes that the FCU Act already requires an FCU's board of directors to approve all loans to credit unions and, as such, this proposed requirement is not new.[49]

The proposed rule also requires an FCU lending to another credit union to establish written policies that address how it would manage the risk of its loans to credit unions and the dollar limits, both aggregate and single borrower, on the amount of the loans. This would be a new requirement for FCUs making loans to other credit unions.

The Board is proposing to add this requirement because it believes that making loans to credit unions should have similar policy requirements as other loans and investments. The Board also believes written policies can help ensure FCU lending to other credit unions will operate in a safe and sound manner. Policies create a framework for a credit union to consistently perform credit analysis and creates limits that are consistent with the credit union's risk tolerance and regulatory limits to help ensure the credit union is operating in a safe and sound manner.

The Board believes that FCUs that make loans to other natural person credit unions may have traditionally included policies for this activity in their investment or loan policies. The Board believes including policies for loans to other credit unions in the investment policy or a loan policy is sufficient for compliance with this requirement, since the Board's concern is with the existence of sufficient policies, not where they reside.

The Board is proposing § 701.25(c) to establish minimum requirements and limits for an FCU that invests in Subordinated Debt, Grandfathered Secondary Capital or in loans and obligations issued by privately insured credit unions that are subordinate to a private insurer (PICU Subordinated Debt). The minimum requirements apply to both direct and indirect investments.

A *direct investment* would have the issuer of the Subordinated Debt as the borrower on the investing credit union's balance sheet. For example, credit union A purchases Subordinated Debt from credit union B. This results in credit union A having risk exposure (credit risk) to credit union B through its holding of the Subordinated Debt note.

An *indirect investment* is one in which the issuer of the Subordinated Debt is not identifiable on the investing credit union's balance sheet. An example of an indirect investment would be the purchase of shares in a mutual fund. For example, XYZ mutual fund purchases Subordinated Debt issued by credit union B. If credit union A purchases shares in this mutual fund, then credit union A would have an indirect investment in credit union B's Subordinated Debt, because only XYZ mutual fund would be recorded on credit union A's balance sheet.

The Board is proposing that an FCU must meet three criteria to make direct or indirect investments in Subordinated Debt, Grandfathered Secondary Capital or PICU Subordinated Debt. Specifically, the investing FCU:

- Has, at the time of the investment, a capital classification of ''Well Capitalized;''
- Does not have any outstanding Subordinated Debt or Grandfathered Secondary Capital with respect to which it was the Issuing Credit Union; and
- Is not eligible to issue Subordinated Debt or Grandfathered Secondary Capital pursuant to an unexpired approval from the NCUA.

The Board is proposing the ''Well Capitalized'' capital classification requirement because it believes that only ''Well Capitalized'' FCUs should invest in obligations of natural person credit unions that are subordinate to the NCUSIF or to a private insurer. Because any of the aforementioned subordinated obligations are in a first loss position, even before the NCUSIF or a private insurer, an involuntary liquidation of the related Issuing Credit Union or significant write-downs of the subordinated obligations would potentially mean large, and likely total, losses for the holders of those subordinated obligations. Therefore, the Board believes it would not be safe and sound to allow FCUs that are classified less than ''Well Capitalized'' to invest in Subordinated Debt, Grandfathered Secondary Capital or PICU Subordinated Debt.

Conversely, the Board believes that a ''Well Capitalized'' FCU generally has sufficient Net Worth to invest in Subordinated Debt, Grandfathered Secondary Capital or PICU Subordinated Debt, provided that the risk is limited as discussed further in this section of the preamble.

The Board is also proposing that an FCU investing in Subordinated Debt, Grandfathered Secondary Capital, or PICU Subordinated Debt must not be an Issuing Credit Union of Subordinated Debt or Grandfathered Secondary Capital, or currently have approval from the NCUA to issue Subordinated Debt or Grandfathered Secondary Capital. The Board notes that an FCU would not be considered an Issuing Credit Union if it acquired Subordinated Debt or Grandfathered Secondary Capital issuance through a merger, as discussed further in section II. (C)(3) of this preamble. The Board believes that an Issuing Credit Union should not provide Regulatory Capital to other natural person credit unions. Furthermore, the potential to transmit losses between multiple Issuing Credit Unions that have both issued Subordinated Debt and invested in Subordinated Debt (loss transmission) could increase the risk of credit union failure and increase the

[46] 12 CFR part 700.

[47] *Id.* 723.4(c).

[48] *Id.* 32.3(a).

[49] 12 U.S.C. 1757(5)(C).

risk to the NCUSIF. For example, if an Issuing Credit Union both purchased and issued Subordinated Debt, losses from the Subordinated Debt *purchased* by the Issuing Credit Union could create losses on the Subordinated Debt *issued* by the Issuing Credit Union, thereby creating a potential loss transmission from the purchased Subordinated Debt to the issued Subordinated Debt. The Board is concerned that, if it does not restrict covered credit unions in this way, a loss incurred by an Issuing Credit Union would simultaneously transmit to an investing credit union (the credit union that is the purchaser of the issuer's Subordinated Debt Note). This inter credit union exposure results in an imprudent transmission of losses because a single loss can impact both institutions rather than the issuer alone. The Board believes that failing to prohibit inter credit union subordinated debt transactions will create an unsafe and unsound condition for the NCUSIF.

Beyond loss transmission, if the Board were to allow Issuing Credit Unions to invest in Subordinated Debt, the level of Net Worth in the credit union system could appear to increase, while the actual loss-absorbing capacity of the system would remain unchanged. For example, two LICUs each have $10 million in Net Worth, so the total Net Worth between the two credit unions is $20 million. If each credit union issued $1 million in Subordinated Debt and then sold it to the other, the Net Worth between the two credit unions would be $22 million. This would result in an artificial $2 million increase (ten percent) in Net Worth for the credit union system, and would increase potential loss transmission between the two credit unions as explained in the prior paragraph. The Board notes the increased total Net Worth in the system described above would also happen if only one credit union issued the Subordinated Debt and the other credit union purchased it, also artificially increasing the Net Worth in the system.

The Board is proposing limits on the amount of investment an FCU can make in Subordinated Debt, Grandfathered Secondary Capital, or PICU Subordinated Debt. The proposed limit is only on an aggregate basis, because single borrower limits have been addressed in the proposed general single credit union borrower limit. The Board is proposing an aggregate limit of the lesser of 25 percent of Net Worth and any amount of Net Worth in excess of 7 percent of total assets.

The Board believes a cap of 25 percent of Net Worth is appropriate given the higher relative risk of loss with Subordinated Debt, Grandfathered Secondary Capital, or PICU Subordinated Debt. This risk comes from the Subordinated Debt, Grandfathered Secondary Capital, or PICU Subordinated Debt being in a position to incur losses before the NCUSIF or a private insurer. In other words, the Subordinated Debt and Grandfathered Secondary Capital will take losses after retained earnings before the NCUSIF. The loss profile of Subordinated Debt and Grandfathered Secondary Capital would also apply to PICU Subordinated Debt.

Past loss experience in credit union involuntary liquidations shows that it is not unusual for the NCUSIF to take losses in a liquidation. Any loss to the NCUSIF in a liquidation would result in a total loss of the Subordinated Debt and Grandfathered Secondary Capital. The risk for PICU Subordinated Debt would be similar to Subordinated Debt and Grandfathered Secondary Capital if a private insurer takes losses.

The Board believes the severity of the potential loss warrants an aggregate limit on Subordinated Debt, Grandfathered Secondary Capital, and PICU Subordinated Debt of 25 percent of Net Worth. The Board also contemplated aggregate limits of 15 percent and 40 percent of Net Worth, but believes an aggregate limit of 25 percent of Net Worth strikes an appropriate balance between granting FCUs flexibility to invest, and the risks associated with Subordinated Debt, Grandfathered Secondary Capital, or PICU Subordinated Debt. The Board requests specific comment on whether the NCUA should consider a different aggregate limit, such as 15 percent of an FCU's Net Worth or 40 percent of Net Worth. The Board notes that this limit does not apply to natural person credit union investments in contributed capital of corporate credit unions, which is limited by § 703.14(b).

The Board is also proposing another measure of the aggregate limit, which could further restrict the amount of an FCU's investments in Subordinated Debt, Grandfathered Secondary Capital, and PICU Subordinated Debt. This limit is the amount of Net Worth in excess of seven percent of total assets. An FCU would calculate the amount of Net Worth in excess of 7 percent and would use this measure as the aggregate limit if it is an amount less than 25 percent of its Net Worth.

The Board is proposing the aforementioned limit to ensure that total potential losses from Subordinated Debt, Grandfathered Secondary Capital, or PICU Subordinated Debt would not lower an FCU's Net Worth to below seven percent, which is ''Well Capitalized'' when measuring using the Net Worth Ratio. As mentioned earlier, the Board believes this is an important measure to promote safety and soundness when an FCU invests in Subordinated Debt, Grandfathered Secondary Capital, or PICU Subordinated Debt.

Examples of the aggregate limit calculations are provided below.

ABC FCU HAS $100 MILLION IN NET WORTH AND $1 BILLION IN ASSETS

Limit type	Limit calculation	Total (million)
Percent of Net Worth Limit	25 percent of $100 million (Net Worth)	$25.
Amount of Net Worth in excess of 7%	$100 million (Net Worth) minus [$1 billion (current assets) times 7%].	30.
Maximum amount of Subordinated Debt, Grandfathered Secondary Capital, and PICU Subordinated Debt ABC FCU invest in.	Lesser of the calculations	*25.*

In the above example, the percentage of Net Worth limit is the lesser of the measures and therefore is the binding constraint.

LMN FCU HAS $80 MILLION IN NET WORTH AND $1 BILLION IN ASSETS

Limit type	Limit calculation	Total (million)
Percent of Net Worth Limit	25 percent of $80 million (Net Worth)	$20.
Amount of Net Worth in excess of 7%	$80 million (Net Worth) minus [$1 billion (current assets) times 7%].	10.
Maximum amount of Subordinated Debt, Grandfathered Secondary Capital, and PICU Subordinated Debt ABC FCU invest in.	Lesser of the calculations	*10.*

In the above example, the amount of Net Worth in excess of seven percent limit is the lesser of the measures and therefore is the binding constraint.

The Board is proposing a paragraph that would prescribe how the components of the aggregate limit are calculated. The limit is based on an FCU's aggregate outstanding:

- Investment in Subordinated Debt;
- Investment in Grandfathered Secondary Capital;
- Investment in PICU Subordinated Debt; and
- Loans or portion of loans made by the credit union that are secured by any Subordinated Debt, Grandfathered Secondary Capital, or PICU Subordinated Debt.

The Board is proposing this paragraph to ensure FCUs are more readily aware of the components that are subject to the aggregate limit in this section. In proposing to include loans, or portions of loans, secured by the first three components, the Board is including an exposure that could otherwise be unaccounted for by the lending credit union if the secured borrower defaults.

The Board is proposing a paragraph for the calculation of an FCU's indirect investment in Subordinated Debt, Grandfathered Secondary Capital, or PICU Subordinated Debt. The Board is proposing this paragraph to ensure FCUs consistently measure indirect investment exposure. The credit union would be required to determine the percentage of a mutual fund's assets invested in such instruments and multiple that percentage by its own pro rata investment. This will ensure the credit union has an accurate evaluation of its indirect exposure to Subordinated Debt, Grandfathered Secondary Capital and PICU Subordinated Debt. In turn, this evaluation can be used to monitor compliance with the aggregate regulatory limit on such instruments. This calculation is similar to the full look-through approach for investment funds in Appendix A of the RBC Rule. An example of the calculation follows:

ABC Fund is a $100 million fund and has $5 million of its holdings in Grandfathered Secondary Capital. XYZ FCU owns $10 million of ABC Fund.

- XYZ FCU's proportional ownership of the ABC Fund: $10 million divided by $100 million equals ten percent of the fund.
- Indirect exposure: $5 million (Grandfathered Secondary Capital) in ABC Fund times ten percent equals $500,000.

In the example above, XYZ FCU's indirect exposure, for aggregate limit calculation purposes, would be $500,000. This is the amount that would need to be included in the calculation of the aggregate limit.

2. § 701.34 Designation of Low-Income Status

The Current Secondary Capital Rule contains information on how a credit union can obtain a low-income designation and the procedures and regulations related to secondary capital. As discussed in section II. (C)(1) of this preamble, under this proposed rule, secondary capital and Subordinated Debt would be subject to nearly identical rules. As such, for ease of use, the Board is proposing to locate all regulations related to Subordinated Debt in proposed subpart D of part 702.

To accomplish this, the Board is proposing to delete subsections (b) through (d) and the appendix to the Current Secondary Capital Rule. (Subsection (a) of the Current Secondary Capital Rule would remain in place.) As discussed below, the Board is proposing to relocate subsections (b)–(d) to § 702.414 of proposed subpart D to part 702. The Board believes having one part that addresses capital and capital treatment will help users more easily review all related requirements, including Grandfathered Secondary Capital and Subordinated Debt provisions.

3. § 701.38 Borrowed Funds

The Board is proposing to revise an FCU's borrowing authority under § 701.38 to permit borrowing from any source. This is a change from the current rule, which only addresses an FCU's borrowings from ''natural persons.'' The Board is proposing to revise the current rule to clarify that an FCU may borrow from any source. This change is consistent with section 1757(9) of the FCU Act and, in the Board's view, supports an FCU's legal authority to issue Subordinated Debt Notes.[50]

The Board also is proposing other clarifying revisions to § 701.38(a). Under the proposed rule, an FCU's borrowings would be evidenced by a ''written contract,'' as opposed to the more narrow language of current § 701.38(a), which provides that a borrowing must be evidenced by ''a promissory note.'' The Board recognizes that, under current practice, borrowing contracts may take forms other than just a promissory note. The proposal still cites a promissory note as a primary example, but extends greater flexibility than current § 701.38(a) for what is an acceptable form of evidencing the borrowing.

The Board is also proposing to revise § 701.38(a)(2) to introduce the term ''funds'' to modify the description of a borrowing transaction to make it clearer to investors that such transactions are not shares of the Issuing Credit Union and, therefore, are not insured by the NCUA. The Board regards both of these changes as important clarifications that will benefit credit unions and investors.

Lastly, the Board is proposing to revise § 701.38(b) to reference the limitations on an FCU's maximum borrowing authority by citing section 1757(9) of the FCU Act and removing the current reference to § 741.2 of the NCUA's regulations. However, under § 741.2, a FISCU would be subject to the same borrowing limits as an FCU under § 701.38. This technical refinement supports greater clarity in the regulation but does not change the amount of the limitation that currently applies to FCUs and FISCUs.

[50] *Id.* 1757(9) (FCUs are subject to a maximum borrowing authority ''in an aggregate amount not exceeding, except as authorized by the Board in carrying out the provisions of subchapter III, 50 per centum of its paid-in and unimpaired capital and surplus: Provided, [t]hat any Federal credit union may discount with or sell to any Federal intermediate credit bank any eligible obligations up to the'').

B. Part 702—Capital Adequacy

1. § 702.2 Definitions

The Board is proposing to add an introductory statement to the definitions section to indicate that all accounting terms not otherwise defined in the section will have the same meaning as in U.S. GAAP. The Board is adding this statement to clarify that, if an accounting term is not defined in the rule text, the reader should use any applicable definition provided under U.S. GAAP for that term. This clarifying statement supports the current practice of using U.S. GAAP definitions when an accounting term is undefined by the FCU Act or the NCUA's regulations.

The Board is amending the definition of Net Worth. In the first sentence of the Net Worth definition, the Board is clarifying that the definition of Net Worth in this section is for natural person credit unions and is specifying the measurement of Net Worth is as of the date of determination. The definition in the current rule begins with ''Net worth means,'' and does not explicitly state that the Net Worth definition is for natural person credit unions. The Board is adding this phrasing to avoid the possibility of confusion that the definition of Net Worth could apply to corporate credit unions. The Board is also adding the new qualifier, ''as of any date of determination,'' to clarify that there is an ''as of'' date, which is addressed below.

For clarification, the Board is proposing a technical, non-substantive refinement to the definition of Net Worth in paragraph (1) of current § 702.2 by adding ''most recent'' as a reference point for the date of determination. Current § 702.2 does not explicitly state that Net Worth is measured as of the most recent quarter end, but the Board believes that this reflects the common understanding within the credit union industry.

The Board is also proposing to change the wording regarding how U.S. GAAP is referenced when determining Net Worth from ''as determined under U.S. GAAP'' to ''as determined in accordance with U.S. GAAP.'' The Board believes that this non-substantive revision is more accurate than current § 702.2.

The Board is proposing to amend paragraph (2) in the Net Worth definition to include Subordinated Debt and to replace the term secondary capital accounts with Grandfathered Secondary Capital. It notes that these cohering changes are necessary based on other provisions of the proposed rule discussed throughout this preamble.

The Board is also proposing an addition to paragraph (2) that clarifies the amounts of Subordinated Debt and Grandfathered Secondary Capital that count towards Regulatory Capital.[51] In the current rule, the reader would need to know that secondary capital accounts have a schedule to reduce the recognition of Net Worth once they have a remaining maturity of five years or less. The Board believes that referencing the recognition of Net Worth in §§ 702.407 and 702.414 in the proposal would add clarity in calculating New Worth for LICUs that have issued Subordinated Debt or Grandfathered Secondary Capital. The Board is also proposing some formatting changes in paragraph (2) by adding two subparagraphs, (A) and (B), with text contained in a long paragraph in the current rule. The wording is unchanged except for ''National Credit Union Share Insurance Fund'' being spelled out. The Board is proposing this change to add ease for the reader.

The Board is also adding new definitions for Grandfathered Secondary Capital and Subordinated Debt, as current § 702.2 does not have these definitions. The definition of Grandfathered Secondary Capital is ''any subordinated debt issued in accordance with current § 701.34 (recodified as § 702.414 of subpart D of this part) or, in the case of a FISCU, with § 741.204(c) before the effective date of a final Subordinated Debt regulation. The Board is proposing to add the definition of Grandfathered Secondary Capital as a way to refer to secondary capital issued under the current rule, as discussed in more detail in section II. (C)(14) of this preamble.

Finally, the Board is also proposing to add a definition of Subordinated Debt, which will be the same as the meaning in the proposed subpart D. The definition of Subordinated Debt is ''an Issuing Credit Union's borrowing that meets the requirements of this subpart, including all obligations and contracts related to such borrowing.'' This definition is discussed in more detail in section II. (C)(2) of this preamble. The Board is adding a definition of Subordinated Debt so a reader of the proposed rule text outside of subpart D knows where to find the definition.

2. § 702.104 Risk-Based Capital Ratio

The Board is proposing to amend current § 702.104(b)(1)(vii) to include both Subordinated Debt and Grandfathered Secondary Capital in the RBC Ratio.[52] Current § 702.104(b)(1)(vii) allows secondary capital accounts to be included in the RBC numerator. This change is necessary to properly give effect to Subordinated Debt and Grandfathered Secondary Capital in the RBC Ratio.

The Board is also clarifying that the amount of Subordinated Debt and Grandfathered Secondary Capital that is treated as Regulatory Capital, as discussed in section II. (C)(7) of this preamble, would be included as part of the RBC Ratio. Currently, the definition does not establish how secondary capital would be included in the RBC Ratio, but the Board intended that only the non-discounted portion of secondary capital would count in the RBC Ratio. Therefore, in this proposal, the Board is clarifying that only the portion of Grandfathered Secondary Capital and Subordinated Debt that counts as Regulatory Capital would be included in the RBC Ratio.

Currently, the RBC Rule does not specifically include secondary capital or obligations issued by privately insured credit unions that are subordinate to a private insurer in any risk weighting category. As such, secondary capital and obligations issued by privately insured credit unions that are subordinate to a private insurer would be risk weighted at 100 percent under the ''(a)ll other assets listed on the statement of financial condition not specifically assigned a different risk weight under this subpart'' category.[53]

The Board is proposing to add a new § 702.104(c)(2)(v)(B)(*9*) that would assign a 100 percent risk weight to the exposure amount of natural person credit union Subordinated Debt, Grandfathered Secondary Capital, and loans or obligations issued by privately insured credit unions that are subordinate to a private insurer. The Board notes that this proposed change will not result in a different risk weighting than the RBC Rule requires. Given that Grandfathered Secondary Capital, Subordinated Debt, and obligations issued by privately insured credit unions that are subordinate to a

[51] Regulatory Capital is capital, both Net Worth and/or the RBC numerator, as defined by NCUA. See section II(C)(2) of the preamble for more details.

[52] The RBC Ratio is calculated using a numerator and a denominator. The numerator includes (i) Undivided earnings; (ii) Appropriation for non-conforming investments; (iii) Other reserves; (iv) Equity acquired in merger; (v) Net income; (vi) ALLL, maintained in accordance with U.S. GAAP; (vii) Secondary capital accounts included in net worth (as defined in § 702.2); and (viii) Section 208 assistance included in net worth (as defined in § 702.2) and deductions for (i) NCUSIF Capitalization Deposit; (ii) Goodwill; (iii) Other intangible assets; and (iv) Identified losses not reflected in the RBC Ratio numerator. The denominator includes risk-weighted assets.

[53] 12 CFR 702.104(c)(2)(v)(C).

private insurer are similar instruments that share similar risks, the Board believes it is appropriate to include them in the same risk weighting category.

3. § 702.109 Prompt Corrective Action for ''Critically Undercapitalized'' Credit Unions

Section 216(a)(2) of the FCU Act directs the NCUA to take Prompt Corrective Action (PCA) to resolve the problems of credit unions.[54] The FCU Act indexes various corrective actions to the following five net worth categories:

- Well Capitalized;
- Adequately Capitalized;
- Undercapitalized;
- Significantly Undercapitalized; and
- Critically Undercapitalized.[55]

Credit unions that fail to meet capital measures are subject to increasingly strict limits on their activities. The mandatory and discretionary supervisory actions included in the current RBC Rule aid in accomplishing PCA's purpose and provide a transparent guide of supervisory actions a credit union can expect as its capital declines.

Section 702.109 of the RBC Rule provides for mandatory and discretionary PCA for ''Critically Undercapitalized'' credit unions. Among the discretionary actions in § 702.109 is one related to secondary capital. Specifically, current § 702.109(b) states that, beginning 60 days after the effective date of classification of a credit union as ''Critically Undercapitalized,'' the NCUA may prohibit payments of principal, dividends, or interest on the credit union's uninsured secondary capital accounts established after August 7, 2000, except that unpaid dividends or interest shall continue to accrue under the terms of the account to the extent permitted by law.[56]

The Board is proposing to retain the aforementioned discretionary action for Grandfathered Secondary Capital so as not to impact outstanding secondary capital agreements between LICUs and investors. The Board notes, however, that under this proposal the discretionary action, as discussed above, would be mandatory for Subordinated Debt. With this change, the Board intends to provide investors with certainty. As mentioned in section II. (C)(5) of this preamble, a credit union must disclose this mandatory action to all investors. The Board believes including this as a mandatory action will provide credit unions and investors with clear and transparent regulations regarding the agency's actions in a PCA context regarding Subordinated Debt. The Board notes that the mandatory treatment of this action is also consistent with the OCC's subordinated debt requirements.[57]

4. § 702.205 Prompt Corrective Action for Uncapitalized New Credit Unions

The Board is proposing to make a technical correction to § 702.205 of the RBC Rule by changing the title of this section from ''Mandatory liquidation of uncapitalized New Credit Union'' to ''Discretionary liquidation of uncapitalized New Credit Union.'' The Board notes that the current text of this section states that the NCUA *may* place a New Credit Union into liquidation under section 1787(a)(1)(A) of the FCU Act.[58] Because the term ''may'' is discretionary, this proposed change will better align the title of this section with the accompanying text.

5. § 702.206 Revised Business Plans (RBP) for New Credit Unions

The Board is proposing to delete paragraph (d) of § 702.206 of the RBC Rule, which reads as follows:

> Consideration of regulatory capital. To minimize possible long-term losses to the NCUSIF while the credit union takes steps to become ''Adequately Capitalized'', the NCUA Board shall, in evaluating an RBP under this section, consider the type and amount of any form of regulatory capital which may become established by NCUA regulation, or authorized by state law and recognized by NCUA, which the credit union holds, but which is not included in its net worth.

This section was intended as a placeholder for the eventual creation of a Subordinated Debt rule. As such, the Board is proposing to delete the text in this section and include a new § 702.207 in the RBC Rule related to the consideration of Subordinated Debt for a New Credit Union. The Board addresses this new section in the following section of this preamble.

6. § 702.207 Consideration of Subordinated Debt for New Credit Unions

The Board is proposing a new section that would provide an exception from PCA for a New Credit Union that meets specific conditions related to Subordinated Debt. Specifically, under this section a New Credit Union would not be subject to mandatory and discretionary actions under PCA if the New Credit Union has outstanding Subordinated Debt that would be treated as Regulatory Capital if the credit union were a Complex Credit Union or a LICU. The Board notes that, to qualify for this proposed exception, a New Credit Union would have to have a Net Worth Ratio of at least one percent and issue Subordinated Debt in accordance with the requirements of proposed subpart D.

As discussed in section II. (C)(3) of this preamble, a non-LICU New Credit Union may only issue Subordinated Debt if, at the time of issuance, it has retained earnings of at least one percent of total assets. Further, under this proposal, the NCUA would only consider, for purposes of this exception, the non-discounted portion of any issued Subordinated Debt. Finally, to qualify for this exception, the Board is proposing to require the ratio of the New Credit Union's Net Worth, plus its outstanding Subordinated Debt, to its total assets be at least seven percent.

To avail itself of relief from PCA under this section, a New Credit Union would also be required to increase its Net Worth in a manner consistent with the New Credit Union's approved initial business plan or revised business plan. The Board believes the proposed rule allows a New Credit Union to use Subordinated Debt in a manner that allows the credit union to avoid PCA while maintaining a sufficient buffer between losses and the NCUSIF.

Even if a New Credit Union meets the foregoing criteria, the proposed rule reserves the Board's authority to impose PCA on a New Credit Union in delineated circumstances. These circumstances include where a New Credit Union is operating in an unsafe or unsound manner or has not corrected a material unsafe and unsound condition that it was, or should have been, aware of. However, the Board would only impose PCA in these circumstances after providing a New Credit Union with written notice and opportunity for hearing pursuant to § 747.2003 of the NCUA's regulations.

For FISCUs, the Board is also proposing to include a requirement that the NCUA consult and seek to work cooperatively with the appropriate state supervisory authority (SSA) before invoking the reservation to impose PCA. The Board believes this reservation of rights will allow the NCUA to quickly and appropriately address unsafe or unsound conditions in a New Credit Union, regardless of whether the New Credit Union has issued Subordinated Debt.

In addition, the Board is proposing to prohibit delegation of its authority to take PCA against a New Credit Union that would otherwise qualify for an

[54] 12 U.S.C. 1790d(a)(2).

[55] *Id.* 1790d(c).

[56] 12 CFR 702.109(b)(11).

[57] *Id.* 5.47(d)(3)(ii)(B)(*2*).

[58] 12 U.S.C. 1787(a)(1)(A).

exemption from PCA because of its issuance of Subordinated Debt. The Board is proposing to retain such authority because such action could have a direct and material impact to the NCUSIF and the subject New Credit Union. This proposed non-delegation provision is similar to others related to PCA in the RBC Rule.

The Board is also proposing to include in this section a statement that the NCUA will consider any outstanding Subordinated Debt issued by a New Credit Union in evaluating the credit union's revised business plan. Because Subordinated Debt acts as buffer between losses sustained by a credit union and the NCUSIF, the Board believes this change prudently allows New Credit Unions to avail themselves of the benefits of issuing Subordinated Debt while maintaining the safety and soundness of the NCUSIF.

Finally, the Board is proposing to include a provision that allows the Board to liquidate a New Credit Union under section 1787(a)(3)(A) of the FCU Act, provided that a New Credit Union's Net Worth Ratio *plus* outstanding Subordinated Debt that has been issued by that New Credit Union and that counts as Regulatory Capital is, as of the applicable date of determination, below six percent and the New Credit Union has no reasonable prospect of becoming ''Adequately Capitalized.'' The Board believes it is prudent to include procedures whereby the Board can address a New Credit Union that does not have a reasonable prospect of being ''Adequately Capitalized.''

The Board notes that, while Subordinated Debt can be a helpful tool for credit unions to meet their capital requirements, it believes that a credit union's business model should not rely too heavily on the issuance of Subordinated Debt. As such, this proposed provision supports the Board in fulfilling its statutory mandate of protecting the NCUSIF if a credit union has no reasonable prospect of becoming ''Adequately Capitalized'' without giving effect to any Subordinated Debt issued by that credit union, and is failing to reach even marginal levels of capitalization with Subordinated Debt.

C. Subpart D—Subordinated Debt, Grandfathered Secondary Capital, and Regulatory Capital

1. § 702.401 Purpose and Scope

This proposed section sets out the general purpose of subpart D of part 702. As discussed in more detail below, this section of the proposal also addresses the authority for FISCUs to issue Subordinated Debt and the treatment of Grandfathered Secondary Capital.

With respect to FISCUs, the Board proposes to clarify that the requirements of proposed subpart D of part 702 would apply to FISCUs, but only to the extent FISCUs are permitted by applicable state law or regulation to issue debt securities of the type contemplated by this rule. That is, under this proposal, a FISCU may only issue Subordinated Debt if such issuance is permissible under its applicable state law. To the extent that a FISCU's state law is more restrictive than this proposed rule, the FISCU would be required to follow that state law.

With respect to secondary capital, the Board proposes to address in this section of the proposal both the treatment of outstanding Grandfathered Secondary Capital and the treatment of secondary capital issued in the form of Subordinated Debt after the effective date of a final Subordinated Debt rule.

With respect to any Grandfathered Secondary Capital, the Board is proposing to allow such Grandfathered Secondary Capital to continue to be governed by the regulatory requirements under which it was issued. For ease of reference, the Board is proposing to relocate subsections (b)–(d) and Appendix A of the Current Secondary Capital Rule to a new § 702.414. As discussed in section II. (C)(14) of this preamble, this new section would include all of the requirements in the Current Secondary Capital Rule, but would make clear that LICUs are not permitted to conduct new issuances under proposed § 702.414.

The Board is also proposing to prohibit Grandfathered Secondary Capital from receiving Regulatory Capital treatment as of 20 years from the effective date of a final Subordinated Debt rule. The Board notes that this proposed requirement would prevent Grandfathered Secondary Capital from perpetually receiving such grandfathered treatment. The Board believes 20 years would provide a LICU sufficient time to replace Grandfathered Secondary Capital with Subordinated Debt if such LICU seeks continued Regulatory Capital benefits of Subordinated Debt. The Board believes it is important to strike a balance between transitioning issuers of Grandfathered Secondary Capital to this proposed rule and ensuring that instruments do not indefinitely remain as Grandfathered Secondary Capital. The Board believes the structure of the proposed grandfather provision achieves this balance without unnecessarily disrupting the operations of LICUs, investors, and any outstanding secondary capital agreements.

Finally, the Board is also clarifying that this proposed rule would treat as Subordinated Debt all secondary capital issued after the effective date of a final Subordinated Debt rule. As such, any post-effective date application and/or issuance of secondary capital by a LICU would be subject to the requirements of this rule (except § 702.414, which, as noted above, only applies to Grandfathered Secondary Capital). As discussed above, this change would not alter the ability of a LICU to include Subordinated Debt in its Net Worth, the same way a LICU currently includes secondary capital in its Net Worth.

2. § 702.402 Definitions

This section contains proposed definitions to subpart D of 702. However, subpart D references some terms referenced elsewhere in the regulations. Therefore, for consistency purposes, the Board is proposing to cross-reference definitions of terms found elsewhere in the NCUA's regulations as follows:

Cross-referenced term	Definition
Complex Credit Union	The proposed rule defines the term as having the same meaning as in subpart A of part 702, as amended by the Board on November 6, 2018.[59]
Grandfathered Secondary Capital	The proposed rule defines the term as any subordinated debt issued in accordance with current § 701.34 before [EFFECTIVE DATE OF THE FINAL RULE].
Net Worth	The proposed rule defines the term as having the same meaning as in § 702.2.
Net Worth Ratio	The proposed rule defines the term as having the same meaning as in § 702.2.
New Credit Union	The proposed rule defines the term as having the same meaning as in § 702.201, as amended by the Board on October 29, 2015.[60]

[59] 83 FR 55467. (Nov. 6, 2018).

[60] 80 FR 66625. (Oct. 29, 2015).

Cross-referenced term	Definition
Risk-based Capital (RBC) Ratio	The proposed rule defines the term as having the same meaning as in § 702.2 as amended by the Board on October 29, 2015.[61]

[61] *Id.*

In addition to the cross-referenced terms, the Board is proposing to define the following terms:

Accredited Investor. The proposed rule defines ''Accredited Investor'' as any Natural Person Accredited Investor or any Entity Accredited Investor, as applicable. The Board is aware that the SEC has recently published a proposed rule amending the definition of ''accredited investor.'' The Board will evaluate any final rule issued by the SEC and make changes to a final Subordinated Debt rule accordingly. Such changes may include substituting specific cross references contained in the definitions of Entity Accredited Investor and Natural Person Accredited Investor with a more general cross reference. In addition, the Board may opt to include a reference to sample accredited investor forms, rather than include such form in the rule, as the Board is proposing to do so in § 702.406 of this proposal.

Appropriate Supervision Office. The proposed rule defines the term ''Appropriate Supervision Office'' as, with respect to any credit union, the Regional Office or Office of National Examinations and Supervision that is responsible for supervision of that credit union. By doing so, it provides the Board flexibility in delegating the responsible office, which may change as a reflection of organization changes within the NCUA.

Entity Accredited Investor. The proposed rule defines the term ''Entity Accredited Investor'' as an entity that, at the time of offering and sale of Subordinated Debt to that entity, meets the requirements of 17 CFR 230.501(a)(1), (2), (3), (7), or (8), which generally are the requirements applicable to corporate or trust entities and not natural persons.

Immediate Family Member. The proposed rule defines ''Immediate Family Member'' as a spouse, child, sibling, parent, grandparent, or grandchild (including stepparents, stepchildren, stepsiblings, and adoptive relationships). The proposed term is intended to be consistent with the definition found in the NCUA's regulations.[62]

Issuing Credit Union. For the purposes of this subpart D of part 702, the proposed rule defines ''Issuing Credit Union'' as a credit union that has issued, or is in the process of issuing, Subordinated Debt or Grandfathered Secondary Capital in accordance with the requirements of this proposed rule. The definition is consistent with the term used by OCC's regulations.[63]

Low-Income Designated Credit Union (LICU). The proposed rule defines the term ''Low-Income Credit Union'' as a credit union designated as having low-income status in accordance with § 701.34 of this chapter. This definition is consistent with references to LICUs in the FCU Act as, ''a credit union that serves predominantly low-income members.'' [64]

Natural Person Accredited Investor. The proposed rule defines the term ''Natural Person Accredited Investor'' as a natural person who, at the time of offering and closing of the issuance and sale of Subordinated Debt to that person, meets the requirements of 17 CFR 230.501(a)(5) or (6), which generally are the requirements applicable to natural persons and not corporate or trust entities; *provided* that, for purposes of purchasing or holding any Subordinated Debt Note, this term shall not include any board member or Senior Executive Officer, or any Immediate Family Member of any board member or Senior Executive Officer, of the Issuing Credit Union.

Offering Document. The proposed rule defines the term ''Offering Document'' as the document(s) required by proposed § 702.408, including any term sheet, offering memorandum, private placement memorandum, offering circular, or other similar document used to offer and sell Subordinated Debt Notes.

Pro Forma Financial Statements means projected financial statements that show the effects of proposed transactions as if they actually occurred in a variety of plausible scenarios, including both optimistic and pessimistic assumptions, over measurement horizons that align with the credit union's expected activities. For consistency, this term as defined here is consistent with the *Evaluating Secondary Capital Plans* supervisory guidance issued by the Board on September 16, 2019.[65]

Qualified Counsel. The proposed rule defines the term ''qualified counsel'' as an attorney licensed to practice law in the relevant jurisdiction(s) who has expertise in the areas of federal and state securities laws and debt transactions of the type contemplated by the proposed rule. The Board believes that credit unions need to engage legal counsel that has the requisite experience and expertise to represent the credit union in all aspects of a Subordinated Debt transaction.

Regulatory Capital. The proposed rule defines the term ''Regulatory Capital'' as (i) with respect to an Issuing Credit Union that is a LICU and not a Complex Credit Union, the aggregate outstanding principal amount of Subordinated Debt and, until [DATE 20 YEARS AFTER THE EFFECTIVE DATE OF THE FINAL RULE], Grandfathered Secondary Capital that is included in the credit union's Net Worth Ratio; (ii) with respect to an Issuing Credit Union that is a Complex Credit Union and not a LICU, the aggregate outstanding principal amount of Subordinated Debt that is included in the credit union's RBC Ratio; (iii) with respect to an Issuing Credit Union that is both a LICU and a Complex Credit Union, the aggregate outstanding principal amount of Subordinated Debt and, until [DATE 20 YEARS AFTER THE EFFECTIVE DATE OF THE FINAL RULE], Grandfathered Secondary Capital that is included in its Net Worth Ratio and in its RBC Ratio; and (iv) with respect to a New Credit Union, the aggregate outstanding principal amount of Subordinated Debt and, until [DATE 20 YEARS AFTER THE EFFECTIVE DATE OF THE FINAL RULE], Grandfathered Secondary Capital that is considered pursuant to proposed § 702.207. This definition reflects the expanded eligibility of credit unions that may count Subordinated Debt as Regulatory Capital.

[62] Appendix A to 12 CFR part 701, Article XVIII, § 1.

[63] Office of the Comptroller of the Currency, Comptroller's Licensing Manual: Subordinated Debt (2017), *available at https://www.occ.gov/publications-and-resources/publications/comptrollers-licensing-manual/files/licensing-booklet-subordinated-debt.html.* Per the OCC's Comptroller's Licensing Manual for Subordinated Debt, the bank issuing subordinated debt is referred to as the ''issuing bank.''

[64] 12 U.S.C. 1752(5); 1757a(b)(2)(A),); 1757a(c)(2)(B).

[65] Supervisory Letter No. 19–01, September (Sept. 16, 2019), *available at https://www.ncua.gov/files/supervisory-letters/SL-19-01-evaluating-secondary-capital-plans.pdf.*

Retained Earnings. The proposed rule defines the term ''Retained Earnings'' as in U.S. GAAP. The definition is consistent with the FCU Act, which defines Net Worth, in part, as a credit union's Retained Earnings balance under U.S. GAAP.[66] Additionally, according to section 202 of the FCU Act, a credit union's statement of financial condition is generally to be reported consistent with U.S. GAAP.[67]

Senior Executive Officer. The proposed rule defines the term ''Senior Executive Officer'' as a credit union's chief executive officer (for example, president or treasurer/manager), any assistant chief executive officer (for example, any assistant president, any vice president or any assistant treasurer/manager) and the chief financial officer (controller). The term Senior Executive Officer also includes employees and contractors of an entity, such as a consulting firm, hired to perform the functions of positions covered by the term Senior Executive Officer. For consistency, this term as defined here is consistent with § 701.14(b)(2) of the NCUA's regulations.

Subordinated Debt.[68] The proposed rule would define ''Subordinated Debt'' as an Issuing Credit Union's borrowing that meets the requirements of this proposed rule, including all obligations and contracts related to such borrowing.

3. § 702.403 Eligibility

Currently, § 701.34 allows only LICUs to issue Secondary Capital. The proposed rule increases the current eligibility beyond LICUs in § 701.34(b) to also include Non-LICU Complex Credit Unions and New Credit Unions. The Board is also proposing to grant eligibility to credit unions that anticipate being designated as a LICU or Non-LICU Complex Credit Union within 24 months following their planned issuance of the Subordinated Debt. The Board believes these proposed changes will allow additional credit unions to issue Subordinated Debt that would count as Regulatory Capital, which could aid these credit unions in complying with the PCA requirements in the FCU Act and the NCUA's regulations.

Under this proposed rule, all eligible credit unions, regardless of designation type, are required to submit an initial application for preapproval under § 702.408 of this section.

LICU Eligibility

Consistent with the FCU Act and the Current Secondary Capital Rule, the Board is proposing to maintain a LICU's authority to seek the NCUA's approval to issue Subordinated Debt. As of June 30, 2019, credit unions with a LICU designation represented 49 percent of all federally insured credit unions with total assets of $628 billion or 41 percent of the total federally insured credit union assets.

Non-LICU Eligibility

For the first time, the Board is proposing that the following categories of non-LICUs would generally be eligible to issue Subordinated Debt:

(1) Complex Credit Unions

Under this proposed rule, a non-LICU Complex Credit Union must have a capital classification of at least ''Undercapitalized,'' as defined in the NCUA's capital standards,[69] to be eligible to issue Subordinated Debt. The Board also notes that, under this proposed rule, the aggregate outstanding amount of Subordinated Debt issued by a non-LICU Complex Credit union may not exceed 100 percent of its Net Worth,[70] as determined at the time of each issuance of Subordinated Debt. The Board is proposing this limit so that the non-LICU Complex Credit Union's regulatory capital is not primarily composed of Subordinated Debt, a lower quality form of capital. This approach is generally consistent with the Tier 1 and Tier 2 capital requirements for banks.

(2) New Credit Unions

The Board is proposing that all New Credit Unions, not just those that are a LICU, may be eligible to issue Subordinated Debt pending an NCUA-approved application as described in §§ 702.408 and 702.409. A ''New Credit Union'' means a federally insured credit union that has been both in operation for less than ten years *and* has $10 million or less in total assets.[71] For purposes of this proposed rule, a New Credit Union may be a LICU or a non-LICU. The Board is proposing that a non-LICU New Credit Union have Retained Earnings equal to or greater than one percent of total assets to be eligible to issue Subordinated Debt. This provision is included to ensure the non-LICU New Credit Union has some level of loss-absorbing capacity before any deficit in Retained Earnings would be charged against the Subordinated Debt.

(3) Credit unions that anticipate becoming a Complex Credit Union or LICU within 24 months of issuance

In certain circumstances, the Board is proposing to extend eligibility for Subordinated Debt issuance to a credit union that does not meet the eligibility criteria currently, but has a reasonable likelihood of doing so in the near future. Under this proposal, an ineligible credit union that can demonstrate through an acceptable pro forma analysis that it is reasonably projected to become eligible within 24 months after issuance (that is, expects to become a non-LICU Complex Credit Union or a LICU within that timeframe) can obtain approval as well. Pro forma analysis should include projections of expected earnings and growth in a variety of plausible scenarios that, at a minimum include the required 24-month measurement horizon. Aspiring credit unions are also subject to the requirements of §§ 702.408 and 702.409 for preapproval and must include in their applications documents to evidence how they will successfully become a LICU (see § 701.34(a) requirements) or a Complex Credit Union within the 24-month period immediately following a planned issuance. The Board is providing this flexibility for aspiring credit unions that may consider Subordinated Debt as a potential source of funding within the required timeframe to support future growth while increasing Regulatory Capital.

FISCU Eligibility

A FISCU's authority to issue Subordinated Debt, if any, is set forth in applicable state law and regulation. Such state laws may be narrower or broader than those for FCUs. However, to the extent a FISCU may issue Subordinated Debt under applicable state law and regulation, it would be bound by proposed § 741.226.

Prohibition on Issuing and Investing in Subordinated Debt

For the reasons discussed in sections II. (A)(1) and II. (B)(3) of this preamble, the Board is proposing to prohibit, except in limited circumstances, a credit union from both issuing and investing in Subordinated Debt.

At the time of issuance of any Subordinated Debt, an Issuing Credit Union may not have any investments, direct or indirect, in Subordinated Debt or Grandfathered Secondary Capital (or any interest therein) of another credit union. If a credit union acquires Subordinated Debt or Grandfathered Secondary Capital in a merger or other consolidation, the Issuing Credit Union may still issue Subordinated Debt, but it may not invest (directly or indirectly) in the Subordinated Debt or Grandfathered Secondary Capital of any other credit union while any Subordinated Debt Notes issued by the Issuing Credit Union remain outstanding.

[66] 12 U.S.C. 1757a(c)(2)(A).

[67] *Id.* 1782(a)(6)(C)(i). This section of the FCU Act, provides a de minimus exception for following U.S. GAAP for credit unions with assets less than $10,000,000 unless prescribed by the Board or the appropriate SSA.

[68] Secondary capital issued by LICUs after [EFFECTIVE DATE OF THE FINAL RULE] would be considered Subordinated Debt.

[69] *See* 12 CFR 702.102.

[70] *See* proposed 702.403(c) of the proposed rule.

[71] 12 CFR 702.2.

4. § 702.404 Requirements of the Subordinated Debt and Subordinated Debt Notes

The Current Secondary Capital Rule allows LICUs to issue secondary capital to ''non-natural person members and non-natural person nonmembers.'' [72] Under the Current Secondary Capital Rule, a secondary capital account must:

- Be in the form of a written contract;
- Be an uninsured, non-share account;
- Have a minimum maturity of five years;
- Not be insured by the NCUSIF;
- Be subordinate to all other claims;
- Not be pledged or provided by the account investor as security on a loan or other obligation with the LICU or any other party;
- Be available to cover operating losses realized by the LICU that exceed its net available reserves, and to the extent funds are so used, the LICU must not restore or replenish the account under any circumstances. Losses must be distributed pro-rata among all Secondary Capital accounts held by the LICU at the time the losses are realized; and
- Be recorded as an equity account entitled uninsured Secondary Capital account.

Subordinated Debt Note Requirements

The Board is proposing changes to the requirements of the Current Secondary Capital Rule. The proposed changes include additional requirements to help ensure the Subordinated Debt Notes are clearly issued as debt, rather than equity, pursuant to the authority in the FCU Act for an FCU to borrow from any source.[73] Due to the cooperative structure of credit unions, and the members' rights to govern the affairs of them, FCUs do not have the authority to issue equity instruments. Therefore, it is essential for Subordinated Debt issued by FCUs to be considered debt rather than equity.

The Board notes that FISCUs may not be restricted under applicable state law and regulation to issuing only debt instruments. However, the Board is proposing that the debt requirement apply to both FCUs and FISCUs at this time. As insurer, the Board believes that the framework for the types of instruments that would qualify for Regulatory Capital should be consistent for all credit unions. The Board is requesting comments as to whether the NCUA should allow instruments other than debt instruments for FISCUs. If so, what specific instruments, including a detailed description, should be allowed? [74]

As part of the Subordinated Debt Note requirements, the Board is proposing to require that a Subordinated Debt Note be in the form of a written debt agreement. This requirement aligns with requirements in debt transactions of the type contemplated by this rule, which typically require written debt agreements.

Under the proposed rule, Subordinated Debt Notes must, at the time of issuance, have a fixed stated maturity of at least five years but no more than twenty years from issuance. The Current Secondary Capital Rule requires the Secondary Capital account to have a minimum maturity of five years, but does not have a maximum. A minimum maturity of five years is proposed, as it should create sufficient stability and longevity within a credit union's capital base to be available to cover losses. The Board is proposing the maximum maturity of 20 years to help ensure the Subordinated Debt is properly characterized as debt rather than equity. Generally, by its nature, debt has a stated maturity, whereas equity does not. The proposal is consistent with the OCC's subordinated debt regulation for a minimum maturity of five years, although that regulation does not have a maximum.[75] Because U.S. national banks can issue equity, the distinction of a debt versus equity characterization for subordinated debt under the OCC's regulations is not as critical as it is for FCUs.

Under proposed § 709.5(b), the Board is proposing that an Issuing Credit Union's Subordinated Debt be subordinate to all other claims in liquidation and have the same payout priority as all other Subordinated Debt, including Grandfathered Secondary Capital issued by the Issuing Credit Union. This proposed provision is substantially similar to the Current Secondary Capital Rule and the OCC's subordinated debt regulations. The FCU Act requires secondary capital accounts to be subordinate to all other claims against the Issuing Credit Union.[76] Further, the Board is not proposing a separate class for Subordinated Debt issued by non-LICU Complex Credit Unions or non-LICU New Credit Unions at this time.

The Board is proposing that any Subordinated Debt Note must be unsecured. This provision is consistent with the OCC's subordinated debt regulations,[77] and is not required in the Current Secondary Capital Rule. The Board is proposing this requirement because allowing arrangements that legally or economically secure Subordinated Debt would enhance the seniority of the Subordinated Debt in the event of liquidation of a credit union, which would be contrary to the proposed ''subordinate to all other claims'' requirement and the FCU Act, as discussed above. Additionally, if the Subordinated Debt Notes were secured by an asset of the Issuing Credit Union, it may interfere with the Issuing Credit Union's operations as it forces the Issuing Credit Union to direct assets or resources to secure the Subordinated Debt Note.

The proposed rule also prohibits two specific arrangements which, from an economic standpoint, would effectively act as a security arrangement for Subordinated Debt: (1) A sinking fund,[78] and (2) a compensating balance or any other funds or assets subject to a legal right of offset, as defined by applicable state law.[79] These arrangements, in essence, create a secured arrangement from an economic standpoint between the investor and Issuing Credit Union. In the event of the Issuing Credit Union's liquidation, these arrangements would function like collateral and be applied to the obligations of the Subordinated Debt. As a result, the Subordinated Debt Note could, in essence, become senior in right of payment to other credit obligations, thus limiting its ability to absorb losses and protect the NCUSIF.

The Board is proposing that, at the end of each of its fiscal years (or more frequently as determined by the Issuing Credit Union), the Issuing Credit Union must apply its issued Subordinated Debt to cover any deficit in Retained Earnings on a pro rata basis among all holders of the Subordinated Debt and Grandfathered Secondary Capital of the Issuing Credit Union. While this is similar to the Current Secondary Capital Rule, it clarifies the frequency and timing of applying the Subordinated Debt to credit union losses, thus providing more transparency to investors of Subordinated Debt. The current rule is silent on the timing and

[72] *Id.* 701.34(b).

[73] 12 U.S.C. 1757(9).

[74] Instruments to be considered must be permissible under applicable state law.

[75] 12 CFR 5.47(d)(1)(i).

[76] *See* 12 U.S.C. 1757a(c)(2)(B)(ii); 1790d(o)(2)(C)(ii).

[77] 12 CFR 5.47(d)(1)(iv).

[78] An example of a sinking fund arrangement is one that would require an FCU to periodically put aside money for the gradual repayment of the subordinated debt.

[79] An example of a compensating balance arrangement is where the investor would require an FCU to maintain a minimum balance in a bank account during the term of the debt.

frequency of applying Secondary Capital to credit union losses.

The Board is proposing that, except for approved prepayments discussed in sections II. (C)(11) and (12) of this preamble, the Subordinated Debt Note must be payable in full only at maturity. The Board is proposing this new provision to clarify that Subordinated Debt can only be prepaid with prior written approval from the NCUA as discussed in section II. (C)(11) of this preamble. While the Current Secondary Capital Rule does not include this provision, it does require the NCUA's approval to prepay secondary capital that no longer counts towards the credit union's Regulatory Capital.[80] As such, this provision would not impose additional burden on credit unions.

The Board is proposing to require disclosure by the Issuing Credit Union of any prepayment penalties or restrictions on prepayment of a Subordinated Debt Note. While the Current Secondary Capital Rule does not contain this restriction, the Board believes this proposed requirement provides additional protection and transparency for Subordinated Debt Note investors.

The Board is proposing changes to the permissible investors for Subordinated Debt. The proposed rule expands a credit union's current authority by allowing Subordinated Debt to be issued to Natural Person Accredited Investors and Entity Accredited Investors, except that no board member or Senior Executive Officer, and no Immediate Family Member of such board member or Senior Executive Officer, of the Issuing Credit Union may purchase or hold any Subordinated Debt Note issued by that Issuing Credit Union.

Under the proposed rule, Accredited Investors would be required to attest to their accredited status using a form that is substantially similar to the form contained in proposed § 702.406(c). This provision helps Issuing Credit Unions with their obligations to limit offers and sales of their Subordinated Debt Notes to qualified Accredited Investors.

Subordinated Debt Restrictions

The restrictions section of the proposed rule adds provisions similar to those found in the OCC's subordinated debt rule,[81] and also include provisions found in the Current Secondary Capital Rule. In general, these provisions are necessary to avoid undue restrictions on a credit union's authority or ability to manage itself in a safe and sound manner, ensure the Subordinated Debt is characterized as debt in accordance with U.S. GAAP, and prevent agreements that would interfere with the NCUA's supervision of credit unions.

The Board is proposing a restriction that no Subordinated Debt or Subordinated Debt Note be insured by the NCUA. This provision is consistent with the Current Secondary Capital Rule, which requires secondary capital accounts to be uninsured per the FCU Act.[82] Similarly, the OCC's subordinated debt regulations require that subordinated debt issued by national banks or federal savings associations not be insured by the FDIC.[83] One benefit of Subordinated Debt that counts as Regulatory Capital is that it acts as a buffer to protect the depositors at a credit union as well as the NCUSIF. To allow Subordinated Debt to be insured by the NCUA would be contrary to this benefit and the payout priorities discussed previously in this section and in section II. (D)(1) of this preamble.

The Board is proposing a restriction that the Subordinated Debt Note not include any express or implied terms that make it senior to any other Subordinated Debt or Grandfathered Secondary Capital. The Current Secondary Capital Rule contains a condition that Secondary Capital accounts are subordinate to all other claims. Similarly, the OCC's subordinated debt regulations require subordinated debt issued by national banks or federal savings associations to be subordinate to all depositors.[84] The proposed restriction clarifies the Current Secondary Capital Rule's intent by not allowing any express or implied terms that may be contrary to the proposed requirement that Subordinated Debt be subordinate to all other claims as discussed earlier in this section.

The Board is proposing a restriction that the issuance of Subordinated Debt may not cause a credit union to exceed the borrowing limit in § 701.38 for FCUs or, for a FISCU, any more restrictive state borrowing limit. While this restriction is not explicit in the Current Secondary Capital Rule, the borrowing limit is not a new regulation and the restriction currently applies to the issuance of secondary capital. The Board is proposing to include this provision to clarify that the borrowing limit does apply to Subordinated Debt issuances as they are considered borrowings for the Issuing Credit Union.

The Board is proposing a new restriction not found in the Current Secondary Capital Rule that the Subordinated Debt Note not provide the investor with any management or voting rights in the Issuing Credit Union. To allow management or voting rights for Subordinated Debt investors would lead to some loss of control of the credit union by the credit union's board. Per the FCU Act, ''the management of a Federal credit union shall be by a board of directors, a supervisory committee, and where the bylaws so provide, a credit committee.'' [85] Further, the FCU Act states the board of directors ''shall have the general direction and control of the affairs of the Federal credit union.'' [86] Therefore, allowing Subordinated Debt investors to have some control of the Issuing Credit Union would be contrary to requirements of the FCU Act.

The Board is proposing that Subordinated Debt Notes not be eligible to be pledged or provided by the investor as security for a loan from or other obligation owing to the Issuing Credit Union. This provision is consistent with the Current Secondary Capital Rule [87] and the OCC's subordinated debt regulations.[88] Allowing such a transaction with the Subordinated Debt Note as collateral would result in the Issuing Credit Union loaning funds to the investor secured by debt owed by the Issuing Credit Union to the investor. As a result, such an arrangement does not provide a risk mitigation benefit to an Issuing Credit Union.

The Board is proposing a restriction that the Subordinated Debt Note may not include any term or condition that would require a credit union to prepay or accelerate payment of principal or interest. This provision is not in the Current Secondary Capital Rule, but is consistent with the OCC's subordinated debt regulations.[89] The Current Secondary Capital Rule and this proposal both require preapproval to pay Grandfathered Secondary Capital or Subordinated Debt prior to maturity as discussed in section II. (C)(11) of this preamble. Therefore, including such a term or condition in the Subordinated Debt Note may place a credit union in default should the NCUA not approve a request to prepay.

[80] 12 CFR 701.34(d).

[81] *Id.* 5.47.

[82] 12 U.S.C. 1757a(c)(2)(B)(ii); 1790d(o)(2)(C)(ii).

[83] 12 CFR 5.47(d)(ii).

[84] *Id.* 5.47(d)(1).

[85] 12 U.S.C. 1761(a).

[86] *Id.* 1761b.

[87] 12 CFR 701.34(b)(8).

[88] *Id.* 5.47(d)(1)(v).

[89] *Id.* 5.47(d)(1)(vii).

The Board is proposing a restriction that a Subordinated Debt Note not include a term or condition that would trigger an event of default based on the credit union's default on other debts. This provision is not in the Current Secondary Capital Rule and the OCC's subordinated debt regulations do not specifically address this provision. However, the OCC's Comptroller's Licensing Manual for Subordinated Debt [90] includes an example of a reasonable default trigger as one where the trigger is based on the bank having defaulted on other debts, but it includes a threshold for the amount of defaulted debt, such as a certain percent of capital. The Board is seeking comment on whether it should include a threshold trigger, rather than restrict all defaults based on a credit union's default on other debts (and, if so, what the threshold should be).

The Board is proposing that the terms of a Subordinated Debt Note may not require the credit union to make any form of payment other than in cash. A similar provision is not in the Current Secondary Capital Rule. However, the Board believes this provision is appropriate, as to allow other forms of payment that may not be liquid or may have price volatility (for example, foreign currency) results in an Issuing Credit Union taking on more risk.

Negative Covenant Provisions

Similar to the section above, the Board has added a negative covenants [91] section. This section includes requirements similar to the OCC's subordinated debt regulations.[92] Should a credit union agree to such provisions, the NCUA would consider the practice unsafe and unsound, for the reasons discussed below. Further, these provisions, if agreed to, could potentially interfere with the NCUA's supervision of a credit union.

The Board is proposing that a Subordinated Debt Note may not contain covenants that require an Issuing Credit Union to maintain a minimum amount of Retained Earnings or other financial performance provision. Although the Current Secondary Capital Rule does not contain this prohibition, this requirement is consistent with the OCC's subordinated debt regulations.[93] To require a credit union to maintain a minimum amount of Retained Earnings or other financial performance provision could impede the operations of the credit or cause the credit union to take on excessive risk to maintain this requirement and avoid default.

The Board proposes to prohibit covenants that unreasonably restrict an Issuing Credit Union's ability to raise capital through issuance of additional Subordinated Debt. This new provision is consistent with the OCC's Subordinated Debt regulations.[94] The ability to issue Subordinated Debt provides eligible credit unions a long-term, stable source of funding for expansion and the coverage of losses. Therefore, such a covenant could impede operations and the financial well-being of the Issuing Credit Union and would be considered unsafe and unsound.

The Board is proposing prohibiting covenants that provide for default of Subordinated Debt as a result of an Issuing Credit Union's compliance with any law, regulation, or supervisory directive from the NCUA (or SSA, if applicable). The Board believes it is unsafe and unsound to allow such a covenant, as it would hamper the NCUA's or SSA's ability to effectively supervise the credit union or subject the credit union to escalated administrative actions for failure to follow a directive to avoid default on the Subordinated Debt. Further, it could potentially cause monetary fines against the credit union from failure to follow a law or regulation in order to avoid default.

The Board is proposing a new provision which would prohibit covenants that provide for default of the Subordinated Debt as the result of a change in the ownership, management, or organizational structure, or charter of an Issuing Credit Union provided that the Issuing Credit Union or resulting institution, as applicable:

- Following such change, agrees to perform all obligations, terms, and conditions of the Subordinated Debt; and
- At the time of such change, is not in material default of any provision of the Subordinated Debt Note, after giving effect to the applicable cure period of not less than 30 calendar days.

The proposed prohibition is substantially similar to the OCC's subordinated debt regulations.[95] Change in management or organizational structure or charter of the Issuing Credit Union should have no impact on the Subordinated Debt as it would still be an obligation of the Issuing Credit Union under these circumstances. Further, to allow such a provision would provide a level of control to the investor over the affairs of the Issuing Credit Union. This would be contrary to the proposed Subordinated Debt restriction on allowing the investor with any management or voting rights in the Issuing Credit Union discussed earlier in this section.

Additionally, in the case of a merger, as discussed in section II. (C)(12) of the preamble, the Board is proposing that Subordinated Debt can be assumed by the continuing credit union. However, whether the Subordinated Debt counts as Regulatory Capital would still be based on the continuing credit union's eligibility as discussed in section II. (C)(3) of this preamble.

The Board is proposing a new provision that prohibits covenants that provide for default of the Subordinated Debt as the result of an act or omission of any third party. The Board believes that agreeing to such a provision would be unsafe and unsound for an Issuing Credit Union. While credit unions are expected to perform due diligence over third parties utilized, a credit union does not control the acts or omissions of the third parties. As such, it is not a reasonable expectation for the actions of a third party to trigger default or acceleration of payment of the Subordinated Debt.

Default Covenants

The Board is proposing that Subordinated Debt Notes that include default covenants must provide the Issuing Credit Union with a reasonable cure period of not less than 30 calendar days. This new provision provides protection for Issuing Credit Unions by ensuring a reasonable cure period in the event of default. Further, this provision is consistent with the guidance issued by the OCC.[96]

Minimum Denominations

In order to provide additional protections to purchasers of Subordinated Debt Notes who are Natural Person Accredited Investors, the Board is proposing that Subordinated Debt Notes sold or transferred to Natural Person Accredited Investors be made in

[90] Office of the Comptroller of the Currency, Comptroller's Licensing Manual: Subordinated Debt (2017), *available at https://www.occ.gov/publications-and-resources/publications/comptrollers-licensing-manual/files/licensing-booklet-subordinated-debt.html.*

[91] A ''negative covenant'' is a clause found in loan agreements that prohibits a borrower from an activity.

[92] 12 CFR 5.47(d).

[93] *Id.* 5.47(d)(2)(i).

[94] *Id.* 5.47(d)(2)(ii).

[95] 12 CFR 5.47(d)(2)(iii).

[96] Office of the Comptroller of the Currency, Comptroller's Licensing Manual: Subordinated Debt, 19 (2017), *available at https://www.occ.gov/publications-and-resources/publications/comptrollers-licensing-manual/files/licensing-booklet-subordinated-debt.html* (stating that ''a bank should have a reasonable opportunity to cure the default.'').

minimum denominations of $100,000. In addition, resales of Subordinated Debt Notes to Natural Person Accredited Investors could only be made in minimum denominations of $10,000. Requiring larger denomination notes, and preventing them from being broken into smaller denominations helps ensure that the purchasers of the Subordinated Debt Notes are sophisticated, high net worth individuals.

The Board notes that an Issuing Credit Union may establish a larger minimum denomination for any issue of Subordinated Debt Notes sold to Natural Person Accredited Investors, as long as any such minimum denominations are adequately disclosed to potential investors and reflected in the related transaction documents. Under the proposed rule, there would be no minimum denomination requirements for Subordinated Debt Notes sold to Entity Accredited Investors because those purchasers are corporate entities who, in the Board's view, are sufficiently sophisticated in financial matters such that the additional protections afforded by large minimum denomination are not necessary.

The Board notes that, since 1995, the OCC has imposed a $250,000 minimum denomination requirement in sales of nonconvertible subordinated debt, which are limited to ''accredited investors.'' Further, in 1992, the OCC proposed a minimum denomination of $100,000 for such sales, but increased it to $250,000 in the corresponding final rule.[97] Recognizing the potential for overlap in market participants for Subordinated Debt Notes issued by Issuing Credit Unions and national bank nonconvertible debt instruments, the Board specifically requests comment on whether the NCUA's minimum denomination requirements should correspond with the OCC's requirements. In other words, (a) should the NCUA require minimum denominations of $250,000 in sales of Subordinated Debt Notes to Natural Person Accredited Investors, and (b) should the NCUA impose a minimum denomination requirement on sales of Subordinated Debt Notes to Entity Accredited Investors and, if so, should it be $10,000, $250,000, or a different threshold?

5. § 702.405 Disclosures

As discussed in section I. (E)(2) of this preamble, the federal securities laws and related SEC rules do not require an issuer of securities to provide any particular level of disclosure to potential investors in securities that are offered, issued, and sold pursuant to most exemptions from the registration requirements of the Securities Act, nor do they mandate the content of any disclosure an issuer chooses to provide. Although the SEC makes it clear that its ''anti-fraud'' rules apply to all offers and sales of securities, whether registered or exempt from registration, disclosure practices vary widely.[98]

The Board believes that adopting a regulatory framework for the offer, issuance, and sale of Subordinated Debt Notes will benefit both Issuing Credit Unions and investors. Such a framework will provide potential investors information that is important to making a decision to invest in Subordinated Debt Notes of Issuing Credit Unions, and will clearly define the obligations of Issuing Credit Unions. The framework will also clarify various other investment considerations that an Issuing Credit Union should disclose to potential investors before their investment.

The Board further believes this framework will help promote investor confidence, which is particularly important in view of credit unions' relative inexperience offering and selling securities. In addition, the Board believes that the proposed disclosure requirements will reduce the risk of investor claims against an Issuing Credit Union, which will provide at least two key benefits. Reducing investor claims may encourage credit unions concerned with the risks associated with the offer and sale of securities to take advantage of opportunities to raise capital through the sale of Subordinated Debt Notes. It also helps protect the interests of credit union members, as such claims could have an adverse effect on the safety and soundness of an Issuing Credit Union.

The proposed rule requires an Issuing Credit Union to deliver an Offering Document to potential investors in Subordinated Debt Notes and prescribes certain specific disclosures to be made in the Offering Document and in the Subordinated Debt Note itself. Section 702.405 covers the disclosure requirements for the Subordinated Debt Note, while the disclosure requirements for the Offering Document are addressed in § 702.408.

Section 702.405 requires that certain disclosure legends be prominently displayed on the face of the Subordinated Debt Note, and that certain additional disclosures be included elsewhere in the body of the Subordinated Debt Note.[99] The Board's intention in proposing these requirements is to alert potential investors of a number of important matters regarding an investment in a Subordinated Debt Note. Because the required disclosures are required to be included in the Subordinated Debt Note itself, both initial investors (purchasers of the Subordinated Debt Note directly from the Issuing Credit Union) and persons who subsequently acquire the Subordinated Debt Note will have ready access to the information.

Paragraph (a) of § 702.405 requires that certain disclosure legends be prominently displayed on the face of the Subordinated Debt Note. Some of the required legends identify risks specific to an investment in any Subordinated Debt Notes of Issuing Credit Unions, including the:

- Prohibition on a holder of a Subordinated Debt Note from using the note as collateral for a loan from the Issuing Credit Union;
- Possibility that a portion of, or all of, the principal amount of a Subordinated Debt Note would be reduced to cover any deficit in retained earnings at the end of a credit union's fiscal year (or more frequently, as determined by the Issuing Credit Union), with the result that the amount equal to such reduction would no longer by payable on such Subordinated Debt Note; and
- Prohibition on redemption or prepayment of all or a portion of outstanding Subordinated Debt Notes prior to maturity, other than in limited circumstances involving advance approval of the NCUA or in connection with a voluntary liquidation of the Issuing Credit Union.

Other required legends, such as the requirement to inform investors that the Subordinated Debt Notes are not shares in the Issuing Credit Union and are not insured by the NCUA, are similar to those that are required in offerings of securities by other types of regulated financial institutions. The required legend noting that the issuance and sale of the Subordinated Debt Note are not registered under the Securities Act is intended to alert potential investors that the Subordinated Debt Note does not benefit from all of the protections that are provided by Securities Act registration, and the disclosure legend language identifying the restrictions on

[97] 59 FR 54789, 54792 (Nov. 2, 1994).

[98] *See* 17 CFR 230.501(a) (''Users of Regulation D (230.500) should note the following: (a) Regulation D relates to transactions exempted from the registration requirements of section 5 of the Securities Act. . . Such transactions are not exempt from the anti-fraud, civil liability, or other provisions of the federal securities laws.'').

[99] A ''legend'' is a statement on a security, often noting restrictions on transfer or sale or other material limitations related to the security.

the sale or other transfer of Subordinated Debt Notes by holders informs holders of the notes that they are not freely tradeable, alerting them to the fact that the Subordinated Debt Notes may not be liquid investments supported by an active (or any) secondary trading market.

This last legend combines elements of legends typically included in securities offered, issued and sold in offerings made pursuant to certain exemptions from the registration requirements of the Securities Act and elements that relate to other parts of the proposed rule that are unique to offers and sales of Subordinated Debt Notes, including the prohibition on sales or resales to members of the Issuing Credit Union's board, Senior Executive Officers and/or Immediate Family Members of board members or Senior Executive Officers.

In paragraph (b) of § 702.405, the Board proposes a requirement that an Issuing Credit Union include certain additional disclosures in the body of the Subordinated Debt Note. As is the case with the disclosure legends required by paragraph (a) of § 702.405, the purpose of these disclosures is to inform potential investors of a number of important matters regarding an investment in the Subordinated Debt Note.

The disclosures required under paragraph (b) in the proposed rule are intended to draw attention to certain potential repayment risks if an Issuing Credit Union is:

- Subject to an involuntary liquidation;
- ''Undercapitalized'' (for credit unions that are not New Credit Unions) or ''Moderately Capitalized'' (for credit unions that are New Credit Unions) and fails to submit or implement an acceptable restoration plan; or
- Classified as ''Critically Undercapitalized'' (for credit unions that are not New Credit Unions) or ''Uncapitalized'' (for credit unions that are New Credit Unions).

The required disclosure regarding the consequences of an involuntary liquidation must describe the payout priority and level of subordination as provided in § 709.5(b). The disclosure regarding ''Undercapitalized'' or ''Moderately Capitalized'' status of an Issuing Credit Union must address the additional restrictions and requirements that would be imposed on the Issuing Credit Union if it fails to submit an acceptable net worth restoration plan, capital restoration plan, or revised business plan or if it materially fails to implement a plan that was approved by the NCUA (which restrictions and requirement are those applicable to a ''Significantly Undercapitalized'' credit union, for credit unions that are not New Credit Unions) or a ''Marginally Capitalized'' credit union (for credit unions that are New Credit Unions).

The disclosure regarding an Issuing Credit Union that has been classified as ''Critically Undercapitalized'' or ''Uncapitalized'' must indicate that, beginning 60 days after the effective date of the ''Critically Undercapitalized'' or ''Uncapitalized'' classification, the Issuing Credit Union is prohibited from paying principal of, or interest on, its Subordinated Debt Notes until it is reauthorized to do so by the NCUA, in writing (although unpaid interest may continue to accrue).

Finally, paragraph (b) also requires an Issuing Credit Union to provide an overview of the risks associated with authority of the NCUA or any applicable SSA to conserve or liquidate a credit union under federal or state law. As noted in the discussion of § 702.408, in addition to making these disclosures in the Subordinated Debt Note, substantially similar disclosures will also be required to be included in the Offering Document.

Certain of the disclosures required by the proposed rule correspond to disclosure requirements set forth in the Current Secondary Capital Rule, including that Secondary Capital is not insured by the NCUA and that Secondary Capital is subordinate to all other claims on the assets of the Issuing Credit Union, including member shareholders, creditors, and the NCUSIF. The Board acknowledges, however, that the disclosure requirements for all Subordinated Debt Notes in § 702.405 of the proposed rule exceed current disclosure requirements in the Current Secondary Capital Rule.

As discussed earlier in this section, the Board believes that its proposed regulatory framework for the offer, issuance, and sale of Subordinated Debt Notes will benefit both Issuing Credit Unions and investors in a number of ways, including promoting investor confidence and reducing investor claims. Further, the requirements underlying this framework, including these proposed disclosures, have been in use in securities offerings for a number of years and are familiar to investors, market professionals, and legal advisors. Accordingly, the Board believes that the benefit from these proposed disclosure requirements far outweighs any associated burden associated in complying with them.

6. § 702.406 Requirements Related to the Offer, Sale, and Issuance of Subordinated Debt Notes

In addition to specifying the disclosures required to be provided to potential investors in Subordinated Debt Notes, the proposed rule addresses other key components of a regulatory framework for the offer, issuance, and sale of Subordinated Debt Notes. The provisions of § 702.406 cover a number of those key components, including:

- Delivery requirements of Offering Documents to potential investors;
- Limitations on the types of investors who may purchase and hold Subordinated Debt Notes (either in the initial sale of the Subordinated Debt Notes or in connection with any resales or other transfers of Subordinated Debt Notes);
- Qualification standards for trustees engaged by an Issuing Credit Union; and
- Policies and procedures to be followed by Issuing Credit Unions in connection with offers, issuances, and sales of their Subordinated Debt Notes.

Paragraph (a) of § 702.406 obligates an Issuing Credit Union to deliver an Offering Document that satisfies the requirements of § 702.408(e) to each purchaser of its Subordinated Debt Notes. While § 702.408(e) specifies certain disclosure topics that must be addressed in every Offering Document, paragraph (a) of § 702.406 reminds Issuing Credit Unions that those are the *minimum* required disclosures and, depending on the surrounding facts and circumstances, additional disclosure may be necessary to provide potential investors with material information relevant to an investment decision.

The proposed rule's obligation to provide such further material information as may be necessary to make the required disclosures, in the light of the circumstances under which those disclosures have been made, not misleading, is consistent with the anti-fraud concepts embodied in the federal securities laws. These include Rule 10b–5 under the Exchange Act.[100] As noted earlier, the anti-fraud rules apply to all offers and sales of securities, whether or not such offers and sales are registered under the Securities Act.

[100] 17 CFR 240.10b–5. In pertinent part, the rule provides:

It shall be unlawful for any person, directly or indirectly, by the use of any means or instrumentality of interstate commerce, or of the mails or of any facility of any national securities exchange . . . (b) To make any untrue statement of a material fact or to omit to state a material fact necessary in order to make the statements made, in the light of the circumstances under which they were made, not misleading . . . in connection with the purchase or sale of any security.

Paragraph (a) also addresses the timing of delivery of the Offering Document by an Issuing Credit Union, requiring that the document be delivered in a reasonable time before any issuance and sale. The ''reasonable time'' requirement is consistent with a number of SEC rules relating to securities offerings exempt from Securities Act registration.[101] While the Board believes an Issuing Credit Union should determine what constitutes a reasonable time, the intent of the requirement is to ensure that potential investors receive the Offering Document sufficiently in advance of making a purchase decision so to provide them with a meaningful opportunity to review the document and, if desired, consult with financial and/or legal advisors.

Paragraphs (b) and (c) of § 702.406 impose limitations on who may invest in Subordinated Debt Notes, and cover both initial purchasers of Subordinated Debt Notes (purchasers buying Subordinated Debt Notes in the initial issuance from an Issuing Credit Union) and subsequent purchasers or transferees of Subordinated Debt Notes who acquire the securities from an existing holder of a note.

Paragraph (b) prohibits issuances and sales of Subordinated Debt Notes outside of the United States (any one of the states thereof, including the District of Columbia, its territories, and its possessions). The Board determined not to allow non-US investors from purchasing or holding any Subordinated Debt Notes because the risks and complexities associated with offshore offerings of securities outweighed the potential benefits to credit unions, especially given that credit unions generally are not significantly involved in foreign transactions. The Board specifically is requesting comment as to whether this restriction unduly limits the marketability and functionality of Subordinated Debt Notes issuances.

Paragraph (c) prohibits issuances and sales of Subordinated Debt Notes to persons other than Accredited Investors. The definition of ''Accredited Investor'' in § 702.402 includes two types of Accredited Investors; the definitions of ''Entity Accredited Investors'' and ''Natural Person Accredited Investors'' tie to the categories included in the definition of ''Accredited Investor'' in Rule 501(a) of Regulation D under the Securities Act, with one important exception.[102] The definition of ''Accredited Investor'' omits certain persons affiliated with an Issuing Credit Union—board members and senior executive officers of an Issuing Credit Union are not ''Accredited Investors'' for purposes of the proposed rule, nor are Immediate Family Members of any such board member or senior executive officer. As a result, board members and senior executive officers of the Issuing Credit Union and their Immediate Family Members are prohibited from purchasing or holding Subordinated Debt Notes of that Issuing Credit Union.

The Board believes that limiting the potential pool of investors is appropriate given the risks involved in investing in securities that share the characteristics of Subordinated Debt Notes. It also believes that investors should possess a level of sophistication that permits them to understand the terms of Subordinated Debt Notes and adequately assess the risks involved in an investment in this type of security and in the Issuing Credit Union. The Board notes that the OCC restricts sales of national banks' nonconvertible Subordinated Debt to Accredited Investors, but does not impose this restriction on other sales of Subordinated Debt instruments.[103] The Board specifically is requesting comment on whether restricting sales of Subordinated Debt Notes to Accredited Investors unduly limits the marketability and functionality of Subordinated Debt Notes issuances.

As noted above, the proposed rule also distinguishes between Natural Person Accredited Investors and Entity Accredited Investors. While this distinction matters in important ways for offers and sales of Subordinated Debt Notes, including minimum denomination requirements, Offering Document approval processes, and resale provisions, it does not alter the Board's belief that every investor in Subordinated Debt Notes must be sophisticated and able to assess the risks inherent in this type of investment. Rather, the Board believes that Entity Accredited Investors are likely to be even more sophisticated investors than Natural Person Accredited Investors and, therefore, some of the restrictions that the proposed rule places on Natural Person Accredited Investors are not necessary for the protection of Entity Accredited Investors. The Board recognizes that the OCC does not distinguish between categories of Accredited Investors in this same way. Therefore, the Board specifically requests comment on whether this distinction between Entity Accredited Investors and Natural Person Accredited Investors unduly limits the marketability and functionality of Subordinated Debt Notes issuances.

The Board also believes it is inappropriate to permit an Issuing Credit Union's board members, Senior Executive Officers, or their Immediate Family Members to purchase or hold Subordinated Debt Notes due to conflict of interest and anti-fraud concerns that certain of those such individuals exercise control over the Issuing Credit Union and have, or could gain, access to material non-public information in respect of the Issuing Credit Union and/or the Subordinated Debt Notes. The Board specifically is requesting comment as to whether this restriction unduly limits the marketability and functionality of Subordinated Debt Notes issuances.

For the same reasons as there are restrictions on initial purchasers of Subordinated Debt Notes, paragraph (c), paragraph (g), and § 702.404(a)(10) operate together to prohibit the reissuance or resale of Subordinated Debt Notes to persons other than Accredited Investors. They also prohibit the reissuance, resale, or other transfer of Subordinated Debt Notes to an Issuing Credit Union's board members, senior executive officers, or their Immediate Family Members.

Further, the ability to reissue or resell Subordinated Debt Notes after their initial issuance depends on the nature of the initial purchaser of the securities. Subordinated Debt Notes initially purchased by an Entity Accredited Investor may be reissued or resold *only* to another Entity Accredited Investor, while Subordinated Debt Notes initially purchased by a Natural Person Accredited Investor may be reissued or resold to an Entity Accredited Investor *or* a Natural Person Accredited Investor.

Paragraph (c) of § 702.406 also requires an Issuing Credit Union to take certain steps to verify the Accredited Investor status of potential purchasers. Issuing Credit Unions will be required to obtain a Certificate of Accredited Investor Status from each potential purchaser and take additional steps to verify a potential investor's status by reviewing specific financial information from tax returns, brokerage statements and similar documentation, or by receiving a certification of a potential investor's status as an Accredited Investor from a broker-dealer, registered investment adviser, attorney, or certified public accountant. These verification requirements and methods are substantially similar to the requirements and methods provided in Rule 506(c) of Regulation D under the Securities

[101] *See, e.g.,* 17 CFR 230.506(b).

[102] 17 CFR 230.501(a).

[103] 12 CFR part 5.

Act.[104] The Board believes that following practices that have been in use in securities offerings for a number of years and which are familiar to investors, market professionals, and legal advisors will allow Issuing Credit Unions to more easily implement investor verification protocols that meet the requirements of the proposed rule.

Paragraph (d) of § 702.406 sets qualification standards for trustees engaged by Issuing Credit Unions in connection with issuances and sales of Subordinated Debt Notes. Under the proposed rule, an Issuing Credit Union is not required to engage a trustee.[105] However, if an Issuing Credit Union chooses to engage a trustee, the trustee must meet the qualification requirements of the Trust Indenture Act of 1939, as amended (TIA), related TIA rules, and any applicable state law qualification requirements.

Because of the significance of the trustee's role in issuances of debt securities, the Board believes it is appropriate to impose these standards to ensure the competence, independence, and financial soundness of the trustee, and that employing the market-accepted qualification standards set forth in the TIA sufficiently addresses those matters. Even if an offering of debt securities has a qualified trustee, however, the indenture administered by that qualified trustee does not need to meet all of the requirements of the TIA applicable to the form and content of indentures.[106]

Paragraph (e) of § 702.406 covers sales practices of an Issuing Credit Union relating to offers, issuances, and sales of Subordinated Debt Notes, including at any office of the Issuing Credit Union. In this context, an ''office'' means any premises used by the Issuing Credit Union that is identified to the public through advertising or signage using the Issuing Credit Union's name, trade name, or logo.

The proposed rule permits sales activities by an Issuing Credit Union of its own Subordinated Debt Notes if the Issuing Credit Union completes a written application and receives approval from its Appropriate Supervision Office. The application requires, in significant part, that the Issuing Credit Union provide a written description of its plan to comply with the sales practices requirements delineated in paragraph (e).

The substantive requirements of paragraph (e) are intended to prescribe acceptable sales practices that are consistent with general industry norms for sales of securities, while discouraging sales practices the Board believes are inappropriate for credit unions and will help reduce the possibility that an Issuing Credit Union, affiliated credit union service organization (CUSO), or their respective employees violate applicable securities laws.

In particular, the proposed rule prohibits the payment of direct or indirect compensation in the form of commissions, bonuses, or similar payments to any employee of the Issuing Credit Union or a CUSO who assists in the marketing and sale of the Issuing Credit Union's Subordinated Debt Notes. The prohibition does not apply to payments made to securities personnel of registered broker-dealers or payments otherwise permitted by applicable law, provided that such payments are consistent with industry norms.

Paragraph (e) also places limits on the Issuing Credit Union and/or CUSO personnel who may engage in the marketing and sales efforts. Under the proposed rule, marketing activities and sales may only be undertaken by regular, full-time employees of the Issuing Credit Union and/or securities personnel who are subject to supervision by a registered broker-dealer (who may be employees of the Issuing Credit Union's affiliated CUSO that is assisting in the marketing and sale of the Issuing Credit Union's Subordinated Debt Notes).

All sales, including resales, of securities must comply with applicable securities laws. Paragraph (g) of § 702.406 prescribes the ways in which Subordinated Debt Notes may be resold following their initial sale by an Issuing Credit Union. Subordinated Debt Notes sold by an Issuing Credit Union pursuant to an exemption from registration under the Securities Act may only be resold pursuant to the same or another exemption from registration under the Securities Act. This resale exemption may be the same one on which an Issuing Credit Union relied in connection with the initial sale of the Subordinated Debt Notes or it may be another available exemption.

7. § 702.407 Discounting of Amount Treated as Regulatory Capital

The Board is proposing to adopt the current § 701.34 requirements for discounting the Subordinated Debt amount for Regulatory Capital purposes with a technical refinement on the calculation of the amount.

The Current Secondary Capital Rule requires a credit union to use the lesser of the remaining balance of the accounts after any redemption and losses; or the original amount of secondary capital reduced by 20 percent annually starting once the remaining maturity of the Secondary Capital is less than five years. This treatment is consistent with the treatment of subordinated debt by the FDIC and the OCC.

The Board is proposing to simplify how a credit union would base its discounting calculation on the net amount outstanding at the time the credit union conducts its calculation. This means that, if a credit union prepays any of its Subordinated Debt, the amount that would be discounted would be the net amount that remains after the prepayment. By doing this, the Board is making the proposed rule more consistent with the FDIC and OCC treatment of subordinated debt that counts towards Tier 2 capital.[107]

For example, if ABC FCU originally issued a $20 million Subordinated Debt Note and prepays $10 million of the original note, the balance treated as Regulatory Capital would be calculated using the remaining outstanding amount ($10 million), not the original Subordinated Debt Note ($20 million).

The following chart shows the outstanding balance of the Subordinated Debt, on a percentage basis that counts as Regulatory Capital:

Remaining maturity	Balance treated as Regulatory Capital (percent)
Four to less than five years.	80
Three to less than four years.	60
Two to less than three years.	40
One to less than two years.	20
Less than one year.	0

The proposed rule would require an Issuing Credit Union to apply the percentage of the outstanding Subordinated Debt that counts as Regulatory Capital included in the Net Worth and/or the RBC Ratio to each quarter-end Call Report cycle, because Net Worth and the RBC Ratios are required to be calculated at quarter-end. For example, if ABC FCU has $10 million in outstanding Subordinated Debt, the full amount would count towards Regulatory Capital if it matures in five years or more. Once the

[104] *See* 17 CFR 230.506(c).

[105] With certain exceptions, trustees generally are required only in connection with offerings of debt securities registered under the Securities Act.

[106] 15 U.S.C. 77aaa–77bbbb.

[107] 12 CFR 3.20(d)(iv); 12 CFR 324.20(d)(iv).

remaining maturity of the Subordinated Debt is less than five years, the amount of outstanding Subordinated Debt that counts towards Regulatory Capital will reduce by 20 percent annually. This means that the amount that would count towards Regulatory Capital would be:

- $10 million if the remaining maturity is at least five years;
- $8 million if the remaining maturity is at least four years and less than five years;
- $6 million if the remaining maturity is at least three years and less than four years;
- $4 million if the remaining maturity is at least two years and less than three years;
- $2 million if the remaining maturity is at least one year and less than two years; and
- No amount would count towards Regulatory Capital if the maturity is less than one year.

As discussed in section II. (C)(11) of this preamble, the proposal would create a new authority to allow FCUs to prepay Subordinated Debt if the prepayment option is clearly disclosed in the Subordinated Debt Note and approval is granted by the Appropriate Supervision Office, in writing. As discussed above, if an FCU does prepay a portion of the Subordinated Debt, only the remaining outstanding balance of the Subordinated Debt would be used to calculate the balance treated as Regulatory Capital.

8. § 702.408 Preapproval To Issue Subordinated Debt

The Board is proposing that eligible credit unions be required to submit an application and receive written preapproval from the NCUA before issuing Subordinated Debt. Currently, under the Current Secondary Capital Rule, a federally chartered LICU must receive approval of its secondary capital plan by the NCUA before it may offer secondary capital accounts. A federally insured, state-chartered LICU must receive approval of its secondary capital plan by the applicable SSA, with the NCUA's concurrence, before it may offer secondary capital.

The Board remains dedicated to a requirement for an eligible credit union to obtain written preapproval before issuing Subordinated Debt as it views this step as an important prudential safeguard. The Board believes a preapproval process is part of a credit union's sound management plan, and helps the NCUA ensure that planned debt securities are structured in such a manner as to appropriately protect the NCUSIF.

As discussed below, the Board proposes to require a credit union to include information on 15 specific topics in its initial application to issue Subordinated Debt. The Board recognizes the many potential benefits that an issuance of Subordinated Debt Notes may confer on an Issuing Credit Union, but it also appreciates the concomitant complexities and risks. The decision to offer and sell securities such as Subordinated Debt Notes should be made only after careful consideration, preparation, and diligence by the Issuing Credit Union, including with professional advisors as warranted. For this reason, the Board is proposing to continue to require *all* credit unions contemplating an offer, issuance, and sale of Subordinated Debt Notes to receive the NCUA's prior written approval before engaging in such activity.

Background

In 2006,[108] the Board amended § 701.34 to add a requirement for regulatory approval of a LICU's secondary capital plan before it could issue such accounts. The Board highlighted, by requiring prior approval of a secondary capital plan, that it was strengthening supervisory oversight and detection of lenient practices in several ways. First, it will prevent LICUs from accepting and using secondary capital for purposes and in amounts that are improper or unsound. Second, the approval requirement will ensure that secondary capital plans are evaluated and critiqued by the NCUA Regional Director before being implemented. Third, for both the NCUA and LICUs, an approved secondary capital plan will document parameters to guide the proper implementation of secondary capital, and to measure the LICU's progress and performance.[109]

In September 2019, the NCUA issued a Letter to Credit Unions,[110] ''Evaluating Secondary Capital Plans,'' which included a Supervisory Letter to NCUA staff. The Supervisory Letter provided information about the authority of LICUs to offer secondary capital accounts and specified a consistent framework for the analysis and approval or denial of secondary capital plans submitted to the NCUA for approval.

As part of this proposed rule, the Board is looking to enhance and clarify much of the existing secondary capital account plan requirements in paragraphs (b), (c), and (d) of the Current Secondary Capital Rule by adding similar provisions to the proposed § 702.408 of the proposed rule to govern the issuance of Subordinated Debt. All of the current secondary capital plan requirements are incorporated into these proposed rule requirements with additional provisions aimed at greater clarification of the NCUA's expectations for diligence and supporting analysis. The proposed review and analysis of a credit union's Subordinated Debt documents by the NCUA is intended to make the preapproval process more efficient while ensuring that credit union applicants comply with applicable laws and regulations and that the issuance of Subordinated Debt represents a safe and sound endeavor.

The NCUA's analysis of applications will be fact-specific to each credit union's situation at the time a credit union submits its Subordinated Debt application documents for approval. It is important to note that these proposed preapproval requirements specifically state that the requirements represent the *minimum* information an eligible credit union must include in the application.

Preapproval for FISCUs To Issue Subordinated Debt

Under this proposed rule, a FISCU would be subject to the preapproval requirements in § 702.408. Under this proposal, FISCUs would also be subject to the requirements of § 702.409, which, as discussed in section II. (C)(9) of this preamble, would contain additional preapproval requirements for FISCUs.

Preapproval Requirements and Steps

The Board is proposing the following preapproval requirements as part of an initial application process. Questions from the NCUA arising during the proposed preapproval process could result in the need for a credit union to submit additional documents. In addition, certain credit unions will need preapproval of the Offering Documents depending on whether the investor is a Natural Person Accredited Investor or an Entity Accredited Investor as outlined in § 702.408(d).

[108] 71 FR 4234 (Jan. 26, 2006). The last substantive amendments to the NCUA's secondary capital regulations took place in 2010 with the addition of language regarding secondary capital received under the Community Development Capital Initiative of 2010. 75 FR 57843 (Sept. 23, 2010).

[109] 71 FR 4234, 4237 (Jan. 26, 2006).

[110] Supervisory Letter No. 19–01, (Sept. 16, 2019), *available at https://www.ncua.gov/files/supervisory-letters/SL-19-01-evaluating-secondary-capital-plans.pdf.*

Preapproval and reporting steps	Proposed rule section
Initial Application and NCUA Approval Process	§ 702.408(b) and (c).
Offering Documents and NCUA Approval Process, Submission of Offering Documents after use	§ 702.408(d) through (g).
Submission of All Documents after Issuance	§ 702.408(i).

Initial Application To Issue Subordinated Debt

The Board is proposing that all eligible [111] credit unions be required to submit an initial application (§ 702.408(b)) to the Appropriate Supervision Office that, at a minimum, includes the following 15 items:

(1) A statement indicating how the credit union qualifies to issue Subordinated Debt given the eligibility requirements of § 702.403 with additional supporting analysis if anticipating to meet the requirements of a LICU or Complex Credit Union within 24 months after issuance of the Subordinated Debt. The Board is proposing to grant credit unions that do not yet meet the eligibility requirements the opportunity to obtain preapproval if they can reasonably demonstrate they will become an eligible LICU or Complex Credit Union within the 24-month timeframe. A credit union's supporting analysis must indicate which of the eligibility criteria it anticipates meeting.

For an eligible credit union, the Board does not believe this proposed requirement will add any significant burden. For a credit union that is not yet eligible, this proposed requirement will allow the Board to determine if such credit union may reasonably become eligible within the required time period;

(2) The maximum aggregate principal amount of Subordinated Debt Notes and the maximum number of discrete issuances of Subordinated Debt Notes that the credit union is proposing to issue within the period allowed under subsection (k) of this section, which is one year from the approval of the initial application or Offering Document, depending on whether the investor is a Natural Person Accredited Investor or an Entity Accredited Investor. The Board is adopting the requirement from the paragraph (b)(1)(i) of the Current Secondary Capital Rule for the maximum aggregate amount and expanding this to include multiple issuances. The Board recognizes the potential efficiency gains for both the NCUA and the credit union in providing a preapproval decision authorizing a number of discrete issuances within the period allowed as doing so could be more convenient in meeting the credit union's goals while eliminating the prospect of multiple application reviews by the NCUA. If an initial application contemplates more than one issuance in the period allowed,[112] the credit union should include details of each of the planned issuance amounts including, but not limited to; the dollar amounts for each issuance, the estimated issuance dates and maturities, and any other contractual terms of the individual Subordinated Debt Notes. The credit union must ensure its aggregate principal amount of Subordinated Debt issuance does not exceed the maximum borrowing limit set forth in § 741.2 of the NCUA's regulations or cause a credit union to be in violation of any other applicable regulatory limits or requirements, or any written agreement or other approved plan with the NCUA.

As part of this requirement, the Board is requesting an analysis to support that a credit union has considered all other borrowing needs, as well as contingent liquidity needs, over the life of the planned Subordinated Debt issuance and has measured the aggregate amount of all borrowing activities. If a credit union's proposed Subordinated Debt issuance would increase the overall borrowing amounts to an unsafe level at any time over the life of the Subordinated Debt, the NCUA will deem this exposure to be unsafe and unsound.

(3) The estimated number of investors and the status of such investors (Natural Person Accredited Investors and/or Entity Accredited Investors) to whom the credit union intends to offer and sell the Subordinated Debt Notes. Paragraph (b) of the Current Secondary Capital Rule limits eligible investors in secondary capital to member or nonmember non-natural person investors.[113] The Current Secondary Capital Rule's limitation prevents the sale of secondary capital to consumers who could lack the ability to understand the risks associated with an uninsured secondary capital account.

The Board is proposing to revise the investor requirement from non-natural person investors to Accredited Investors in accordance with the provisions of Regulation D of the Securities Act.

The specific identification and certification of an Accredited Investor is a requirement of the proposed § 702.406(c). The certification requires a credit union receive an unambiguous, signed, one-page certification from any potential investor of a Subordinated Debt Note. Depending on whether the Subordinated Debt Notes are sold exclusively to Entity Accredited Investors or whether the potential investors include at least one Natural Person Accredited Investor determines if a credit union would need to have its Offering Documents approved for use by the NCUA.

The Board is proposing to require a credit union to specify the number of investors because this information will be used in the NCUA's evaluation of a credit union's analysis of the use of Subordinated Debt and its safe and sound management. Further, the Board is proposing to require credit unions to identify the classification of potential investors, because such classification will impact additional review steps in the proposed preapproval process.

(4) A statement identifying any outstanding Subordinated Debt and Grandfathered Secondary Capital previously issued by the credit union. The Board does not see this as a significant burden for credit unions because they have an incumbent risk management responsibility to track and manage their issuance. The Board is proposing to require this information because it will assist the NCUA in verifying if a credit union has prior experience with Subordinated Debt;

(5) A copy of the credit union's strategic plan, business plan, and budget, and an explanation of how the credit union intends to use the Subordinated Debt in conformity with those plans. The Board is clarifying the expectation that a credit union demonstrate how a planned issuance complies with each of its strategic, business, and budgeting plans consistent with its board's approved intentions. The NCUA issued a Supervisory Letter in September 2019 providing guidance to field staff regarding the authority of LICUs to offer Secondary Capital accounts.[114] The Supervisory Letter clarifies the framework the NCUA uses to analyze

[111] Proposed 702.403.

[112] Proposed 702.408(k).

[113] 12 CFR 701.34(b).

[114] Supervisory Letter No. 19–01, (Sept. 16, 2019), *available at https://www.ncua.gov/files/supervisory-letters/SL-19-01-evaluating-secondary-capital-plans.pdf.*

and approve or deny Secondary Capital plans.

With the proposed rule, the Board's expectation is that a credit union have a clear business objective for offering Subordinated Debt as envisioned and must explain how the additional costs and risks are acceptable and consistent with the credit union's business model. The plan must explain why the Subordinated Debt plan is consistent with a credit union's mission, budget, and strategic goals.

An eligible credit union must also explain how (when necessary) its strategic plan, business plan, and budget will need to be updated if the initial application to issue Subordinated Debt is approved.[115] As part of this endeavor, a credit union will need to make clear in its application that it has the expertise to safely and soundly manage the planned use(s) of Subordinated Debt or has budgeted to obtain the necessary expertise and will secure it before deploying an approved Subordinated Debt issuance. The Board believes this requirement will demonstrate a credit union's due diligence in developing a plan to issue Subordinated Debt or Grandfathered Secondary Capital.

(6) An analysis of how the credit union will provide for liquidity to repay the Subordinated Debt upon maturity of the Subordinated Debt. The Board sees this as a critical requirement of the initial application and notes that this is a requirement in the Current Secondary Capital Rule. Generally, Subordinated Debt plans involve a combination of new services and balance sheet activities, which introduce the potential to increase risk to earnings and capital if they are not adequately identified, measured, monitored, and controlled.

A credit union should also guard against future threats to its liquidity; this is of particular importance to the final determination about whether an application is a safe and sound endeavor. A credit union's ability to demonstrate it can reliably estimate liquidity needs and changes in its liquidity positions that result from Subordinated Debt over a multi-year horizon is necessary for both a credit union and the NCUA to understand the potential future threats.

A credit union that uses a leveraged growth strategy that significantly increases its credit, interest rate, and liquidity risks may find it has potentially excessive liquidity risk under some adverse scenarios. Excessive liquidity risk can arise from large increases in nonperforming loans and/or significant unrealized losses on investments. The credit union should understand how these risks arise, what drives such risks (for example, unmet growth targets, rising unemployment, recession, rapid changes in interest rates, etc.), and understand whether the risks could pose a threat when a Subordinated Debt obligation comes due.

A credit union's reliance on Subordinated Debt can be destabilizing if the credit union fails to replace the Subordinated Debt with net worth (typically by building its retained earnings) over time. If the Subordinated Debt matures during a time when it is experiencing financial distress and is in a weakened capital position, a credit union may not be able to replace Subordinated Debt with a new issuance. A market for such a credit union to issue new Subordinated Debt could disappear, leaving the credit union with an abrupt decline in loss-absorbing capital when it is most needed. These factors, and availability of investors at the time of potential reissuance, underscore why a credit union needs to have a reasonable and supportable projection of its future liquidity positions and earnings under a variety of plausible scenarios, including both optimistic and pessimistic assumptions, over measurement horizons that align with the credit union's expected activities.

The analysis must include an explanation of how Subordinated Debt is to be repaid and how the credit union's liquidity planning is utilizing a range of possible economic conditions or its initial application may be found deficient for safety and soundness reasons. The analysis should also incorporate the credit union's reliance on other funding alternatives.

(7) Pro Forma Financial Statements (balance sheet, income statement, and statement of cash flows), including any off-balance sheet items, covering at least five years. Analytical support for key assumptions and key assumption changes must be included in the application. Key assumptions include, but are not limited to, interest rate, liquidity, and credit loss scenarios. The Board notes that current § 701.34 requires a LICU to submit a minimum of two years of Pro Forma Financial Statements.[116] As discussed below, the Board is proposing to expand and clarify this requirement to ensure credit unions evaluate risks associated with issuing Subordinated Debt. Analytical support for key assumptions and the respective changes must be included in the application. Key assumptions include, but are not limited to, interest rate, liquidity, and credit loss scenarios.

The Board is proposing to extend the time horizon of the pro forma financial statements to five years compared to the Current Secondary Capital Rule of two years.[117] Given the minimum maturity requirement of five years[118] and the full amount available for Regulatory Capital treatment with a remaining maturity in excess of five years, the Board is proposing that the analysis supporting the pro forma financials be extended to the same five years. The Board is interested in receiving comments on this change.

The pro forma financial statements are a critical part of the credit union's analysis to show the effects of proposed transactions as if they actually occurred. Pro forma financial statements are a routine, yet essential, tool for documenting and testing the soundness of the assumptions a credit union relies on to project future performance. Subordinated Debt can have a significant impact on a credit union's revenues and expenses. Such borrowings are interest bearing and can have a higher cost than most forms of borrowing because they are uninsured and subordinate to all other claims. There are also other potential costs associated with a credit union's safe and sound oversight of Subordinated Debt (for example, staffing needs, expanded credit union systems, third-party assistance, and other costs associated with expanding services).

When developing pro forma financial statements, an eligible credit union should include projections of expected earnings in a variety of plausible scenarios, including both optimistic and pessimistic assumptions, over measurement horizons that align with the credit union's expected activities. In addition, analyses should address the sensitivity of any key underlying assumptions to reasonable changes in their amount/degree. Forecasting earnings and Regulatory Capital under different market risk factors is a sound practice for credit unions. To properly identify and measure the range of potential outcomes, a credit union needs to conduct scenario analysis to see how different key assumptions affect

[115] An eligible credit union does not need to explicitly incorporate the secondary capital plan into its board-approved strategic plan, business plan, and budget until the plan is approved by the NCUA, and then only to the extent it is necessary and material enough to warrant a change to the credit union's approved plans and budget.

[116] 12 CFR 701.34(b)(1)(v).

[117] *Id.*

[118] This is a requirement of both the current rule (12 CFR 701.34(b)(4)) and the proposed rule (proposed 702.404(a)(2)).

earnings and net worth for a variety of plausible scenarios.

A credit union needs to determine if the aggregate amount of Subordinated Debt, coupled with other planned uses identified in its plan is appropriate given the institution's risk-management processes and staff experience. Both the people and the processes should be prepared to handle the use of Subordinated Debt. A credit union's board of directors should ensure that the credit union can manage the volume and/or complexity of planned activities, especially in cases where such activities represent a material increase above what has been managed historically.

The NCUA expects a credit union to use sound practices when producing pro forma financial statements. When evaluating pro forma financials, the NCUA will consider, in particular, whether a credit union:

- Performed a cost/benefit analysis (including impact on balance sheet and operations) for any new products or services;
- Developed pro forma financials that take into account a range of plausible assumptions (optimistic and pessimistic) for both growth and portfolio performance metrics;
- Used reasonable and supportable underlying assumptions to generate scenario analyses;
- Used underlying assumptions and treatment of assets and liabilities consistently across the various supporting analyses. For example, a credit union should be consistent, where appropriate, across the various risk assessments and forecasts, such as projected activity levels, interest rates on assets and liabilities, measures of on-balance-sheet liquidity, and underlying assumptions about growth and performance of assets and liabilities (defaults, prepayments, maturities, replacement of maturities, etc.).
- Addressed its ability, under pessimistic scenarios, to respond to adverse event risks under its contingency funding plan strategies (for example, credit deterioration in a recessionary environment, unmet growth objectives, adverse rate environments, etc.).
- Modeled the risk characteristics of increased borrowings and/or adding higher risk loans and investments to portfolios (if relied on in the Secondary Capital plan) adequately for credit, liquidity, and interest rate risk purposes.

(8) A statement indicating how the credit union will use the proceeds from the issuance and sale of the Subordinated Debt. The Board has proposed to retain this requirement from the Current Secondary Capital Rule,[119] as a credit union must identify the purpose of issuing Subordinated Debt with specific reason(s), or strategy, behind the planned use of Subordinated Debt. The intended reason or strategy for using Subordinated Debt should be the primary basis for the maximum aggregate amount an eligible credit union states in its plan.

The complexity of Subordinated Debt strategies ranges from straightforward plans (for example, those that call for a one-for-one redeployment of proceeds into cash, loans, and/or investments of the same aggregate amount) to more complex plans that reflect a combination of additional borrowings and asset redeployments, increasing risk and/or the size of a credit union's balance sheet.

The Board recognizes various ways a credit union may use Subordinated Debt to its benefit, which include, but are not limited to:

- Restoring Regulatory Capital to a minimum desired level due to unexpected losses or strong and sustained asset growth that outpaced its ability to build Regulatory Capital through Retained Earnings;
- Increasing Regulatory Capital to a desired level relative to the level of risk inherent in its operations;
- Increasing Regulatory Capital to a desired level to support future growth or other member service initiatives; and
- Enhancing earnings by increasing the level of lending or investing a credit union could otherwise achieve.

The potential incremental increase in risk taken by issuing Subordinated Debt can be significant, and the NCUA generally views growth strategies that involve a high degree of leverage as higher risk.[120] When adopting such a strategy, a credit union should carefully assess its plan to identify any material risks to earnings and net worth, and properly identify and measure the degree of risk posed by the strategy;

(9) A statement identifying the governing law specified in the Subordinated Debt Notes and the documents pursuant to which the Subordinated Debt Notes will be issued. The Board is requesting the credit union to identify the governing law in respect of the Subordinated Debt Notes and the documents pursuant to which the Subordinated Debt Notes will be issued. The intent of this requirement is to ensure that an Issuing Credit Union has engaged with legal counsel qualified to render legal advice in that jurisdiction and has considered the venues where controversies, should they arise, could be litigated.

(10) A draft written policy governing the offer, and issuance, and sale of the Subordinated Debt, developed in consultation with Qualified Counsel. For this requirement, an Issuing Credit Union must include a draft written policy that governs the offer, issuance, and sale of the Subordinated Debt with its initial application.

The proposed rule would require an Issuing Credit Union to develop the policy in consultation with qualified legal counsel. Given the complexities and risks inherent in any securities offering, the Board believes it is important for an Issuing Credit Union to consult with legal advisors with expertise in securities offerings of the type contemplated by the proposed rule and the application of the related federal and state securities laws.

The draft policy required by paragraph (10) of the proposed rule specifies the *minimum* topics an Issuing Credit Union must assess and address for securities law compliance and risk management purposes, including its investor relations and communications plans. An Issuing Credit Union can, and should, include any other topic it determines is appropriate and/or necessary for a complete securities program in the draft policy. See section I. (E)(5) of this preamble for more information about considerations an Issuing Credit Union should address in its investor relations plans.

(11) A schedule that provides an itemized statement of all expenses incurred or expected to be incurred by the credit union in connection with the offer, issuance, and sale of the Subordinated Debt Notes to which the initial application relates, other than underwriting discounts and commissions or similar compensation payable to broker-dealers acting as placement agents. The schedule must include, as applicable, fees and expenses of counsel, auditors, any trustee or issuing and paying agent or any transfer agent, and printing and engraving expenses. If the amounts of any items are not known at the time of filing of the initial application, the credit union must provide estimates, clearly identified as such. Such a schedule must include, as applicable, fees and expenses of counsel, auditors, any trustee or issuing and paying agent or any transfer agent, and printing and engraving expenses. If the amounts of any items are not known at the time of filing of the initial application, a credit

[119] 12 CFR 701.34(b)(1)(ii).

[120] For the purposes of this letter, ''leverage'' refers to funding activity outside a credit union's customary deposit base.

union must provide estimates, clearly identified as such.

The Board is proposing this requirement to ensure an Issuing Credit Union takes into account the other potential costs to it associated with overseeing Subordinated Debt in a safe and sound manner (for example, staffing needs, expanded credit union systems, third-party assistance, and other costs associated with expanding services). This initial application requirement can be submitted as part of a budgeting plan in the initial application requirement number four, but must have the itemized statement of all expenses related to the issuance of Subordinated Debt.

(12) In the case of a New Credit Union, a statement that it is subject to either an approved initial business plan or revised business plan, as required by this part, and how the proposed Subordinated Debt would conform with the approved plan. Unless the New Credit Union has a LICU designation pursuant to § 701.34, it must also include a plan for replacing the Subordinated Debt with Retained Earnings before the credit union ceases to meet the definition of New Credit Union in § 702.2 of this part. The Board believes this will add minimal burden to a New Credit Union that is applying for Subordinated Debt authority, while also increasing the efficiency of the NCUA's review.

Unless a New Credit Union has a LICU designation pursuant to § 701.34(a), it must also include a plan for replacing the Subordinated Debt with Retained Earnings before the credit union ceases to meet the definition of New Credit Union in § 702.2. The Board is proposing this requirement to ensure that, when a New Credit Union no longer meets the definition of New Credit Union as defined in § 702.2, the credit union is either eligible to continue receiving Regulatory Capital treatment for its Subordinated Debt, or the credit union has a plan to replace the Subordinated Debt with Retained Earnings. Such a plan would ensure that, when a New Credit Union ceases to meet the definition of New Credit Union, it would remain safe and sound.

The Board notes that, without such a plan, when a New Credit Union's Subordinated Debt ceases to be counted as Regulatory Capital, it would immediately be subject to PCA.

(13) A statement describing any investments the credit union has in the Subordinated Debt of any other credit union, and the manner in which the credit union acquired such Subordinated Debt, including through a merger or other consolidation. Eligibility details can be seen in proposed § 702.403. The Board believes such a requirement will impose minimal burden on an applicant credit union, while aiding the NCUA in determining a credit union's compliance with § 702.403(b) of this proposed rule;

(14) A signature page signed by the credit union's principal executive officer, principal financial officer or principal accounting officer, and a majority of the members of its board of directors. Amendments to an initial application must be signed and filed with the NCUA in the same manner as the initial application. The Board is proposing this requirement to ensure that both a credit union's senior management and board are aware of and have approved the credit union's plan for issuing Subordinated Debt; and

(15) Any additional information requested in writing by the Appropriate Supervision Office. The Board is proposing this requirement to ensure the NCUA has adequate information to assess an applicant credit union's suitability to issue Subordinated Debt in a manner the agency determines to be safe and sound. The Board notes that this is not a new requirement; current § 701.34 states that the information required to be provided by a credit union is the *minimum* information necessary for the NCUA to review a secondary capital plan.[121]

Decision on Initial Application

The NCUA's review of an initial application to issue Subordinated Debt is intended to evaluate an eligible credit union's compliance with applicable laws and regulations and determine whether its application and documents represent a safe and sound endeavor for the credit union. The NCUA's analysis will be fact-specific to each credit union's situation at the time a credit union submits its initial application for approval.

With this proposed rule, the Board is increasing the review time of the initial application to 60 days from the Current Secondary Capital Rule's period of 45 days.[122] The Board is also proposing to remove the automatic approval provision in circumstances in which an applicant is not notified by the NCUA within the 60-day review period. The Appropriate Supervision Office may also extend the deadline for the review of the initial application in cases where it has requested additional documents or has determined that the application is incomplete. The Board believes the expanded requirements for initial applications are broader than the current rule requirements and that the enhanced description of diligence expectations will require a more thorough review by the Appropriate Supervision Office.

The Board is also proposing a conditional approval by which the Appropriate Supervision Office may approve the initial application with certain conditions. For example, the Appropriate Supervision Office may approve an aggregate principal amount less than the original request given the overall risk to the credit union. The NCUA may allow other conditional approvals such as maintaining a minimum level of net worth during the term of the Subordinated Debt, limiting the uses as prescribed in the initial application of the Subordinated Debt proceeds, or other limitations or conditions the NCUA deems necessary to protect the NCUSIF. The Appropriate Supervision Office will state the reasons to support the partial or conditional approval as part of the written determination. The Board notes that this is current agency practice with respect to secondary capital applications, and allows the Appropriate Supervision Office to adequately address concerns it may have with an application without unduly restricting a credit union's ability to issue Subordinated Debt.

Upon receiving an initial application, the Appropriate Supervision Office will evaluate a credit union's:

- Compliance with the proposed initial application requirements and all other NCUA regulations;
- Ability to manage and safely offer, issue, and sell the proposed Subordinated Debt; and
- Financial condition, operational condition, risk management practices and board oversight.

In addition, the Appropriate Supervision Office will evaluate the safety and soundness of the proposed use of the Subordinated Debt, and any other factors the Appropriate Supervision Office determines are relevant. This reflects the *minimum* of the information the Appropriate Supervision Office will evaluate.

Financial Condition

In evaluating a credit union's request to issue Subordinated Debt, the NCUA will evaluate a credit union's current and prospective financial condition. If a credit union is already experiencing serious financial difficulties, it may not have the financial or operational capacity to handle any additional challenges associated with Subordinated Debt, especially riskier endeavors. In particular, the NCUA will

[121] 12 CFR 701.34(b)(1).

[122] *Id.* 701.34(b)(2)).

evaluate a Subordinated Debt application to determine whether:

- Planned activities potentially result in a concentration of high-risk characteristics (credit, liquidity, or interest rate risk) that can pose an undue threat to the credit union's earnings or Regulatory Capital;
- Planned activities potentially worsen factors and trends that are contributing to existing safety and soundness concerns that have not yet been resolved; and
- A credit union has a reasonable exit strategy if its actual growth and financial performance were to fall short of necessary breakeven levels.

Operational Condition

In evaluating a credit union's initial application, the NCUA will also consider its existing knowledge of the credit union's current operational condition, its track record in managing new programs successfully, and prior experience (if any) with Subordinated Debt. A key consideration is whether a credit union has the resident knowledge, experience, expertise, and resources necessary to handle any higher levels of risk. This includes having personnel in the right positions, as well as having staff with adequate experience and knowledge.

The NCUA will also evaluate whether management and the board have demonstrated the ability to promptly and successfully address existing and potential problems and risks, and the potential need to recruit additional staff or outsource specific activities to a third party.

As part of its assessment of an initial application, the NCUA will determine if a credit union is venturing into new or higher-risk programs and activities that appear to be outside the institution's prior experience. A credit union should also assess this and explain how it intends to address any material gaps in the adequacy of technical staff and managerial oversight, and any lack of experience with the proposed strategies and activities in the application documents.

If a credit union is contemplating an increase in risk limits (and exposure) above its historical tolerance levels, it is critical that the board of directors has been adequately informed. The credit union board may also need to authorize changes in other board-approved policies. A credit union's application should clearly and conspicuously acknowledge the risk implications and reflect a commitment from the board that any necessary changes to policies, procedures, and personnel (or third-party support) will be approved.

The Appropriate Supervision Office will appraise the quality, capability, and leadership expertise of the individuals who guide and supervise a credit union. Credit unions should address the following as part of the initial application requirements, including (but not limited to):

- Does the credit union operate in compliance with laws and regulations?
- Does the credit union perform satisfactorily in key areas, such as its capital level, asset quality, earnings, liquidity, and interest rate risk management?
- Does the board of directors appropriately govern the credit union's operations, including the establishment of its strategies and the approval of budgets?
- Does the board understand the key risks facing the credit union?
- Are management decisions consistent with the direction set by the board of directors?
- Does management respond quickly to address shortcomings resulting from failed internal control processes, audits, and examinations?
- Does management implement policies and a culture that promotes the safe and effective operation of the credit union?
- Does management inform the board of its progress in executing strategies and performance against budget?

These questions speak to the capability of a credit union's leadership team, which are reflected in the Management (M) component of a credit union's CAMEL rating. The Appropriate Supervision Office uses this information when considering a request for approval of an initial application because a credit union's leadership is crucial in overseeing risk management for planned activities.

Risk-Management Processes and Credit Union Board Oversight

A credit union's board of directors is responsible for establishing an adequate risk management framework through its policies, procedures, and risk limits. Policies and practices need to be consistent with the credit union's business strategies and reflect the board's risk tolerance, taking into account the credit union's financial condition. In reviewing a credit union's application documents, the Appropriate Supervision Office needs to determine whether the credit union has or will take appropriate steps to address:

- Existing policies and procedures that will need to be updated, and/or new policies and procedures that will need to be adopted,
- The necessary staff expertise and qualifications to handle new activities are in place or will be retained, and
- The impact of any planned borrowing and increased balance sheet leverage will be integrated properly into the credit union's risk reporting and contingency funding plan.

While a credit union's board of directors is ultimately responsible for the credit union's strategic direction and policies, it is expected that they generally delegate the responsibility for executing and maintaining an appropriate risk management framework to senior management. Senior management then becomes responsible for both an initial assessment and the subsequent governance of Subordinated Debt activities.

Board members should ensure that the types and levels of risk inherent in any Subordinated Debt issuance are within their approved tolerances, and direct senior management to revise a plan when appropriate. Ultimately, the board should approve the initial application for submission to the NCUA. The board ensures that the credit union is staffed appropriately to handle the planned activities, and should understand the associated risks. They should remain informed by being briefed periodically by responsible staff. This is consistent with the NCUA's expectations for governance over any major risk activity.

The NCUA will also assess the extent of credit union management's involvement in the development of the application and whether a credit union relied on third-party vendors in supporting its analysis. The NCUA assesses the use of third parties when reviewing an application from a credit union that has engaged the services of a vendor to evaluate due diligence to determine whether any third-party agreements adequately preserve the credit union's legal and business interests.

Offering Document

Once an Issuing Credit Union has completed the application and approval process specified in paragraphs (a) through (c) of § 702.408, it may proceed with an offer, sale, and issuance of Subordinated Debt Notes, but only if it meets certain additional requirements regarding the form and content of the Offering Document it intends to use in connection with its planned offering. Paragraphs (d) through (g) of § 702.408 address the required use of Offering Documents, disclosure requirements specifying the minimum scope and coverage of disclosures to be included in Offering Documents, and the NCUA's

review process for Offering Documents intended to be used in offerings where the potential investors include one or more Natural Person Accredited Investors.

Consistent with the requirements of § 702.406(a), paragraph (d) of § 702.408 proposes that an Issuing Credit Union that has received initial approval of its application must prepare an Offering Document for each planned issuance of Subordinated Debt Notes. If potential investors in a planned offering of Subordinated Debt Notes include one or more Natural Person Accredited Investors, the Issuing Credit Union may only distribute an Offering Document to any potential investor after the Offering Document has been declared ''approved for use'' by the NCUA. Paragraph (d) also reiterates the requirement set forth in § 702.406(a) that an Offering Document be provided to each potential investor a reasonable time prior to any issuance and sale of Subordinated Debt Notes. The intent of the requirement is to ensure that potential investors receive the Offering Document with sufficient time to review the Offering Document before making a purchase decision and, if desired, consult with financial and/or legal advisors.

Requirements for All Offering Documents

Paragraph (e) of § 702.408 specifies the minimum scope and coverage of disclosures a credit union must include in its Offering Documents. The required disclosures include basic information about the Issuing Credit Union, the Subordinated Debt Notes, and any underwriter(s) or placement agent(s) engaged by the Issuing Credit Union to assist it in connection with the offering. The Offering Document must also include a discussion of risk factors that describes the material risks associated with the purchase of the Subordinated Debt Notes. The Board recognizes that these risks may vary from one Issuing Credit Union to another, so an Issuing Credit Union should tailor the required disclosures and discussion of material risk factors to address any special or distinctive characteristics of its business, field of membership, or geographic location that are reasonably likely to have a material impact on the Issuing Credit Union's future financial performance.

Paragraph (e) also requires that the Offering Document contain disclosures that cover the same items addressed in paragraphs (a) and (b) of § 702.405, which requires certain disclosure legends to appear on the face of the Subordinated Debt Note itself and certain additional disclosures to be included in the body of the Subordinated Debt Note. Those requirements are discussed in detail in ''—§ 702.405 Disclosures.'' Consistent with the requirements of § 702.405, paragraph (e) also states that Issuing Credit Unions are obligated to provide such further material information as may be necessary to make the required disclosures, in the light of the circumstances under which those disclosures have been made, not misleading. This obligation is consistent with the anti-fraud concepts embodied in the federal securities laws, including Rule 10b–5 under the Exchange Act, which apply to all offers and sales of securities.

Further, paragraph (e) of § 702.408 requires an Issuing Credit Union to provide details regarding the material terms of the Subordinated Debt Notes being offered. Because the terms of the Subordinated Debt Notes are likely to vary from one offering to another, the Board believes it is important that Issuing Credit Unions provide details regarding specific terms and provisions of the particular Subordinated Debt Notes being offered and sold in each instance. To that end, the disclosure is required to address the following, *at a minimum:*

(1) Principal amount, interest rate, payment terms, maturity date, and any provisions relating to prepayment of the Subordinated Debt Notes;

(2) All material covenants, both affirmative and negative, that govern the Subordinated Debt Notes, including the covenants required to be included pursuant to the proposed rule;

(3) Any legends required by applicable state law (which legends are in addition to any legends required to be included on the face of the Subordinated Debt Notes by the NCUA's regulations or any applicable state law);

(4) An additional legend in the form prescribed by the proposed rule that informs potential investors that securities regulators, including the SEC, and the NCUA have not passed on the merits of or approved the offering, or any of the terms of the Subordinated Debt Notes or the disclosures provided to potential investors by the Issuing Credit Union in the Offering Document; and

(5) That the offer and sale of the Subordinated Debt Notes have not been registered with the SEC under the Securities Act and the securities will be issued pursuant to exemptions from those registration requirements.

The Board notes that these types of legends are routinely included in securities Offering Documents, including those used by other types of financial institutions. Such legends serve to inform potential investors that the NCUA and other regulators do not assess the merits of any investment offering and, further, that the Issuing Credit Union is responsible for the disclosure in the Offering Document, whether or not the NCUA or any other regulator has reviewed the document.

Paragraphs (f) and (g) of § 702.408 outline certain important differences in the offering process for Subordinated Debt Notes that will be offered to any Natural Person Accredited Investors (whether the offering is directed only to Natural Person Accredited Investors or to both Natural Person Accredited Investors and Entity Accredited Investors) versus the offering process for sales that will be made solely to Entity Accredited Investors. The Board believes that Natural Person Accredited Investors, while sophisticated and able to assess the risks inherent in investing in Subordinated Debt Notes, can benefit from receiving an Offering Document that has been subject to review by the NCUA. On the other hand, the Board believes that Entity Accredited Investors are likely to be even more sophisticated investors than Natural Person Accredited Investors and, therefore, more capable of assessing the disclosures provided in the Offering Document, even one that has not been subject to the NCUA's review.

For offerings that will include Natural Person Accredited Investors as potential purchasers (no matter how many), an Issuing Credit Union must submit a draft of its Offering Document to the NCUA for review, complete the review process, and have the draft declared ''approved for use'' by the NCUA before its first use.[123] The purpose of the review process is to permit the NCUA to assess an Issuing Credit Union's compliance with the proposed rule's disclosure requirements and provide the Issuing Credit Union the opportunity to address the NCUA's questions and comments. Through this process, the Issuing Credit Union will provide any additional information requested by the NCUA and file any amendment(s) to its Offering Documents in response to the Agency's questions, comments, and concerns so as to allow the NCUA to reach a conclusion either to declare an Offering Document ''approved for use'' or to disapprove the Offering Document as inadequate.

[123] The NCUA expects that this review process will be an iterative one between NCUA staff and the Issuing Credit Union, similar to that between the OCC and national banks or between the SEC and parties seeking to have their registration statements declared effective by the SEC.

An Issuing Credit Union that issues Subordinated Debt Notes that will be offered exclusively to Entity Accredited Investors will not be required to submit a draft of its Offering Document to the NCUA for review and declaration as ''approved for use.'' Once the Issuing Credit Union has received the approval of its application under paragraph (c) of § 702.408 and has completed the drafting of an Offering Document that it affirms meets all the disclosure requirements included in the proposed rule, the Issuing Credit Union may use that Offering Document immediately, without the need to receive any ''approved for use'' declaration or other clearance from the NCUA.

In all instances, the proposed rule will require an Issuing Credit Union to file a copy of each Offering Document with the NCUA within two business days of its first use. This requirement ensures that the NCUA has contemporaneous notice of activity in the credit union Subordinated Debt market, and it generally aligns with filing requirements imposed by other federal regulators on issuances of securities.

Material Changes to Initial Application or Offering Documents

In the event that an Issuing Credit Union's circumstances materially change after the NCUA has approved an initial application, but before the closing of the relevant offer and sale of Subordinated Debt Notes, paragraph (h) requires an Issuing Credit Union to submit an amended application before it continues its Subordinated Debt Notes offering. In the amended application, the Issuing Credit Union must describe the event or change and receive approval from the NCUA before it may complete the offer and sale of the related Subordinated Debt Notes. This amended application filing and approval requirement applies to *any* offering—whether an offering made solely to Entity Accredited Investors or an offering that includes Natural Person Accredited Investors. An Issuing Credit Union must determine what constitutes a ''material change'' in its circumstances and whether that change warrants the submission of an amended application. The Board encourages credit unions to consult with legal and other professional advisors in making that determination, and further recognizes that credit unions may be guided by concepts of materiality found in the securities laws.

Similarly, if, after an Offering Document has been ''approved for use'' but before the closing of the relevant offer and sale of Subordinated Debt Notes, a material event arises or a material change in fact occurs that, individually or in the aggregate, results in an ''approved for use'' Offering Document containing any untrue statement of material fact, or omitting to state a material fact necessary in order to make statements made in the Offering Document not misleading in light of the circumstances under which they were made, paragraph (h) requires the Issuing Credit Union (and any person acting on its behalf) to discontinue any offers or sales of the Subordinated Debt Notes.

The proposed rule requires an Issuing Credit Union to revise the Offering Document and to submit any such amended Offering Document to the NCUA to be ''approved for use'' before the credit union resumes any offers or sales of Subordinated Debt Notes. If there is a material change in circumstances after an Issuing Credit Union has first used an Offering Document in an offer and sale of Subordinated Debt Notes made exclusively to Entity Accredited Investors, the proposed rule requires an Issuing Credit Union to determine, in accordance with applicable securities laws, whether such change warrants delivery of a revised Offering Document to potential investors. However, the Board reminds all Issuing Credit Unions of the continuing applicability of the anti-fraud provisions of the federal securities laws to in-progress offerings and the importance of considering whether continued use of an Offering Document that has not been amended to reflect material events or changes could be inconsistent with those provisions. An Issuing Credit Union must file any revised Offering Document with the NCUA within two business days of its first use.

The failure of an Issuing Credit Union to comply with the application amendment and/or Offering Document amendment requirements could result in the NCUA imposing administrative remedies available under the FCU Act, including prohibiting the Issuing Credit Union from issuing any additional Subordinated Debt for a specified period and/or determining not to treat the Subordinated Debt as Regulatory Capital.

Notification of Subordinated Debt Issuance

Paragraph (i) of § 702.408 proposes a notice and recordkeeping provision that would require an Issuing Credit Union to notify its Appropriate Supervision Office no later than ten business days after the closing of a Subordinated Debt Note issuance and sale and, as part of the notice filing, to submit documents relating to the issuance and sale to the NCUA, including, but not limited to:

- A copy of the executed Subordinated Debt Note;
- Any purchase agreement used;
- Any indenture or other transaction document used to issue the Subordinated Debt Notes;
- Copies of signed Accredited Investor Certificates from all investors;
- Documents (other than Offering Documents previously filed with the NCUA) provided to investors related to the offer and sale of the Subordinated Debt Note; and
- Any other material documents governing the issuance, sale or administration of the Subordinated Debt Notes.

Resubmissions

Paragraph (j) of § 702.408 provides that, if the NCUA provides a written adverse determination in respect of any application to offer and sell Subordinated Debt Notes and/or any Offering Document (if the offer and sale will be made to any Natural Person Accredited Investors), an Issuing Credit Union may amend such application or Offering Document to cure the deficiencies noted in the written determination and re-file such application or Offering Document with the NCUA in accordance with the rule's provisions. The Board notes that both the application and Offering Document approval processes may be iterative, at times requiring multiple submissions by an Issuing Credit Union before the NCUA provides its approval.

The Board notes, however, there could be instances when an Issuing Credit Union's application and/or Offering Document will not be approved by the NCUA. In such instances, the NCUA will provide a written determination specifying the reasons for the disapproval. Paragraph (j) also provides that an Issuing Credit Union may appeal the NCUA's decision in respect of any application and/or Offering Document under subpart A of part 746 of the NCUA's regulations.[124]

The Board proposes to expire an Issuing Credit Union's authority to issue Subordinated Debt Notes one year from the later of the date the Issuing Credit Union received NCUA approval of its initial application, if the proposed offering is to be made solely to Entity Accredited Investors, or the ''approved for use'' date of the applicable Offering Document if the proposed offering will include any Natural Person Accredited Investors. The Board specifically is requesting comment as to whether this

[124] 12 CFR part 746, subpart A.

one-year limit, which is intended in part to ensure that an Issuing Credit Union does not offer and sell Subordinated Debt Notes following a material change in the information on which the NCUA relied in approving the offer and sale of that Issuing Credit Union's Subordinated Debt Notes, unduly limits the marketability and functionality of Subordinated Debt Notes issuances.

The proposed rule provides the right for an Issuing Credit Union to file a written request for one or more extensions of the one-year limit with the Appropriate Supervision Office, provided any such request is filed at least 30 calendar days before the expiration of the applicable period noted above. A credit union's extension request must demonstrate good cause for an extension(s) and address whether such an extension will pose any material securities law implications.

Filing Requirements

Paragraph (l) of § 702.408 specifies the mechanics of filing required disclosure and transactional documents with the NCUA, while paragraph (m) notes that the NCUA may require filing fees to accompany certain filings. The Board notes that other federal regulators assess, or have reserved the right to assess, filing fees in connection with securities offerings under their jurisdiction.

The Board is requesting comment as to whether the imposition of filing fees would unduly limit the marketability and functionality of Subordinated Debt Notes issuances. Specifically, if the NCUA were to assess any such filing fees, on what should the NCUA base the fee structure and why? For example, should the NCUA follow the filing fee structures of other federal regulators and, if so, which regulators? Should LICUs and/or New Credit Unions be exempt from any filing fee requirements, or should they have a reduced fee structure?

9. § 702.409 Preapproval for FISCUs To Issue Subordinated Debt

The Board is proposing to include a section that details the application procedures specific to FISCUs. Under the Current Secondary Capital Rule, a FISCU must submit its secondary capital plan to both the NCUA and its SSA. The SSA is responsible for rendering a decision on such plan with the concurrence of the NCUA. The Board notes that this requirement has proved problematic in some instances. Specifically, some states do not have regulations that address the evaluation of secondary capital plans. In some cases, this has resulted in a conflict between the requirements of the Current Secondary Capital Rule and the applicable state laws of some SSAs.

Based on lessons learned from the Current Secondary Capital Rule and the fact Subordinated Debt stands in front of the NCUSIF as loss absorbing capital, the Board is proposing to change the approval process for FISCUs seeking to issue Subordinated Debt. Under this proposed rule, a FISCU must still submit the information required under § 702.408 to both the NCUA and its SSA. However, the Board is proposing to shift the responsibility for rendering a decision from the states to the NCUA. As such, the proposed rule states that the NCUA will render all decisions on FISCU Subordinated Debt applications, but will only approve a Subordinated Debt application after obtaining the concurrence of the credit union's SSA. The Board believes this maintains the supervisory authority of the SSA while shifting the responsibility for rendering decisions to the NCUA. The Board notes that while it is changing the process for FISCU application approvals, it is not changing the current process for approvals of FISCU applications to prepay Subordinated Debt. As discussed in section II. (C)(11) of this preamble, a FISCU seeking approval to prepay Subordinated Debt must still seek approval from its SSA before submitting an application to prepay to the NCUA.

In addition, the Board is considering adding a requirement in a final Subordinated Debt rule that would require a FISCU to submit with its application an attestation that it has consulted with its SSA and the Subordinated Debt it is proposing to issue is permissible under state law. The Board believes this requirement may be useful to and efficient for both the NCUA and a FISCU. Such a requirement would ensure a FISCU is permitted to issue Subordinated Debt under state law before the credit union and the NCUA expend resources on the credit union's application. The Board invites feedback on this requirement.

This section of the proposed rule also states that the NCUA will notify a FISCU's SSA before issuing a decision to ''approve for use'' a FISCU's Offering Document and any amendments thereto, under proposed § 702.408. Because rendering a decision to ''approve for use'' an Offering Document is an iterative process, the Board is not proposing to seek the SSA's concurrence on this decision. The Board believes that obtaining such concurrence may delay the review process and negatively impact credit unions, while providing little utility to the supervision by an SSA. The Board believes that concurrence in the decision to approve a FISCU's application and notice of a decision to ''approve for use'' a FISCU's Offering Document strikes a balance between involvement by the appropriate SSA and the NCUA's role as insurer.

The Board is also proposing to include in this section a requirement stating that if the Appropriate Supervision Office has reason to believe that a Subordinated Debt issuance by a FISCU could subject that FISCU to federal income taxation, the Appropriate Supervision Office may require the FISCU to provide:

(1) A written legal opinion, satisfactory to the NCUA, from nationally recognized tax counsel or letter from the Internal Revenue Service indicating whether the proposed Subordinated Debt would be classified as capital stock for federal income tax purposes and, if so, describing any material impact of federal income taxes on the FISCU's financial condition; or

(2) A Pro Forma Financial Statement (balance sheet, income statement, and statement of cash flows), covering a minimum of five years, that shows the impact of the FISCU being subject to federal income tax.

This proposed section further provides that, should such information be required, a FISCU may determine in its sole discretion whether the information it provides is in the form articulated in either (1) or (2) above.

The Board notes that FISCUs are exempt from federal income taxation under § 501(c)(14) of the Internal Revenue Code.[125] Conversely, FCUs are exempt from federal income taxation under the FCU Act.[126] Section 501(c)(14) of the Internal Revenue Code exempts state-chartered credit unions that are operating on a not-for-profit basis, organized without capital stock, and operating for mutual purposes. While FCUs may only permissibly issue Subordinated Debt under their borrowing authority, it is possible that a FISCU, under state law, could issue an instrument that otherwise meets that requirements of subpart D of part 702, but may have a structure akin to capital stock. The Board is therefore proposing a backstop provision to protect the safety and soundness of FISCUs that may propose to issue an instrument that an Appropriate Supervision Office has reason to believe could be treated as capital stock.

In such limited situations, the Board is proposing to require a FISCU to demonstrate that the instrument will

[125] IRC 501(c)(14).

[126] 12 U.S.C. 1768.

either not be treated by the Internal Revenue Service as capital stock or that, if an instrument is treated as capital stock (thereby subjecting the FISCU to federal income taxation), the associated costs can be safely absorbed by the FISCU. While the Board expects there to be few instances in which this provision is invoked, if any, its inclusion in the proposed rule protects against all possible circumstances to ensure the ongoing safety and soundness of FISCUs that issue Subordinated Debt. The Board believes this proposed provision would ensure that a FISCU conducts thorough due diligence on the ramifications of issuing an instrument that could subject it to federal income taxation, and demonstrate that either such instrument will not subject the credit union to taxation or that it has the financial capabilities to remain in a safe and sound condition with the added expense of federal income taxation.

10. § 702.410 Interest Payments on Subordinated Debt

In purchasing Subordinated Debt from credit unions, investors face certain regulatory uncertainties. For example, the FCU Act and the NCUA's regulations provide authority to prohibit dividend or interest payments in specified scenarios. In its PCA regulations, the Board specifically lists restrictions on the payment of interest on secondary capital as an option for ''Critically Undercapitalized'' credit unions.[127] Even for a credit union with a more favorable net worth classification, PCA authorities allow the Board to ''restrict or require such other action as [it] determines will carry out the purpose of [the PCA provisions] better than'' the specifically listed authorities.[128] These discretionary authorities may make it difficult for investors to gauge risks related to Subordinated Debt purchases, resulting in more extensive disclosure requirements and higher costs for Issuing Credit Unions.

To address this investor uncertainty, the Board is considering multiple approaches. First, the Board is proposing provisions that would prohibit interest payments on Subordinated Debt for any ''Critically Undercapitalized'' credit union. The proposed rule would make this mandatory for Subordinated Debt (it is currently a specified discretionary authority under the NCUA's regulations).[129] This approach aligns with banking law,[130] which prohibits interest on subordinated debt for ''Critically Undercapitalized'' banks, except where the institution requests and receives regulatory approval. Standardizing this preclusion is consistent with what the market is accustomed to for subordinated debt of national banks. The Board has included proposed disclosures that would be required to address this risk of PCA requirements (see section II. (C)(5) of this preamble).

Second, the Board is proposing a safe harbor for interest payments on Subordinated Debt for any credit union in a net worth category more favorable than ''Critically Undercapitalized.'' Under this safe harbor, the NCUA would not prohibit interest payments on Subordinated Debt for such credit unions, provided that a list of criteria are satisfied (see proposed § 702.410(c)). These qualifying criteria provide that a credit union must have issued the Subordinated Debt in an arms-length transaction, in the ordinary course of business, with no evidence of intent to hinder or defraud the Issuing Credit Union or its creditors. In addition, the Subordinated Debt must comply with the proposed issuance requirements. The proposed rule also clarifies that the safe harbor neither waives nor affects other authorities the NCUA may exercise in any of its regulatory, conservatorship, or liquidating agent capacities.

The Board invites comment on whether it should retain the proposed interest safe harbor or eliminate it. While the safe harbor could make debt pricing more favorable for Issuing Credit Unions, such an impact remains to be seen. Conversely, such a safe harbor could cost the NCUSIF, as the Board may be unable to limit interest payments for Issuing Credit Unions subject to PCA.

In considering the interest safe harbor, the Board notes that neither the FDIC nor the OCC provide similar relief in connection with the subordinated debt of their regulated banking institutions. While the scope of this safe harbor would be unique in the subordinated debt market, the Board believes it could make Subordinated Debt issued by Issuing Credit Unions a more viable product at a lower cost. In hopes of increasing viability, the Board is willing to consider this interest safe harbor and welcomes comment on this issue.

11. § 702.411 Prior Written Approval To Prepay Subordinated Debt

Consistent with the Current Secondary Capital Rule, the proposed rule requires a credit union to receive prior written approval from the Appropriate Supervision Office to prepay Subordinated Debt. However, the Board is proposing to expand a credit union's authority to prepay any portion of the Subordinated Debt. Under the Current Secondary Capital Rule, only the portion of the secondary capital that no longer counts as Regulatory Capital may be approved for prepayment. The Board believes this proposed change will provide credit unions additional flexibility to effectively manage issued Subordinated Debt.

In addition, the Board notes that if the terms of the Subordinated Debt Note allow prepayment (call option), the prepayment option and the requirements of this proposed section of the regulation must clearly be disclosed in the Subordinated Debt Note. The Board is adding this requirement to ensure investors receive adequate disclosure of a credit union's option to prepay the issued Subordinated Debt and the regulatory requirements related to such prepayment.

To obtain approval to prepay, the proposed rule requires a credit union to submit an application to the Appropriate Supervision Office. To provide regulatory relief, the proposed requirements of the application are less prescriptive than the Current Secondary Capital Rule, and more comparable to the OCC's subordinated debt regulations.[131] To request early redemption of secondary capital, the Current Secondary Capital Rule requires a LICU to demonstrate to the NCUA that the:[132]

- LICU will have a post-redemption net worth classification of ''Adequately Capitalized'' per part 702 of this chapter;
- Discounted secondary capital has been on deposit for at least two years;
- Discounted secondary capital will not be needed to cover losses prior to maturity;
- LICU's books and records are current and reconciled;
- Proposed redemption will not jeopardize other current sources of funding; and
- LICU's board of directors authorized the request to redeem.

Under this proposal, a credit union must provide an application for

[127] As discussed in section II. (B)(3) of this preamble, the Board is proposing to make cohering changes to this section of the PCA regulations to address Grandfathered Secondary Capital and Subordinated Debt.

[128] 12 CFR 702.107; 702.108.

[129] *Id.* 702.109(b)(11).

[130] 12 U.S.C. 1831o(h)(2).

[131] 12 CFR 5.47(f)(2)); (g)(1)(ii).

[132] *Id.* 7022.34(d)(1).

prepayment to the Appropriate Supervision Office. However, the required items are a change from the Current Secondary Capital Rule. The Board believes that normally, the proposed required items for prepayment should provide the Appropriate Supervision Office with the appropriate information to make a sound decision on prepayment. A credit union must provide, *at a minimum,* a copy of the Subordinated Debt Note (including any agreements reflecting the terms and conditions of the Subordinated Debt) and an explanation of why the credit union believes it still would hold an amount of capital commensurate with its risk post redemption. The Board believes this information will allow the Appropriate Supervision Office to adequately determine the safety and soundness of prepaying Subordinated Debt.

The Board notes, however, that this proposed rule clarifies that the information discussed above is the *minimum* information required in an application for approval to prepay Subordinated Debt, and that an Appropriate Supervision Office may request additional information if needed. The OCC's subordinated debt regulations have similar flexibility. Allowing a request for additional information ensures the Appropriate Supervision Office has all the relevant information to make an appropriate decision regarding the prepayment.

FISCU Application To Prepay Subordinated Debt

Before submitting an application seeking prepayment authority to the NCUA, a FISCU must obtain written approval from its SSA. This process differs from the proposed original issuance approval process under § 702.409 as discussed in section II. (C)(9) of this preamble, which would allow for simultaneous submission to the NCUA and SSA. The proposed requirement of prior approval by the SSA before a credit union applies to the NCUA for prepayment approval provides the SSA the first review and opportunity to render a decision on a FISCU's application to prepay, and acknowledges the SSA's role with safety and soundness relative to FISCUs. The NCUA's role as final approver reflects the nature of Subordinated Debt as protection for the NCUSIF.

NCUA Decision on Application To Prepay Subordinated Debt

The Board is proposing to retain a 45-day timeline to review and respond to a prepayment request. However, the proposed rule would make one change to the approval process. Currently, if an Issuing Credit Union does not receive a response from the Appropriate Supervision Office within 45 days, the request to prepay is deemed approved. Under the proposed rule, automatic approvals no longer occur. This change is consistent with the removal of automatic approvals for the proposed original issuance approval process as discussed in section II. (C)(8).

12. § 702.412 Effect of a Merger or Dissolution on the Treatment of Subordinated Debt as Regulatory Capital

Paragraph (b)(9) of the Current Secondary Capital Rule states that ''. . . in the event of merger or other voluntary dissolution of a LICU, other than merger into another LICU, the secondary capital accounts will be closed and paid out to the account investor to the extent they are not needed to cover losses at the time of merger or dissolution.'' [133] The Board is proposing to retain the general framework in current paragraph (b)(9), but to make several adjustments to account for the additional types of credit unions that may issue Subordinated Debt and provide additional flexibility to a resulting credit union in a merger.

Specifically, the Board is proposing to permit the acquisition of Subordinated Debt in a merger or assumption transaction regardless of the classification of the resulting credit union. Currently, this is only permissible if both the resulting and merging credit unions are LICUs. The Board believes this change will provide additional flexibility to credit unions, while, as discussed in the next paragraph, maintaining controls on the Regulatory Capital treatment of Subordinated Debt. The Board also notes that this provision could be a benefit to investors, as the Subordinated Debt could remain outstanding and earning interest versus being repaid.

Under this proposed rule, the Regulatory Capital treatment of any acquired Subordinated Debt would be contingent on several factors. First, if the resulting credit union is a LICU, Complex Credit Union, or New Credit Union, it may acquire the Subordinated Debt of the merging credit union, and the non-discounted portion of such Subordinated Debt will continue to be treated as Regulatory Capital. Irrespective of the foregoing, if the resulting credit union is not a LICU, the acquired Subordinated Debt will not count toward that credit union's Net Worth. Acquired Subordinated Debt will only count toward a resulting credit union's Net Worth if such credit union is a LICU.

If the resulting credit union is not a LICU, Complex Credit Union, or New Credit Union, the Board is proposing to provide two options for addressing the assumed Subordinated Debt. First, if permitted by the terms of the Subordinated Debt Note, the resulting credit union can apply to the NCUA for approval to prepay the Subordinated Debt. If the NCUA grants such approval, the Subordinated Debt may be repaid in accordance with the requirements related to prepayment, discussed in section II. (C)(11) of this preamble.

Second, the resulting credit union may continue to hold the acquired Subordinated Debt, but such Subordinated Debt will not be treated as Regulatory Capital unless the resulting credit union becomes a LICU, Complex Credit Union, or New Credit Union. In the event the resulting credit union becomes one of the aforementioned types of credit unions, the Board is proposing to allow any non-discounted portion of acquired Subordinated Debt to immediately be treated as Regulatory Capital upon the resulting credit union being designated as a LICU, Complex Credit Union, or New Credit Union. If the resulting credit union never becomes a credit union eligible to receive Regulatory Capital treatment of the acquired Subordinated Debt, such Subordinated Debt may continue to be held by the resulting credit union or prepaid, in accordance with the prepayment section of this proposed rule, but, in either case, such Subordinated Debt will never receive Regulatory Capital treatment. Further, acquisition of Subordinated Debt in a merger does not permit an ineligible credit union to issue its own Subordinated Debt. This proposed rule only allows an ineligible credit union to hold acquired Subordinated Debt until maturity.

The Board believes the proposed treatment of acquired Subordinated Debt is consistent with the safety and soundness goals of this proposed rule and provides resulting credit unions with flexibility to exercise business judgment in determining how to proceed with acquired Subordinated Debt.

The Board is also proposing to address voluntary liquidations in this section of the rule. Specifically, the Board is proposing to permit a credit union to prepay Subordinated Debt as part of a voluntary liquidation. Any such prepayment must, however, be conducted in accordance with the prepayment requirements of the proposed rule (see § 702.411). The

[133] *Id.* 34(b)(9).

Board believes it is appropriate to require a credit union to apply for approval to prepay Subordinated Debt in a voluntary liquidation, as it is incumbent upon the NCUA to determine if the Subordinated Debt will or could be needed to cover any losses that a credit union may incur during liquidation.

13. § 702.413 Repudiation Safe Harbor

The FCU Act provides multiple authorities to the Board as conservator or liquidating agent that could affect Subordinated Debt. For example, in both conservatorships and liquidations the FCU Act provides the Board the authority to repudiate contracts.[134] The Board can also enforce contracts that might otherwise have provided for default, acceleration, or the exercise of other rights upon insolvency or appointment of a conservator or liquidating agent. Any of these authorities could affect a potential investor's evaluation of an Issuing Credit Union's Subordinated Debt.

With respect to repudiation, the Board, including its lawfully appointed designee, has the authority to repudiate any contract within a reasonable period following appointment as conservator or liquidating agent for an insured credit union. This authority is subject only to a conservator's or liquidating agent's discretionary decision that the contract is both burdensome and that repudiation will promote orderly administration of a credit union's affairs. Repudiation generally limits recourse by introducing limits on both time and type of recourse. The time for determination of damages is the date of appointment of the conservator or liquidating agent and the type of recourse is limited to ''actual direct compensatory'' damages. Punitive or exemplary damages, damages for lost profit or opportunity, and damages for pain and suffering are excluded from the scope of actual direct compensatory damages, and case law further defines the boundaries of permitted damages. Permissible damages elements that are approved as a claim (after proceeding through the administrative claims process) become eligible for payment at their related priority under 12 CFR 709.5(b), subject to availability of funds.

Thus, a conservator's or liquidating agent's repudiation authority is broad and could affect a Subordinated Debt investor's rights to payment. While the extent of impact could vary substantially based on individual circumstances, the Board believes the exercise of this power in connection with Subordinated Debt would have the least consequence in involuntary liquidation scenarios. In such a scenario, a credit union will generally be insolvent (or at least ''Critically Undercapitalized''), and only in unusual cases will funds be available to fully pay approved claims beyond those of the NCUSIF and uninsured shareholders.[135] In many cases Subordinated Debt may have been entirely extinguished to cover deficits before a liquidation occurs. Therefore, the Board believes the issue of repudiating Subordinated Debt contracts in liquidation contexts is unlikely to make a measureable difference to any Subordinated Debt purchaser.

On the other hand, the conditions under which the Board may invoke its conservatorship authorities are broader than those that apply to liquidations. They include a credit union's consent, violation of an order to cease and desist, or concealment of books and records, among others. In the case of conservatorships, a conservator has the power to repudiate Subordinated Debt contracts in situations where a credit union remains solvent. Such repudiation, if exercised, could substantially affect the timing of a holder's receipt of principal, along with interest payments that may have otherwise continued. While conservatorships are rare, the possibility of such action creates additional uncertainty regarding a purchaser's ability to value the Subordinated Debt at the time of purchase. This additional uncertainty could, in turn, affect the cost and marketability of Subordinated Debt issued under the proposed rule.

To address this uncertainty, the Board has included a safe harbor in the proposed rule by which it would prevent the conservator's exercise of repudiation authority when a conserved credit union is solvent. Like the proposed safe harbor related to interest payments, the proposed rule establishes a list of criteria that, if satisfied, would qualify a Subordinated Debt instrument for the repudiation safe harbor. To qualify, a credit union must have issued the Subordinated Debt in an arms-length transaction, in the ordinary course of business, with no evidence of intent to hinder or defraud the Issuing Credit Union or its creditors. In addition, the Subordinated Debt must comply with all of the proposed requirements of the proposed rule. The safe harbor described in the proposed rule also clarifies that it neither waives nor affects other authorities the NCUA may exercise in any of its regulatory, conservatorship, or liquidating capacities.[136] In liquidation contexts, the safe harbor would not apply, for the reasons stated above.

The Board invites comment on whether it should retain the proposed repudiation safe harbor or eliminate it. While the safe harbor could make Subordinated Debt pricing more favorable for credit unions, such an impact remains to be seen. Conversely, the safe harbor could cost the NCUSIF, as the Board may be unable to repudiate Subordinated Debt contracts that a conserved credit union is unable to service, creating or increasing financial distress.

14. § 702.414 Regulations Governing Grandfathered Secondary Capital

As discussed in section II. (C)(1) of this preamble, the Board is proposing to grandfather secondary capital issued by LICUs before the effective date of any final Subordinated Debt rule. For clarity and ease of use, therefore, the Board is proposing to include the Current Secondary Capital Rule in subpart D as § 702.414, with minor modifications. The Board believes this proposed change would aid LICUs in quickly finding the rules applicable to Grandfathered Secondary Capital, while maintaining the Board's objective to house all capital related rules for natural person credit union in one part. The Board is also proposing to delete the Current Secondary Capital Rule to avoid having two nearly identical rules on secondary capital.

The Board notes that, under this proposed rule, there would be some technical differences between the Current Secondary Capital Rule and proposed § 702.414. Such differences serve to clarify that a LICU may only follow the rules in this section for Grandfathered Secondary Capital, and that the proposed rule does not permit a LICU to continue offering secondary capital under the Current Secondary Capital Rule.

In addition, proposed § 702.414(a)(2) would include a statement indicating that any issuances of secondary capital not completed by the effective date of a final Subordinated Debt rule are, as of such effective date, would be subject to the requirements applicable to

[134] 12 U.S.C. 1787(c).

[135] 12 CFR 709.5(b)(6).

[136] These criteria are similar to those that apply to assets transferred in connection with a securitization or participation, as set forth in 12 CFR 709.9. In the securitization and participation context, the NCUA's safe harbor in 12 CFR 709.9 does not extend to repudiation itself, but is limited to the reclamation of related collateral when the Board exercises the repudiation power. Unlike the safe harbor for securitization and participations, the proposed safe harbor would prohibit repudiation altogether in the circumstances described.

Subordinated Debt discussed elsewhere in this preamble. The Board is proposing this requirement to ensure all issuances of secondary capital not yet completed would be subject to the requirements of this proposed rule. The Board is, however, requesting specific comment on what it should set as the implementation date for such provision. While the Board wants to ensure future issuances of secondary capital are subject to the requirements of this rule, it is not intending to negatively impact LICUs that are close to issuing secondary capital under a secondary capital plan that was approved before the effective date of a final Subordinated Debt rule. The Board encourages commenters to identify what would be a reasonable amount of time to allow LICUs to conduct such issuances.

This proposed section also makes a minor technical correction in proposed § 702.414(b)(1), which instructs a LICU how to properly account for secondary capital on its balance sheet. The Current Secondary Capital Rule requires a LICU to record secondary capital as equity. This is, however, inaccurate, as U.S. GAAP requires such instrument to be accounted for as debt rather than equity. As such, this proposed change merely reflects the proper accounting treatment of secondary capital, and is not a substantive change.

D. Part 709—Involuntary Liquidation of Federal Credit Unions and Adjudication of Creditor Claims Involving Federally Insured Credit Unions in Liquidation

1. § 709.5 Payout Priorities in Involuntary Liquidation

The Board is proposing to make conforming changes to the section of part 709 that addresses payout priorities in involuntary liquidations. Currently, § 709.5(b) lists secondary capital as the last priority for payout when a LICU is liquidated. In accordance with the FCU Act, secondary capital must be subordinate to all other claims against a LICU, including claims of other creditors, the NCUSIF, and shareholders.[137] Because this is a statutory provision, the Board is required to maintain Subordinated Debt issued by LICUs as the last in the list of payout priorities.

Under the proposed rule, Subordinated Debt for LICUs, Complex Credit Unions, and New Credit Unions will be the same instrument and subject to the same regulation. Secondary capital and proposed Subordinated Debt also both function as capital that is subordinate to all claims, including those by the NCUSIF, general creditors, and shareholders. As such, the Board believes it is appropriate to include Subordinated Debt in the last payout priority when a natural person, federally insured credit union is liquidated. Further, to address Grandfathered Secondary Capital, discussed in section II. (C)(1) of this preamble, the last payout priority will clarify that such Grandfathered Secondary Capital continues to remain the last payout priority position.

E. Part 741—Requirements for Insurance

The Board is proposing to make several changes to part 741 to ensure consistency with the other proposed changes in this rule. Specifically, the Board is proposing to amend § 741.204 and add new §§ 741.226, and 741.227.

1. § 741.204 Maximum Public Unit and Nonmember Accounts, and Low-Income Designation

Currently, § 741.204 includes the rules and requirements for low-income FISCUs. Among these requirements is a discussion of how a low-income FISCU can apply for authority to issue secondary capital. Because secondary capital will, under the proposed rule, be included as part of Subordinated Debt and will no longer be included in § 701.34, the Board is proposing to make clarifying amendments to this section.

Specifically, the Board is proposing to change the cross reference in this section to proposed § 702.414 and clarify that this section only applies to secondary capital issued before the effective date of any final Subordinated Debt regulation. As discussed in the next section of this preamble, the Board is proposing to add a section to part 741 to address the requirements that apply to a FISCU seeking approval to issue Subordinated Debt after the effective date of a final Subordinated Date rule.

2. § 741.226 Subordinated Debt

The Board is proposing to add a new section in subpart B of part 741 to instruct a FISCU to comply with the requirements of subpart D of part 702 before it may issue Subordinated Debt. The new proposed section also clarifies that a FISCU may only issue Subordinated Debt in accordance with subpart D of part 702 if such issuance complies with applicable state law and regulation. As discussed in section II. (C)(9) of this preamble, subpart D to part 702 includes application procedures specific to FISCUs. This proposed new section is clarifying in nature and does not result in a substantive change for FISCUs.

3. § 741.227 Loans to Other Credit Unions

The Board is proposing to include a new section in part 741 that would make the limitation on loans to credit unions included in proposed new § 701.25 applicable to all federally insured credit unions. As discussed in section II. (A)(1) of this preamble, the Board is proposing a new § 701.25 to address safety and soundness concerns with loans between credit unions. Because the concerns discussed in relation to § 701.25 are not unique to FCUs, the Board believes it is prudent to extend the requirements of that section to all credit unions.

III. Regulatory Procedures

A. Paperwork Reduction Act

The Paperwork Reduction Act of 1995 (PRA) applies to rulemakings in which an agency by rule creates a new paperwork burden on regulated entities or modifies an existing burden (44 U.S.C. 3507(d)). For purposes of the PRA, a paperwork burden may take the form of a reporting, recordkeeping, or a third-party disclosure requirement, referred to as an information collection.

NCUA is seeking comments on the information collection requirement of a proposed new subsection to part 702 that addresses requirements and regulatory capital treatment of subordinate debt. A request for a new OMB control number has been submitted to the Office of Management and Budget (OMB) for review and approval. The request contains information collection requirements associated with applying for authority to issue subordinated debt, credit union eligibility to issue subordinate debt, prepayments and disclosures. These information collection requirements apply to low-income credit unions (LICUs), complex and new credit unions.

The initial application requirement to issue subordinated debt can be found in § 702.408(b) and is estimated to impact 25 credit unions annually and is estimated to take 100 hours per respondent. Following approval of the initial application, an issuing credit union must prepare and submit for each issuance of subordinated debt, an offering document for NCUA approval. This offering document is estimated to take each of the 25 issuing credit unions 40 hours to prepare. Additional reporting requirements covered under §§ 702.406, 702.408, 702.409, 702.411, and 702.414 involve requests for additional information, extensions, and prepayments. An issuing credit union must provide a copy of the approved

[137] 12 U.S.C. 1757a(c)(2)(B)(ii); 1790d(o)(2)(C)(ii).

offering document to each investor (§ 701.408(d)), and a FISCU must also provide a copy to its state supervisory authority (§ 702.409(a)); averaging an hour per respondent. Recordkeeping requirements to maintain records prescribed by this proposed rule is estimated to average 15 minutes per record. Proposed new § 701.25(b) requires federally insured credit unions to establish a written policies for making loans to other credit unions. This recordkeeping requirement to retain this policy update is estimated to average 30 minutes and would impact 3,300 credit union.

Information collection requirement reported under § 702.414 are currently cleared under OMB control number 3133–0140, Secondary Capital for Low-Income Designated Credit Unions. This burden will be consolidated under this request for a new OMB control number and 3133–0140 will be discontinued upon prolongation of this rule.

OMB Control Number: 3133–NEW.

Title of information collection: Subordinated Debt.

Estimated number of respondents: 3,300.

Estimated number of responses per respondent: 1.12.

Estimated total annual responses: 3,703.

Estimated burden per response: 1.53.

Estimated total annual burden: 5,662.

The NCUA invites comments on: (a) Whether the proposed collection of information is necessary for the proper performance of the functions of the agency, including whether the information will have practical utility; (b) the accuracy of the agency's estimate of the burden of the proposed collection of information, including the validity of the methodology and assumptions used; (c) ways to enhance the quality, utility and clarity of the information to be collected; and (d) ways to minimize the burden of the collection of information on those who are to respond, including through the use of appropriate automated, electronic, mechanical, or other technological collection techniques or other forms of information technology.

All comments are a matter of public records. Comments submitted in response to this document will be summarized and included in the request for OMB approval. Comments regarding the information collection requirements of this rule should be sent to (1) Dawn Wolfgang, NCUA PRA Clearance Officer, 1775 Duke Street, Alexandria, VA 22314, Suite 6032, or email at *PRAComments@ncua.gov* and the (1) Office of Information and Regulatory Affairs, Office of Management and Budget, Attention: Desk Officer for NCUA, New Executive Office Building, Room 10235, Washington, DC 20503, or email at *OIRA_Submission@OMB.EOP.gov.*

B. Executive Order 13132

Executive Order 13132 encourages independent regulatory agencies to consider the impact of their actions on state and local interests. The NCUA, an independent regulatory agency as defined in 44 U.S.C. 3502(5), voluntarily complies with the executive order to adhere to fundamental federalism principles.

This proposed rule does not have substantial direct effects on the states, on the relationship between the national government and the states, or on the distribution of power and responsibilities among the various levels of government. The NCUA has therefore determined that this final rule does not constitute a policy that has federalism implications for purposes of the executive order.

C. Assessment of Federal Regulations and Policies on Families

The NCUA has determined that this rule will not affect family well-being within the meaning of section 654 of the Treasury and General Government Appropriations Act, 1999, Public Law 105–277, 112 Stat. 2681 (1998).

List of Subjects

12 CFR Part 701

Advertising, Aged, Civil rights, Credit, Credit unions, Fair housing, Individuals with disabilities, Insurance, Marital status discrimination, Mortgages, Religious discrimination, Reporting and recordkeeping requirements, Sex discrimination, Signs and symbols, Surety bonds.

12 CFR Part 702

Credit unions, Reporting and recordkeeping requirements.

12 CFR Part 709

Claims, Credit unions.

12 CFR Part 741

Bank deposit insurance, Credit unions, Reporting and recordkeeping requirements.

By the NCUA Board on January 23, 2020.

Gerard Poliquin,

Secretary of the Board.

For the reasons discussed above, the NCUA is proposing to amend 12 CFR parts 701, 702, 709, and 741 as follows:

PART 701—ORGANIZATION AND OPERATION OF FEDERAL CREDIT UNIONS

■ 1. The authority citation for part 701 continues to read as follows:

Authority: 12 U.S.C. 1752(5), 1755, 1756, 1757, 1758, 1759, 1761a, 1761b, 1766, 1767, 1782, 1784, 1785, 1786, 1787, 1788, 1789. Section 701.6 is also authorized by 15 U.S.C. 3717. Section 701.31 is also authorized by 15 U.S.C. 1601 *et seq.;* 42 U.S.C. 1981 and 3601–3610. Section 701.35 is also authorized by 42 U.S.C. 4311–4312.

■ 2. Add § 701.25 to read as follows:

§ 701.25 Loans to credit unions.

(a) *Limits.* A federal credit union may make loans, including investments in Subordinated Debt, to other credit unions, including corporate credit unions and privately insured credit unions, subject to the following limits:

(1) *Aggregate limit.* The aggregate principal amount of loans to other credit unions may not exceed 25 percent of the federal credit union's paid-in and unimpaired capital and surplus.

(2) *Single borrower limit.* The aggregate principal amount of loans made to any one credit union may not exceed the greater of 15 percent of the federal credit union's Net Worth, as defined in part 702 of this chapter, at the time of the closing of the loan or $100,000, plus an additional 10 percent of the federal credit union's Net Worth if the amount that exceeds the federal credit union's 15 percent general limit is fully secured at all times with a perfected security interest by readily marketable collateral as defined in § 723.2 of this chapter.

(b) *Approval and policies.* A federal credit union's board of directors must approve all loans to other credit unions and establish written policies for making such loans. The written policies must, at a minimum, include the following:

(1) How the federal credit union will manage the credit risk of loans to other credit unions; and

(2) The limits on the aggregate principal amount of loans the federal credit union can make to other credit unions. The policies must specify the limits on the aggregate principal amount of loans the federal credit union can make to all other credit unions and the aggregate principal amount of loans the federal credit union can make to any single credit union; provided that any limits included in such policies do not exceed the limits in this section.

(c) *Investment in Subordinated Debt*—(1) *Eligibility.* A federal credit union may only invest, directly or indirectly, in the Subordinated Debt of federally

insured, natural person credit unions, or in loans or obligations issued by a privately insured credit union that are subordinate to the private insurer; provided that the investing federal credit union:

(i) Has at the time of the investment, a capital classification of ''Well Capitalized,'' as defined in part 702 of this chapter;

(ii) Does not have any outstanding Subordinated Debt or Grandfathered Secondary Capital, in each case with respect to which it was the Issuing Credit Union (as defined in part 702 of this chapter); and

(iii) Is not eligible to issue Subordinated Debt or Grandfathered Secondary Capital pursuant to an unexpired approval from the NCUA under subpart D of part 702 of this chapter.

(2) *Aggregate limit*—(i) *Aggregate limit.* A federal credit union's aggregate investment (direct or indirect) in the Subordinated Debt and Grandfathered Secondary Capital of any federally insured, natural person credit union, and in loans or obligations issued by a privately insured credit union that are subordinate to the private insurer, may not cause such aggregate investment to exceed, at the time of the investment, the lesser of:

(A) 25 percent of the investing federal credit union's Net Worth at the time of the investment; and

(B) Any amount of Net Worth in excess of seven percent (7%) of total assets.

(ii) *Calculation of aggregate limit.* The amount subject to the limit in subsection (A) of this section is calculated at the time of investment, and is based on a federal credit union's aggregate outstanding:

(A) Investment in Subordinated Debt;

(B) Investment in Grandfathered Secondary Capital;

(C) Investment in loans or obligations issued by a privately insured credit union that are subordinate to the private insurer; and

(D) Loans or portion of loans made by the credit union that is secured by any Subordinated Debt, Grandfathered Secondary Capital, or loans or obligations issued by a privately insured credit union that are subordinate to the private insurer.

(3) *Indirect investment.* A federal credit union must determine its indirect exposure by calculating its proportional ownership share of each exposure held in a fund, or similar indirect investment. The federal credit union's exposure to the fund is equal to the exposure held by the fund as if they were held directly by the federal credit union, multiplied by the federal credit union's proportional ownership share of the fund.

■ 3. In § 701.34,

■ a. Revise the section heading;

■ b. Remove and reserve paragraph (b); and

■ c. Remove paragraphs (c) and (d) and Appendix to § 701.34.

The revision reads as follows:

§ 701.34 Designation of low income status.

* * * * *

■ 4. Revise § 701.38 to read as follows:

§ 701.38 Borrowed funds.

(a) Federal credit unions may borrow funds from any source; provided that:

(1) The borrowing is evidenced by a written contract, such as a signed promissory note, that sets forth the terms and conditions including, at a minimum, maturity, prepayment, interest rate, method of computation of interest, and method of payment;

(2) The written contract and any solicitation with respect to such borrowing contain clear and conspicuous language indicating that:

(i) The funds represent money borrowed by the federal credit union; and

(ii) The funds do not represent shares and, therefore, are not insured by the National Credit Union Administration.

(b) A federal credit union is subject to the maximum borrowing authority of an aggregate amount not exceeding 50 percent of its paid-in and unimpaired capital and surplus. *Provided* that any federal credit union may discount with or sell to any federal intermediate credit bank any eligible obligations up to the amount of its paid-in and unimpaired capital (12 U.S.C. 1757(9)).

PART 702—CAPITAL ADEQUACY

■ 5. The authority citation for part 702 continues to read as follows:

Authority: 12 U.S.C. 1766(a), 1790d.

■ 6. In § 702.2:

■ a. Add a sentence after the first sentence of the introductory text;

■ b. Add a definition for ''Grandfathered Secondary Capital'' in alphabetical order;

■ c. Amend the definition of ''Net Worth'' by revising the introductory text and paragraphs (1) and (2); and

■ d. Add a definition for ''Subordinated Debt'' in alphabetical order.

The additions and revision read as follows:

§ 702.2 Definitions.

* * * All accounting terms not otherwise defined herein have the meanings assigned to them in accordance with United States generally accepted accounting principles (U.S. GAAP). * * *

* * * * *

Grandfathered Secondary Capital means any subordinated debt issued in accordance with § 701.34 of this chapter (recodified as § 702.414) or, in the case of a federally insured, state-chartered credit union, with § 741.204(c) of this chapter before [EFFECTIVE DATE OF THE FINAL RULE].

* * * * *

Net Worth means, with respect to any federally insured, natural person credit union, as of any date of determination:

(1) The retained earnings balance of the credit union at the most recent quarter end, as determined in accordance with U.S. GAAP, subject to paragraph (3) of this definition.

(2) With respect to a low-income designated credit union, the outstanding principal amount of Subordinated Debt treated as Regulatory Capital in accordance with § 702.407, and the outstanding principal amount of Grandfathered Secondary Capital treated as Regulatory Capital in accordance with § 702.414, in each case that is:

(i) Uninsured; and

(ii) Subordinate to all other claims against the credit union, including claims of creditors, shareholders, and the National Credit Union Share Insurance Fund.

* * * * *

Subordinated Debt has the meaning as provided in subpart D of this part.

* * * * *

■ 7. In § 702.104, revise paragraph (b)(1)(vii) and add paragraph (c)(2)(v)(B)(*9*) to read as follows:

§ 702.104 Risk-based capital ratio.

* * * * *

(b) * * *

(1) * * *

(vii) The outstanding principal amount of Subordinated Debt treated as Regulatory Capital in accordance with § 702.407 and the outstanding principal amount of Grandfathered Secondary Capital treated as Regulatory Capital in accordance with § 702.414; and

* * * * *

(c) * * *

(2) * * *

(v) * * *

(B) * * *

(*9*) Natural person credit union Subordinated Debt, Grandfathered Secondary Capital, and loans or obligations issued by a privately insured credit union that are subordinate to the private insurer.

* * * * *

■ 8. Amend § 702.109 by:
■ a. Redesignating paragraphs (a)(3) and (4) as paragraphs (a)(4) and (5), respectively;
■ b. Adding new paragraph (a)(3); and
■ c. Revising paragraph (b)(11).

The addition and revision read as follows:

§ 702.109 Prompt corrective action for critically undercapitalized credit unions.

(a) * * *

(3) *Restrictions on payments on Subordinated Debt.* Beginning 60 days after the effective date of a federally insured, natural person credit union being classified by the NCUA as ''Critically Undercapitalized'', that credit union shall not pay principal of or interest on its Subordinated Debt, except that unpaid interest shall continue to accrue under the terms of the related Subordinated Debt Note (as defined in subpart D of this part), to the extent permitted by law;

* * * * *

(b) * * *

(11) *Restrictions on payments on Grandfathered Secondary Capital.* Beginning 60 days after the effective date of classification of a credit union as ''Critically Undercapitalized'', prohibit payments of principal, dividends or interest on the credit union's Grandfathered Secondary Capital (as defined in subpart D of this part), except that unpaid dividends or interest shall continue to accrue under the terms of the account to the extent permitted by law;

* * * * *

■ 10. Revise § 702.205(d) to read as follows:

§ 702.205 Prompt corrective action for uncapitalized new credit unions.

* * * * *

(d) *Discretionary liquidation of an uncapitalized new credit union.* In lieu of paragraph (c) of this section, an uncapitalized new credit union may be placed into liquidation on grounds of insolvency pursuant to 12 U.S.C. 1787(a)(1)(A).

§ 702.206 [Amended]

■ 11. Amend § 702.206 by removing paragraph (d), and redesignating paragraphs (e) through (h) as (d) through (g), respectively.

■ 12. Redesignate §§ 702.207 through 702.210 as §§ 702.208 through 702.211, respectively, and add new § 702.207 to read as follows:

§ 702.207 Consideration of Subordinated Debt and Grandfathered Secondary Capital for new credit unions.

(a) *Exception from prompt corrective action for new credit unions.* The requirements of §§ 702.204 and 702.205 do not apply to a new credit union if, as of the applicable date of determination, each of the following conditions is satisfied:

(1) The new credit union has outstanding Subordinated Debt or Grandfathered Secondary Capital;

(2) The Subordinated Debt or Grandfathered Secondary Capital would be treated as Regulatory Capital under subpart D of this part if the new credit union were a Complex Credit Union or a low income-designated credit union;

(3) The ratio of the new credit union's Net Worth (including the amount of its Subordinated Debt and Grandfathered Secondary Capital treated as Regulatory Capital (as defined in subpart D of this part)) to its total assets is at least seven percent (7%); and

(4) The new credit union's Net Worth is increasing in a manner consistent with the new credit union's approved initial business plan or RBP.

(b) *Consideration of Subordinated Debt and Grandfathered Secondary Capital in evaluating an RBP.* The NCUA shall, in evaluating an RBP under this subpart B, consider a new credit union's aggregate outstanding principal amount of Subordinated Debt and Grandfathered Secondary Capital.

(c) *Prompt corrective action based on other supervisory criteria*—(1) *Application of prompt corrective action to an exempt new credit union.* The NCUA Board may apply prompt corrective action to a new credit union that is otherwise exempt under paragraph (a) of this section in the following circumstances:

(i) *Unsafe or unsound condition.* The NCUA Board has determined, after providing the new credit union with written notice and opportunity for hearing pursuant to § 747.2003 of this chapter, that the new credit union is in an unsafe or unsound condition; or

(ii) *Unsafe or unsound practice.* The NCUA Board has determined, after providing the new credit union with written notice and opportunity for hearing pursuant to § 747.2003 of this chapter, that the new credit union has not corrected a material unsafe or unsound practice of which it was, or should have been, aware.

(2) *Non-delegation.* The NCUA Board may not delegate its authority under paragraph (c) of this section.

(3) *Consultation with state officials.* The NCUA Board shall consult and seek to work cooperatively with the appropriate state official before taking action under paragraph (c) of this section and shall promptly notify the appropriate state official of its decision to take action under paragraph (c) of this section.

(d) *Discretionary liquidation.* Notwithstanding paragraph (a) of this section, the NCUA may place a new credit union into liquidation pursuant to 12 U.S.C. 1787(a)(3)(A), provided that the new credit union's ratio under paragraph (a)(3) of this section is, as of the applicable date of determination, below six percent (6%) and the new credit union has no reasonable prospect of becoming ''Adequately Capitalized'' under § 702.202.

(e) *Restrictions on payments on Subordinated Debt.* Beginning 60 days after the effective date of a new credit union being classified by the NCUA as ''Uncapitalized'', the new credit union shall not pay principal of or interest on its Subordinated Debt, except that unpaid interest shall continue to accrue under the terms of the related Subordinated Debt Note, to the extent permitted by law.

■ 13. Redesignate subparts D and E as subparts E and F, respectively, and add new subpart D to read as follows:

Subpart D—Subordinated Debt, Grandfathered Secondary Capital, and Regulatory Capital

Sec.
702.401 Purpose and scope.
702.402 Definitions.
702.403 Eligibility.
702.404 Requirements of the Subordinated Debt and Subordinated Debt Note.
702.405 Disclosures.
702.406 Requirements related to the offer, sale, and issuance of Subordinated Debt Notes.
702.407 Discounting of amount treated as Regulatory Capital.
702.408 Preapproval to issue Subordinated Debt.
702.409 Preapproval for federally insured, state-chartered credit unions to issue Subordinated Debt.
702.410 Interest payments on Subordinated Debt.
702.411 Prior written approval to prepay Subordinated Debt.
702.412 Effect of a merger or dissolution on the treatment of Subordinated Debt as Regulatory Capital.
702.413 Repudiation safe harbor.
702.414 Regulations governing Grandfathered Secondary Capital.
Appendix A to Subpart D of Part 702—Disclosure and Acknowledgement Form

Subpart D—Subordinated Debt, Grandfathered Secondary Capital, and Regulatory Capital

§ 702.401 Purpose and scope.

(a) *Subordinated Debt.* This subpart sets forth the requirements applicable to all Subordinated Debt issued by a federally insured, natural person credit union, including the NCUA's review

and approval of that credit union's application to issue or prepay Subordinated Debt. This subpart shall apply to a federally insured, state-chartered credit union only to the extent that such federally insured, state-chartered credit union is permitted by applicable state law to issue debt instruments of the type described in this subpart. To the extent that such state law is more restrictive than this subpart with respect to the issuance of such debt instruments, that state law shall apply. Any secondary capital, as that term is used in the Federal Credit Union Act, issued after [EFFECTIVE DATE OF THE FINAL RULE] is Subordinated Debt and subject to the requirements of this subpart.

(b) *Grandfathered Secondary Capital.* Any secondary capital issued under § 701.34 of this chapter before [EFFECTIVE DATE OF THE FINAL RULE] is governed by § 702.414. Grandfathered Secondary Capital will no longer be treated as Regulatory Capital as of [DATE 20 YEARS AFTER THE EFFECTIVE DATE OF THE FINAL RULE].

§ 702.402 Definitions.

To the extent they differ, the definitions in this section apply only to Subordinated Debt and not to Grandfathered Secondary Capital. (Definitions applicable to Grandfathered Secondary Capital are in § 702.414.) All other terms in this subpart and not expressly defined herein have the meanings assigned to them elsewhere in this part. For ease of use, certain key terms are included below using cross citations to other sections of this part where those terms are defined.

Accredited Investor means a Natural Person Accredited Investor or an Entity Accredited Investor, as applicable.

Appropriate Supervision Office means, with respect to any credit union, the Regional Office or Office of National Examinations and Supervision that is responsible for supervision of that credit union.

Complex Credit Union has the same meaning as in subpart A of this part.

Entity Accredited Investor means an entity that, at the time of offering and closing of the issuance and sale of Subordinated Debt to that entity, meets the requirements of 17 CFR 230.501(a)(1), (2), (3), (7), or (8).

Grandfathered Secondary Capital means any subordinated debt issued in accordance with § 701.34 of this chapter (recodified as § 702.414 of subpart D of this part) or, in the case of a federally insured, state-chartered credit union, with § 741.204(c) of this chapter, before [EFFECTIVE DATE OF THE FINAL RULE].

Immediate Family Member means spouse, child, sibling, parent, grandparent, or grandchild (including stepparents, stepchildren, stepsiblings, and adoptive relationships).

Issuing Credit Union means, for purposes of this subpart, a credit union that has issued, or is in the process of issuing, Subordinated Debt or Grandfathered Secondary Capital in accordance with the requirements of this subpart.

Low-Income designated Credit Union (LICU) is a credit union designated as having low-income status in accordance with § 701.34 of this chapter.

Natural Person Accredited Investor means a natural person who, at the time of offering and closing of the issuance and sale of Subordinated Debt to that person, meets the requirements of 17 CFR 230.501(a)(5) or (6); *provided* that, for purposes of purchasing or holding any Subordinated Debt Note, this term shall not include any board member or Senior Executive Officer of the Issuing Credit Union or any Immediate Family Member of any board member or Senior Executive Officer of the Issuing Credit Union.

Net Worth has the same meaning as in § 702.2.

Net Worth Ratio has the same meaning as in § 702.2.

New Credit Union has the same meaning as in § 702.201.

Offering Document means the document(s) required by § 702.408, including any term sheet, offering memorandum, private placement memorandum, offering circular, or other similar document used to offer and sell Subordinated Debt Notes.

Pro Forma Financial Statements means projected financial statements that show the effects of proposed transactions as if they actually occurred in a variety of plausible scenarios, including both optimistic and pessimistic assumptions, over measurement horizons that align with the credit union's expected activities.

Qualified Counsel means an attorney licensed to practice law in the relevant jurisdiction(s) who has expertise in the areas of federal and state securities laws and debt transactions similar to those described in this subpart.

Regulatory Capital means:

(1) With respect to an Issuing Credit Union that is a LICU and not a Complex Credit Union, the aggregate outstanding principal amount of Subordinated Debt and, until [DATE 20 YEARS AFTER THE EFFECTIVE DATE OF THE FINAL RULE], Grandfathered Secondary Capital that is included in the credit union's Net Worth Ratio;

(2) With respect to an Issuing Credit Union that is a Complex Credit Union and not a LICU, the aggregate outstanding principal amount of Subordinated Debt that is included in the credit union's RBC Ratio;

(3) With respect to an Issuing Credit Union that is both a LICU and a Complex Credit Union, the aggregate outstanding principal amount of Subordinated Debt and, until [DATE 20 YEARS AFTER THE EFFECTIVE DATE OF THE FINAL RULE], Grandfathered Secondary Capital that is included in its Net Worth Ratio and in its RBC Ratio; and

(4) With respect to a New Credit Union, the aggregate outstanding principal amount of Subordinated Debt and, until [DATE 20 YEARS AFTER THE EFFECTIVE DATE OF THE FINAL RULE], Grandfathered Secondary Capital that is considered pursuant to § 702.207.

Retained Earnings has the same meaning as in United States GAAP.

RBC Ratio has the same meaning as in § 702.2.

Senior Executive Officer means a credit union's chief executive officer (for example, president or treasurer/manager), any assistant chief executive officer (*e.g.,* any assistant president, any vice president or any assistant treasurer/manager) and the chief financial officer (controller). The term ''Senior Executive Officer'' also includes employees and contractors of an entity, such as a consulting firm, hired to perform the functions of positions covered by the term Senior Executive Officer.

Subordinated Debt means an Issuing Credit Union's borrowing that meets the requirements of this subpart, including all obligations and contracts related to such borrowing.

Subordinated Debt Note means the written contract(s) evidencing the Subordinated Debt.

§ 702.403 Eligibility.

(a) Subject to receiving approval under § 702.408 or 702.409, a credit union may issue Subordinated Debt only if, at the time of such issuance, the credit union is:

(1) A Complex Credit Union with a capital classification of at least ''Undercapitalized,'' as defined in § 702.102;

(2) A LICU;

(3) Able to demonstrate to the satisfaction of the NCUA that it reasonably anticipates becoming either a Complex Credit Union meeting the requirements of paragraph (a)(1) of this section or a LICU within 24 months

after issuance of the Subordinated Debt Notes; or

(4) A new credit union with Retained Earnings equal to or greater than one percent (1%) of assets.

(b) At the time of issuance of any Subordinated Debt, an Issuing Credit Union may not have any investments, direct or indirect, in Subordinated Debt or Grandfathered Secondary Capital (or any interest therein) of another credit union. If a credit union acquires Subordinated Debt or Grandfathered Secondary Capital in a merger or other consolidation, the Issuing Credit Union may still issue Subordinated Debt, but it may not invest (directly or indirectly) in the Subordinated Debt or Grandfathered Secondary Capital of any other credit union while any Subordinated Debt Notes issued by the Issuing Credit Union remain outstanding.

(c) If the Issuing Credit Union is a Complex Credit Union that is not also a LICU, the aggregate outstanding principal amount of all Subordinated Debt issued by that Issuing Credit Union may not exceed 100 percent of its Net Worth, as determined at the time of each issuance of Subordinated Debt.

§ 702.404 Requirements of the Subordinated Debt and Subordinated Debt Note.

(a) *Requirements.* At a minimum, the Subordinated Debt or the Subordinated Debt Note, as applicable, must:

(1) Be in the form of a written, unconditional promise to pay on a specified date a sum certain in money in return for adequate consideration in money;

(2) Have, at the time of issuance, a fixed stated maturity of at least five years and not more than 20 years from issuance. The stated maturity of the Subordinated Debt Note may not reset and may not contain an option to extend the maturity;

(3) Be subordinate to all other claims in liquidation under § 709.5(b) of this chapter, and have the same payout priority as all other outstanding Subordinated Debt and Grandfathered Secondary Capital;

(4) Be properly characterized as debt in accordance with U.S. GAAP;

(5) Be unsecured, including, without limitation, prohibiting the establishment of any legally enforceable claim against funds earmarked for payment of the Subordinated Debt through:

(i) A compensating balance or any other funds or assets subject to a legal right of offset, as defined by applicable state law; or

(ii) A sinking fund, such as a fund formed by periodically setting aside money for the gradual repayment of the Subordinated Debt.

(6) Be applied by the Issuing Credit Union at the end of each of its fiscal years (or more frequently as determined by the Issuing Credit Union) in which the Subordinated Debt remains outstanding to cover any deficit in Retained Earnings on a pro rata basis among all holders of the Subordinated Debt and Grandfathered Secondary Capital of the Issuing Credit Union; it being understood that any amounts applied to cover a deficit in Retained Earnings shall no longer be considered due and payable to the holder(s) of the Subordinated Debt or Grandfathered Secondary Capital;

(7) Except as provided in §§ 702.411 and 702.412(c), be payable in full by the Issuing Credit Union or its successor or assignee only at maturity;

(8) Disclose any prepayment penalties or restrictions on prepayment;

(9) Be offered, issued, and sold only to Entity Accredited Investors or Natural Person Accredited Investors, in accordance § 702.406; and

(10) Be re-offered, reissued, and resold only to an Entity Accredited Investor (if the initial offering, issuance, and sale was solely made to Entity Accredited Investors) or any Accredited Investor (if the initial offering, issuance, and sale involved one or more Natural Person Accredited Investors).

(b) *Restrictions.* The Subordinated Debt or the Subordinated Debt Note, as applicable, must not:

(1) Be structured or identified as a share, share account, or any other instrument in the Issuing Credit Union that is insured by the National Credit Union Administration;

(2) Include any express or implied terms that make it senior to any other Subordinated Debt issued under this subpart or Grandfathered Secondary Capital;

(3) Cause the Issuing Credit Union to exceed the borrowing limit in § 741.2 of this chapter or, for federally insured, state-chartered credit unions, any more restrictive state borrowing limit;

(4) Provide the holder thereof with any management or voting rights in the Issuing Credit Union;

(5) Be eligible to be pledged or provided by the investor as security for a loan from, or other obligation owing to, the Issuing Credit Union;

(6) Include any express or implied term, condition, or agreement that would require the Issuing Credit Union to prepay or accelerate payment of principal of or interest on the Subordinated Debt prior to maturity, including investor put options;

(7) Include an express or implied term, condition, or agreement that would trigger an event of default based on the Issuing Credit Union's default on other debts;

(8) Include any condition, restriction, or requirement based on the Issuing Credit Union's credit quality or other credit-sensitive feature; or

(9) Require the Issuing Credit Union to make any form of payment other than in cash.

(c) *Negative covenants.* A Subordinated Debt Note must not include any provision or covenant that unduly restricts or otherwise acts to unduly limit the authority of the Issuing Credit Union or interferes with the NCUA's supervision of the Issuing Credit Union. This includes, but is not limited to, a provision or covenant that:

(1) Requires the Issuing Credit Union to maintain a minimum amount of Retained Earnings or other metric, such as a minimum Net Worth Ratio or minimum asset, liquidity, or loan ratios;

(2) Unreasonably restricts the Issuing Credit Union's ability to raise capital through the issuance of additional Subordinated Debt;

(3) Provides for default of the Subordinated Debt as a result of the Issuing Credit Union's compliance with any law, regulation, or supervisory directive from the NCUA or, if applicable, the state supervisory authority;

(4) Provides for default of the Subordinated Debt as the result of a change in the ownership, management, or organizational structure or charter of the Issuing Credit Union; provided that, following such change, the Issuing Credit Union or the resulting institution, as applicable:

(i) Agrees to perform all of the obligations, terms, and conditions of the Subordinated Debt; and

(ii) At the time of such change, is not in material default of any provision of the Subordinated Debt Note, after giving effect to the applicable cure period described in paragraph (d) of this section.

(5) Provides for default of the Subordinated Debt as the result of an act or omission of any third party, including but not limited to a credit union service organization, as defined in § 712.1(d) of this chapter.

(d) *Default covenants.* A Subordinated Debt Note that includes default covenants must provide the Issuing Credit Union with a reasonable cure period of not less than 30 calendar days.

(e) *Minimum denominations of issuances to Natural Person Accredited Investors.* An Issuing Credit Union may only issue Subordinated Debt Notes to Natural Person Accredited Investors in minimum denominations of $100,000, and cannot exchange any such

Subordinated Debt Notes after the initial issuance or any subsequent resale for Subordinated Debt Notes of the Issuing Credit Union in denominations less than $10,000. Each such Subordinated Debt Note, if issued in certificate form, must include a legend disclosing that it cannot be exchanged for Subordinated Debt Notes of the Issuing Credit Union in denominations less than $100,000, and Subordinated Debt Notes issued in book-entry or other uncertificated form shall include appropriate instructions prohibiting the exchange of such Subordinated Debt Notes for Subordinated Debt Notes of the Issuing Credit Union in denominations that would violate the foregoing restrictions.

§ 702.405 Disclosures.

(a) An Issuing Credit Union must disclose the following language clearly, in all capital letters, on the face of a Subordinated Debt Note:

• THIS OBLIGATION IS NOT A SHARE IN THE ISSUING CREDIT UNION AND IS NOT INSURED BY THE NATIONAL CREDIT UNION ADMINISTRATION.

• THIS OBLIGATION IS UNSECURED AND SUBORDINATE TO ALL CLAIMS AGAINST THE ISSUING CREDIT UNION AND IS INELIGIBLE AS COLLATERAL FOR A LOAN BY THE ISSUING CREDIT UNION.

• AMOUNTS OTHERWISE PAYABLE HEREUNDER MAY BE REDUCED IN ORDER TO COVER ANY DEFICIT IN RETAINED EARNINGS OF THE ISSUING CREDIT UNION. AMOUNTS APPLIED TO COVER ANY SUCH DEFICIT WILL RESULT IN A CORRESPONDING REDUCTION OF THE PRINCIPAL AMOUNT OF ALL OUTSTANDING SUBORDINATED DEBT ISSUED BY THE ISSUING CREDIT UNION, AND WILL NO LONGER BE DUE AND PAYABLE TO THE HOLDERS OF SUCH SUBORDINATED DEBT. AMOUNTS APPLIED TO COVER ANY SUCH DEFICIT MUST BE APPLIED AMONG ALL HOLDERS OF SUCH SUBORDINATED DEBT PRO RATA BASED ON THE AGGREGATE AMOUNT OF SUBORDINATED DEBT OWED BY THE ISSUING CREDIT UNION TO EACH SUCH HOLDER AT THE TIME OF APPLICATION.

• THIS OBLIGATION CAN ONLY BE REPAID AT MATURITY OR IN ACCORDANCE WITH 12 CFR 702.411. THIS OBLIGATION MAY ALSO BE REPAID IN ACCORDANCE WTH 12 CFR PART 710 IF THE ISSUING CREDIT UNION VOLUNTARILY LIQUIDATES.

• THE NOTE EVIDENCING THIS OBLIGATION HAS NOT BEEN AND WILL NOT BE REGISTERED UNDER THE SECURITIES ACT OF 1933, AS AMENDED (THE ''SECURITIES ACT''), OR THE SECURITIES LAWS OF ANY STATE OF THE UNITED STATES OR ANY OTHER JURISDICTION, AND MAY BE ISSUED, SOLD, PLEDGED, OR OTHERWISE TRANSFERRED ONLY (A) AS PERMITTED IN THE NOTE AND TO A PERSON WHOM THE ISSUER OR SELLER REASONABLY BELIEVES IS [AN ''ACCREDITED INVESTOR'' (AS DEFINED IN 12 CFR 702.402)] [AN ''ENTITY ACCREDITED INVESTOR'' (AS DEFINED IN 12 CFR 702.402)] (THAT IS NOT A MEMBER OF THE ISSUING CREDIT UNION'S BOARD, A SENIOR EXECUTIVE OFFICER OF THE ISSUING CREDIT UNION (AS THAT TERM IS DEFINED IN 12 CFR 702.402), OR ANY IMMEDIATE FAMILY MEMBER OF ANY SUCH BOARD MEMBER OR SENIOR EXECUTIVE OFFICER), PURCHASING FOR ITS OWN ACCOUNT, (1) TO WHOM NOTICE IS GIVEN THAT THE SALE, PLEDGE, OR OTHER TRANSFER IS BEING MADE IN RELIANCE ON THE EXEMPTION FROM SECURITIES ACT REGISTRATION PROVIDED BY SECTION 3(a)(5) OF THE SECURITIES ACT, OR (2) IN ACCORDANCE WITH ANOTHER EXEMPTION FROM THE REGISTRATION REQUIREMENTS OF THE SECURITIES ACT (SUBJECT TO THE DELIVERY OF SUCH CERTIFICATIONS, LEGAL OPINIONS, OR OTHER INFORMATION AS THE ISSUING CREDIT UNION MAY REASONABLY REQUIRE TO CONFIRM THAT SUCH SALE, PLEDGE, OR TRANSFER IS BEING MADE PURSUANT TO AN EXEMPTION FROM, OR IN A TRANSACTION NOT SUBJECT TO, THE REGISTRATION REQUIREMENTS OF THE SECURITIES ACT), (B) IN COMPLIANCE WITH THE CERTIFICATION AND OTHER REQUIREMENTS SPECIFIED IN THE [INDENTURE OR OTHER DOCUMENT PURSUANT TO WHICH THE SUBORDINATED DEBT NOTE IS ISSUED] REFERRED TO HEREIN, AND (C) IN ACCORDANCE WITH ANY APPLICABLE SECURITIES LAWS OF ANY STATE OF THE UNITED STATES AND ANY OTHER APPLICATION JURISDICTION.

(b) An Issuing Credit Union must also clearly and accurately disclose in the Subordinated Debt Note:

(1) The payout priority and level of subordination, as described in § 709.5(b) of this chapter, that would apply in the event of the involuntary liquidation of the Issuing Credit Union;

(2) A general description of the NCUA's regulatory authority that includes, at a minimum:

(i) If the Issuing Credit Union is ''Undercapitalized'' or, if the Issuing Credit Union is a New Credit Union, ''Moderately Capitalized'' (each as defined in this part), and fails to submit an acceptable Net Worth restoration plan, capital restoration plan, or revised business plan, as applicable, or materially fails to implement such a plan that was approved by the NCUA, the Issuing Credit Union may be subject to all of the additional restrictions and requirements applicable to a ''Significantly Undercapitalized'' credit union or, if the Issuing Credit Union is a New Credit Union, a ''Marginally Capitalized'' New Credit Union;

(ii) Beginning 60 days after the effective date of an Issuing Credit Union being classified as ''Critically Undercapitalized'' or, in the case of a New Credit Union, ''Uncapitalized,'' the Issuing Credit Union shall not pay principal of or interest on its Subordinated Debt, until reauthorized to do so by the NCUA; provided, however, that unpaid interest shall continue to accrue under the terms of the Subordinated Debt Note, to the extent permitted by law.

(3) The risk factors associated with the NCUA's or, if applicable, the state supervisory authority's, authority to conserve or liquidate a credit union under the Federal Credit Union Act (FCU Act) or applicable state law.

§ 702.406 Requirements related to the offer, sale, and issuance of Subordinated Debt Notes.

(a) *Offering Document.* An Issuing Credit Union or person acting on behalf of or at the direction of any Issuing Credit Union may only issue and sell Subordinated Debt Notes if, a reasonable time prior to the issuance and sale of any Subordinated Debt Notes, each purchaser of a Subordinated Debt Note receives an Offering Document that meets the requirements of § 702.408(e) and such further material information, if any, as may be necessary to make the required disclosures in that Offering Document, in the light of the circumstances under which they are made, not misleading.

(b) *Territorial limitations.* An Issuing Credit Union may only offer, issue, and sell Subordinated Debt Notes in the United States of America (including any one of the states thereof and the District of Columbia), its territories, and its possessions.

(c) *Accredited Investors.* An Issuing Credit Union may only offer, issue, and sell Subordinated Debt to Accredited Investors, and the terms of any Subordinated Debt Note must include the restrictions in § 702.404(a)(10); provided that no Subordinated Debt Note may be issued, sold, resold, pledged, or otherwise transferred to a member of the board of the Issuing Credit Union, any Senior Executive Officer of the Issuing Credit Union, or any Immediate Family Member of any such board member or Senior Executive Officer. Prior to the offer of any Subordinated Debt Note, the Issuing Credit Union must receive a signed, one-page, unambiguous certification from any potential investor of a Subordinated Debt Note. The certification must be in substantially the following form:

CERTIFICATE OF ACCREDITED INVESTOR STATUS

Except as may be indicated by the undersigned below, the undersigned is an accredited investor, as that term is defined in Regulation D under the Securities Act of 1933, as amended (the ''*Act*''). In order to demonstrate the basis on which it is representing its status as an accredited investor, the undersigned has checked one of the boxes below indicating that the undersigned is:

[ ] A bank as defined in Section 3(a)(2) of the Act, or any savings and loan association or other institution as defined in Section 3(a)(5)(A) of the Act whether acting in its individual or fiduciary capacity; a broker or dealer registered pursuant to Section 15 of the Securities Exchange Act of 1934; an insurance company as defined in Section 2(a)(13) of the Act; an investment company registered under the Investment Company Act of 1940 or a business development company as defined in Section 2(a)(48) of that act; a small business investment company licensed by the U.S. Small Business Administration under Section 301(c) or (d) of the Small Business Investment Act of 1958; a plan established and maintained by a state, its political subdivisions, or any agency or instrumentality of a state or its political subdivisions, for the benefit of its employees, if such plan has total assets in excess of $5,000,000; an employee benefit plan within the meaning of the Employee Retirement Income Security Act of 1974, if the investment decision is made by a plan fiduciary, as defined in Section 3(21) of such act, which is either a bank, savings and loan association, insurance company, or registered investment adviser, or if the employee benefit plan has total assets in excess of $5,000,000 or, if a self-directed plan, with investment decisions made solely by persons that are accredited investors;

[ ] A private business development company as defined in Section 202(a)(22) of the Investment Advisers Act of 1940;

[ ] An organization described in Section 501(c)(3) of the Internal Revenue Code; a corporation; a Massachusetts or similar business trust; or a partnership, not formed for the specific purpose of acquiring the securities offered, with total assets in excess of $5,000,000;

[ ] A natural person whose individual net worth, or joint net worth with the undersigned's spouse, at the time of this purchase exceeds $1,000,000 (excluding the value of the person's primary residence);

[ ] A natural person who had individual income in excess of $200,000 in each of the two most recent years or joint income with the undersigned's spouse in excess of $300,000 in each of those years and has a reasonable expectation of reaching the same income level in the current year;

[ ] A trust with total assets in excess of $5,000,000, not formed for the specific purpose of acquiring the securities offered, whose purchase is directed by a person who has such knowledge and experience in financial and business matters that he or she is capable of evaluating the merits and risks of the prospective investment; or

[ ] An entity in which all of the equity holders are accredited investors by virtue of their meeting one or more of the above standards.

The undersigned understands that [NAME OF ISSUING CREDIT UNION] (the ''Credit Union'') is required to verify the undersigned's accredited investor status AND ELECTS TO DO ONE OF THE FOLLOWING:

[ ] Allow the Credit Union's representative to review the undersigned's tax returns for the two most recently completed years and provide a written representation of the undersigned's reasonable expectation of reaching the income level necessary to qualify as an accredited investor during the current year;

[ ] Allow the Credit Union's representative to: (1) Obtain a written representation from the undersigned that states that all liabilities necessary to make a determination of net worth have been disclosed; and (2) review one or more of the following types of documentation dated within the past three months: bank statements, brokerage statements, tax assessments, appraisal reports as to assets, or a consumer report from a nationwide consumer reporting agency;

[ ] Provide the Credit Union with a written confirmation from one of the following persons or entities that such person or entity has taken reasonable steps to verify that the undersigned is an accredited investor within the prior three months and has determined that the undersigned is an accredited investor:

- A registered broker-dealer;
- An investment adviser registered with the Securities Exchange Commission;
- A licensed attorney who is in good standing under the laws of the jurisdictions in which such attorney is admitted to practice law; or
- A certified public accountant who is duly registered and in good standing under the laws of the place of such accountant's residence or principal office.

In Witness Whereof, the undersigned has executed this Certificate of Accredited Investor Status effective as of _____, 20__.

Name of Investor

[Name of Authorized Representative

Title of Authorized Representative]

Signature

Address

Address

Phone Number

Email Address

(d) *Use of trustees.* If using a trustee in connection with the offer, issuance, and sale of Subordinated Debt Notes, the trustee must meet the requirements set forth in the Trust Indenture Act of 1939, as amended, and any rules promulgated thereunder, including requirements for qualification set forth in section 310 thereof, and any applicable state law.

(e) *Offers, issuances, and sales of Subordinated Debt Notes.* Offers issuances, and sales of Subordinated Debt Notes are required to be made in accordance with the following requirements:

(1) *Application to offer, issue, and sell at offices of Issuing Credit Union.* If the Issuing Credit Union intends to offer and sell Subordinated Debt Notes at one or more of its offices, the Issuing Credit Union must first apply in writing to the Appropriate Supervision Office indicating that it intends to offer, issue, and sell Subordinated Debt Notes at one or more of its offices. The application must include, at a minimum, the physical locations of such offices and a description of how the Issuing Credit Union will comply with the requirements of this subsection;

(2) *Decision on application.* Within 60 calendar days (which may be extended by the Appropriate Supervision Office) after the date of receipt of a complete application described in paragraph (e)(1) of this section, the Appropriate Supervision Office will provide the Issuing Credit Union with a written determination on its application to conduct offering and sales activity from its office(s). Any denial of an Issuing Credit Union's application under this section will include the reasons for such denial;

(3) *Commissions, bonuses, or comparable payments.* In connection with any offering and sale of Subordinated Debt Notes (whether or not conducted at offices of the Issuing Credit Union), an Issuing Credit Union shall not pay, directly or indirectly, any commissions, bonuses, or comparable payments to any employee of the Issuing Credit Union or any affiliated Credit Union Service Organizations (CUSOs) assisting with the offer, issuance, and sale of such Subordinated Debt Notes, or to any other person in connection with the offer, issuance, and sale of Subordinated Debt Notes; except that compensation and commissions consistent with industry norms may be paid to securities personnel of registered broker-dealers as otherwise permitted by applicable law;

(4) *Issuances by tellers.* No offers or sales may be made by tellers at the teller counter of any Issuing Credit Union, or by comparable persons at comparable locations;

(5) *Permissible issuing personnel.* In connection with an offering or sale of Subordinated Debt Notes (whether or not conducted at offices of the Issuing Credit Union), such activity may be conducted only by regular, full-time employees of the Issuing Credit Union or by securities personnel who are subject to supervision by a registered broker-dealer, which securities personnel may be employees of the Issuing Credit Union's affiliated CUSO that is assisting the Issuing Credit Union

with the offer, issuance, and sale of the Subordinated Debt Notes;

(6) *Issuance practices, advertisements, and other literature used in connection with the offer and sale of Subordinated Debt Notes.* In connection with an offering or sale of Subordinated Debt Notes (whether or not conducted at offices of the Issuing Credit Union), issuance practices, advertisements, and other issuance literature used in connection with offers and issuances of Subordinated Debt Notes by Issuing Credit Unions or any affiliated CUSOs assisting with the offer and issuance of such Subordinated Debt Notes shall be subject to the requirements of this subpart; and

(7) *Office of an Issuing Credit Union.* For purposes of this subsection, an ''office'' of an Issuing Credit Union means any premises used by the Issuing Credit Union that is identified to the public through advertising or signage using the Issuing Credit Union's name, trade name, or logo.

(f) *Securities laws.* An Issuing Credit Union must comply with all applicable federal and state securities laws.

(g) *Resales.* All resales of Subordinated Debt Notes issued by an Issuing Credit Union by holders of such Subordinated Debt Notes must be made pursuant to Rule 144 under the Securities Act of 1933, as amended (17 CFR 230.144) (other than paragraphs (c), (e), (f), (g) and (h) of such Rule), Rule 144A under the Securities Act of 1933, as amended (17 CFR 230.144A), or another exemption from registration under the Securities Act of 1933, as amended. Subordinated Debt Notes must include the restrictions on resales in § 702.404(a)(10).

§ 702.407 Discounting of amount treated as Regulatory Capital.

The amount of outstanding Subordinated Debt that may be treated as Regulatory Capital shall reduce by 20 percent per annum of the initial aggregate principal amount of the applicable Subordinated Debt (as reduced by prepayments or amounts extinguished to cover a deficit under § 702.404(a)(6)), as required by the following schedule:

Remaining maturity	Balance treated as Regulatory Capital (percent)
Four to less than five years	80
Three to less than four years ...	60
Two to less than three years	40
One to less than two years	20
Less than one year	0

§ 702.408 Preapproval to issue Subordinated Debt.

(a) *Scope.* This section requires all credit unions to receive written preapproval from the NCUA before issuing Subordinated Debt. Procedures related specifically to applications from federally insured, state-chartered credit unions are contained in § 702.409. A credit union seeking approval to offer and sell Subordinated Debt at one or more of its offices must also follow the application procedures in § 702.406(e). All approvals under this section are subject to the expiration limits specified in paragraph (k) of this section.

(b) *Initial application to issue Subordinated Debt.* A credit union requesting approval to issue Subordinated Debt must first submit an application to the Appropriate Supervision Office that, at a minimum, includes:

(1) A statement indicating how the credit union qualifies to issue Subordinated Debt given the eligibility requirements of § 702.403 with additional supporting analysis if anticipating to meet the requirements of a LICU or Complex Credit Union within 24 months after issuance of the Subordinated Debt;

(2) The maximum aggregate principal amount of Subordinated Debt Notes and the maximum number of discrete issuances of Subordinated Debt Notes that the credit union is proposing to issue within the period allowed under paragraph (k) of this section;

(3) The estimated number of investors and the status of such investors (Natural Person Accredited Investors and/or Entity Accredited Investors) to whom the credit union intends to offer and sell the Subordinated Debt Notes;

(4) A statement identifying any outstanding Subordinated Debt or Grandfathered Secondary Capital previously issued by the credit union;

(5) A copy of the credit union's strategic plan, business plan, and budget, and an explanation of how the credit union intends to use the Subordinated Debt in conformity with those plans;

(6) An analysis of how the credit union will provide for liquidity to repay the Subordinated Debt upon maturity of the Subordinated Debt;

(7) Pro Forma Financial Statements (balance sheet, income statement, and statement of cash flows), including any off-balance sheet items, covering at least five years. Analytical support for key assumptions and key assumption changes must be included in the application. Key assumptions include, but are not limited to, interest rate, liquidity, and credit loss scenarios;

(8) A statement indicating how the credit union will use the proceeds from the issuance and sale of the Subordinated Debt;

(9) A statement identifying the governing law specified in the Subordinated Debt Notes and the documents pursuant to which the Subordinated Debt Notes will be issued;

(10) A draft written policy governing the offer, and issuance, and sale of the Subordinated Debt, developed in consultation with Qualified Counsel, which, at a minimum, addresses:

(i) Compliance with all applicable federal and state securities laws and regulations;

(ii) Compliance with applicable securities laws related to communications with investors and potential investors, including, but not limited to: Who may communicate with investors and potential investors; what information may be provided to investors and potential investors; ongoing disclosures to investors; who will review and ensure the accuracy of the information provided to investors and potential investors; and to whom information will be provided;

(iii) Compliance with any laws that may require registration of credit union employees as broker-dealers; and

(iv) Any use of outside agents, including broker-dealers, to assist in the marketing and issuance of Subordinated Debt, and any limitations on such use.

(11) A schedule that provides an itemized statement of all expenses incurred or expected to be incurred by the credit union in connection with the offer, issuance, and sale of the Subordinated Debt Notes to which the initial application relates, other than underwriting discounts and commissions or similar compensation payable to broker-dealers acting as placement agents. The schedule must include, as applicable, fees and expenses of counsel, auditors, any trustee or issuing and paying agent or any transfer agent, and printing and engraving expenses. If the amounts of any items are not known at the time of filing of the initial application, the credit union must provide estimates, clearly identified as such;

(12) In the case of a New Credit Union, a statement that it is subject to either an approved initial business plan or revised business plan, as required by this part, and how the proposed Subordinated Debt would conform with the approved plan. Unless the New Credit Union has a LICU designation pursuant to § 701.34 of this chapter, it must also include a plan for replacing the Subordinated Debt with Retained Earnings before the credit union ceases

to meet the definition of New Credit Union in § 702.2;

(13) A statement describing any investments the credit union has in the Subordinated Debt of any other credit union, and the manner in which the credit union acquired such Subordinated Debt, including through a merger or other consolidation;

(14) A signature page signed by the credit union's principal executive officer, principal financial officer or principal accounting officer, and a majority 'of the members of its board of directors. Amendments to an initial application must be signed and filed with the NCUA in the same manner as the initial application; and

(15) Any additional information requested in writing by the Appropriate Supervision Office.

(c) *Decision on initial application.* Upon receiving an initial application submitted under this subsection and any additional information requested in writing by the Appropriate Supervision Office, the Appropriate Supervision Office will evaluate, at a minimum, the credit union's compliance with this subpart and all other NCUA regulations, the credit union's ability to manage and safely offer, issue, and sell the proposed Subordinated Debt, the safety and soundness of the proposed use of the Subordinated Debt, the overall condition of the credit union, and any other factors the Appropriate Supervision Office determines are relevant.

(1) *Written determination.* Within 60 calendar days (which may be extended by the Appropriate Supervision Office) after the date of receipt of a complete application, the Appropriate Supervision Office will provide the credit union with a written determination on its application. In the case of a full or partial denial, or conditional approval under paragraph (c)(2) of this section, the written decision will state the reasons for the denial or conditional approval.

(2) *Conditions of approval.* Any approval granted by an Appropriate Supervision Office under this section may include one or more of the following conditions:

(i) Approval of an aggregate principal amount of Subordinated Debt that is lower than what the credit union requested;

(ii) Any applicable minimum level of Net Worth that the credit union must maintain while the Subordinated Debt Notes are outstanding;

(iii) Approved uses of the Subordinated Debt; and

(iv) Any other limitations or conditions the Appropriate Supervision Office deems necessary to protect the NCUSIF.

(d) *Offering Document.* Following receipt of written approval of its initial application, an Issuing Credit Union must prepare an Offering Document for each issuance of Subordinated Debt Notes. In addition, as required in paragraph (f) of this section, an Issuing Credit Union that intends to offer Subordinated Debt Notes to any Natural Person Accredited Investors must have the related Offering Document declared ''approved for use'' by the NCUA before its first use. At a reasonable time prior to any issuance and sale of Subordinated Debt Notes, the Issuing Credit Union must provide each investor with an Offering Document as described in this section. All Offering Documents must be filed with the NCUA within two business days after their respective first use.

(e) *Requirements for all Offering Documents.* (1) *Minimum information required in an Offering Document.* An Offering Document must, at a minimum, include the following information:

(i) The name of the Issuing Credit Union and the address of its principal executive office;

(ii) The initial principal amount of the Subordinated Debt being issued;

(iii) The name(s) of any underwriter(s) or placement agents being used for the issuance;

(iv) A description of the material risk factors associated with the purchase of the Subordinated Debt Notes, including any special or distinctive characteristics of the Issuing Credit Union's business, field of membership, or geographic location that are reasonably likely to have a material impact on the Issuing Credit Union's future financial performance;

(v) The disclosures described in § 702.405 and such additional material information, if any, as may be necessary to make the required disclosures, in the light of the circumstances under which they are made, not misleading;

(vi) Provisions related to the interest, principal, payment, maturity, and prepayment of the Subordinated Debt Notes;

(vii) All material affirmative and negative covenants that may or will be included in the Subordinated Debt Note, including, but not limited to, the covenants discussed in this subpart;

(viii) Any legends required by applicable state law; and

(ix) The following legend, displayed on the cover page in prominent type or in another manner:

None of the Securities and Exchange Commission (the ''SEC''), any state securities commission or the National Credit Union Administration has passed upon the merits of, or given its approval of, the purchase of any Subordinated Debt Notes offered or the terms of the offering, or passed on the accuracy or completeness of any Offering Document or other materials used in connection with the offer, issuance, and sale of the Subordinated Debt Notes. Any representation to the contrary is unlawful. These Subordinated Debt Notes have not been registered under the Securities Act of 1933, as amended (the ''Act'') and are being offered and sold to [an Entity Accredited Investor][an Accredited Investor] (as defined in 12 CFR 702.402) pursuant to an exemption from registration under the Act; however, neither the SEC nor the NCUA has made an independent determination that the offer and issuance of the Subordinated Debt Notes are exempt from registration.

(2) *Legibility requirements.* An Issuing Credit Union's Offering Document must comply with the following legibility requirements:

(i) Information in the Offering Document must be presented in a clear, concise, and understandable manner, incorporating plain English principles. The body of all printed Offering Documents shall be in type at least as large and as legible as 10-point type. To the extent necessary for convenient presentation, however, financial statements and other tabular data, including tabular data in notes, may be in type at least as large and as legible as 8-point type. Repetition of information should be avoided. Cross-referencing of information within the document is permitted; and

(ii) Where an Offering Document is distributed through an electronic medium, the Issuing Credit Union may satisfy legibility requirements applicable to printed documents, such as paper size, type size and font, bold-face type, italics and red ink, by presenting all required information in a format readily communicated to offerees and, where indicated, in a manner reasonably calculated to draw the attention of offerees to specific information.

(f) *Offering Documents approved for use in offerings of Subordinated Debt to any Natural Person Accredited Investors*—(1) *Filing of a Draft Offering Document.* An Issuing Credit Union that intends to offer Subordinated Debt Notes to any Natural Person Accredited Investors must file a draft Offering Document with the NCUA and have such draft Offering Document declared ''approved for use'' by the NCUA before its first use.

(i) *Request for additional information, clarifications, or amendments.* Prior to declaring any Offering Document ''approved for use,'' the NCUA may ask

questions, request clarifications, or direct the Issuing Credit Union to amend certain sections of the draft Offering Document. The NCUA will make any such requests in writing.

(ii) *Written determination.* Within 60 calendar days (which may be extended by the NCUA) after the date of receipt of each of the initial filing and each filing of additional information, clarifications, or amendments requested by the NCUA under paragraph (f)(1)(i) of this section, the NCUA will provide the Issuing Credit Union with a written determination on the applicable filing. The written determination will include any requests for additional information, clarifications, or amendments, or a statement that the Offering Document is ''approved for use.''

(2) *Filing of a final Offering Document.* At such time as the NCUA declares an Offering Document ''approved for use'' in accordance with paragraph (f)(1)(ii) of this section, the Issuing Credit Union may then use that Offering Document in the offer and sale of the Subordinated Debt Notes. The Issuing Credit Union must file a copy of each of its Offering Documents with the NCUA within two business days after their respective first use.

(g) *Filing of an Offering Document for offerings of Subordinated Debt exclusively to Entity Accredited Investors.* An Issuing Credit Union that is offering Subordinated Debt exclusively to Entity Accredited Investors is not required to have its Offering Document ''approved for use'' by the NCUA under paragraph (f) of this section before using it to offer and sell the Subordinated Debt Notes. As described in this section, however, the Issuing Credit Union must file a copy of each of its Offering Documents with the NCUA within two business days after their respective first use.

(h) *Material changes to any initial application or Offering Document*—(1) *Reapproval of initial application.* If any material event arises or material change in fact occurs after the approval of the initial application by the NCUA, but prior to the completion of the offer and sale of the related Subordinated Debt Notes, then no person shall offer or sell Subordinated Debt Notes to any other person until an amendment to the Offering Document reflecting the event or change has been filed with and approved by the NCUA.

(2) *Reapproval of Offering Document.* If an Offering Document must be approved for use under paragraph (f) of this section, and any event arises or change in fact occurs after the approval for use of any Offering Document, and that event or change in fact, individually or in the aggregate, results in the Offering Document containing any untrue statement of material fact, or omitting to state a material fact necessary in order to make statements made in the Offering Document not misleading in light of the circumstances under which they were made, then no person shall offer or sell Subordinated Debt Notes to any other person until an amendment reflecting the event or change has been filed with and ''approved for use'' by the NCUA.

(3) *Failure to request reapproval.* If an Issuing Credit Union fails to comply with paragraph (h)(1) or (2) of this section, the NCUA may, at its discretion, exercise the full range of administrative remedies available under the FCU Act, including:

(i) Prohibiting the Issuing Credit Union from issuing any additional Subordinated Debt for a specified period; and/or

(ii) Determining not to treat the Subordinated Debt as Regulatory Capital.

(i) *Notification.* Not later than 10 business days after the closing of a Subordinated Debt Note issuance and sale, the Issuing Credit Union must submit to the Appropriate Supervision Office:

(1) A copy of each executed Subordinated Debt Note;

(2) A copy of each executed purchase agreement, if any;

(3) Any indenture or other transaction document used to issue the Subordinated Debt Notes;

(4) Copies of signed certificates of Accredited Investor status, in a form similar to that in § 702.406(c), from all investors;

(5) All documentation provided to investors related to the offer and sale of the Subordinated Debt Note (other than any Offering Document that was previously filed with the NCUA); and

(6) Any other material documents governing the issuance, sale or administration of the Subordinated Debt Notes.

(j) *Resubmissions.* An Issuing Credit Union that receives any adverse written determination from the Appropriate Supervision Office with respect to the approval of its initial application or any amendment thereto or, if applicable, the approval for use of an Offering Document or any amendment thereto, may cure any reasons noted in the written determination and refile under the requirements of this section. This subsection does not prohibit an Issuing Credit Union from appealing an Appropriate Supervision Office's decision under subpart A of part 746 of this chapter.

(k) *Expiration of authority to issue Subordinated Debt.* (1) Any approvals to issue Subordinated Debt Notes under this section expire one year from the later of the date the Issuing Credit Union receives:

(i) Approval of its initial application, if the Issuing Credit Union is offering Subordinated Notes exclusively to Entity Accredited Investors; or

(ii) The initial approval for use of its Offering Document, if the Issuing Credit Union is offering Subordinated Debt Notes to any Natural Person Accredited Investors.

(2) Failure to issue all or part of the maximum aggregate principal amount of Subordinated Debt Notes approved in the initial application process within the applicable period specified in paragraph (k) of this section will result in the expiration of the NCUA's approval. An Issuing Credit Union may file a written extension request with the Appropriate Supervision Office. The Issuing Credit Union must demonstrate good cause for any extension(s), and must file the request at least 30 calendar days before the expiration of the applicable period specified in paragraph (k) of this section or any extensions granted under paragraph (k) of this section. In any such written application, the Issuing Credit Union must address whether any such extension poses any material securities law implications.

(l) *Filing requirements and inspection of documents.* (1) Except as otherwise provided in this section, all initial applications, Offering Documents, amendments, notices, or other documents must be filed with the NCUA electronically at *http://www.NCUA.gov.* Documents may be signed electronically using the signature provision in Rule 402 under the Securities Act of 1933, as amended (17 CFR 230.402).

(2) Provided the Issuing Credit Union filing the document has complied with all requirements regarding the filing, the date of filing of the document is the date the NCUA receives the filing. An electronic filing that is submitted on a business day by direct transmission commencing on or before 5:30 p.m. Eastern Standard or Daylight Savings Time, whichever is then currently in effect, would be deemed received by the NCUA on the same business day. An electronic filing that is submitted by direct transmission commencing after 5:30 p.m. Eastern Standard or Daylight Savings Time, whichever is then currently in effect, or on a Saturday, Sunday, or Federal holiday, would be deemed received by the NCUA on the next business day. If an electronic filer in good faith attempts to file a document

with the NCUA in a timely manner, but the filing is delayed due to technical difficulties beyond the electronic filer's control, the electronic filer may request that the NCUA adjust the filing date of such document. The NCUA may grant the request if it appears that such adjustment is appropriate and consistent with the public interest and the protection of investors.

(3) If an Issuing Credit Union experiences unanticipated technical difficulties preventing the timely preparation and submission of an electronic filing, the Issuing Credit Union may, upon notice to the Appropriate Supervision Office, file the subject filing in paper format no later than one business day after the date on which the filing was to be made.

(4) Any filing of amendments or supplements to an Offering Document must include two copies, one of which must be marked to indicate clearly and precisely, by underlining or in some other conspicuous manner, the changes made from the previously filed Offering Document.

(m) *Filing fees.* (1) The NCUA may require filing fees to accompany certain filings made under this subpart before it will accept those filings. The NCUA provides an applicable fee schedule on its website at *www.NCUA.gov.*

(2) Filing fees must be paid to the NCUA by electronic transfer.

§ 702.409 Preapproval for federally insured, state-chartered credit unions to issue Subordinated Debt.

(a) A federally insured, state-chartered credit union is required to submit the information required under § 702.408 and, if applicable, paragraph (b) of this section to both the Appropriate Supervision Office and its state supervisory authority. The Appropriate Supervision Office will issue decisions approving a federally insured, state-chartered credit union's application only after obtaining the concurrence of the federally insured, state-chartered credit union's state supervisory authority. The NCUA will notify a federally insured, state-chartered credit union's state supervisory authority before issuing a decision to ''approve for use'' a federally insured, state-chartered credit union's Offering Document and any amendments thereto, under § 702.408, if applicable.

(b) If the Appropriate Supervision Office has reason to believe that an issuance by a federally insured, state-chartered credit union under this subpart could subject that federally insured, state-chartered credit union to federal income taxation, the Appropriate Supervision Office may require the federally insured, state-chartered credit union to provide:

(1) A written legal opinion, satisfactory to the NCUA, from nationally recognized tax counsel or letter from the Internal Revenue Service indicating whether the proposed Subordinated Debt would be classified as capital stock for federal income tax purposes and, if so, describing any material impact of federal income taxes on the federally insured, state-chartered credit union's financial condition; or

(2) A Pro Forma Financial Statement (balance sheet, income statement, and statement of cash flows), covering a minimum of five years, that shows the impact of the federally insured, state-chartered credit union being subject to federal income tax.

(c) If the Appropriate Supervision Office requires additional information from a federally insured, state-chartered credit union under paragraph (b) of this section, the federally insured, state-chartered credit union may determine, in its sole discretion, whether the information it provides is in the form described in paragraph (b)(1) or (2) of this section.

§ 702.410 Interest payments on Subordinated Debt.

(a) *Requirements for interest payments.* An Issuing Credit Union is prohibited from paying interest on Subordinated Debt in accordance with § 702.109.

(b) *Accrual of interest.* Notwithstanding nonpayment pursuant to paragraph (a) of this section, interest on the Subordinated Debt may continue to accrue according to terms provided for in the Subordinated Debt Note and as otherwise permitted in this subpart.

(c) *Interest safe harbor.* Except as otherwise provided in this section, the NCUA shall not impose a discretionary supervisory action that requires the Issuing Credit Union to suspend interest with respect to the Subordinated Debt if:

(1) The issuance and sale of the Subordinated Debt complies with all requirements of this subpart;

(2) The Subordinated Debt is issued and sold in an arms-length, bona fide transaction;

(3) The Subordinated Debt was issued and sold in the ordinary course of business, with no intent to hinder, delay or defraud the Issuing Credit Union or its creditors; and

(4) The Subordinated Debt was issued and sold for adequate consideration in U.S. dollars.

(d) *Authority, rights, and powers of the NCUA and the NCUA Board.* This section does not waive, limit, or otherwise affect the authority, rights, or powers of the NCUA or the NCUA Board in any capacity, including the NCUA Board as conservator or liquidating agent, to take any action or to exercise any power not specifically mentioned, including but not limited to any rights, powers or remedies of the NCUA Board as conservator or liquidating agent regarding transfers or other conveyances taken in contemplation of the Issuing Credit Union's insolvency or with the intent to hinder, delay or defraud the Issuing Credit Union or the creditors of such Issuing Credit Union, or that is fraudulent under applicable law.

§ 702.411 Prior written approval to prepay Subordinated Debt.

(a) *Prepayment option.* An Issuing Credit Union may include in the terms of its Subordinated Debt an option that allows the Issuing Credit Union to prepay the Subordinated Debt in whole or in part prior to maturity, provided, however, that the Issuing Credit Union is required to:

(1) Clearly disclose the requirements of this section in the Subordinated Debt Note; and

(2) Obtain approval under paragraph (b) of this section before exercising a prepayment option.

(b) *Prepayment application.* Before an Issuing Credit Union can, in whole or in part, prepay Subordinated Debt prior to maturity, the Issuing Credit Union must first submit to the Appropriate Supervision Office an application that must include, at a minimum, the information required in paragraph (d) of this section.

(c) *Federally insured, state-chartered credit union prepayment applications.* Before a federally insured, state-chartered credit union may submit an application for prepayment to the Appropriate Supervision Office, it must obtain written approval from its state supervisory authority to prepay the Subordinated Debt it is proposing to prepay. A federally insured, state-chartered credit union must provide evidence of such approval as part of its application to the Appropriate Supervision Office.

(d) *Application contents.* An Issuing Credit Union's application to prepay Subordinated Debt must include, at a minimum, the following:

(1) A copy of the Subordinated Debt Note and any agreement(s) reflecting the terms and conditions of the Subordinated Debt the Issuing Credit Union is proposing to prepay;

(2) An explanation why the Issuing Credit Union believes it still would hold an amount of capital commensurate with its risk exposure notwithstanding

the proposed prepayment or a description of the replacement Subordinated Debt, including the amount of such instrument, and the time frame for issuance, the Issuing Credit Union is proposing to use to replace the prepaid Subordinated Debt; and

(3) Any additional information the Appropriate Supervision Office requests.

(e) *Decision on application to prepay.* (1) Within 45 calendar days (which may be extended by the Appropriate Supervision Office) after the date of receipt of a complete application, the Appropriate Supervision Office will provide the Issuing Credit Union with a written determination on its application. In the case of a full or partial denial, including a conditional approval under paragraph (e)(2) of this section, the written decision will state the reasons for the denial or conditional approval.

(2) The written determination from the Appropriate Supervision Office may approve the Issuing Credit Union's request, approve the Issuing Credit Union's request with conditions, or deny the Issuing Credit Union's request. In the case of a denial or conditional approval, the Appropriate Supervision Office will provide the Issuing Credit Union with a description of why it denied the Issuing Credit Union's request or imposed conditions on the approval of such request.

(3) If the Issuing Credit Union proposes or the NCUA requires the Issuing Credit Union to replace the Subordinated Debt, the Issuing Credit Union must receive affirmative approval under this subpart and must issue and sell the replacement instrument prior to or concurrently with prepaying the Subordinated Debt.

(f) *Resubmissions.* An Issuing Credit Union that receives an adverse written determination on its application to prepay, in whole or in part, may cure any deficiencies noted in the Appropriate Supervision Office's written determination and reapply under the requirements of this section. This subsection does not prohibit an Issuing Credit Union from appealing the Appropriate Supervision Office's adverse decision under subpart A of part 746 of this chapter.

§ 702.412 Effect of a merger or dissolution on the treatment of Subordinated Debt as Regulatory Capital.

(a) In the event of a merger of an Issuing Credit Union into or the assumption of its Subordinated Debt by another federally insured credit union, the Subordinated Debt will be treated as Regulatory Capital only to the extent that the resulting credit union is either a LICU, a Complex Credit Union, and/or a New Credit Union.

(b) In the event the resulting credit union is not a LICU, a Complex Credit Union, or a New Credit Union, the Subordinated Debt of the merging credit union can either be:

(1) If permitted by the terms of the Subordinated Debt Note, repaid by the resulting credit union upon approval by the NCUA under § 702.411; or

(2) Continue to be held by the resulting credit union as Subordinated Debt, but will not be classified as Regulatory Capital under this subpart, unless the resulting credit union meets the eligibility requirements of § 702.403.

(c) *Voluntary liquidation.* In the event of a voluntary dissolution of an Issuing Credit Union that has outstanding Subordinated Debt, the Subordinated Debt may be repaid in full according to 12 CFR part 710, subject to the requirements in § 702.411.

§ 702.413 Repudiation safe harbor.

(a) The NCUA Board as conservator for a federally insured credit union, or its lawfully appointed designee, shall not exercise its repudiation authorities under 12 U.S.C. 1787(c) with respect to Subordinated Debt if:

(1) The issuance and sale of the Subordinated Debt complies with all requirements of this subpart;

(2) The Subordinated Debt was issued and sold in an arms-length, bona fide transaction;

(3) The Subordinated Debt was issued and sold in the ordinary course of business, with no intent to hinder, delay or defraud the Issuing Credit Union or its creditors; and

(4) The Subordinated Debt was issued and sold for adequate consideration in U.S. dollars.

(b) This section does not authorize the attachment of any involuntary lien upon the property of either the NCUA Board as conservator or liquidating agent or its lawfully appointed designee. Nor does this section waive, limit, or otherwise affect the authority, rights, or powers of the NCUA or the NCUA Board in any capacity to take any action or to exercise any power not specifically mentioned, including but not limited to any rights, powers or remedies of the NCUA Board as conservator or liquidating agent (or its lawfully appointed designee) regarding transfers or other conveyances taken in contemplation of the Issuing Credit Union's insolvency or with the intent to hinder, delay or defraud the Issuing Credit Union or the creditors of such Issuing Credit Union, or that is fraudulent under applicable law.

§ 702.414 Regulations governing Grandfathered Secondary Capital.

This section codifies the requirements of §§ 701.34(b), (c), and (d) of this chapter in subpart D, with minor modifications, in effect before [EFFECTIVE DATE OF THE FINAL RULE]. The terminology used in this section is specific to this section. All secondary capital issued before the effective date of this rule that was issued in accordance with §§ 701.34(b), (c), and (d) of this chapter in subpart D or, in the case of a federally insured, state-chartered credit union, § 741.204(c) of this chapter, that is referred to elsewhere in this subpart as ''Grandfathered Secondary Capital,'' is subject to the requirements set forth in this section.

(a) Secondary capital is subject to the following conditions:

(1) *Secondary capital plan.* A credit union that has Grandfathered Secondary Capital under this section must have a written, NCUA-approved ''Secondary Capital Plan'' that, at a minimum:

(i) States the maximum aggregate amount of uninsured secondary capital the LICU plans to accept;

(ii) Identifies the purpose for which the aggregate secondary capital will be used, and how it will be repaid;

(iii) Explains how the LICU will provide for liquidity to repay secondary capital upon maturity of the accounts;

(iv) Demonstrates that the planned uses of secondary capital conform to the LICU's strategic plan, business plan and budget; and

(v) Includes supporting pro forma financial statements, including any off-balance sheet items, covering a minimum of the next two years.

(2) *Issuances not completed before* [EFFECTIVE DATE OF THE FINAL RULE]. Any issuances of secondary capital not completed by the effective date of this subpart are, as of the effective date of this subpart, subject to the requirements applicable to Subordinated Debt discussed elsewhere in this subpart.

(3) *Nonshare account.* The secondary capital account is established as an uninsured secondary capital account or other form of non-share account.

(4) *Minimum maturity.* The maturity of the secondary capital account is a minimum of five years.

(5) *Uninsured account.* The secondary capital account is not insured by the National Credit Union Share Insurance Fund or any governmental or private entity.

(6) *Subordination of claim.* The secondary capital account investor's claim against the LICU is subordinate to all other claims including those of

shareholders, creditors and the National Credit Union Share Insurance Fund.

(7) *Availability to cover losses.* Funds deposited into a secondary capital account, including interest accrued and paid into the secondary capital account, are available to cover operating losses realized by the LICU that exceed its net available reserves (exclusive of secondary capital and allowance accounts for loan and lease losses), and to the extent funds are so used, the LICU must not restore or replenish the account under any circumstances. The LICU may, in lieu of paying interest into the secondary capital account, pay accrued interest directly to the investor or into a separate account from which the secondary capital investor may make withdrawals. Losses must be distributed pro-rata among all secondary capital accounts held by the LICU at the time the losses are realized. In instances where a LICU accepted secondary capital from the United States Government or any of its subdivisions under the Community Development Capital Initiative of 2010 (''CDCI secondary capital'') and matching funds were required under the Initiative and are on deposit in the form of secondary capital at the time a loss is realized, a LICU must apply either of the following pro-rata loss distribution procedures to its secondary capital accounts with respect to the loss:

(i) If not inconsistent with any agreements governing other secondary capital on deposit at the time a loss is realized, the CDCI secondary capital may be excluded from the calculation of the pro-rata loss distribution until all of its matching secondary capital has been depleted, thereby causing the CDCI secondary capital to be held as senior to all other secondary capital until its matching secondary capital is exhausted. The CDCI secondary capital should be included in the calculation of the pro-rata loss distribution and is available to cover the loss only after all of its matching secondary capital has been depleted.

(ii) Regardless of any agreements applicable to other secondary capital, the CDCI secondary capital and its matching secondary capital may be considered a single account for purposes of determining a pro-rata share of the loss and the amount determined as the pro-rata share for the combined account must first be applied to the matching secondary capital account, thereby causing the CDCI secondary capital to be held as senior to its matching secondary capital. The CDCI secondary capital is available to cover the loss only after all of its matching secondary capital has been depleted.

(8) *Security.* The secondary capital account may not be pledged or provided by the account investor as security on a loan or other obligation with the LICU or any other party.

(9) *Merger or dissolution.* In the event of merger or other voluntary dissolution of the LICU, other than merger into another LICU, the secondary capital accounts will be closed and paid out to the account investor to the extent they are not needed to cover losses at the time of merger or dissolution.

(10) *Contract agreement.* A secondary capital account contract agreement must have been executed by an authorized representative of the account investor and of the LICU reflecting the terms and conditions mandated by this section and any other terms and conditions not inconsistent with this section.

(11) *Disclosure and acknowledgement.* An authorized representative of the LICU and of the secondary capital account investor each must have executed a ''Disclosure and Acknowledgment'' as set forth in the appendix to this section at the time of entering into the account agreement. The LICU must retain an original of the account agreement and the ''Disclosure and Acknowledgment'' for the term of the agreement, and a copy must be provided to the account investor.

(12) *Prompt corrective action.* As provided in this part, the NCUA may prohibit a LICU as classified ''critically undercapitalized'' or, if ''new,'' as ''moderately capitalized'', ''marginally capitalized'', ''minimally capitalized'' or ''uncapitalized,'' as the case may be, from paying principal, dividends or interest on its uninsured secondary capital accounts established after August 7, 2000, 'except that unpaid dividends or interest will continue to accrue under the terms of the account to the extent permitted by law.

(b) *Accounting treatment; Recognition of net worth value of accounts*—(1) *Debt.* A LICU that issued secondary capital accounts pursuant to paragraph (a) of this section must record the funds on its balance sheet as a debt titled ''uninsured secondary capital account.''

(2) *Schedule for recognizing net worth value.* The LICU's reflection of the net worth value of the accounts in its financial statement may never exceed the full balance of the secondary capital on deposit after any early redemptions and losses. For accounts with remaining maturities of less than five years, the LICU must reflect the net worth value of the accounts in its financial statement in accordance with the lesser of:

(i) The remaining balance of the accounts after any redemptions and losses; or

(ii) The amounts calculated based on the following schedule:

Remaining maturity	Net worth value of original balance (percent)
Four to less than five years	80
Three to less than four years ...	60
Two to less than three years	40
One to less than two years	20
Less than one year	0

(3) *Financial statement.* The LICU must reflect the full amount of the secondary capital on deposit in a footnote to its financial statement.

(c) *Redemption of secondary capital.* With the written approval of NCUA, secondary capital that is not recognized as net worth under paragraph (b)(2) of this section (''discounted secondary capital'' re-categorized as Subordinated Debt) may be redeemed according to the remaining maturity schedule in paragraph (c)(3) of this section.

(1) *Request to redeem secondary capital.* A request for approval to redeem discounted secondary capital may be submitted in writing at any time, must specify the increment(s) to be redeemed and the schedule for redeeming all or any part of each eligible increment, and must demonstrate to the satisfaction of NCUA that:

(i) The LICU will have a post-redemption net worth classification of at least ''adequately capitalized'' under this part;

(ii) The discounted secondary capital has been on deposit at least two years;

(iii) The discounted secondary capital will not be needed to cover losses prior to final maturity of the account;

(iv) The LICU's books and records are current and reconciled;

(v) The proposed redemption will not jeopardize other current sources of funding, if any, to the LICU; and

(vi) The request to redeem is authorized by resolution of the LICU's board of directors.

(2) *Decision on request.* A request to redeem discounted secondary capital may be granted in whole or in part. If a LICU is not notified within 45 days of receipt of a request for approval to redeem secondary capital that its request is either granted or denied, the LICU may proceed to redeem secondary capital accounts as proposed.

(3) *Schedule for redeeming secondary capital.*

Remaining maturity	Redemption limit as percent of original balance
Four to less than five years	20
Three to less than four years ...	40
Two to less than three years	60
One to less than two years	80

(4) *Early redemption exception.* Subject to the written approval of NCUA obtained pursuant to the requirements of paragraphs (c)(1) and (2) of this section, a LICU can redeem all or part of secondary capital accepted from the United States Government or any of its subdivisions at any time after the secondary capital has been on deposit for two years. If the secondary capital was accepted under conditions that required matching secondary capital from a source other than the Federal Government, the matching secondary capital may also be redeemed in the manner set forth in the preceding sentence. For purposes of obtaining NCUA's approval, all secondary capital a LICU accepts from the United States Government or any of its subdivisions, as well as its matching secondary capital, if any, is eligible for early redemption regardless of whether any part of the secondary capital has been discounted pursuant to paragraph (b)(2) of this section.

Appendix A to Subpart D of Part 702—Disclosure and Acknowledgement Form

A LICU that is authorized to accept uninsured secondary capital accounts and each investor in such an account must have executed and dated the following ''Disclosure and Acknowledgment'' form, a signed original of which must be retained by the credit union:

Disclosure and Acknowledgment

[Name of CU] and [Name of investor] hereby acknowledge and agree that [Name of investor] has committed [amount of funds] to a secondary capital account with [name of credit union] under the following terms and conditions:

1. *Term.* The funds committed to the secondary capital account are committed for a period of __ years.

2. *Redemption prior to maturity.* Subject to the conditions set forth in 12 CFR 702.414, the funds committed to the secondary capital account are redeemable prior to maturity only at the option of the LICU and only with the prior written approval of NCUA.

3. *Uninsured, non-share account.* The secondary capital account is not a share account and the funds committed to the secondary capital account are not insured by the National Credit Union Share Insurance Fund or any other governmental or private entity.

4. *Prepayment risk.* Redemption of U.S.C. prior to the account's original maturity date may expose the account investor to the risk of being unable to reinvest the repaid funds at the same rate of interest for the balance of the period remaining until the original maturity date. The investor acknowledges that it understands and assumes responsibility for prepayment risk associated with the [name of credit union]'s redemption of the investor's U.S.C. account prior to the original maturity date.

5. *Availability to cover losses.* The funds committed to the secondary capital account and any interest paid into the account may be used by [name of credit union] to cover any and all operating losses that exceed the credit union's net worth exclusive of allowance accounts for loan losses, and in the event the funds are so used, (name of credit union) will under no circumstances restore or replenish those funds to [name of institutional investor]. Dividends are not considered operating losses and are not eligible to be paid out of secondary capital.

6. *Accrued interest.* By initialing below, [name of credit union] and [name of institutional investor] agree that accrued interest will be:

____Paid into and become part of the secondary capital account;
____Paid directly to the investor;
____Paid into a separate account from which the investor may make withdrawals; or
____Any combination of the above provided the details are specified and agreed to in writing.

7. *Subordination of claims.* In the event of liquidation of [name of credit union], the funds committed to the secondary capital account will be subordinate to all other claims on the assets of the credit union, including claims of member shareholders, creditors and the National Credit Union Share Insurance Fund.

8. *Prompt Corrective Action.* Under certain net worth classifications (see 12 CFR 702.204(b)(11), 702.304(b) and 702.305(b), as the case may be), the NCUA may prohibit [name of credit union] from paying principal, dividends or interest on its uninsured secondary capital accounts established after August 7, 2000, except that unpaid dividends or interest will continue to accrue under the terms of the account to the extent permitted by law.

ACKNOWLEDGED AND AGREED TO this __ day of [month and year] by:

_____
[name of investor's official]
[title of official]
[name of investor]
[address and phone number of investor]
[investor's tax identification number]

_____
[name of credit union official]
[title of official]

PART 709—INVOLUNTARY LIQUIDATION OF FEDERAL CREDIT UNIONS AND ADJUDICATION OF CREDITOR CLAIMS INVOLVING FEDERALLY INSURED CREDIT UNIONS IN LIQUIDATION

■ 14. The authority citation for part 709 continues to read as follows:

Authority: 12 U.S.C. 1757, 1766, 1767, 1786(h), 1786(t), and 1787(b)(4), 1788, 1789, 1789a.

■ 15. Amend § 709.5 by revising paragraph (b)(8) to read as follows:

§ 709.5 Payout priorities in involuntary liquidation.

* * * * *

(b) * * *

(8) Outstanding Subordinated Debt (as defined in part 702 of this chapter) or outstanding Grandfathered Secondary Capital (as defined in part 702 of this chapter); and

* * * * *

PART 741—REQUIREMENTS OF INSURANCE

■ 16. The authority citation for part 741 continues to read as follows:

Authority: 12 U.S.C. 1757, 1766(a), 1781–1790, and 1790d; 31 U.S.C. 3717.

■ 17. Amend § 741.204 by revising paragraph (c) and removing paragraph (d) to read as follows:

§ 741.204 Maximum public unit and nonmember accounts, and low-income designation.

* * * * *

(c) Follow the requirements of § 702.414 for any Grandfathered Secondary Capital (as defined in part 702 of this chapter) issued before [EFFECTIVE DATE OF THE FINAL REGULATION].

■ 18. Add §§ 741.226 and 741.227 to read as follows:

§ 741.226 Subordinated Debt.

Any credit union that is insured, or that makes application for insurance, pursuant to title II of the Act must follow the requirements of subpart D of part 702 of this chapter before it may issue Subordinated Debt, as that term is defined in § 702.402 of this chapter, and to the extent not inconsistent with applicable state law and regulation; and

§ 741.227 Loans to credit unions.

Any credit union that is insured pursuant to Title II of the Act must adhere to the requirements in § 701.25 of this chapter.

[FR Doc. 2020–01537 Filed 3–9–20; 8:45 am]

BILLING CODE 7535–01–P

FEDERAL REGISTER

Vol. 85 Tuesday,

No. 47 March 10, 2020

Part III

Department of Transportation

Federal Railroad Administration

49 CFR 299

Texas Central Railroad High-Speed Rail Safety Standards; Proposed Rule

DEPARTMENT OF TRANSPORTATION

Federal Railroad Administration

49 CFR Part 299

[Docket No. FRA–2019–0068, Notice 1]

RIN 2130–AC84

Texas Central Railroad High-Speed Rail Safety Standards

AGENCY: Federal Railroad Administration (FRA), Department of Transportation (DOT).

ACTION: Notice of proposed rulemaking; rule of particular applicability.

SUMMARY: FRA is proposing a rule of particular applicability (RPA) to establish safety standards for the Texas Central Railroad (TCRR or the railroad) high speed rail system. The proposed standards are not intended for general application in the railroad industry, but would apply only to the TCRR system planned for development in the State of Texas. The proposed RPA takes a systemsapproach to safety, and so includes standards that address all aspects of the TCRR high-speed system, including signal and trainset control, track, rolling stock, operating practices, system qualifications, and maintenance. The TCRR system is planned to operate from Houston to Dallas, on dedicated track, with no grade crossings, at speeds not to exceed 330 km/h (205 mph). The TCRR rolling stock, track, and core systems will replicate the Central Japan Railway Company (JRC), Tokaido Shinkansen high-speed rail system, and will be used exclusively for revenue passenger service.

DATES: Written comments must be received by May 11, 2020. Comments received after that date will be considered to the extent possible without incurring additional expense or delay.

FRA anticipates holding three public hearings to receive oral comment on this NPRM, and that proceedings will also be necessary under 49 U.S.C. 20306. FRA will publish a separate announcement in the **Federal Register** to inform interested parties of the date, time, and location of these hearings.

ADDRESSES: *Comments:* Comments related to Docket No. FRA–2019–0068, Notice No. 1, may be submitted by any of the following methods:

- *Federal eRulemaking Portal:* Go to http://www.regulations.gov and follow the online instructions for submitting comments;
- *Fax:* 202–493–2251;
- *Mail:* Docket Management Facility, U.S. Department of Transportation, 1200 New Jersey Avenue SE, Room W12–140, Washington, DC 20590; or
- *Hand Delivery:* Docket Management Facility, U.S. Department of Transportation, 1200 New Jersey Avenue SE, Room W12–140 is located on the ground level of the West Building, between 9 a.m. and 5 p.m., Monday through Friday, except Federal holidays.

Instructions: All submissions must include the agency name and docket number or Regulatory Identification Number (RIN) for this rulemaking (2130–AC84). Note that all comments received will be posted without change to *http://www.regulations.gov,* including any personal information provided. Please see the Privacy Act heading in the **SUPPLEMENTARY INFORMATION** section of this document for Privacy Act information related to any submitted comments or materials.

Docket: For access to the docket to read background documents or comments received, go to *http://www.regulations.gov* at any time or visit the Docket Management Facility, U.S. Department of Transportation, 1200 New Jersey Avenue SE, Room W12–140 on the Ground level of the West Building, between 9 a.m. and 5 p.m., Monday through Friday, except Federal holidays.

FOR FURTHER INFORMATION CONTACT: Frederick Mottley, Systems Engineer, U.S. Department of Transportation, Federal Railroad Administration, Office of Railroad Safety, 1200 New Jersey Avenue SE, Washington, DC 20590 (telephone: (617) 494–3160); or Michael Hunter, Attorney Adviser, U.S. Department of Transportation, Federal Railroad Administration, Office of Chief Counsel, 1200 New Jersey Avenue SE, Washington, DC 20590 (telephone: (202) 493–0368).

SUPPLEMENTARY INFORMATION:

Table of Contents

I. Executive Summary
II. Statutory Authority
III. Regulatory Approach
IV. Project Background and Regulatory Development
A. History of Tokaido Shinkansen
B. RPA Development Process
C. The Proposed System
1. Rolling Stock
2. Automatic Train Control System
3. Track Safety Standards
4. Maintenance-of-Way Operations
5. System Qualification
6. Personnel Qualification
7. Inspection, Testing, and Maintenance
8. Operating Rules and Practices
D. Applicability of FRA's Current Regulations
E. Incorporation by Reference
F. Enforcement
V. Regulatory Impact and Notices
A. Executive Orders 12866 and 13771, and DOT Regulatory Policies and Procedures
B. Regulatory Flexibility Act and Executive Order 13272; Regulatory Flexibility Assessment
C. Paperwork Reduction Act
D. Federalism Implications
E. International Trade Impact Assessment
F. Environmental Impact
G. Executive Order 12898 (Environmental Justice)
H. Executive Order 13175 (Tribal Consultation)
I. Unfunded Mandates Reform Act of 1995
J. Energy Impact
K. Privacy Act Statement

I. Executive Summary

On August 30, 2019, FRA granted TCRR's petition for rulemaking (petition), which was submitted April 15, 2016. TCRR's petition represented that the regulatory requirements offered by TCRR translate the technological and operational aspects of the JRC Tokaido Shinkansen system.

The Tokaido Shinkansen first went into service on October 1, 1964, under the operation of the Japanese National Railways (JNR). On April 1, 1987, JNR was privatized and split into six passenger railroads and a freight railroad. JRC was the company that took over operations of the Tokaido Shinkansen system, and is still operating the system today. In 50+ years of Tokaido Shinkansen system operations, JNR, and now JRC, have optimized its operations to a very high level of performance. Accordingly, the Shinkansen has moved over 6 billion passengers without a passenger fatality or injury due to trainset accidents such as a derailment or collision.

TCRR intends to implement a high-speed passenger rail system, based upon the service-proven technology used on the Tokaido Shinkansen and replicating the operational and maintenance practices and procedures employed by JRC. TCRR plans to implement the latest, service-proven derivative of the N700 trainset and other core systems currently in use on the Tokaido Shinkansen line,[1] which have been refined for high-speed operations over the last 50+ years. TCRR plans to adapt the N700 series trainset and supporting systems in a manner that is appropriate for the Texas environment and operate under a regulatory framework that enables FRA to provide effective safety oversight.

Additionally, FRA has prepared an analysis of the economic impact of this

[1] Subsequent references to ''N700'' or ''N700 series trainset'' are meant to refer to the N700 series trainset currently in, or future variants approved for, use.

proposed rule under section V.A., below. FRA concluded that because the NPRM generally includes only voluntary actions, or alternative action that would be voluntary, the NPRM does not impart additional burdens on TCRR.

II. Statutory Authority

Under the Federal railroad safety laws, FRA has jurisdiction over all railroads, as defined in 49 U.S.C. 20102, except urban rapid transit operations that are not connected to the general railroad system of transportation. Moreover, FRA would consider a stand-alone intercity railroad line to be part of the general system, even though not physically connected to other railroads (as FRA has previously stated with respect to the Alaska Railroad; *see* 49 CFR part 209, appendix A). FRA considers the contemplated TCRR system as intercity passenger rail, not urban rapid transit. Accordingly, the TCRR system will be subject to FRA jurisdiction whether it is connected to the general railroad system or not. Please see FRA's policy statement discussing in greater detail FRA's jurisdiction over passenger railroads, which includes discussion on how FRA's characterizes passenger operations, contained at 49 CFR part 209, appendix A.

FRA has a regulatory program in place, pursuant to its statutory authority, to address equipment, track, operating practices, and human factors in the existing, conventional railroad environment. However, significant operational and equipment differences exist between the system proposed for Texas and existing passenger operations in the United States. In many of the railroad safety disciplines, FRA's existing regulations do not address the safety concerns and operational peculiarities of the proposed TCRR system. Therefore, in order to allow TCRR to operate with effective safety oversight, an alternative regulatory approach is required.

III. Regulatory Approach

Consistent with its statement in the most recent Passenger Equipment Safety Standards final rule, published November 21, 2018 (83 FR 59182), FRA proposes to regulate the TCRR system as a standalone system under this enabling rule. FRA stated that a standalone system regulation would have to bring together all aspects of railroad safety (such as operating practices, signal and trainset control, and track) that must be applied to the individual system. *See* 83 FR 59182, 59186. Such an approach covers more than passenger equipment, and would likely necessitate particular right-of-way intrusion protection and other safety requirements not adequately addressed in FRA's regulations. FRA continues to believe that addressing proposals for standalone high-speed rail systems on a case-by-case basis and comprehensively (such as through an RPA or other specific regulatory action(s)) is prudent because of the small number of potential operations, and the potential for significant and unique differences in their design. Entities considering such operations voluntarily assume the higher costs of building new infrastructure, knowing they cannot take advantage of the cost savings from sharing existing infrastructure.

Alternatively, FRA could issue a comprehensive set of waivers from FRA's existing regulations, to the extent permitted by law, under 49 U.S.C. 20103(b), in order to provide regulatory approval to the operation. However, in this case, electing to develop and publish a comprehensive regulation is a more efficient alternative. Such a regulation, in addition to providing regulatory approval, institutes a comprehensive regulatory framework, that provides TCRR clarity on the minimum Federal safety standards that it must comply with through technology-specific requirements, incorporating the service-proven aspects of the Tokaido Shinkansen system. Additionally, it provides the railroad a higher degree of regulatory certainty than would waivers, as waivers are revocable, subject to changing conditions, and necessitate renewal, generally every five years.

IV. Project Background and Regulatory Development

TCRR plans to construct and operate a high-speed rail system running approximately 240 miles from Houston, TX, to Dallas, TX, with a stop in Grimes County east of College Station, TX. The system's trainset will travel on dedicated rail, with no public grade crossings, in exclusive passenger service, at speeds not to exceed 330 km/h (205 mph). These operational characteristics, and the equipment that TCRR plans to use, mark a significant technological advancement in regional, high-speed, passenger rail service in the United States.

The system TCRR proposes to build in Texas will replicate the service-proven Japanese Tokaido Shinkansen high-speed rail system, as operated by JRC. TCRR is modeling its system on the Tokaido Shinkansen system because of its reputation as being one of the safest and most punctual train systems in the world over its 50-year history. TCRR seeks to model its operation on JRC's operational and maintenance practices and philosophies, and utilize the high-speed technology that was developed and refined in Japan, known as the Shinkansen N700 series (Shinkansen or N700). The Shinkansen series of high-speed trainsets has been in service in Japan since 1964 and has safely carried over 6 billion passengers with no passenger fatalities or injuries due to trainset accidents/incidents such as a derailment or collision in while in revenue train operations. The N700 series was first introduced by JRC in 2007.

This is a traditional rail system, in the sense that steel wheels operate over steel rails, powered by electrical power that is carried and transferred to the equipment through an overhead catenary system. However, the Tokaido Shinkansen system is engineered to maximize the advantage of its dedicated environment, resulting in rolling stock that is much lighter than conventional rail vehicles; track conditions that are tuned specifically to low-mass, high-speed operations; and advanced aerodynamic technology that facilitates travel at very high speeds, with minimal track and equipment degradation.

The lightweight design of the equipment permits exceptional performance and safety for high-speed travel, but also lends itself to inherent deficiencies if exposed to many of the risks presented by conventional lines, such as a train-to-train collision or a grade crossing accident, particularly where heavy freight or commercial vehicles are present. To counter this aspect of the design, the Tokaido Shinkansen system and N700 series of trainsets are operated with a focus on collision avoidance, utilizing a systems-approach to safety to mitigate or eliminate potential risks through the design of the entire system as a whole, rather than focusing on individual aspects of an operation (*e.g.,* rolling stock crashworthiness). This approach to eliminating or mitigating risks and hazards through design has an inherent safety that has proven to be incredibly successful. (It is also important to note that the Texas system will be prohibited, as proposed in this NPRM, from allowing any freight traffic on its system.) The Shinkansen is equipped with an advanced trainset control system that is optimized for the high-speed operations. The Shinkansen system has an exceedingly safe record, which is discussed in greater detail below.

A. History of the Tokaido Shinkansen

The term ''Shinkansen'' is used to denote the Japanese high-speed rail system, also known as the ''bullet train.'' The Japan National Railway system was privatized into six passenger railways in 1986. The name ''Tokaido Shinkansen'' is the initial high-speed trainset system introduced in 1964. It is now owned and operated by JRC.

The Tokaido Shinkansen operates high-speed service between Tokyo and Shin-Osaka, a route that is 515 km long, at a maximum operating speed of 270 km/h (168 mph).[2] With 17 passenger stations on the system, the operation includes 368 daily departures. Although TCRR is replicating the Tokaido Shinkansen system, FRA notes that some of the N700 trainsets also travel over the Sanyo Shinkansen system between Shin-Osaka and Hakata, a route that is 554 km in length, which is operated by the West Japan Railway Company. The maximum operating speed is 300 km/h on the Sanyo Shinkansen.

Each 16-car trainset on the Tokaido Shinkansen is equipped with 1,323 seats. According to JRC, the annual ridership in 2017 was 170 million passengers, or 466,000 passengers per day. In over 50 years of service, the Shinkansen has moved over 6 billion passengers and traveled over 632 million rolling stock miles. The minimum headway between high-speed trainsets is 3 minutes 15 seconds during peak travel times. The average annual delay of trainsets is less than 1 minute.

B. RPA Petition Development Process

In March 2014, TCRR sought FRA's technical assistance in the development of a rulemaking petition. In order to assist TCRR with its effort, an RPA Working Group was established consisting of Core Team members from both TCRR and FRA. For discipline-specific discussions, the RPA Core Team was able to call upon the technical expertise of subject matter experts to discuss the technical justifications for departures from existing U.S. requirements or minor modifications to the JRC practices as adapted for the smaller system[3] proposed in Texas. The RPA Working Group held 25 meetings from March 2014 to April 2016,[4] [5] to discuss specific topics to be covered by the proposed RPA. The final work product of these meetings is the proposed rule text and supporting documentation included in the rulemaking docket.

On April 15, 2016, TCRR submitted to FRA its petition for an RPA to address the safe operation of a high-speed rail system in Texas, based on the Japanese Shinkansen technology. TCRR supplemented its petition in August 2016, and again in September 2017. *See* FRA Docket No. FRA–2019–0068.

TCRR's petition contained proposed regulatory text—along with supporting technical data—providing a regulatory framework that applies the holistic ''systems'' approach. Specifically, through its petition, TCRR has translated and adapted the technology specific aspects of the Tokaido Shinkansen system into a format that enables effective regulatory oversight by FRA. The Tokaido Shinkansen operation ensures safe operations through application of a systems approach to safety and accident avoidance philosophy. Safety can only be ensured through a holistic approach; attention to or focus on individual aspects of the operation alone may not be sufficient. TCRR used in its development of its rulemaking petition, a previous proposed RPA for the Florida Overland eXpress (62 FR 65478), to help identify the regulatory needs of the proposed high-speed system operations, which are not currently covered by a consistent set of regulatory requirements.

FRA granted TCRR's rulemaking petition on August 30, 2019, stating that it would undertake this rulemaking process.

C. The Proposed System

TCRR will replicate the Tokaido Shinkansen system and its essential technologies in Texas. The TCRR system will be based on accident avoidance principles to assure that collisions or other operational risks and hazards are eliminated or reduced to the highest degree possible, as is done in Japan. The system includes a dedicated, grade-separated, and fully fenced right-of-way, equipped with intrusion detection capabilities to detect the intrusion of unauthorized vehicles into the right-of-way. It is designed to facilitate only high-speed rail trainsets of a specific type on the right-of-way during revenue operations, with a strict temporal separation of maintenance activities. The system will have no at-grade crossings with any other rail system or surface transportation modes, such as highway vehicles. This approach ensures that the complete system mitigates any potential risks and is consistent with the N700 series trainsets that have been chosen as the service-proven rolling stock platform for TCRR.

This proposed rule requires the TCRR system to implement all the service-proven, safety-critical aspects of the Japanese Shinkansen system. It also provides for the FRA approval of the key system elements as implemented in Texas. The proposed rule text incorporates the structural characteristics of the N700 series trainset in a manner that can be regulated and enforced by FRA, and requires the system to be designed, operated, and maintained in a manner that effectively mitigates any hazard that could compromise the integrity of the trainset. Implementing the N700 series trainsets as they are currently designed (with minor modifications that do not impact the safety performance of the trainset, as further discussed below), along with the accident mitigation measures required by a systems approach and defined in the proposed rule text, will allow TCRR to replicate the service-proven system and operations of the Tokaido Shinkansen system.

FRA makes clear that this rule proposes to codify standards and practices unique to JRC's operations that are inherent to the safe operation of this proposed service in Texas, which must be maintained and protected in order to ensure that the safety record of the Tokaido Shinkansen can be effectively transferred.

1. Rolling Stock

The basis of the TCRR operation is the adoption of the Tokaido Shinkansen system with the N700 series trainset, and its variants, as the rolling stock, adapted for service in Texas. JRC's N700 series trainsets, have been in service since 2007 on the Tokaido Shinkansen line and operate up to speeds of 300 km/h on the adjacent Sanyo Shinkansen line. The N700 trainset is an electric multiple unit (EMU) trainset design based upon an accident avoidance

[2] In order to accurately replicate the JRC operation of the Tokaido Shinkansen, and to minimize rounding and other errors associated with converting units of measurement, the text of this proposed rule uses the International System of Units (*i.e.,* the metric system), rather than the standard units of measurement more commonly used in the U.S. rail environment, as these are the units of measurement used by JRC.

[3] TCRR's contemplated system will be smaller than JRC's Tokaido Shinkansen in almost every way, such as overall length of system, number of station stops, and anticipated frequency of daily trainset departures, to name a few aspects.

[4] Exhibit E to TCRR's rulemaking petition contains all the presentations that were discussed during the 25 meetings held between TCRR and FRA. All the meeting presentations are in the rulemaking docket, FRA–2019–0068.

[5] Additional meetings were held after the petition was submitted in April and August of 2019. Both were informational technical meetings. Copies of the presentations discussed at these meetings are included in the rulemaking docket, FRA–2019–0068.

philosophy to ensure safe, reliable, and efficient service. The current design has been continuously refined with these principals in mind, building on over 50 years of experience that JRC has developed, together with its rolling stock manufacturers, in the design, operation, and maintenance of integrated high-speed trainsets. This proposed rule maintains the service-proven safety and operational history of this trainset, while adapting it to the conditions unique to TCRR's operating environment.

At the time of TCRR's petition, FRA was developing its rule (now final) governing the next generation of interoperable high-speed trainsets, known as Tier III. *See* 83 FR 59182. A primary goal of this rule was to provide more performance-based safety standards to allow U.S. operations to benefit from the service-proven high-speed trainset designs operating throughout the world, in a manner that allows for continuous technological innovation. Because the Tier III rule considered designs and operational practices such as those used on the Tokiado Shinkansen in its development, TCRR was able to take advantage of a paradigm shift in FRA's regulatory approach to high-speed passenger rail as established by the November 2018 Passenger Equipment Safety Standards final rule. As such, the rolling stock requirements of this proposed rule, contained in proposed subpart D, focus largely on those elements that differ from the Tier III standards, either because a risk that exists on the general system has been eliminated or highly mitigated (*e.g.,* grade crossings), or because the strict adherence to a requirement might otherwise effect the safety proven aspect of the design (*e.g.,* suspension design). A brief explanation of substantive deviations or essential areas of note are articulated in further detail below.

Trainset Structure

As previously stated, the central philosophy behind the safety approach of the Tokiado Shinkansen is collision avoidance and accident prevention. By eliminating and mitigating common risks and hazards to high-speed rail operations through design and technology, the need to provide occupant protection to mitigate certain accident scenarios through carbody structural requirements can be greatly reduced. By prohibiting other types of equipment (*i.e.,* conventional passenger and freight equipment) from operating over the same track, eliminating at-grade crossings with motor vehicles (particularly commercial equipment), temporally separating maintenance-of-way operations, and providing enhanced train control and intrusion protection technology, a higher level of safety can be attained rather than just relying on occupant protection standards *after* an accident occurs. This allows for the trainset design to focus on reducing mass and aerodynamic inefficiencies, which not only provides improved economic and environmental performance, but also provides for additional safety through improved braking characteristics, better stability, and reduced wear on running gear and tracks.

Furthermore, since the general system requirements often drive the carbody design, FRA believes requiring them, without cause, would result in significant changes, negating the service-proven design of the N700 series trainset. This could potentially have a negative effect with respect to braking, trainset stability, and wear on the track structure and running gear.

FRA is not proposing TCRR comply with the more robust conventional U.S. crashworthiness and occupant protection requirements applicable to equipment operating over the general system, which are driven largely by train-to-train collisions and grade crossing conflicts, as these risks have been heavily mitigated through the design of the system (*i.e.,* prohibition of both comingling with heavy freight equipment and grade crossings). However, FRA does propose to retain the crashworthiness and occupant requirements established by JRC to address potential residual risks to the operation and to ensure the trainset can handle the expected operational loads experienced in the intended service environment. Specifically, FRA proposes that TCRR demonstrate that the trainsets used in Texas have the same occupied volume integrity as those used on the Tokaido Shinkansen, verified through quasi-static compression and dynamic collision scenario testing. Additionally, FRA is proposing that TCRR also verify the trainset's resistance to override, should a collision occur. Further, FRA is proposing that TCRR demonstrate its trainsets meet the same roof and side structure integrity requirements, and truck-to-carbody attachment strength requirements, as the N700 series trainset operated by JRC.

The proposed rule requires trainset interior fittings to be securely attached and designed to operate without failure under conditions and loads to be expected in TCRR's proposed operating environment. The rule does not adopt the conventional attachment loading, as doing so would jeopardize other safety critical designs of the service-proven N700 series trainset (*e.g.,* the suspension system). In addition, all interior surfaces should be free of corners and sharp edges that could pose a hazard to occupants under sudden deceleration or braking events.

The proposed rule will require cab end-facing glazing to comply with Tier III requirements: Large object impact test in accordance with EN15152 and the ballistic impact resistance requirements under appendix A of 49 CFR part 223. Side-facing glazing are proposed to meet FRA's current Type II requirements, unless an alternative standard is approved, which is also what Tier III equipment must comply with. FRA welcomes comments on whether international standards exist for side-facing glazing that may be better suited for very high-speed operations, particularly those operating in dedicated and protected ROW environments as the rule proposes.

FRA believes these baseline trainset carbody requirements, to include interior fittings and glazing, will ensure that the trainset remains stable and safe for the high-speed environment it is intended to operate in, while protecting against the very low residual potential derailment and foreign object collision risks.

Braking System Requirements

This rule proposes requirements for the brake system based upon FRA's November 2018 Passenger Equipment Safety Standards final rule, with modifications where appropriate for technology specific to the N700 series trainset. The brake commands are transmitted through the trainset-borne network system, as well as through the trainline for redundancy. Unlike typical North American brake systems, the N700 series trainset uses a loop circuit for the urgent brake control and does not have brake pipes. The brake system of a motorized car on a N700 series trainset has a blended brake system, consisting of an electronically controlled pneumatic brake and a regenerative brake. A non-motorized car on a N700 series trainset has an electronically controlled pneumatic brake. The brake system on the N700 series trainset also has a state-of-the-art wheel slide control system.

Consistent with proper railway engineering practice, the proposed rule would require the railroad to demonstrate the maximum safe operating speed for the trainsets without thermal damage to equipment or infrastructure during normal operation of the brake system. The brake system

must be capable of stopping the trainset from its maximum operating speed within the signal spacing on the track under the realistic worst-case adhesion conditions expected. As proposed, tests on trainsets to verify the brake system performs as expected will be conducted during the pre-revenue service qualification testing proposed under subpart F. Additionally, operational restrictions based on degraded braking system performance are to be addressed by the railroad under the proposed requirements for movement of defective equipment.

The N700 series trainset braking system utilizes an ''urgent'' brake as defined in the proposed § 299.5. An urgent brake is equivalent to the emergency brake in the U.S. in that it produces an irretrievable stop, with maximum braking effort. The N700 series trainset has an urgent brake switch for use by the trainset crew from the controlling cab and the conductor's room(s). The use of the urgent brake by the conductor is usually within stations to assure passenger safety when boarding and alighting from the trainset. The proposed rule requires that an urgent brake application be available at any time, and shall be initiated by an unintentional parting of the trainset or action by the trainset crew. Further, the station platform will be equipped with trainset protection switches on the station platform so that both station personnel and conductors can activate the urgent brake on the trainset in the event that they observe an unsafe condition during boarding/alighting of trainsets.

The proposed rule requires a means to initiate a passenger brake alarm at two locations in each unit of a trainset, consistent with the requirements developed for Tier III trainsets. The proposed rule does not incorporate the exception provision for length of individual cars as it is applicable to shorter designs than the N700 series trainset.

Additionally, the N700 series trainset braking system utilizes an ''emergency'' brake as defined in the proposed § 299.5. The emergency brake on the N700 series trainset is equivalent to the North American full-service brake.

Requirements for the main reservoir system are based on the requirements included in the November 2018 Tier III final rule, but modified to accommodate the specific design standards used for the N700 series trainset. The proposed rule requires the brake system main reservoirs in a trainset to be designed and tested to meet the pressure vessel standards in Japanese Industrial Standard JIS B 8265, ''Construction of pressure vessels-general principles.'' This is the same pressure vessel standard the N700 series trainsets comply with to operate in Japan. The JIS standard adequately ensures that the pressure vessel (the main reservoir) is suitable for the service conditions under which the brake system main reservoirs will operate, ensuring that the system replicates the service-proven brake system used currently on the N700, operated on the Tokaido Shinkansen. Requiring adherence to conventional U.S. standards would not be prudent, as this would jeopardize the service-proven aspect of the design.

Fire Safety

The proposed rule will require interior furnishings to be compliant with current FRA flammability and smoke emission requirements under appendix B to part 238 (see, generally, the discussion of FRA's flammability and smoke emission requirements at 64 FR 25660, 67 FR 42909, and 83 FR 59182). Many of the elements affected by fire safety standards are driven by business decisions made by the project (*e.g.,* carpeting, seating fabric, etc.) and are not inherent to the safe performance of the trainset as it related to its structure or stability at speed. Therefore, it was determined by the project that it would be appropriate to simply adopt and comply with the current U.S. standards in lieu of justifying new ones.

Door Systems

The proposed requirements for the trainset door systems, particularly as it relates to emergency functionality, largely follow FRA's existing requirements and established North American practice. The relevant requirements for operating; inspection, testing, and maintenance (ITM); and training on door systems have been consolidated under their respective subparts as proposed within this rule. The proposed modifications focus mainly on how the requirements apply to the Tokaido Shinkansen technology and the applicability of certain elements of APTA SS–M–18–10. The proposal would retain the service-proven door system on the N700 series trainset, and, though FRA is not proposing to require it, TCRR is expected to adopt the coordination between the trainset crew members and platform attendants, replicating operations by JRC, rather than incorporating certain requirements that were promulgated in December 2015 for conventional U.S. operations (*see* 80 FR 76118), which, if applied, would require alteration that could have a significant negative impact on the service-proven door design of the N700 series trainset.

Emergency Systems

The proposed rule defines typical North American requirements for emergency lighting, emergency communications, emergency egress and rescue access, and emergency marking requirements. A number of these provisions will require minor changes to the current N700 series trainset design, such as the emergency lighting system, public address system, and interior signage and markings. However, compliance with these proposed emergency systems requirements would not have a negative impact on the service-proven design of the N700 series trainset as they have no impact on the performance of the trainset or its integration with other safety-critical systems. These changes will also provide first-responders and the traveling public with a set of safety communications and features that are consistent with other U.S. rail operations.

Safety Appliances

Current FRA regulations for safety appliances are based on longstanding statutory requirements for individual railroad cars used in general service. These requirements are primarily intended to keep railroad employees safe while performing their essential job functions. Historically, these duties have revolved around the practice of building trains by switching individual cars or groups of cars, and are not directly applicable to how modern high-speed passenger equipment are designed and operated. The application of such appliances would require a significant redesign of high-speed rail equipment, and would create aerodynamic problems particularly with respect to associated noise emissions. FRA proposes to exempt TCRR from statutory requirements that are not applicable or practical for inclusion on its high-speed trainset technology, pursuant to the authority granted under 49 U.S.C. 20306.[6]

Rather than apply legacy requirements that are inappropriate for the proposed equipment design and service environment, this proposed rule focuses on how to provide a safe environment for crews as it pertains to the N700 series trainset, and modern high-speed operations throughout the world. In this respect, the proposed rule

[6] Utilization of this statutory authority necessitates a public hearing. As stated above, under **DATES**, the time and place of this public hearing will be announced by a separate announcement published in the **Federal Register**.

would define specific safety appliance performance requirements applicable to this semi-permanently coupled trainset. By focusing on the job functions, rather than mandating specific legacy designs for dissimilar equipment, the proposed approach will arguably improve safety for crews and railroad employees, but provide flexibility for superior designs based on modern ergonomics, and eliminate appliances that might otherwise encourage their use even though their functionality is moot (*e.g.,* riding on side sills despite an inability to couple/decouple cars). FRA believes it is appropriate to consider relief under the discretionary process established under 49 U.S.C. 20306 and proposes to adopt these requirements under its statutory authority as part of this rulemaking.

Image and Audio Recording Devices

On July 24, 2019, FRA published an NPRM regarding locomotive mounted image and audio recording devices for passenger trains. 84 FR 35712. In that NPRM, FRA proposed to require the installation of inward- and outward-facing image recording devices on all lead locomotives in passenger trains, and that these devices would record while a lead locomotive is in motion and retain the data in a crashworthy memory module. FRA also proposed to treat these recording devices as safety devices under existing FRA regulations to prohibit tampering with or disabling them.

Although the proposal for image and audio recording devices is not yet final, FRA anticipates that any final requirements for image and audio recording devices would also apply to TCRR. Currently, FRA proposes to place the image and audio recording device requirements under 49 CFR part 229. Under this proposed rule, it is stated that 49 CFR part 229 will not be applicable to the railroad's high-speed trainsets. However, FRA makes clear here that it proposes to make applicable the requirements for the image and audio recording devices to TCRR's high-speed trainsets, while leaving the remainder of part 229 inapplicable to the high-speed trainsets, and would anticipate that once the July 2019 NPRM becomes final, FRA would make appropriate conforming changes to the requirements outlined in this NPRM.

FRA acknowledges that this was not a requirement contained in TCRR's rulemaking petition, and that this is not a requirement for the Tokaido Shinkansen system as operated in Japan. However, FRA does not anticipate this requirement having a detrimental effect on the service-proven nature of the N700 series trainset design.

2. Automatic Train Control System

As an intercity passenger railroad, TCRR must comply with all applicable requirements under 49 U.S.C. 20157, including, but not limited to, the statutory requirement to fully implement an FRA-certified positive train control (PTC) system on its main lines over which intercity or commuter rail passenger transportation is regularly provided. The rule proposes to require TCRR to use the signal system based upon the service-proven Tokaido Shinkansen Automatic Train Control (ATC) system, which has demonstrated an outstanding safety record during its 55 years of operations. This system is a standalone digital ATC system, and as such, does not rely on an underlying conventional signaling system.

This proposed rule, under subpart B, outlines the requirements for signal and trainset control systems governing the operation of TCRR, based on the fundamental statutory requirements of 49 U.S.C. 20157 and 49 CFR part 236, subpart I, but is tailored for a standalone and service-proven trainset control system intended for high-speed passenger service. TCRR is proposing to implement a PTC-compliant trainset control system throughout its entire network, to include trainset maintenance facilities and depots (shop facilities), in addition to main line operation. While TCRR, in its petition for rulemaking, initially intended to comply with all elements under 49 CFR part 236, subpart I, FRA proposes to tailor the requirements to only those elements of subpart I that would apply to a standalone trainset control system intended for high-speed passenger service.

FRA notes that many of the requirements in 49 CFR part 236, subpart I were written to establish the process by which existing railroads would develop and implement PTC systems as overlays on conventional signaling systems. As TCRR is a new system, and will utilize service-proven technology that does not need to be integrated with a legacy signal system or be interoperable with other PTC systems, the requirements proposed in this rule have been streamlined to focus on the core requirements and documentation necessary to validate and certify a PTC system of its design and application. This proposal also acknowledges that if any changes are made to the service-proven, safety-critical software utilized on the Tokaido Shinkansen signaling system (such as changes to the fundamental architecture or safety critical functions), those changes must be developed and validated in accordance with the procedures proposed under subpart B. This rule balances the service-proven history of the Tokaido Shinkansen ATC system with the fundamental fail-safe principles encompassed in FRA's regulations governing advanced trainset control technology, to ensure TCRR's system is implemented and maintained safely, in a manner consistent with U.S. law, while holding true to the collision avoidance principles on which the Tokaido Shinkansen is based.

3. Track Safety Standards

All high-speed track safety standards are based on the principle that the interaction of the vehicles, and the track over which they operate, must be considered as a system. This systems approach ensures that the capabilities and limitations of both the rolling stock and the physical infrastructure (*i.e.,* track) are considered when developing safety metrics and provides for specific limits for vehicle response to track perturbation(s).

FRA's Track Safety Standards, under 49 CFR part 213, and its Passenger Equipment Safety Standards, under 49 CFR part 238, promote the safe interaction of rail vehicles with the track over which they operate. These safety standards were developed with industry stakeholder participation, and are applicable to all high-speed and high cant deficiency train operations in the United States. Last amended in March 2013 (78 FR 16052), subpart G of part 213, consolidated repetitive guidance found in part 238, and revised existing minimum safety limits for vehicle response to track perturbations and also added new limits. FRA's rules are not applicable to one vehicle type, but account for a range of vehicle types (like vehicles with variations in their physical properties, such as suspension, mass, interior arrangements, and dimensions that do not result in significant changes to their dynamic characteristics) that are currently used and may likely be used on future high-speed or high cant deficiency rail operations, or both. FRA's high speed/high cant deficiency regulations are based on the results of simulation studies designed to identify track geometry irregularities associated with unsafe wheel/rail forces and accelerations, thorough reviews of vehicle qualification and revenue service test data, and consideration of international practices.

Track Classes

FRA differentiates track classes by speed. Existing regulations contain requirements for track classes 1–5, for speeds not exceeding 90 mph, and track classes 6–9 for operations up to 220 mph. In the 2013 final rule, FRA stated that the Class 9 standards would remain as benchmark standards with the understanding that the final suitability of track safety standards for operations above 150 mph would be determined by FRA after examination of the entire operating system, including the subject equipment, track structure, and other system attributes. FRA explained that direct FRA approval is required for any such high-speed rail operation, whether through an RPA such as this or another regulatory proceeding.

The basis of the TCRR operation and this proposed rule, however, is adoption of the Tokaido Shinkansen system, using the series N700 series trainset, and its variants, as the only rolling stock for a fully dedicated, grade-separated, high-speed rail service between Dallas and Houston, TX. JRC's N700 series trainsets have been in service since 2007 and operate at the speed of 285 km/h on the Tokaido Shinkansen and 300 km/h on the Sanyo Shinkansen. As stated previously, the N700 series trainset is a service-proven EMU trainset design that has been continuously refined, and highly optimized by JRC for over 50 years.

JRC's track safety standards have evolved concurrently with these N700 Shinkansen EMU trainsets, allowing for a high degree of optimization of the trainset interacting with the track structure. TCRR plans to replicate the Tokaido Shinkansen system to bring the same safety and performance of the Shinkansen system to this Dallas-Houston operation. This rule proposes to adopt the same JRC-derived track safety standards to ensure that this optimized vehicle-track interaction is achieved between Dallas and Houston in its entirety. Therefore, this proposal would require the railroad to follow the JRC approach for the definition of track classes, track geometry limits, carbody acceleration criteria, and track inspection intervals for both automated and visual inspection on all TCRR track Classes at all speeds up to and including the maximum track speed of 330 km/h.

JRC defines track and the speed range by function (*i.e.,* main track, etc.), and not by a track class designation. However, in this proposed rule, the JRC practice has been translated into eight classes of track from track Classes H0 to H7. As stated, the maximum authorized speed from track class is based on current JRC practice with the addition of track Class H7, which covers operating speeds up to 305 km/h. It is notable that in this proposal, track Class H0 will be dedicated to maintenance-of-way equipment, with a maximum allowable operating speed of 20 km/h (12 mph), which is consistent with JRC practice. As is done in Japan, this proposal would prohibit high-speed trainsets from operating on the proposed track Class H0. Below is a table outlining the proposed classes of track, the associated maximum operating speed for that class, and where that class of track is proposed to be used within the system. The table is not meant to dictate that these are the only locations for the various classes of track to be located within the TCRR system, but meant to represent FRA's general understanding of how TCRR will use the various track classes.

TRACK CLASSES—MAXIMUM SPEED

	H0	H1	H2	H3	H4	H5	H6	H7
km/h	20	30	70	120	170	230	285	330
mph	12	19	43	75	106	143	177	205
Track type								
	Maintenance-of-way yards	Trainset Maintenance Facilities (TMF).	Terminals, stations, sidings, TMF marshaling tracks.	Main line track, and track connecting the main line with TMF.	Main line track.			

Track Geometry

The proposed track safety standards for TCRR are under subpart C of this proposed rule. Within that proposed subpart, FRA has included certain track geometry requirements for the TCRR system. The geometry limits proposed by FRA are based on JRC practice. Likewise, FRA proposes to adopt the JRC practice for remedial action for instances when optimal track geometry limits and car body accelerations are exceeded, and trainset operations would require speed and/or operational restrictions, with speed restrictions enforced by the ATC system.

The highly effective JRC track measurement system is based on monitoring track geometry and vehicle performance, and represents a hybrid approach consisting of physical measurements directly on the track, in combination with performance-based track geometry as defined by vehicle response. TCRR will adopt this approach which is based on a 10 m mid chord offset (MCO) measurement to effectively control short wavelength track geometry irregularities and the measurement of car body accelerations to control long wavelength anomalies.

TCRR is adapting and implementing the same track geometry limits and car body accelerations utilized by JRC to ensure the continued success of this vehicle-track system and the optimized performance of the N700 series trainset. The JRC approach is very different from FRA, and is based on measuring track gauge, cross-level, and twist over 2.5 m, and alignment/surface on a 10 m MCO, with long wavelength defects controlled by monitoring car body acceleration. The JRC track measurement system adequately controls track geometry for short and longer wavelengths (20 and 40 m) such that wheel/rail forces are well within acceptable limits. TCRR is using JCR's geometry limits for the 10 m MCO and car body acceleration limits, both of which will be enforced by FRA, thereby ensuring the trainset's track/vehicle system meets FRA's safety criteria (wheel/rail forces) for track maintained to those geometry and acceleration limits.

Inspection, Testing, and Maintenance for Track

Inspection, testing, and maintenance requirements for the track and right-of-way are found generally in the proposed regulatory text, and in greater detail within the FRA-approved ITM program. The proposed track maintenance requirements are based on JRC practice, which is grounded in significant testing and many years of proven JRC operation. The JRC approach for the high-speed track layout and structure is optimized for the safe and efficient operation of the N700s trainset utilized.

As mentioned throughout this NPRM, TCRR will implement a track maintenance program based on these successful and well respected JRC practices.

JRC uses a dedicated, multi-purpose, vehicle-based, inspection system to inspect track geometry. Track geometry measurements and car body accelerations are made during revenue operations at revenue operating speeds. This proposal reflects U.S. and JRC practice with respect to track geometry measurements. FRA proposes to require a track geometry measurement system (TGMS) and a track acceleration measurement system (TAMS) to be operated over the system route on track Classes H3 and above.

Regarding restoration or renewal of track under operating conditions, this proposed rule will prohibit the railroad from performing maintenance-of-way operations during revenue service, other than in MOW yards and trainset maintenance facilities, as further discussed below. Restoration or renewal of track by TCRR on track Class H2 in trainset maintenance facilities, will be limited to the replacement of worn, broken, or missing components or fastenings that do not affect the safe passage of trainsets. This will reflect the JRC practice and is more restrictive than existing FRA track safety standards as it permits such restoration and renewal under traffic conditions only in yards and trainset maintenance facilities and not the mainline.

Vehicle/Track Interaction

The approach to vehicle/track interaction (VTI) system safety in this rule proposes to follow JRC's approach that is service-proven to provide safe operation and optimum VTI performance. JRC places considerable emphasis on maintaining track infrastructure, as the Tokaido Shinkansen N700 series trainset suspension design is optimized for high-speed performance on well-maintained track. Track geometry irregularities are held to tighter tolerances than those allowed under U.S. practice.

The VTI requirements FRA proposes are similar to those contained in current FRA regulations under 49 CFR part 213, and will require the trainsets to comply with the same wheel/rail force limits. However, as noted earlier, JCR requires more stringent peak-to-peak car body acceleration limits than currently permitted under FRA regulations. Accordingly, FRA proposes that instrumented wheelset tests be required for vehicle/track system qualification.

Unique to the Tokaido Shinkansen system, and as mentioned earlier, JRC sets track geometry limits based on a 10 m MCO and controls long wavelength perturbations using stringent vertical and lateral car body accelerations, rather than the 3-chord (31, 62, and 124 ft) method used in current FRA regulations. Vehicle dynamic simulations have been conducted and validated by JRC specialists to demonstrate the 10m MCO and car body accelerations, as used by JRC, are sufficient to safely control short, long wavelength, and repeated perturbations; and to validate the proposed track geometry limits contained in the proposed rule.[7]

Continuous Welded Rail

TCRR is proposing to use continuously welded rail (CWR) and moveable point frogs to eliminate gaps at turnouts and crossings. Consistent with current FRA practice for CWR, FRA proposes to require the railroad develop and comply with its own CWR plan, which will have procedures addressing the installation, adjustment, maintenance, and inspection of CWR and CWR joints. However, as the FRA CWR requirements under 49 CFR part 213 are inconsistent with JRC technology and practices, FRA proposes a set of CWR requirements that reflects JRC's service-proven practice. Under this rule as proposed, TCRR will be required submit a CWR plan that includes procedures for maintaining a desired rail installation temperature range when cutting CWR, and with adjustments made to tight track or a track buckle.

In addition to the proposed requirements discussed above, FRA is also proposing to require TCRR's CWR plan to contain procedures that control trainset speed on CWR track when the difference between the rail temperature and the rail neutral temperature is in a range that causes buckling-prone conditions to be present at a specific location. This proposed requirement is consistent with JRC practice, which uses ''instantaneous'' temperature, a more stringent requirement, instead of ''average'' temperature. When the temperature exceeds a specified limit, operational restrictions are enforced over the entire segment. JRC uses the same temperature limits on all segments.

FRA is also proposing that the railroad's CWR plan include procedures that address track inspections under extreme temperature conditions, consistent with JRC practice. As stated previously, there is continuous monitoring of rail temperature on the Tokaido Shinkansen system and a speed restriction of 70 km/h is enforced when CWR temperature is between 60 °C and 64 °C. JRC suspends revenue operations and conducts visual inspections on foot when the CWR temperatures reach 64 °C or above.

4. Maintenance-of-Way Operations

Strict adherence to complete temporal separation of the scheduled right-of-way maintenance work will be required by the proposed rule. This rule proposes to adopt JRC's long-established maintenance-of-way operational practices to ensure roadway worker safety. To accomplish this, the rule proposes requirements for strict adherence to temporal separation of maintenance-of-way operations and revenue trainsets, as well as removal of overhead power from the section(s) of ROW where maintenance-of-way work is being performed. Additionally, this rule proposes prohibiting the railroad from conducting any scheduled maintenance on a section of the right-of-way prior to that section of the right-of-way being cleared after revenue service. Further, the railroad will also be prohibited from conducting revenue service on a section of the right-of-way before completion of the maintenance activities and clearance by a sweeper vehicle. As proposed by this rule, the ATC system must also enforce the temporal separation or otherwise protect maintenance-of-way employees performing on-track duties (to include unscheduled and emergency inspections or repairs).

TCRR will use maintenance-of-way equipment that is designed to be compatible with the track safety standards under proposed subpart C. Subject to certain exceptions, as proposed under § 299.3(c)(24), the railroad's maintenance-of-way equipment will be subject to FRA's existing regulations that address the safety of conventional locomotive and freight equipment (*i.e.,* 49 CFR parts 215, 223, 229, 231, and 232). Although there is a general prohibition that freight equipment cannot operate on the railroad's right-of-way, the freight equipment being considered here is

[7] Exhibit F to TCRR's rulemaking petition explains how JRC helped develop and validated the track geometry limits proposed in this NPRM, and provides some explanation of the vehicle dynamic simulations conducted. Although the Tokaido Shinkansen operates at a maximum speed of 270 km/h, the vehicle dynamic tests used to validate the track geometry limits proposed in this NPRM were conducted at simulated speeds up to 340 km/h (330 km/h + 10 km/h). FRA notes, though, that the maximum safe operating speed for the system will be determined only after TCRR conducts full scale analysis and validated dynamic testing, as proposed under subpart F.

strictly for non-revenue, right-of-way maintenance operations.

The railroad's proposed maintenance-of-way fleet will include a sweeper vehicle. As part of this rule, FRA is also proposing that sweeper vehicles run on both tracks along the full length of the railroad right-of-way every day prior to the start of revenue service, in order to ensure that there are no obstacles on the tracks within the lower construction clearance envelope, consistent with the practice of JRC. The sweeper vehicle is designed to detect the presence of any small obstacles, such as tools left out from a roadway worker gang. Additionally, the qualified individuals operating the sweeper vehicle will be required to be trained to conduct visual inspections of both tracks to ensure the integrity of the right-of-way, including the condition of fencing and other railroad infrastructure. Strict adherence to this temporal separation, protection of maintenance-of-way work by use of the ATC system, and the daily requirement for sweeper vehicle use will help ensure that there are no maintenance-of-way equipment, no heavy maintenance tools, and no obstruction hazards on the tracks when the revenue service starts every day.

5. System Qualification

Responsibility for Verification Demonstrations and Tests

Under proposed subpart F, FRA proposes a set of pre-revenue qualification testing requirements that the railroad must complete before commencing passenger service. Successful completion of the proposed testing program will provide the railroad assurance that the system, as designed, constructed, and integrated, will meet the minimum safety requirements established, so that the risk to passengers is minimized when operations begin. This proposed subpart F is organized such that the approach to system qualification generally requires the preparation of a system-wide qualification test plan, pre-operational qualification testing of individual components and sub-systems, and then pre-revenue service testing that verifies the compatibility of the various sub-systems. Finally, a period of simulated revenue operations is proposed that would replicate revenue operations without passengers. This would provide final verification that the systems operate as intended, all safety-critical personnel are adequately trained, and operating rules or practices and the inspection, testing, and maintenance program are appropriate.

Preparation of System-Wide Qualification Test Plan

As proposed, prior to execution of any system qualification tests, the railroad will develop a system-wide qualification test plan that identifies the tests necessary to demonstrate the operability of all system elements, including: Track and infrastructure, signal, communications, rolling stock, software, operating practices, and the system as a whole. The system-wide qualification plan will include procedures for functional and performance qualification testing, pre-revenue service systems integration testing, vehicle/track system qualification, and simulated revenue operations, all discussed further below.

The proposed provisions include FRA's review timeframe (180 days prior to testing) and expected FRA response time (45 days after receipt of the submission) and actions. FRA will identify in the notification any test procedures requiring approval by FRA. The system-wide qualification test plan is generally consistent with current FRA practice under 49 CFR part 238 for passenger equipment, but addresses the system holistically. Under this proposal, TCRR will be required to develop a list of all tests to be conducted to qualify all aspects of the system including rolling stock, track, vehicle-track interaction, and signaling. FRA makes clear that, as proposed, FRA's approval of the system-wide test plan will be limited to approving that the test plan addresses all required tests, providing procedures for such tests; however, FRA is not approving the specific procedures adopted by the railroad to conduct each required test.

Functional and Performance Qualification Tests

Also proposed in this NPRM is a requirement that the railroad will conduct functional and performance qualification tests, prior to commencing revenue operations, to verify that all safety-critical components meet all functional and all performance specifications. The railroad will be required to submit a list of all tests to be conducted, along with the test procedures, as part of its system-wide qualification test plan, as discussed above.

Pre-Revenue Service Systems Integration Testing

The pre-revenue service testing of systems proposed in this NPRM will be used to verify the compatibility of the various sub-systems. The pre-revenue service testing will include such things as: Vehicle clearances to structures along the right-of-way; mechanical performance of the overhead catenary system; and the integrated performance of the track, signal, power supply, vehicle, software, and communications. Also, the railroad will be required to demonstrate safe system performance during normal and degraded operating conditions. These tests will be used to verify: Catenary and pantograph interaction; incremental increases in trainset speed; braking rates; and vehicle-track interaction.

Vehicle/Track System Qualification

As discussed above, under the proposed track safety standards, the approach to VTI system safety in this rule proposes to follow JRC's approach that is service-proven to provide safe operation and optimum VTI performance. As part of the system wide test plan, FRA proposes to require the railroad to qualify its high-speed trainset for the maximum operating speed and cant deficiency contemplated. The format proposed largely follows current FRA practice, with the qualification criteria based on JRC requirements for the N700 series trainset currently operating on the Tokaido Shinkansen system.

Simulated Revenue Operations

FRA is also adopting TCRR's proposal that the railroad conduct a period of simulated revenue operations, replicating most, if not all, aspects of revenue operations, but without passengers. This will provide the final verification that the system, and all sub-systems, operate as intended, together with all properly trained, safety-critical personnel. Further, the proposed simulated revenue operations will give valuable operational experience to the railroad and its employees prior to carrying passengers.

The proposed provision will assure that all issues found during simulated revenue operations are properly addressed and corrected prior to the start of revenue service. It is not anticipated that issues found during simulated revenue operations would extend the period for testing if the specific deficiencies found were adequately rectified during that period; however, FRA would expect the start of revenue operations to be postponed, if necessary, to properly and thoroughly correct any such deficiencies.

Verification of Compliance

Under this proposed subpart F, FRA proposes to require the railroad to prepare a report detailing the results of all functional and performance

qualification testing, pre-revenue service systems integration testing, and vehicle/track system qualification tests. The report will also require the railroad to outline the remedial measures necessary to correct any deficiencies discovered during the testing. In addition, FRA also proposes that the railroad be required to implement the improvement measures discussed in the report. With the exception of reports related to vehicle/track system qualification, verification of braking rates, and field testing data related to the ATC system, FRA proposes that the railroad submit the report prior to commencement of simulated revenue operations. For the reports regarding vehicle/track system qualification and verification of braking rates, FRA proposes they be submitted for review and approval at least 60 days prior to the start of revenue service. Certification of the railroad's PTC system must also be achieved prior to the start of revenue service.

FRA also proposes to require the railroad to obtain FRA approval of the test procedures used for the verification of any major upgrades to safety-critical system component(s) or sub-systems, or prior to introducing new safety-critical technology.

6. Inspection, Testing, and Maintenance

General Requirements

This NPRM proposes general requirements for inspection, testing, and maintenance under subpart G. The program will provide detailed information, consistent with the requirements set forth in §§ 299.337 through 299.349, 299.447(a), and 299.207. The conceptual basis for the proposed requirements under subpart G stems from FRA's practice regarding the inspection, testing, and maintenance of high-speed trainsets, originally set forth in subpart F of 49 CFR part 238. The underlying premise for this proposed approach is to tailor the performance-based requirements of the ITM program to the specific needs of the equipment or infrastructure, rather than specifying static maintenance intervals with explicit requirements. This approach has proven successful since it was first adopted for Tier II high-speed equipment, and therefore, FRA proposes to expand the practice for other critical areas requiring a similar performance-based approach to ITM. The general requirements within proposed subpart G specify that the railroad will develop an inspection, testing, and maintenance program to address all aspects of the operation—track, rolling stock, and signal and trainset control.

The NPRM proposes that submittal of the initial inspection, testing, and maintenance requirements associated with the bogie inspection and general overhaul can be at a later date. However, the proposal requires that the railroad submit the requirements to FRA no later than 180 days prior to the first scheduled bogie inspection or general overhaul, so that FRA has time to review and approve the associated inspection, testing, and maintenance requirements.

FRA proposes the initial inspection intervals for safety-critical items, including those covered in the bogie inspection and general overhaul, are covered by §§ 299.13(c)(1) and 299.907(a), to be based upon JRC's service inspection, testing, and maintenance practice to ensure the integrity and safe operation of the entire system, as required in § 299.13(c)(2). Additionally, the inspection, testing, and maintenance program for safety-critical items is subject to FRA approval under § 299.913.

ITM Program Format

As discussed above, FRA proposes to limit the scope of its approval to only those items deemed safety-critical to the operation of the system. However, FRA does propose to require the railroad submit the entire ITM program for review to make sure all safety-critical items have been properly identified and accounted for by the railroad. Accordingly, FRA proposes that the procedures for safely performing the necessary inspections, testing, and maintenance or repairs submitted to FRA for approval should only be those designated as safety-critical or potentially hazardous tasks as required by § 299.911(b).

Additionally, FRA proposes that the railroad review the inspection, testing, and maintenance procedures annually to enable the railroad to review any pertinent operational changes or conditions that may result in modifications to the safety-critical aspects of the inspection, testing, and maintenance program. Under this proposal, FRA can participate in the annual review. The annual review would be conducted to identify necessary modifications to procedures or intervals. While FRA may determine it is not necessary to participate in the annual review in a particular year, any amendment to the safety-critical portions of the ITM will need FRA approval prior to implementation.

7. Operating Rules and Practices

Under proposed subpart E, this NPRM proposes that the railroad develop, maintain, adopt, and comply with a code of operating rules, timetables, and timetable special instructions, along with procedures for instruction and testing of all employees involved with the movement of rail vehicles prior to commencing revenue operations.

FRA also proposes to require that the railroad's initial code of operating rules, timetable, and timetable special instructions be based on the service-proven practices and procedures used by JRC on the Tokaido Shinkansen system. FRA acknowledges that as the project matures, changes to the code of operating rules, timetable, and timetable special instructions that deviate from JRC practice may become necessary due to the uniqueness of the individual operation. However, FRA still expects that whatever changes are made to the code of operating rules, timetable, and timetable special instructions, they will remain consistent with JRC practice, and provide the same level of safety and performance.

It is important to note that, unlike what was included in the railroad's rulemaking petition, FRA does not propose to expressly approve the railroad's code of operating rules, timetable, and timetable special instructions. Rather, FRA proposes to remain consistent with current U.S. practice, with respect to the approval. FRA does, however, propose to retain the ability to disapprove the code of operating rules, timetable, and timetable special instructions in whole or in part, for cause stated, and at any time.

8. Personnel Qualification

This proposal follows FRA's current practice of requiring employees who perform safety related duties to be qualified to perform those duties under a training program developed by the railroad. The railroad will be responsible for developing the curriculum for the program and ensuring that specific training requirements outlined in relevant sections of this NPRM, or applicable FRA regulations of general applicability, are properly included. Based on the railroad's rulemaking petition, the qualification training program will be modeled on JRC's training program in Japan.

Although a separate subpart addressing personnel qualifications was proposed in TCRR's petition for rulemaking, FRA has decided that proposing a separate subpart is unnecessary. The proposed subpart, as drafted by TCRR, required compliance with 49 CFR part 243 and contained additional, specific training requirements for track inspectors. As 49

CFR part 243 is proposed as applicable to the railroad under § 299.3(c), there is no need for a separate subpart to so state. Additionally, since the additional training requirements were specific to track inspectors, FRA has moved those provisions under proposed subpart C, which addresses track safety, thus fully obviating the need for the subpart.

D. Applicability of FRA's Current Regulations

The proposed rule holds the railroad ultimately responsible for compliance with all aspects of the proposal, along with certain existing FRA regulations. In its petition, TCRR proposed to comply with the pertinent existing FRA regulations contained generally in 49 CFR parts 200–299, as listed in § 299.3(c), that are speed and technology neutral. After further review of those rules, there are certain additional provisions that are not appropriate for this system. Those individual sections are specifically excluded under § 299.3(c).

FRA also notes that there are many sectional cross-references within applicable FRA regulations to other FRA regulations that are not applicable to this project, such as 49 CFR parts 213, 217, subpart I of 236, and 238. Without specifically addressing each instance, FRA makes clear that where such a cross-reference exists in the applicable regulations enumerated under § 299.3(c)(1) through (23), the railroad will instead comply with the equivalent requirements proposed in this NPRM. For example, where there is a cross-reference to a section under 49 CFR part 213, which deals with track safety standards, or 49 CFR part 217, which deals with railroad operating rules and practices, the railroad would instead refer to, and comply with, subpart C for the applicable track safety requirements, or subpart E for the applicable requirements addressing operating rules and practices.

E. Incorporation by Reference

FRA proposes to incorporate by reference six Japanese Industrial Standards (JIS) and three ASTM International (ASTM) standards. As required by 1 CFR 51.5, FRA has summarized the standards it proposes to incorporate by reference and has shown the reasonable availability of those standards here. The Japanese Industrial Standards are reasonably available to all interested parties online at *www.jsa.or.jp* (Japanese site), or *www.jsa.or.jp/en* (English site). Additionally, the ASTM standards are reasonably available to all interested parties online at *www.astm.org.* Further, FRA will maintain a copy of these standards available for review at the Federal Railroad Administration, Docket Clerk, 1200 New Jersey Avenue SE, Washington, DC 20590.

Under § 299.13(d)(4) and (5), FRA proposes to incorporate by reference three versions of JIS E 1101, ''Flat bottom railway rails and special rails for switches and crossings of non-treated steel.'' JIS E 1101:2001 addresses the manufacturing of the steel rail. It specifies the quality and the tests for flat bottom railway rails of non-treated steel with a calculated mass of 30 kg/m or more and special rails for those railway switches and crossings. JIS E 1101:2006 and JIS E 1101:2012 amend JIS E 1101:2001 by updating references to other cited standards (*e.g.,* updating the title to the cited reference), updating references to specific clauses within a cited standard, or by deleting a reference to a cited standard. By incorporating these standards by reference, FRA will make certain that the rail side of the wheel-rail interface remains identical to that used on the service proven high-speed lines of JRC, by ensuring that the rail is manufactured to the same specifications as the rail used on the Tokaido Shinkansen system.

Under § 299.403(b), FRA proposes to incorporate by reference two versions of JIS E 7105 ''Rolling Stock—Test methods of static load for body structures.'' JIS E 7105:2006 addresses test methods for trainset carbodies. It specifies the test methods of static load for confirming strength, rigidity and the like of body structures for passenger stock such as electric railcars, internal-combustion railcars and passenger cars principally. JIS E 7105:2011 amends JIS E 7105:20006 by updating references to other cited standards (*e.g.,* updating the title to the cited reference), updating references to specific clauses within a cited standard, or by updating specifications from the 2006 version. By incorporating these standards by reference, FRA will maintain the same strength and rigidity of TCRR's trainset carbody structure. This will help preserve the occupied volume from premature degradation due to typical in-service loads and vibration.

Under § 299.409(g), FRA proposes to incorporate by reference JIS B 8265 ''Construction of pressure vessels-general principles,'' published December 27, 2010. JIS B 8265 addresses manufacturing of pressure vessels and specifies certain requirements for the construction and fixtures of pressure vessels with the design pressure of less than 30 MPa. By incorporating this standard by reference, FRA will ensure that the pressurized air reservoirs used in TCRR's trainset are designed and constructed to the same service-proven standard as used in the N700 trainsets currently operated on the Tokaido Shinkansen system.

Under § 299.423(e)(1), FRA proposes to incorporate by reference ASTM D 4956–07 $^{\varepsilon 1}$ ''Standard Specification for Retroreflective Sheeting for Traffic Control,'' approved March 15, 2007. ASTM D 4956–07 $^{\varepsilon 1}$ covers flexible, non-exposed glass bead lens and microprismatic, retroreflective sheeting designed for use on traffic control signs, delineators, barricades, and other devices.

Under § 299.423(e)(1) and (f)(3), FRA proposes to incorporate by reference ASTM E 810–03 ''Standard Test Method for Coefficient of Retroreflection of Retroreflective Sheeting Utilizing the Coplanar Geometry,'' approved February 10, 2003. Test method ASTM E 810–03 describes an instrument measurement of the retroreflective performance of retroreflective sheeting.

Under § 299.423(e)(2), FRA proposes to incorporate by reference ASTM E 2073–07 ''Standard Test Method for Photopic Luminance of Photoluminescent (Phosphorescent) Markings,'' approved July 1, 2007. FRA is also proposing to incorporate by reference Section 5.2 of ASTM E 2073–07 under § 299.423(e)(2)(ii). Test method ASTM E 2073–07 covers a procedure for determining the photopic luminance of photoluminescent (phosphorescent) markings. It does not cover scotopic or mesopic measurements.

Incorporation of the three ASTM standards by reference is to ensure that the materials used for interior and exterior emergency markings can provide adequate photoluminescence or retroreflectivity. As the markings utilizing these materials will be relied on during emergencies (either for passenger to egress or first responders to gain access), it is important that the marking can be easily identified and followed should the emergency occur during hours of limited visibility with possible degradation or complete loss of interior lighting. The standards either provide performance specifications for design and manufacture, or provide the testing methods.

F. Enforcement

FRA may impose civil penalties on any person, including the railroad or an independent contractor providing goods or services to the railroad, that violates any requirement of this rule. These penalty provisions parallel the civil penalty provisions for numerous other

railroad safety regulations, and are authorized by 49 U.S.C. 21301, 21302, 21303, and 21304. Any person who violates a requirement of this rule may be subject to civil penalties between the minimum and maximum amounts authorized by statute and adjusted for inflation per violation.[8] Individuals may be subject to penalties for willful violations only. Where a pattern of repeated violations, or a grossly negligent violation creates an imminent hazard of death or injury, or causes death or injury, an aggravated maximum penalty may be assessed.[9] In addition, each day a violation continues constitutes a separate offense. Finally, a person may be subject to criminal penalties under 49 U.S.C. 21311 for knowingly and willfully falsifying reports required by these regulations. FRA believes that inclusion of the penalty provisions is important in ensuring that compliance is achieved. *See* 49 CFR part 209, appendix A for a detailed statement of the Agency's enforcement policy.

Consistent with FRA's final rule regarding the removal of civil penalty schedules from the CFR, please *see* 84 FR 23730 (May 23, 2019), FRA will not publish a civil penalty schedule for this rule in the CFR, but plans to publish a civil penalty schedule on its website. Because such penalty schedules are statements of agency policy, notice and comment are not required prior to their issuance, nor are they required to be published in the CFR. *See* 5 U.S.C. 553(b)(3)(A). Nevertheless, commenters are invited to submit suggestions to FRA describing the types of actions or omissions under each regulatory section that would subject a person to the assessment of a civil penalty. Commenters are also invited to recommend what penalty amounts may be appropriate, based upon the relative seriousness of each type of violation.

V. Regulatory Impact and Notices

A. Executive Orders 12866, 13771, and DOT Regulatory Policies and Procedures

The TCRR high-speed system is modeled on the Tokaido Shinkansen high-speed system, which does not meet many of the current requirements under the Passenger Equipment Safety Standards final rule, published November 21, 2018 (83 FR 59182). TCRR desires to maintain the safety record of the Tokaido Shinkansen high-speed system, so it is imperative that the system approach to safety and philosophy of the JRC system be implemented as it is in Japan. As such, TCRR is requesting, through the proposed RPA, that they comply with regulations that are more stringent than the current Tier III standards.

FRA has a regulatory program that addresses equipment, track, operating practices, and human factors in the existing, conventional railroad environment. However, significant operational and equipment differences exist between the system proposed by TCR and existing passenger operations in the United States. In many of the railroad safety disciplines, FRA's existing regulations do not address the operational characteristics of the proposed TCRR system. Therefore, to ensure that this new system will operate safely, minimum Federal safety standards must be in place when TCRR commences operations.

FRA is proposing to regulate the TCRR system as a standalone system. FRA stated in the Tier III final rule that a standalone system would have to combine all aspects of railroad safety (such as operating practices, signal and train control, and track) that must be applied to the individual system. Such an approach covers more than passenger equipment and would likely necessitate particular right-of-way intrusion protection and other safety requirements not adequately addressed in FRA's regulations. FRA continues to believe that addressing proposals for standalone high-speed rail systems on a case-by-case basis and comprehensively (such as through an RPA or other specific regulatory action(s)), is prudent because of the small number of potential operations and the possibility of significant differences in their designs.

Without the proposed RPA, TCRR would not be allowed to implement their proposed system as it does not meet the requirements outlined under the Tier III rule. The proposed regulation, as a rule of particular applicability, was not subject to review under Executive Order (E.O.) 12866.

FRA concluded that because the NPRM generally includes only voluntary actions or alternative action that would be voluntary, the NPRM does not impart additional burdens on regulated entities. This proposed rule is expected to be an E.O. 13771 deregulatory action. Details on the estimate cost savings of this proposed rule can be found below.

1. Costs

Since TCRR, in its rulemaking petition, requests regulatory requirements that may exceed those currently imposed upon other railroads, there are no assumed new costs associated with the NPRM, as any additional burdens placed onto TCRR are voluntarily assumed. TCRR is assuming this burden to ensure that the Tokaido Shinkansen system can be fully implemented, as it is currently used by JRC. Both TCRR and FRA believe that a complete system approach to safety is needed to maintain the over 50-year exemplary safety record that the Tokaido Shinkansen system has experienced in Japan. As such, TCRR is willing to assume the additional burden by voluntarily requesting regulatory requirements that exceed what is currently imposed on other railroads.

2. Benefits

TCRR will replicate the Tokaido Shinkansen system, adapting the system and its essential technologies to the geographic and environmental conditions in Texas. The TCRR system is based on accident avoidance principles to assure collisions and other operational risks and hazards are eliminated or reduced to the highest possible degree. The system includes a dedicated, grade-separated, and fully fenced right-of-way with intrusion detection capabilities. It will be designed only for high-speed trainsets of a specific type on the right-of-way during revenue operations, and implements a strict temporal separation of maintenance activities (*i.e.,* maintenance will be done at night when there are no passenger train operations).

The safety features of the TCRR system will be unique in this country and do not exist in combination on any other existing North American railroad. The proposed rule will require the TCRR system to implement all service-proven, safety-critical aspects of JRC's Tokaido Shinkansen system. Additionally, the proposed rule incorporates the structural characteristics of JRC's N700 series trainset in a manner that can be regulated and enforced by FRA. The NPRM also requires the system to be designed, operated, and maintained in a manner that effectively mitigates any hazard that could compromise the integrity of the trainset. Implementing the Tokaido Shinkansen N700 series trainsets as they are currently designed, along with the accident mitigation measures required by a systems approach, and defined in the proposed rule, will allow TCRR to replicate the

[8] DOT publishes notices in the **Federal Register** announcing when it adjusts the minimum and maximum civil penalties. When adjustments are made, FRA publishes such adjustments on its website. Please visit FRA's website for the current minimum and maximum civil penalty amounts at *https://railroads.dot.gov/.*

[9] Please visit FRA's website for the current aggravated maximum penalty amount at *https://railroads.dot.gov/.*

service-proven system and operations of the Tokaido Shinkansen system.

The replication of the Tokaido Shinkansen high-speed system by TCRR will allow TCRR to achieve a degree of safety that is at least as great or greater than would be achieved while complying with existing FRA safety standards and regulations.

This proposed rule would facilitate the creation of a new high-speed passenger railroad operating between Dallas and Houston, Texas, utilizing the existing Tokaido Shinkansen technology that is currently in service in Japan. Without the proposed rulemaking, TCRR would incur potentially significant costs (and potentially lower system performance) to comply with existing FRA regulations, or would need to seek waivers of those regulations that would not provide long term regulatory certainty. In either event, such costs and uncertainty could potentially leave the project financially infeasible. If that were the case, potential users of the new high-speed rail service between Dallas and Houston would lose the consumer surplus gains that they would otherwise enjoy, and any external societal benefits associated with modal shift for passenger travel between the two cities would be lost as well.[10]

As the Tokaido Shinkansen high-speed system is a service-proven system, FRA believes that the proposed rulemaking is the best course of action to ensure that the public is provided with the highest level of safety, while still providing regulatory clarity to TCRR.

3. Alternatives

FRA provides two alternatives to the proposed RPA: The ''No Action'' alternative where, without the proposed rule, TCRR could decide to not pursue the Tokaido Shinkansen high-speed system and instead pursue a system that could be built using the current Tier III standards, or where TCRR could elect to comply with FRA's existing regulations where the TCRR equipment and procedures may conflict, necessitating a comprehensive set of waivers from existing FRA standards.

''No Build'' Alternative

Under one of the potential baseline alternatives, the ''No Build'' alternative, without the proposed RPA TCRR could decide not to pursue the construction of its Tokaido Shinkansen high-speed system and instead could pursue to build a high-speed system that complies with the current Tier III standards.

JRC would most likely not allow TCRR to use the Tokaido Shinkansen high-speed system if it was modified it to adhere to the current Tier III standards. In this event, TCRR would need to design and develop a brand new high-speed system. In addition to the high costs of designing and developing a new high-speed system, there would be high levels of uncertainty associated with the overall safety performance of the system, especially when compared to the Tokaido Shinkansen high-speed system. Any new system that TCRR creates would lack the proven safety record of the Tokaido Shinkansen high-speed system. FRA believes it is unlikely that TRR would build this system under this alternative.

Waivers of Compliance

As an alternative to redesigning the Tokaido Shinkansen system to comply with FRA's existing regulations, TCRR could apply for waivers of compliance. The continual renewal of waivers would impose a large paperwork burden on TCRR as it would need a waiver for a large portion of its operations, since the proposed system differs greatly from the Tier III standards.[11] Furthermore, waivers are revocable, and provide approval that can be subject to change and conditions.[12]

This uncertainty of the longevity of waiver approval could hinder the financing and implementation of the TCRR system. In addition to investor uncertainty, if waivers are revoked in the future, there is the potential that the TCRR system would need to stop revenue service, which could have a large impact on passengers who desire to use the high-speed rail system.

FRA also believes that not regulating the system holistically could impose burdens on the Tokaido Shinkansen system and operations that could be detrimental to the overall safety of the system. The Tokaido Shinkansen system has a proven safety record with over 50 years of service without a single passenger-related injury or fatality. Both TCRR and FRA believe that the integration of the whole Tokaido Shinkansen system is needed to ensure the historical safety record is maintained on TCRR. For example, if TCRR allowed MOW workers to perform maintenance during revenue service, there is a potential that the MOW workers could be injured or killed. By not allowing the MOW workers to perform maintenance during revenue service, JRC removed the risk potential entirely. Any deviation from the Tokaido Shinkansen system, as it is implemented in Japan, could result in a decrease in the overall safety of the system.

B. Regulatory Flexibility Act and Executive Order 13272

The Regulatory Flexibility Act of 1980 (5 U.S.C. 601 *et seq.*) and Executive Order 13272 (67 FR 53461, Aug. 16, 2002) require agency review of proposed and final rules to assess their impacts on small entities. An agency must prepare an Initial Regulatory Flexibility Analysis (IRFA) unless it determines and certifies that a rule, if promulgated, would not have a significant economic impact on a substantial number of small entities. As discussed below, FRA does not believe this proposed rule would have a significant economic impact on a substantial number of small entities. However, FRA is requesting comments on whether the proposed rule would impact small entities. Therefore, FRA is publishing this IRFA to aid the public in commenting on the potential small business impacts of the requirements in this NPRM. FRA invites all interested parties to submit data and information regarding the potential economic impact on small entities that would result from the adoption of the proposals in this NPRM. FRA will consider all information, including comments received in the public comment process, to determine whether the rule will have a significant economic impact on small entities.

1. Reasons FRA Is Considering the Proposed Rule

The proposed rule takes a systems-approach to safety, and so includes standards that address all aspects of the TCRR high-speed system, including signal and trainset control, track safety, rolling stock, operating rules and practices, system qualification tests, and personnel qualifications. In addition, the proposed rule would make applicable certain FRA regulations that apply to all railroads, which are appropriate for application to TCRR, such as alcohol and drug standards, hours of service requirements, and locomotive engineer and conductor certification. Consistent with its statement in the most recent Passenger Equipment Safety Standards final rule, published November 21, 2018 (83 FR 59182), FRA proposes to regulate the TCRR system as a standalone system.

[10] Note that FRA has not made any determination regarding the potential financial viability of the TCRR proposal, even under the terms of this NPRM.

[11] On average, waivers would need to be renewed every 5 years; however, given the complexity of the TCRR system it is unknown if those waivers would need to be renewed more often.

[12] Waivers are designed to provide relief from a specific regulatory provision and not to provide regulatory oversight for an entire railroad system.

2. Objectives and the Legal Basis for the Proposed Rule

The Federal railroad statutes apply to all railroads, as defined in 49 U.S.C. 20102, including the TCRR system proposed to be built in Texas.

3. Description and Estimate of the Number of Small Entities Affected

The Regulatory Flexibility Act of 1980 (5 U.S.C. 601 *et seq.*) requires a review of proposed and final rules to assess their impact on small entities, unless the Secretary certifies that the rule would not have a significant economic impact on a substantial number of small entities. ''Small entity'' is defined in 5 U.S.C. 601 as a small business concern that is independently owned and operated, and is not dominant in its field of operation. The U.S. Small Business Administration (SBA) has authority to regulate issues related to small businesses, and stipulates in its size standards that a ''small entity'' in the railroad industry is a for profit ''line-haul railroad'' that has fewer than 1,500 employees, a ''short line railroad'' with fewer than 500 employees, or a ''commuter rail system'' with annual receipts of less than seven million dollars. *See* ''Size Eligibility Provisions and Standards,'' 13 CFR part 121, subpart A. Additionally, section 601(5) of the Small Business Act defines ''small entities'' as governments of cities, counties, towns, townships, villages, school districts, or special districts with populations less than 50,000 that operate railroads.

Federal agencies may adopt their own size standards for small entities in consultation with SBA and in conjunction with public comment. Thus, in consultation with SBA, FRA has published a final statement of agency policy that formally establishes ''small entities'' or ''small businesses'' as railroads, contractors and shippers that meet the revenue requirements of a Class III railroad [13]—$20 million or less in inflation-adjusted annual revenue—and commuter railroads or small government jurisdictions that serve populations of 50,000 or less.[14]

The ''universe'' of entities this NPRM would affect includes only those small entities that can reasonably be expected to be directly affected by the provisions of this rule. In this case, the ''universe'' consists of a single railroad, TCRR. For the purposes of this analysis, TCRR is not considered a small entity, as it is considered to be a passenger railroad, and therefore doesn't meet any of the above definitions of a ''small entity'' or a ''small business.''

FRA requests comments about the impact that the proposed regulation would have on TCRR.

4. Description and Estimate of Compliance Requirements Including Differences in Cost, if Any, for Different Groups of Small Entities

As TCRR is not considered a small entity and, furthermore, is the only entity being regulated through the proposed regulation, there are no compliance requirements that would impact any small entities.

5. Identification of Relevant Federal Rules That May Duplicate, Overlap, or Conflict With the Proposed Rule

The proposed rule takes a systems-approach, and so includes standards that address all aspects of the TCRR high-speed system signal and trainset control, track safety, rolling stock, operating rules and practices, system qualification tests, and personnel qualifications. In addition, the proposed rule would make applicable certain existing FRA regulations that apply to all railroads, which are appropriate for application to TCRR, such as alcohol and drug standards, hours of service requirements, and locomotive engineer and conductor certification. No new regulations are being created with the proposed rule but rather, the thresholds of specific general rules of applicability that apply to all railroads are being modified to accommodate the unique Tokaido Shinkansen high-speed rail system.

As no new regulations are being created with the proposed rule, FRA doesn't believe there is any overlap or conflict with any rules and regulations. FRA requests comments regarding any overlap or conflict with other rules and regulations that might result from the proposed rule.

6. Significant Regulatory Alternatives

FRA has a regulatory program in place, pursuant to its statutory authority, to address equipment, track, operating practices, and human factors in the existing, conventional railroad environment. However, significant operational and equipment differences exist between the system proposed for Texas and existing passenger operations in the United States. In many of the railroad safety disciplines, FRA's current regulations do not adequately address the safety concerns and operational characteristics of the proposed TCRR system. Therefore, to assure the public that this new system will operate safely, minimum Federal safety standards must be in place when TCRR commences operations.

Furthermore, as TCRR is not considered a small entity and is the only entity being regulated through the proposed rule, there is no economic impact to a small entity for which an alternative regulatory approach is needed in order to minimize the potential impact to small entities.

FRA invites all interested parties to submit data and information regarding the potential economic impact that would result from adoption of the proposals in this NPRM. FRA will consider all comments received in the public comment process when making a determination.

C. Paperwork Reduction Act

In accordance with the Paperwork Reduction Act of 1995, 44 U.S.C 3501–3520, and its implementing regulations, 5 CFR part 1320, when information collection requirements pertain to nine or fewer entities, Office of Management and Budget (OMB) approval of the collection requirements is not required. This regulation pertains to one railroad, and therefore, OMB approval of the paperwork collection requirements in this proposed rule is not required.

D. Federalism Implications

E.O. 13132, ''Federalism'' (64 FR 43255, Aug. 10, 1999), requires FRA to develop an accountable process to ensure ''meaningful and timely input by State and local officials in the development of regulatory policies that have federalism implications.'' ''Policies that have federalism implications'' are defined in the Executive Order to include regulations that have ''substantial direct effects on the States, on the relationship between the national government and the States, or on the distribution of power and responsibilities among the various levels of government.'' Under E.O. 13132, the agency may not issue a regulation with federalism implications that imposes substantial direct compliance costs and that is not required by statute, unless the Federal Government provides the funds necessary to pay the direct compliance costs incurred by State and local governments, or the agency consults with State and local government officials early in the process of developing the regulation. Where a regulation has federalism implications and preempts State law, the agency seeks to consult with State and local officials in the process of developing the regulation.

This proposed rule has been analyzed under the principles and criteria

[13] *See* 49 CFR 1201.1

[14] *See* 68 FR 24891 (May 9, 2003) (codified at appendix C to 49 CFR part 209).

contained in E.O. 13132. This proposed rule will not have a substantial effect on the States or their political subdivisions, and it will not affect the relationships between the Federal Government and the States or their political subdivisions, or the distribution of power and responsibilities among the various levels of government. In addition, FRA has determined that this regulatory action will not impose substantial direct compliance costs on the States or their political subdivisions. Therefore, the consultation and funding requirements of E.O. 13132 do not apply.

However, the final rule arising from this rulemaking could have preemptive effect by operation of law under certain provisions of the Federal railroad safety statutes, specifically the former Federal Railroad Safety Act of 1970, repealed and recodified at 49 U.S.C. 20106, and the former Locomotive Boiler Inspection Act (LIA) at 45 U.S.C. 22–34, repealed and re-codified at 49 U.S.C. 20701–20703. Section 20106 provides that States may not adopt or continue in effect any law, regulation, or order related to railroad safety or security that covers the subject matter of a regulation prescribed or order issued by the Secretary of Transportation (with respect to railroad safety matters) or the Secretary of Homeland Security (with respect to railroad security matters), except when the State law, regulation, or order qualifies under the ''essentially local safety or security hazard'' exception to section 20106. Moreover, the former LIA has been interpreted by the Supreme Court as preempting the field concerning locomotive safety. *See Napier* v. *Atlantic Coast Line R.R.,* 272 U.S. 605 (1926).

E. International Trade Impact Assessment

The Trade Agreements Act of 1979 (Pub. L. 96–39, 19 U.S.C. 2501 *et seq.*) prohibits Federal agencies from engaging in any standards or related activities that create unnecessary obstacles to the foreign commerce of the United States. Legitimate domestic objectives, such as safety, are not considered unnecessary obstacles. The statute also requires consideration of international standards and, where appropriate, that they be the basis for U.S. standards.

FRA has assessed the potential effect of this proposed rulemaking on foreign commerce and believes that its proposed requirements are consistent with the Trade Agreements Act. The requirements are safety standards, which, as noted, are not considered unnecessary obstacles to trade.

F. Environmental Impact

FRA is evaluating the potential environmental impacts that may result from this proposed rule in accordance with the National Environmental Policy Act (NEPA; 42 U.S.C. 4321 *et seq.*), other environmental statutes, related regulatory requirements, and its ''Procedures for Considering Environmental Impacts'' (FRA's Procedures) (64 FR 28545, May 26, 1999). FRA released a draft environmental impact statement (EIS) for public comment on December 22, 2017. The public comment period on the draft EIS closed on March 9, 2018. FRA is addressing public comments received on the draft EIS and conducting additional environmental analysis as needed to inform its preparation of the final EIS. FRA must issue the final EIS and its record of decision before issuing the final rule establishing an alternative regulatory framework for safety oversight of the system proposed by TCRR. The draft EIS is available on FRA's website at *https://www.fra.dot.gov/Page/P0700.* FRA will provide notice of publication of the final EIS to the public in the **Federal Register**, through the Environmental Protection Agency's weekly Notice of Availability, and on its website at the above web address.

G. Executive Order 12898 (Environmental Justice)

E.O. 12898, ''Federal Actions to Address Environmental Justice in Minority Populations and Low-Income Populations,'' and DOT Order 5610.2(a) (91 FR 27534, May 10, 2012) require DOT agencies to achieve environmental justice as part of their mission by identifying and addressing, as appropriate, disproportionately high and adverse human health or environmental effects, including interrelated social and economic effects, of their programs, policies, and activities on minority populations and low-income populations. The DOT Order instructs DOT agencies to address compliance with E.O. 12898 and requirements within the DOT Order in rulemaking activities, as appropriate. FRA has evaluated this proposed rule under E.O. 12898 and the DOT Order and has determined that it will not cause disproportionately high and adverse human health and environmental effects on minority populations or low-income populations.

H. Executive Order 13175 (Tribal Consultation)

FRA has evaluated this proposed rule in accordance with the principles and criteria contained in E.O. 13175, ''Consultation and Coordination with Indian Tribal Governments,'' dated November 6, 2000. This proposed rule will not have a substantial direct effect on one or more Indian tribes, will not impose substantial direct compliance costs on Indian tribal governments, and will not preempt tribal laws. Therefore, the funding and consultation requirements of E.O. 13175 do not apply, and a tribal summary impact statement is not required.

I. Unfunded Mandates Reform Act of 1995

Under section 201 of the Unfunded Mandates Reform Act of 1995 (Pub. L. 104–4, 2 U.S.C. 1531), each Federal agency ''shall, unless otherwise prohibited by law, assess the effects of Federal regulatory actions on State, local, and tribal governments, and the private sector (other than to the extent that such regulations incorporate requirements specifically set forth in law).'' Section 202 of the Act (2 U.S.C. 1532) further requires that ''before promulgating any general notice of proposed rulemaking that is likely to result in the promulgation of any rule that includes any Federal mandate that may result in expenditure by State, local, and tribal governments, in the aggregate, or by the private sector, of $100,000,000 or more (adjusted annually for inflation) in any 1 year, and before promulgating any final rule for which a general notice of proposed rulemaking was published, the agency shall prepare a written statement'' detailing the effect on State, local, and tribal governments and the private sector. This proposed rule will not result in the expenditure, in the aggregate, of $100,000,000 or more (as adjusted annually for inflation) in any one year, and thus preparation of such a statement is not required.

J. Energy Impact

E.O. 13211, ''Actions Concerning Regulations That Significantly Affect Energy Supply, Distribution, or Use,'' requires Federal agencies to prepare a Statement of Energy Effects for any ''significant energy action.'' *See* 66 FR 28355, May 22, 2001. FRA has evaluated this proposed rule in accordance with E.O. 13211 and determined that this regulatory action is not a ''significant energy action'' within the meaning of the E.O.

E.O. 13783, ''Promoting Energy Independence and Economic Growth,'' requires Federal agencies to review regulations to determine whether they potentially burden the development or use of domestically produced energy

resources, with particular attention to oil, natural gas, coal, and nuclear energy resources. *See* 82 FR 16093, March 31, 2017. FRA has determined this regulatory action will not burden the development or use of domestically produced energy resources.

K. Privacy Act Statement

In accordance with 5 U.S.C. 553(c), DOT solicits comments from the public to better inform its rulemaking process. DOT posts these comments, without edit, to *www.regulations.gov,* as described in the system of records notice, DOT/ALL–14 FDMS, accessible through *www.dot.gov/privacy.* To facilitate comment tracking and response, we encourage commenters to provide their name, or the name of their organization; however, submission of names is completely optional. Whether commenters identify themselves, all timely comments will be fully considered. If you wish to provide comments containing proprietary or confidential information, please contact the agency for alternate submission instructions.

List of Subjects

High-speed rail, Incorporation by reference, Railroad safety, Reporting and recordkeeping requirements, Rule of particular applicability, Tokaido Shinkansen.

The Proposed Rule

For the reasons discussed in the preamble, FRA proposes to add part 299 to chapter II, subtitle B of title 49, Code of Federal Regulations as follows:

1. Part 299 is added to read as follows:

PART 299—TEXAS CENTRAL RAILROAD HIGH–SPEED RAIL SAFETY STANDARDS

Subpart A—General Requirements

Sec.
299.1 Purpose and scope.
299.3 Applicability.
299.5 Definitions.
299.7 Responsibility for compliance.
299.9 Notifications and filings.
299.11 Electronic recordkeeping.
299.13 System description.
299.15 Special approvals.
299.17 Incorporation by reference.

Subpart B—Signal and Trainset Control System

299.201 Technical PTC system requirements.
299.203 PTC system required.
299.205 PTC System Certification.
299.207 PTC Safety Plan content requirements.
299.209 PTC system use and failures.
299.211 Communications and security requirements.
299.213 Records retention.
299.215 Operations and Maintenance Manual.

Subpart C—Track Safety Standards

299.301 Restoration or renewal of track under traffic conditions.
299.303 Measuring track not under load.
299.305 Drainage.
299.307 Vegetation.
299.309 Classes of track: operating speed limits.
299.311 Track geometry; general.
299.313 Track geometry; performance based.
299.315 Curves; elevations and speed limitations.
299.317 Track strength.
299.319 Track fixation and support.
299.321 Defective rails.
299.323 Continuous welded rail (CWR) plan.
299.325 Continuous welded rail (CWR); general.
299.327 Rail end mismatch.
299.329 Rail joints and torch cut rails.
299.331 Turnouts and crossings generally.
299.333 Frog guard rails and guard faces; gauge.
299.335 Derails.
299.337 Automated vehicle-based inspection systems.
299.339 Daily sweeper inspection.
299.341 Inspection of rail in service.
299.343 Initial inspection of new rail and welds.
299.345 Visual inspections; right-of-way.
299.347 Special inspections.
299.349 Inspection records.
299.351 Qualifications for track maintenance and inspection personnel.
299.353 Personnel qualified to supervise track restoration and renewal.
299.355 Personnel qualified to inspect track.
299.357 Personnel qualified to inspect and restore continuous welded rail.

Subpart D—Rolling Stock

299.401 Clearance requirements.
299.403 Trainset structure.
299.405 Trainset interiors.
299.407 Glazing.
299.409 Brake system.
299.411 Bogies and suspension system.
299.413 Fire safety.
299.415 Doors.
299.417 Emergency lighting.
299.419 Emergency communication.
299.421 Emergency roof access.
299.423 Markings and instructions for emergency egress and rescue access.
299.425 Low-location emergency exit path marking.
299.427 Emergency egress windows.
299.429 Rescue access windows.
299.431 Driver's controls and cab layout.
299.433 Exterior lights.
299.435 Electrical system design.
299.437 Automated monitoring.
299.439 Event recorders.
299.441 Trainset electronic hardware and software safety.
299.443 Safety appliances.
299.445 Trainset inspection, testing, and maintenance requirements.
299.447 Movement of defective equipment.

Subpart E—Operating Rules

299.501 Purpose.
299.503 Operating rules; filing and recordkeeping.
299.505 Programs of operational tests and inspections; recordkeeping.
299.507 Program of instruction on operating rules; recordkeeping.

Subpart F—System Qualification Tests

299.601 Responsibility for verification demonstrations and tests.
299.603 Preparation of system-wide qualification test plan.
299.605 Functional and performance qualification tests.
299.607 Pre-revenue service systems integration testing.
299.609 Vehicle/track system qualification.
299.611 Simulated revenue operations.
299.613 Verification of compliance.

Subpart G—Inspection, Testing, and Maintenance Program

299.701 General requirements.
299.703 Compliance.
299.705 Standard procedures for safely performing inspection, testing, and maintenance, or repairs.
299.707 Maintenance intervals.
299.709 Quality control program.
299.711 Inspection, testing, and maintenance program format.
299.713 Program approval procedures.

Appendix A to Part 299—Criteria for Certification of Crashworthy Event Recorder Memory Module

Appendix B to Part 299—Cab Noise Test Protocol

Authority: 49 U.S.C. 20103, 20107, 20133, 20141, 20302–20303, 20306, 20701–20702, 21301–21302, 21304; 28 U.S.C. 2461, note; and 49 CFR 1.89.

Subpart A—General Requirements

§ 299.1 Purpose and scope.

This part prescribes minimum Federal safety standards for the high-speed transportation system described in detail in § 299.13, known as Texas Central Railroad, LLC and hereinafter referred to as the ''railroad.'' The purpose of this part is to prevent accidents, casualties, and property damage which could result from operation of this system.

§ 299.3 Applicability.

(a) This part applies only to the railroad, as described in § 299.13.

(b) Except as stated in paragraph (c) of this section, this part, rather than the generally applicable Federal railroad safety regulations, shall apply to the railroad.

(c) The following Federal railroad safety regulations found in Title 49 of the Code of Federal Regulations, and any amendments are applicable to the railroad.

(1) Part 207, Railroad Police Officers;

(2) Part 209, Railroad Safety Enforcement Procedures;

(3) Part 210, Railroad Noise Emission Compliance Regulations;

(4) Part 211, Rules of Practice;

(5) Part 212, State Safety Participation Regulations;

(6) Part 214, Railroad Workplace Safety, except § 214.339;

(7) Part 216, Special Notice and Emergency Order Procedures;

(8) Part 218, Railroad Operating Practices;

(9) Part 219, Control of Alcohol and Drug Use;

(10) Part 220, Radio Standards and Procedures;

(11) Part 225, Railroad Accidents/Incidents: Reports, Classification, and Investigations;

(12) Part 227, Occupational Noise Exposure except § 227.119(c)(10) and (11) with respect to the railroad's high-speed trainsets only, which shall comply with 299.431(k) and (l);

(13) Part 228, Hours of Service of Railroad Employees;

(14) Part 233, Signal Systems Reporting Requirements;

(15) Part 235, Instructions Governing Applications for Approval of a Discontinuance or Material Modification of a Signal System or Relief from the Requirements of Part 236, except § 235.7;

(16) Part 236, Installation, Inspection, Maintenance and Repair of Signal and Train Control System, Devices, and Appliances, subparts A through G, as excepted by the railroad's PTC Safety Plan (PTCSP) under § 299.201(d);

(17) Part 237, Railroad Bridge Safety Standards;

(18) Part 239, Passenger Train Emergency Preparedness;

(19) Part 240, Qualification and Certification of Locomotive Engineers;

(20) Part 242, Qualification and Certification of Train Conductors;

(21) Part 243, Training, Qualification, and Oversight for Safety-Related Railroad Employees;

(22) Part 270, System Safety Program

(23) Part 272, Critical Incident Stress Plans; and

(24) The following parts shall apply to the railroad's maintenance-of-way equipment as it is used in work trains, rescue operations, yard movements, and other non-passenger functions:

(i) Part 215, Railroad Freight Car Safety Standards;

(ii) Part 223 Glazing Standards;

(iii) Part 229, Railroad Locomotive Safety Standards, except—

(A) Section 229.71. Instead, the railroad's maintenance-of-way equipment shall comply with § 299.401(b), except for the sweeper vehicle, which shall have a clearance above top of rail no less than 35 mm (1.77 inches).

(B) Section 229.73. Instead, the railroad's maintenance-of-way equipment shall be designed so as to be compatible with the railroad's track structure under subpart C of this part.

(iv) Part 231, Railroad Safety Appliance Standards; and,

(v) Part 232, Railroad Power Brakes and Drawbars.

(d) The Federal railroad safety statutes apply to all railroads, as defined in 49 U.S.C. 20102. The railroad covered by this part is a railroad under that definition. Therefore, the Federal railroad safety statutes, Subtitle V of Title 49 of the United States Code, apply directly to the railroad. However, pursuant to authority granted under 49 U.S.C. 20306, FRA has exempted the railroad from certain requirements of 49 U.S.C. ch. 203.

§ 299.5 Definitions.

As used in this part—

Absolute block means a block of track circuits in which no trainset is permitted to enter while occupied by another trainset.

Adjusting/de-stressing means the procedure by which a rail's neutral temperature is readjusted to the desired value. It typically consists of cutting the rail and removing rail anchoring devices, which provides for the necessary expansion and contraction, and then re-assembling the track.

Administrator means the Administrator of the FRA or the Administrator's delegate.

Associate Administrator means FRA's Associate Administrator for Safety and Chief Safety Officer, or that person's delegate.

Automatic train control (ATC) means the signaling system, composed of ground and on-board equipment. The on-board equipment continually receives a signal from the ground equipment. ATC on-board equipment controls the trainset speed to prevent train-to-train collisions and overspeed derailments.

ATC cut-out mode means the mode of ATC on-board equipment used for emergency operations to disable the ATC on-board equipment on the trainset.

ATC main line mode means the mode of ATC on-board equipment which controls trainset speed on mainlines.

ATC overrun protection means an overlay of the ATC shunting mode to prevent overrun at the end of a track.

ATC shunting mode means the mode of ATC on-board equipment which restricts the trainsets maximum speed to 30 km/h (19 mph).

Brake, air means a combination of devices operated by compressed air, arranged in a system and controlled electrically or pneumatically, by means of which the motion of a train or trainset is retarded or arrested.

Brake, disc means a retardation system used on the passenger trainsets that utilizes flat discs as the braking surface.

Brake, electric means a trainset braking system in which the kinetic energy of a moving trainset is used to generate electric current at the traction motors, which is then returned into the catenary system.

Brake, emergency application means a brake application initiated by a de-energized brake command and is retrievable when there is no malfunction that initiates an automatic emergency brake application. An emergency brake application can be initiated by the driver or automatically by ATC. An emergency brake application, as defined here, is equivalent to a full-service brake application in the U.S.

Brake, urgent application means an irretrievable brake application designed to minimize the braking distance. An urgent brake application, as defined here, is the equivalent of an emergency brake application in the U.S.

Bogie means an assembly that supports the weight of the carbody and which incorporates the suspension, wheels and axles, traction motors and friction brake components. Each unit of a trainset is equipped with two bogies. In the U.S. a bogie is commonly referred to as a truck.

Broken rail means a partial or complete separation of an otherwise continuous section of running rail, excluding rail joints, expansion joints, and insulated joints.

Buckling incident/buckling rail means the formation of a lateral misalignment caused by high longitudinal compressive forces in a rail sufficient in magnitude to exceed the track geometry alignment safety limits defined in § 299.309.

Buckling-prone condition means a track condition that can result in the track being laterally displaced due to high compressive forces caused by critical rail temperature combined with insufficient track strength and/or train dynamics.

Cab means the compartment or space within a trainset that is designed to be occupied by a driver and contain an operating console for exercising control over the trainset.

Cab car means a rail vehicle at the leading or trailing end, or both, of a trainset which has a driver's cab and is

intended to carry passengers, baggage, or mail. A cab car may or may not have propelling motors.

Cab end structure means the main support projecting upward from the underframe at the cab end of a trainset.

Cab signal means a signal located in the driver's compartment or cab, indicating a condition affecting the movement of a trainset.

Calendar day means a time period running from one midnight to the next midnight on a given date.

Cant deficiency means the additional height, which if added to the outer rail in a curve, at the designated vehicle speed, would provide a single resultant force, due to the combined effects of weight and centrifugal force on the vehicle, having a direction perpendicular to the plane of the track.

Continuous welded rail (CWR) means rail that has been welded together into lengths exceeding 122 m (400 feet). Rail installed as CWR remains CWR, regardless of whether a joint is installed into the rail at a later time.

Consist, fixed means a semi-permanently coupled trainset that is arranged with each unit in a specific location and orientation within the trainset.

Core system, high-speed means the safety-critical systems, sub-systems, and procedures required for a high-speed system operation that assures a safe operation as required within this part.

Crewmember means a railroad employee called to perform service covered by 49 U.S.C. 21103.

Critical buckling stress means the minimum stress necessary to initiate buckling of a structural member.

Desired rail installation temperature range means the rail temperature range in a specific geographical area, at which forces in CWR installed in that temperature range should not cause a track buckle in extreme heat, or a pull-apart during extreme cold weather.

Disturbed track means the disturbance of the roadbed or ballast section, as a result of track maintenance or any other event, which reduces the lateral or longitudinal resistance of the track, or both.

Driver means any person who controls the movement of a trainset(s) from the cab, and is required to be certified under 49 CFR part 240. A driver, as used in this part, is equivalent to a locomotive engineer.

Employee or railroad employee means an individual who is engaged or compensated by the railroad or by a contractor to the railroad to perform any of the duties defined in this part.

Event recorder means a device, designed to resist tampering, that monitors and records data, as detailed in §§ 299.439 and 236.1005(d) of this chapter, over the most recent 48 hours of operation of the trainset.

Expansion joint means a piece of special trackwork designed to absorb heat-induced expansion and contraction of the rails.

General control center means the location where the general control center staff work.

General control center staff means qualified individuals located in the general control center who are responsible for the safe operation of the railroad's high-speed passenger rail system. The duties of individuals who work at the general control center include: Trainset movement control, crew logistic management, signaling, passenger services, rolling stock logistic management, and right-of-way maintenance management.

Glazing, end-facing means any exterior glazing installed in a trainset cab located where a line perpendicular to the exterior surface glazing material makes horizontal angle of 50 degrees or less with the longitudinal center line of the rail vehicle in which the panel is installed. A glazing panel that curves so as to meet the definition for both side-facing and end-facing glazing is end-facing glazing.

Glazing, exterior means a glazing panel that is an integral part of the exterior skin of a rail vehicle with a surface exposed to the outside environment.

Glazing, side-facing means any glazing located where a line perpendicular to the exterior surface of the panel makes an angle of more than 50 degrees with the longitudinal center line of the rail vehicle in which the panel is installed.

High voltage means an electrical potential of more than 150 volts.

In passenger service/in revenue service means a trainset that is carrying, or available to carry, passengers. Passengers need not have paid a fare in order for the trainset to be considered in passenger or in revenue service.

In service means, when used in connection with trainset, a trainset subject to this part that is in revenue service, unless the equipment—

(1) Is being handled in accordance with § 299.447, as applicable;

(2) Is in a repair shop or on a repair track; or

(3) Is on a storage track and is not carrying passengers.

Insulated joint, glued means a rail joint located at the end of a track circuit designed to insulate electrical current from the signal system in the rail.

Interior fitting means any component in the passenger compartment which is mounted to the floor, ceiling, sidewalls, or end walls and projects into the passenger compartment more than 25 mm (1 in.) from the surface or surfaces to which it is mounted. Interior fittings do not include side and end walls, floors, door pockets, or ceiling lining materials, for example.

Intermediate car means a passenger car or unit of a trainset located between cab cars which may or may not have propelling motors.

L/V ratio means the ratio of the lateral force that any wheel exerts on an individual rail to the vertical force exerted by the same wheel on the rail.

Lateral means the horizontal direction perpendicular to the direction of travel.

Locomotive means a piece of on-track rail equipment, other than hi-rail, specialized maintenance, or other similar equipment, which may consist of one or more units operated from a single control stand with one or more propelling motors designed for moving other passenger equipment; with one or more propelling motors designed to transport freight or passenger traffic, or both; or without propelling motors but with one or more control stands.

Longitudinal means in a direction parallel to the direction of travel of a rail vehicle.

Marking/delineator means a visible notice, sign, symbol, line or trace.

N700 means the N700 series trainset currently in, or future variants approved for, use on JRC's Tokaido Shinkansen system.

Occupied volume means the volume of a passenger car or a unit in a trainset where passengers or crewmembers are normally located during service operation, such as the cab and passenger seating areas. The entire width of a vehicle's end compartment that contains a control stand is an occupied volume. A vestibule is typically not considered occupied.

On-board attendant means a qualified individual on a trainset that is responsible for coordination with a station platform attendant to assure safety during passenger boarding and alighting within a station. An on-board attendant, as used in this part, is equivalent to a passenger conductor.

Override means to climb over the normal coupling or side buffers and linking mechanism and impact the end of the adjoining rail vehicle or unit above the underframe.

Overrun protection coil means track circuit cables placed short of turnouts, or crossovers within stations and trainset maintenance facilities to prevent unauthorized route access.

Passenger car means a unit of a trainset intended to provide transportation for members of the general public. A cab car and an intermediate car are considered passenger cars.

Passenger compartment means an area of a passenger car that consists of a seating area and any vestibule that is connected to the seating area by and open passageway.

Passenger equipment means the N700 series trainset currently in, or future variants approved for, use on the on JRC's Tokaido Shinkansen system, or any unit thereof.

Permanent deformation means the undergoing of a permanent change in shape of a structural member of a rail vehicle.

PTC means positive train control as further described in § 299.201.

Qualified individual means a person that has successfully completed all instruction, training, and examination programs required by both the employer and this part, and that the person, therefore, may reasonably be expected to proficiently perform his or her duties in compliance with all Federal railroad safety laws, regulations, and orders.

Rail neutral temperature is the temperature at which the rail is neither in compression nor tension.

Rail temperature means the temperature of the rail, measured with a rail thermometer.

Rail vehicle means railroad rolling stock, including, but not limited to passenger and maintenance vehicles.

Railroad equipment means all trains, trainsets, rail cars, locomotives, and on-track maintenance vehicles owned or used by the railroad.

Railroad, the means the company, also known as the Texas Central Railroad, LLC, which is the entity that will operate and maintain the high-speed rail system initially connecting Dallas to Houston, Texas, and is responsible for compliance with all aspects of this rule.

Repair point means a location designated by the railroad where repairs of the type necessary occur on a regular basis. A repair point has, or should have, the facilities, tools, and personnel qualified to make the necessary repairs. A repair point need not be staffed continuously.

Representative car/area means a car/area that shares the relevant characteristics as the car(s)/area(s) it represents (*i.e.,* same signage/marking layout, and charging light system for passive systems or light fixtures and power system for electrically powered systems).

Rollover strength means the strength provided to protect the structural integrity of a rail vehicle in the event the vehicle leaves the track and impacts the ground on its side or roof.

Safety appliance means an appliance, required under 49 U.S.C. ch. 203, excluding power brakes. The term includes automatic couplers, handbrakes, crew steps, handholds, handrails, or ladder treads made of steel or a material of equal or greater mechanical strength used by the traveling public or railroad employees that provides a means for safe coupling, uncoupling, or ascending or descending passenger equipment.

Safety-critical means a component, system, software, or task that, if not available, defective, not functioning, not functioning correctly, not performed, or not performed correctly, increases the risk of damage to railroad equipment or injury to a passenger, railroad employee, or other person.

Search, valid means a continuous inspection for internal rail defects where the equipment performs as intended and equipment responses are interpreted by a qualified individual as defined in subpart C.

Semi-permanently coupled means coupled by means of a drawbar or other coupling mechanism that requires tools to perform the coupling or uncoupling operation. Coupling and uncoupling of each semi-permanently coupled unit in a trainset can be performed safely only while at a trainset maintenance facility where personnel can safely get under a unit or between units, or other location under the protections of subpart B of part 218 of this chapter.

Side sill means that portion of the underframe or side at the bottom of the rail vehicle side wall.

Shinkansen, Tokaido means the high-speed rail system operated by the Central Japan Railway Company between Tokyo and Shin-Osaka, Japan, that is fully dedicated and grade separated.

Slab track means railroad track structure in which the rails are attached to and supported by a bed or slab, usually of concrete (or asphalt), which acts to transfer the load and provide track stability.

Spall, glazing means small pieces of glazing that fly off the back surface of the glazing when an object strikes the front surface.

Speed, maximum approved means the maximum trainset speed approved by FRA based upon the qualification tests conducted under § 299.609(g).

Speed, maximum authorized means the speed at which trainsets are permitted to travel safely, as determined by all operating conditions and signal indications.

Speed, maximum safe operating means the highest speed at which trainset braking may occur without thermal damage to the discs.

Station platform attendant means a qualified individual positioned on the station platform in close proximity to the train protection switches while a trainset is approaching and departing a station, and is responsible for coordination with an on-board attendant to assure safety during passenger boarding and alighting within a station.

Superelevation means the actual elevation of the outside rail above the inside rail.

Sweeper vehicle means a rail vehicle whose function is to detect obstacles within the static construction gauge prior to the start of daily revenue service.

Tight track means CWR which is in a considerable amount of compression.

Track acceleration measurement system (TAMS) means an on-track, vehicle-borne technology used to measure lateral and vertical carbody accelerations.

Track geometry measurement system (TGMS) means an on-track, vehicle-borne technology used to measure track surface, twist, crosslevel, alignment, and gauge.

Track lateral resistance means the resistance provided to the rail/crosstie structure against lateral displacement.

Track longitudinal resistance means the resistance provided by the rail anchors/rail fasteners and the ballast section to the rail/crosstie structure against longitudinal displacement.

Track, non-ballasted means a track structure not supported by ballast in which the rails are directly supported by concrete or steel structures. Non-ballasted track can include slab track and track structures where the rails are directly fixed to steel bridges or to servicing pits within trainset maintenance facilities.

Train means a trainset, or locomotive or locomotive units coupled with or without cars.

Train-induced forces means the vertical, longitudinal, and lateral dynamic forces which are generated during train movement and which can contribute to the buckling potential of the rail.

Train protection switch means a safety device located on station platforms and on safe walkways along the right-of-way. The train protection switch is tied directly into the ATC system and is used in the event that trainsets in the immediate area must be stopped.

Trainset means a passenger train including the cab cars and intermediate cars that are semi-permanently coupled to operate as a single consist. The individual units of a trainset are uncoupled only for emergencies or maintenance conducted in repair facilities.

Trainset maintenance facility means a location equipped with the special tools, equipment, and qualified individuals capable of conducting pre-service inspections and regular inspections on the trainsets in accordance with the railroad's inspection, testing, and maintenance program. Trainset maintenance facilities are also considered repair points.

Transponder means a wayside component of the ATC system used to provide trainset position correction on the mainline or to provide an overlay of overrun protection within a trainset maintenance facility.

Underframe means the lower horizontal support structure of a rail vehicle.

Unit, trainset means a cab car or intermediate car of a trainset.

Vestibule means an area of a passenger car that normally does not contain seating, is located adjacent to a side exit door, and is used in passing from a seating area to a side exit door.

Yard means a system of tracks within defined limits and outside of the territory controlled by signals, which can be used for the making up of non-passenger trains or the storing of maintenance-of-way equipment.

Yield strength means the ability of a structural member to resist a change in length caused by a applied load. Exceeding the yield strength will cause permanent deformation of the member.

§ 299.7 Responsibility for compliance.

(a) The railroad shall not—

(1) Use, haul, or permit to be used or hauled on its line(s) any trainset—

(i) With one or more defects not in compliance with this part; or

(ii) That has not been inspected and tested as required by a provision of this part.

(2) Operate over any track, except as provided in paragraph (e) of this section, with one or more conditions not in compliance this part, if the railroad has actual knowledge of the facts giving rise to the violation, or a reasonable person acting in the circumstances and exercising reasonable care would have that knowledge.

(3) Violate any other provision of this part or any provision of the applicable FRA regulations listed under § 299.3(c).

(b) For purposes of this rule, a trainset shall be considered in use prior to the trainset's departure as soon as it has received, or should have received the inspection required under this part for movement and is ready for service.

(c) Although many of the requirements of this part are stated in terms of the duties of the railroad, when any person (including, but not limited to, a contractor performing safety-related tasks under contract to the railroad subject to this part) performs any function required by this part, that person (whether or not the railroad) is required to perform that function in accordance with this part.

(d) For purposes of this part, the railroad shall be responsible for compliance with all track safety provisions set forth in subpart C of this part. When the railroad and/or its assignee have actual knowledge of the facts giving rise to a violation, or a reasonable person acting in the circumstances and exercising reasonable care would have knowledge that the track does not comply with the requirements of this part, it shall—

(1) Bring the track into compliance;

(2) Halt operations over that track; or

(3) Continue operations over the segment of non-complying track in accordance with the provisions of § 299.309(b) or (c).

(e) The FRA Administrator may hold the railroad, the railroad's contractor, or both responsible for compliance with the requirements of this part and subject to civil penalties.

§ 299.9 Notification and filings.

All notifications and filings to the FRA required by this part shall be submitted to the Associate Administrator for Railroad Safety and Chief Safety Officer, 1200 New Jersey Avenue SE, Washington, DC 20590, unless otherwise specified.

§ 299.11 Electronic recordkeeping.

The railroad's electronic recordkeeping shall be retained such that—

(a) The railroad maintains an information technology security program adequate to ensure the integrity of the electronic data storage system, including the prevention of unauthorized access to the program logic or individual records;

(b) The program and data storage system must be protected by a security system that utilizes an employee identification number and password, or a comparable method, to establish appropriate levels of program access meeting all of the following standards:

(1) No two individuals have the same electronic identity; and

(2) A record cannot be deleted or altered by any individual after the record is certified by the employee who created the record.

(c) Any amendment to a record is either—

(1) Electronically stored apart from the record that it amends; or

(2) Electronically attached to the record as information without changing the original record;

(d) Each amendment to a record uniquely identifies the person making the amendment;

(e) The system employed by the railroad for data storage permits reasonable access and retrieval; and

(f) Information retrieved from the system can be easily produced in a printed format which can be readily provided to FRA representatives in a timely manner and authenticated by a designated representative of the railroad as a true and accurate copy of the railroad's records if requested to do so by FRA representatives.

§ 299.13 System description.

(a) *General.* This section describes the components, operations, equipment, and systems of the railroad's high-speed rail system. The railroad shall adhere to the following general requirements:

(1) The railroad shall not exceed the maximum trainset speed approved by FRA under § 299.609(g) while in revenue service, up to a maximum speed of 330 km/h (205 mph).

(2) The railroad shall not transport or permit to be transported in revenue service any product that has been established to be a hazardous material pursuant to 49 CFR part 172, as amended.

(3) The railroad shall not conduct scheduled right-of-way maintenance on a section of the right-of-way prior to that section of the right-of-way being cleared of all revenue service trainsets (including any trainset repositioning moves), and proper action is taken by the general control center staff to protect incursion into established maintenance zones by revenue trainsets. Additionally, the railroad shall not commence revenue service prior to completion of the maintenance activities, that section of the right-of-way being cleared of all maintenance-of-way equipment. Further, the railroad is prohibited from commencing revenue operations until after conclusion of the daily sweeper inspection, under § 299.339, and the general control center returning the signal and trainset control system to the state required to protect revenue operations.

(b) *Right-of-way.* (1) The railroad shall operate on a completely dedicated right-of-way and shall not operate or conduct joint operations with any other freight

equipment, other than the railroad's maintenance-of-way equipment, or passenger rail equipment. Only the railroad's high-speed trainsets approved for revenue operations under this part, and any equipment required for construction, maintenance, and rescue purposes may be operated over the railroad's right-of-way.

(2) There shall be no public highway-rail grade crossings. Animal and non-railroad equipment crossings shall be accomplished by means of an underpass or overpass. Private at-grade crossings shall be for the exclusive use by the railroad and shall be limited to track Classes H0 and H1.

(3) The railroad shall develop and comply with a right-of-way barrier plan. The right-of-way barrier plan shall be maintained at the system headquarters and will be made available to FRA upon request. At a minimum, the plan will contain provisions in areas of demonstrated need for the prevention of—

(i) Vandalism;

(ii) Launching of objects from overhead bridges or structures onto the path of trainsets;

(iii) Intrusion of vehicles from adjacent rights-of-way; and

(iv) Unauthorized access to the right-of-way.

(4) The entire perimeter of the system's right-of-way, except for elevated structures such as bridges and viaducts shall be permanently fenced. Elevated structures shall be equipped with walkways and safety railing.

(5) The railroad shall install intrusion detectors in accordance with the requirements set forth in subpart C of this part.

(6) The railroad shall install rain, flood, and wind detectors in locations identified by the railroad, based on relevant criteria used by JRC to provide adequate warning of when operational restrictions are required due to adverse weather conditions. Operating restrictions shall be defined in the railroad's operating rules.

(7) Access to the right-of-way for maintenance-of-way staff shall be provided on both sides of the right-of-way in accordance with the inspection, testing, and maintenance program. This access shall be protected against entry by unauthorized persons.

(8) Provision shall be made to permit emergency personnel to access the right-of-way in accordance with the Emergency Preparedness Plan pursuant to part 239 of this chapter. This access shall be protected against entry by unauthorized persons.

(9) Throughout the length of the right-of-way, the railroad shall install walkways located at a safe distance from the tracks at a minimum distance of 2.0 m (6.56 feet) from the field side of the outside rail for a design speed of 330 km/h (205 mph). The walkways shall be used primarily for track and right-of-way inspection, but may be used for emergency evacuation or rescue access.

(10) Access to the right-of-way by maintenance-of-way personnel shall not be allowed during revenue operations unless the access is outside the minimum safe distance defined in § 299.13(b)(9). In the event of unscheduled maintenance or repair, emergency access will be provided under specific circumstances allowed under the railroad's operating rules and the inspection, testing, and maintenance program.

(11) The railroad shall record all difficulties and special situations regarding geology, hydrology, settlement, landslide, concrete, and quality criteria that arise during construction of the right-of-way. After construction, the railroad shall monitor the stability and quality standards of structures such as bridges, viaducts, and earth structures.

(12) The railroad shall make available for review by the FRA the track layout drawings which show, at a minimum, the following information:

(i) Length of straight sections, spirals and curves, curve radius, superelevation, superelevation variations, gradients, and vertical curve radii;

(ii) Turnouts and crossover location, technology, and geometry;

(iii) Maximum operating speed and allowable cant deficiencies;

(iv) Signal boxes, Go/No-Go signals, and communication devices;

(v) Details and arrangement of track circuitry;

(vi) Power feeding equipment including sectionalization, and return routing;

(vii) Location of accesses to the right-of-way; and

(viii) The railroad shall also submit the specifications for the track layout, permissible track forces, components such as rail, ballast, ties, rail fasteners, and switches.

(13) Protection devices shall be installed on all highway bridge overpasses in accordance with the right-of-way plan in paragraph (b)(3) of this section.

(14) There shall be no movable bridges in the railroad's system. Stationary rail bridges located over highways or navigable waterways shall have their foundations, piers, or other support structure appropriately protected against the impact of road vehicles or water-borne vessels.

(15) Train protection switches shall be installed at regular intervals on both sides of the right-of-way at intervals defined by the railroad and at intervals not to exceed 60 m (197 feet) on platforms within stations. These devices shall act directly on the ATC system.

(16) The railroad shall use the design wheel and rail profiles, service-proven on the Tokaido Shinkansen system, or alternate wheel and rail profiles approved by FRA.

(c) *Railroad system safety*—(1) *Inspection, testing, and maintenance procedures and criteria.* The railroad shall develop, implement, and use a system of inspection, testing, maintenance procedures and criteria, under subpart G of this part, which are initially based on the Japanese Tokaido Shinkansen system service-proven procedures and criteria, to ensure the integrity and safe operation of the railroad's rolling stock, infrastructure, and signal and trainset control system. The railroad may, subject to FRA review and approval, implement inspection, testing, maintenance procedures and criteria, incorporating new or emerging technology, under § 299.713(d)(4).

(2) *Operating practices.* The railroad shall develop, implement, and use operating rules, which meet the standards set forth in subpart E of this part and which are based on practices and procedures proven on the Tokaido Shinkansen system to ensure the integrity and safe operation of the railroad's system. The railroad shall have station platform attendants on the platform in close proximity to the train protection switches required by paragraph (b)(15) of this section, while trainsets are approaching and departing the station. The railroad's operating rules shall require coordination between on-board crew and station platform attendants to assure safety during passenger boarding and alighting from trainsets at stations.

(3) *Personnel qualification requirements.* The railroad shall develop, implement, and use a training and testing program, which meets the requirements set forth in this part and part 243 of this chapter, to ensure that all personnel, including railroad employees and employees of railroad contractors, possess the skills and knowledge necessary to effectively perform their duties.

(4) *System qualification tests.* The railroad shall develop, implement, and use a series of operational and design tests, which meet the standards set forth in subpart F of this part, to demonstrate

the safe operation of system components, and the system as a whole.

(d) *Track and infrastructure.* (1) The railroad shall construct its track and infrastructure to meet all material and operational design criteria, within normal acceptable construction tolerances, and to meet the requirements set forth in subpart C of this part.

(2) The railroad shall operate on nominal standard gauge, 1,435 mm (56.5 inches), track.

(3) The railroad shall install and operate on double track throughout the mainlines, with a minimum nominal distance between track centerlines of 4 m (13.1 feet) for operating speeds up to 170 km/h (106 mph) (track Classes up to H4) and 4.2 m (13.8 feet) for operating speeds greater than 170 km/h (106 mph) (track Classes H5 and above). Generally, each track will be used for a single direction of traffic, and trainset will not overtake each other on mainline tracks (except at non-terminal station locations). The railroad may install crossover connections between the double track at each station, and at regular intervals along the line to permit flexibility in trainset operations, maintenance, and emergency rescue.

(4) The railroad's main track (track Classes H4 and above) shall consist of continuous welded rail. Once installed, the rail shall be field-welded to form one continuous track segment except rail expansion joints and where glued-insulated joints are necessary for signaling purposes. The rail shall be JIS E 1101 60 kg rail, as specified in JIS E 1101:2011 as amended by JIS E 1101:2012, and JIS E 1101:2016 (all incorporated by reference, see § 299.17).

(5) In yards and maintenance facilities, where operations will be at lower speeds, the railroad shall install either JIS E 1101 50kgN rail or JIS E 1101 60 kg rail as specified in JIS E 1101:2011 as amended by JIS E 1101:2012, and JIS E 1101:2016 (all incorporated by reference, see § 299.17).

(6) The railroad shall use either ballasted or non-ballasted track to support the track structure, as appropriate for the intended high-speed system.

(i) Except as noted in paragraph (c)(6)(ii) of this section, for ballasted mainline track structure, the railroad shall install pre-stressed concrete ties.

(ii) For special track work such as turnouts and expansion joints, and at transitions to bridges, and for non-ballasted track, the railroad shall install either pre-stressed, composite ties, or use direct fixation. Detailed requirements are included in subpart C of this part.

(7) Turnouts, expansion joints and glued-insulated joints shall be of the proven design as used on the Tokaido Shinkansen system.

(8) The trainsets and stations shall be designed to permit level platform boarding for passengers and crew at all side entrance doors. Provisions for high level boarding shall be made at all locations in trainset maintenance facilities where crew and maintenance personnel are normally required to access or disembark trainsets.

(e) *Signal and trainset control systems.* (1) The railroad's signal and trainset control systems, shall be based upon the service-proven system utilized on the Tokaido Shinkansen system and shall include an automatic train control (ATC) system, interlocking equipment, and wayside equipment, including: Track circuits, transponders, and Go/No-Go signals in stations and trainset maintenance facilities.

(2) The railroad's signaling system shall extend beyond the mainline into trainset maintenance facilities and be designed to prevent collisions at all speeds.

(3) The ATC system shall be designed with a redundant architecture utilizing a intrinsic fail-safe design concept.

(4) The trainset braking curves shall be determined by the on-board equipment based on the ATC signal from the ground facility and on-board database that includes the alignment and rolling stock performance data. The on-board equipment shall generate the braking command based upon the trainset location, speed, and braking curves.

(5) The ATC on-board equipment shall have three modes: Mainline, shunting, and cut-out.

(i) Mainline mode shall be used for operations on mainlines and for entering into the trainset maintenance facilities. The mainline mode of ATC on-board equipment shall provide the following functions:

(A) Prevent train-to-train collisions; and

(B) Prevent overspeed derailments.

(ii) Shunting mode shall be used to protect movements within trainset maintenance facilities and for emergency operations as required by the operating rules. When operating in shunting mode, the trainset shall be restricted to a maximum speed of 30 km/h.

(iii) Cut-out mode shall be used for emergency operations and/or in the event of an ATC system failure as required by the operating rules.

(6) Interlocking equipment shall prevent the movement of trainsets through a switch in an improper position and command switch-and-lock movements on mainlines and within trainset maintenance facilities.

(7) Track circuits shall be used to provide broken rail detection.

(8) Overrun protection coils shall be used at mainline turnouts, crossovers within stations and trainset maintenance facilities to prevent unauthorized route access.

(9) Transponders shall be used on the mainline to provide trainset position correction. Transponders may be used to provide an overlay of overrun protection within a trainset maintenance facility.

(10) Go/No-Go signals shall be used in stations for shunting and emergency operations and in trainset maintenance facilities to provide trainset movement authority.

(11) The railroad shall include an intrusion detection system as required by paragraph (b)(3) and (5) of this section that shall interface with the ATC system and have the capability to stop the trainset under specified intrusion scenarios.

(f) *Communications.* (1) The railroad shall install a dedicated communication system along the right-of-way to transmit data, telephone, and/or radio communications that is completely isolated and independent of the signal and trainset system. To ensure transmission reliability, the system shall include back-up transmission routes.

(2) For trainset operation and maintenance, the railroad shall install—

(i) A portable radio system for maintenance and service use; and

(ii) A trainset radio, which shall facilitate communication between each trainset and the general control center.

(g) *Rolling stock.* (1) The railroad's rolling stock shall be designed, operated, and maintained in accordance with the requirements set forth in subparts D, E, and H of this part.

(2) The railroad shall utilize bi-directional, fixed-consist, electric multiple unit (EMU), high-speed trainsets based on the N700.

(3) Each trainset shall be equipped with wheel slide control.

(4) Each trainset shall be equipped with two electrically connected pantographs. The position of the pantographs (up or down) shall be displayed in the driver's cab.

(5) The driver's cab shall be a full width and dedicated cab and shall be arranged to enhance safety of operation, range of vision, visibility and readability of controls and indicators, accessibility of controls, and climate control.

(6) The railroad's passenger equipment brake system shall be based

on the N700's design and shall meet the following standards:

(i) Each trainset shall be equipped with an electronically controlled brake system that shall ensure that each unit in the trainset responds independently to a brake command. The brake command shall be transmitted through the on-board internal trainset control network, as well as through the trainline for redundancy.

(A) Motorized cars shall be equipped with regenerative and electronically controlled pneumatic brakes. The system shall be designed to maximize the use of regenerative brakes.

(B) Non-motorized cars shall be equipped with electronically controlled pneumatic brakes.

(C) The friction brakes on each bogie shall be cheek mounted disc brakes.

(D) Each car shall be equipped with an electronic and pneumatic brake control unit and a main reservoir. The system shall be designed that in the event of a failure of an electronic control unit in a car, brake control shall be provided by the electronic control unit on the adjacent car. Each car in the trainset shall be equipped with a backup wheel slide protection controller that will provide wheel slide protection in the event of a wheel slide protection controller failure.

(ii) The braking system shall be designed with the following brake controls: Service, emergency, urgent, and rescue brake.

(iii) The service and emergency brake shall be applied automatically by ATC or manually by the driver.

(iv) The urgent brake control shall be independent of the service and emergency brake control and shall be automatically applied if the trainset is parted. Application of the urgent brake shall produce an irretrievable stop. The urgent brake force shall be designed to vary according to speed in order to minimize the braking distance and avoid excessive demand of adhesion at higher speeds.

(v) A disabled trainset shall be capable of having its brake system controlled electronically by a rescue trainset.

(vi) Independent of the driver's brake handle in the cab, each trainset shall be equipped with two urgent brake switches in each cab car, accessible only to the crew; located adjacent to the door control station and that can initiate an urgent brake application. If door control stations are provided in intermediate cars that are accessible only to crew members, then the urgent brake switches must also be included adjacent to the door control stations.

(vii) The railroad shall establish a maximum safe operating speed to address brake failures that occur in revenue service as required by § 299.409(f)(4). In the event of any friction brake failure on a trainset, the speed shall be limited by ATC on-board equipment in accordance with the brake failure switch position selected by the driver and as required by § 299.447.

§ 299.15 Special approvals.

(a) *General.* The following procedures govern consideration and action upon requests for special approval of alternative standards to this part.

(b) *Petitions for special approval of alternative standard.* Each petition for special approval of an alternative standard shall contain—

(1) The name, title, address, and telephone number of the primary person to be contacted with regard to review of the petition;

(2) The alternative proposed, in detail, to be substituted for the particular requirements of this part; and

(3) Appropriate data or analysis, or both, establishing that the alternative will provide at least an equivalent level of safety.

(c) *Petitions for special approval of alternative compliance.* Each petition for special approval of alternative compliance shall contain—

(1) The name, title, address, and telephone number of the primary person to be contacted with regard to the petition;

(2) High-speed core systems and system components of special design shall be deemed to comply with this part, if the FRA Associate Administrator determines under paragraph (d) of this section that the core system or system components provide at least an equivalent level of safety in the environment defined within § 299.13 with respect to the protection of railroad employees and the public. In making a determination under paragraph (d) of this section the Associate Administrator shall consider, as a whole, all of those elements of casualty prevention or mitigation relevant to the integrity of the core system or components that are addressed by the requirements of this part.

(d) *Petition contents.* The Associate Administrator may only make a finding of equivalent safety and compliance with this part, based upon a submission of data and analysis sufficient to support that determination. The petition shall include—

(1) The information required by § 299.15(b) or (c), as appropriate; Information, including detailed drawings and materials specifications, sufficient to describe the actual construction and function of the core systems or system components of special design;

(2) A quantitative risk assessment, incorporating the design information and engineering analysis described in this paragraph, demonstrating that the core systems or system components, as utilized in the service environment defined in § 299.13, presents no greater hazard of serious personal injury than existing core system or system components that conform to the specific requirements of this part.

(e) **Federal Register** notice. FRA will publish a notice in the **Federal Register** concerning each petition under paragraphs (b) and (c) of this section.

(f) *Comment.* Not later than 30 days from the date of publication of the notice in the **Federal Register** concerning a petition under paragraphs (b) and (c) of this section, any person may comment on the petition.

(1) Each comment shall set forth specifically the basis upon which it is made, and contain a concise statement of the interest of the commenter in the proceeding.

(2) Each comment shall be submitted to the U.S. Department of Transportation, Docket Operations (M–30), West Building Ground Floor, Room W12–140, 1200 New Jersey Avenue SE, Washington, DC 20590, and shall contain the assigned docket number for that proceeding. The form of such submission may be in written or electronic form consistent with the standards and requirements established by the Federal Docket Management System and posted on its website at *http://www.regulations.gov.*

(g) *Disposition of petitions.* (1) FRA will conduct a hearing on a petition in accordance with the procedures provided in § 211.25 of this chapter.

(2) If FRA finds that the petition complies with the requirements of this section or that the proposed plan is acceptable the petition will be granted, normally within 90 days of its receipt. If the petition is neither granted nor denied within 90 days, the petition remains pending for decision. FRA may attach special conditions to the approval of the petition. Following the approval of a petition, FRA may reopen consideration of the petition for cause stated.

(3) If FRA finds that the petition does not comply with the requirements of this section, or that the proposed plan is not acceptable or that the proposed changes are not justified, or both, the petition will be denied, normally within 90 days of its receipt.

(4) When FRA grants or denies a petition, or reopens consideration of the petition, written notice is sent to the petitioner and other interested parties.

§ 299.17 Incorporation by reference.

Certain material is incorporated by reference into this part with the approval of the Director of the Federal Register under 5 U.S.C. 552(a) and 1 CFR part 51. All approved material is available for inspection at Federal Railroad Administration, Docket Clerk, 1200 New Jersey Avenue SE, Washington, DC 20590 (telephone: 202–493–6052); email: *FRALegal@dot.gov* and is available from the sources indicated in this section. It is also available for inspection at the National Archives and Records Administration (NARA). For information on the availability of this material at NARA, email *fedreg.legal@nara.gov* or go to *www.archives.gov/federal-register/cfr/ibr-locations.html*.

(a) ASTM International, 100 Barr Harbor Drive, PO Box C700, West Conshohocken, PA 19428–2959, *www.astm.org.*

(1) ASTM D 4956–07 $^{\varepsilon 1}$, Standard Specification for Retroreflective Sheeting for Traffic Control, approved March 15, 2007; into § 299.423.

(2) ASTM E 810–03, Standard Test Method for Coefficient of Retroreflection of Retroreflective Sheeting Utilizing the Coplanar Geometry, approved February 10, 2003; into § 299.423.

(3) ASTM E 2073–07, Standard Test Method for Photopic Luminance of Photoluminescent (Phosphorescent) Markings, approved July 1, 2007; into § 299.423.

(b) Japanese Standards Association 4–1–24, Akasaka, Minato-ku, Tokyo, 107–8440 Japan, *www.jsa.or.jp* (Japanese site), or *www.jsa.or.jp/en* (English site).

(1) JIS E 7105:2006(E), ''Rolling Stock—Test methods of static load for body structures,'' Published February 20, 2006; into § 299.403.

(2) JIS E 7105:2011(E), ''Rolling Stock—Test methods of static load for body structures,'' (Amendment 1) Published September 7, 2011; into § 299.403.

(3) JIS E 1101:2001(E), ''Flat bottom railway rails and special rails for switches and crossings of non-treated steel,'' Published June 30, 2001; into § 299.13.

(4) JIS E 1101:2006(E) ''Flat bottom railway rails and special rails for switches and crossings of non-treated steel,'' (Amendment 1), Published March 25, 2006; into § 299.13.

(5) JIS E 1101:2012(E) ''Flat bottom railway rails and special rails for switches and crossings of non-treated steel,'' (Amendment 2), Published February 20, 2012; into § 299.13.

(6) JIS B 8265 ''Construction of pressure vessels-general principles,'' Published December 27, 2010; into § 299.409.

Subpart B—Signal and Trainset Control System

§ 299.201 Technical PTC system requirements.

(a) The railroad shall comply with all applicable requirements under 49 U.S.C. 20157, including, but not limited to, the statutory requirement to fully implement an FRA-certified PTC system prior to commencing revenue service.

(b) The railroad's PTC system shall be designed to reliably and functionally prevent train-to-train collisions, over-speed derailments, incursions into established work zone limits, and movements of trainset through switches left in the wrong position, in accordance with § 236.1005(a) and (c) through (f) of this chapter.

(c) The railroad is authorized to conduct field testing of its PTC system on its system, prior to obtaining PTC System Certification from FRA, in accordance with its system-wide qualification plan under § 299.603. During any field testing of its uncertified PTC system and regression testing of its FRA-certified PTC system, FRA may oversee the railroad's testing, audit any applicable test plans and procedures, and impose additional testing conditions that FRA believes may be necessary for the safety of trainset operations.

(d) The railroad is not exempted from compliance with any requirement of subparts A through G of 49 CFR part 236, or parts 233, and 235 of this chapter, unless the railroad's FRA-approved PTCSP provides for such an exception.

(e)(1) All materials filed in accordance with this subpart must be in the English language, or have been translated into English and attested as true and correct.

(2) Each filing referenced in this subpart may include a request for full or partial confidentiality in accordance with § 209.11 of this chapter. If confidentiality is requested as to a portion of any applicable document, then in addition to the filing requirements under § 209.11 of this chapter, the person filing the document shall also file a copy of the original unredacted document, marked to indicate which portions are redacted in the document's confidential version without obscuring the original document's contents.

§ 299.203 PTC system required.

The railroad shall not commence revenue service prior to installing and making operative its FRA-certified PTC system.

§ 299.205 PTC System Certification.

(a) Prior to operating its PTC system in revenue service, the railroad must first obtain a PTC System Certification from FRA by submitting an acceptable PTCSP and obtaining FRA's approval of its PTCSP.

(b) Each PTCSP requirement under this subpart shall be supported by information and analysis sufficient to establish that the PTC system meets the requirements of § 236.1005(a) and (c) through (f) of this chapter.

(c) If the Associate Administrator finds that the PTCSP and its supporting documentation support a finding that the PTC system complies with §§ 236.1005(a) and (c) through (f) of this chapter, and 299.211, the Associate Administrator shall approve the PTCSP. If the Associate Administrator approves the PTCSP, the railroad shall receive PTC System Certification for its PTC system and shall implement the PTC system according to the PTCSP.

(d) Issuance of a PTC System Certification is contingent upon FRA's confidence in the implementation and operation of the subject PTC system. This confidence may be based on FRA-monitored field testing or an independent assessment performed in accordance with § 236.1017 of this chapter.

(e)(1) As necessary to ensure safety, FRA may attach special conditions to its certification of the railroad's PTC System.

(2) After granting a PTC System Certification, FRA may reconsider the PTC System Certification upon revelation of any of the following factors concerning the contents of the PTCSP:

(i) Potential error or fraud;

(ii) Potentially invalidated assumptions determined as a result of in-service experience or one or more unsafe events calling into question the safety analysis supporting the approval.

(3) During FRA's reconsideration in accordance with this paragraph, the PTC system may remain in use if otherwise consistent with the applicable law and regulations, and FRA may impose special conditions for use of the PTC system.

(4) After FRA's reconsideration in accordance with this paragraph, FRA may:

(i) Dismiss its reconsideration and continue to recognize the existing PTC System Certification;

(ii) Allow continued operations under such conditions the Associate Administrator deems necessary to ensure safety; or

(iii) Revoke the PTC System Certification and direct the railroad to cease operations.

(f) FRA shall be afforded reasonable access to monitor, test, and inspect processes, procedures, facilities, documents, records, design and testing materials, artifacts, training materials and programs, and any other information used in the design, development, manufacture, test, implementation, and operation of the system, as well as interview any personnel.

(g) Information that has been certified under the auspices of a foreign regulatory entity recognized by the Associate Administrator may, at the Associate Administrator's sole discretion, be accepted as independently verified and validated and used to support the railroad's PTCSP.

(h) The railroad shall file its PTCSP in FRA's Secure Information Repository at *https://sir.fra.dot.gov*, consistent with § 299.201(e).

§ 299.207 PTC Safety Plan content requirements.

(a) The railroad's PTCSP shall contain the following elements:

(1) A hazard log consisting of a comprehensive description of all safety-relevant hazards of the PTC system, specific to implementation on the railroad, including maximum threshold limits for each hazard (for unidentified hazards, the threshold shall be exceeded at one occurrence);

(2) A description of the safety assurance concepts that are to be used for system development, including an explanation of the design principles and assumptions;

(3) A risk assessment of the as-built PTC system;

(4) A hazard mitigation analysis, including a complete and comprehensive description of each hazard and the mitigation techniques used;

(5) A complete description of the safety assessment and Verification and Validation processes applied to the PTC system, their results, and whether these processes address the safety principles described in appendix C to part 236 of this chapter directly, using other safety criteria, or not at all;

(6) A complete description of the railroad's training plan for railroad and contractor employees and supervisors necessary to ensure safe and proper installation, implementation, operation, maintenance, repair, inspection, testing, and modification of the PTC system;

(7) A complete description of the specific procedures and test equipment necessary to ensure the safe and proper installation, implementation, operation, maintenance, repair, inspection, testing, and modification of the PTC system on the railroad and establish safety-critical hazards are appropriately mitigated. These procedures, including calibration requirements, shall be consistent with or explain deviations from the equipment manufacturer's recommendations;

(8) A complete description of the configuration or revision control measures designed to ensure that the railroad or its contractor does not adversely affect the safety-functional requirements and that safety-critical hazard mitigation processes are not compromised as a result of any such change;

(9) A complete description of all initial implementation testing procedures necessary to establish that safety-functional requirements are met and safety-critical hazards are appropriately mitigated;

(10) A complete description of all post-implementation testing (validation) and monitoring procedures, including the intervals necessary to establish that safety-functional requirements, safety-critical hazard mitigation processes, and safety-critical tolerances are not compromised over time, through use, or after maintenance (adjustment, repair, or replacement) is performed;

(11) A complete description of each record necessary to ensure the safety of the system that is associated with periodic maintenance, inspections, tests, adjustments, repairs, or replacements, and the system's resulting conditions, including records of component failures resulting in safety-relevant hazards (*see* § 299.213);

(12) A safety analysis to determine whether, when the system is in operation, any risk remains of an unintended incursion into a roadway work zone due to human error. If the analysis reveals any such risk, the PTCSP shall describe how that risk will be mitigated;

(13) A complete description of how the PTC system will enforce authorities and signal indications;

(14) A complete description of how the PTC system will appropriately and timely enforce all integrated hazard detectors in accordance with § 236.1005 of this chapter;

(15) The documents and information required under § 299.211;

(16) A summary of the process for the product supplier or vendor to promptly and thoroughly report any safety-relevant failures or previously unidentified hazards to the railroad, including when another user of the product experiences a safety-relevant failure or discovers a previously unidentified hazard;

(17) Documentation establishing—by design, data, or other analysis—that the PTC system meets the fail-safe operation criteria under paragraph (b)(4)(v) of appendix C to part 236 of this chapter; and,

(18) An analysis establishing that the PTC system will be operated at a level of safety comparable to that achieved over the 5-year period prior to the submission of the railroad's PTCSP by other train control systems that perform PTC functions, and which have been utilized on high-speed rail systems with similar technical and operational characteristics in the United States or in foreign service.

(b) As the railroad's PTC system may be considered a stand-alone system pursuant to § 236.1015(e)(3) of this chapter, the following requirements apply:

(1) The PTC system shall reliably execute the functions required by § 236.1005 of this chapter and be demonstrated to do so to FRA's satisfaction; and

(2) The railroad's PTCSP shall establish, with a high degree of confidence, that the system will not introduce any hazards that have not been sufficiently mitigated.

(c) When determining whether the PTCSP fulfills the requirements under this section, the Associate Administrator may consider all available evidence concerning the reliability of the proposed system.

(d) When reviewing the issue of the potential data errors (for example, errors arising from data supplied from other business systems needed to execute the braking algorithm, survey data needed for location determination, or mandatory directives issued through the computer-aided dispatching system), the PTCSP must include a careful identification of each of the risks and a discussion of each applicable mitigation. In an appropriate case, such as a case in which the residual risk after mitigation is substantial, the Associate Administrator may require submission of a quantitative risk assessment addressing these potential errors.

(e) The railroad must comply with the applicable requirements under § 236.1021 of this chapter prior to modifying a safety-critical element of an FRA-certified PTC system.

(f) If a PTCSP applies to a PTC system designed to replace an existing certified

PTC system, the PTCSP will be approved provided that the PTCSP establishes with a high degree of confidence that the new PTC system will provide a level of safety not less than the level of safety provided by the system to be replaced.

§ 299.209 PTC system use and failures.

(a) When any safety-critical PTC system component fails to perform its intended function, the cause must be determined and the faulty component adjusted, repaired, or replaced without undue delay. Until repair of such essential components is completed, the railroad shall take appropriate action as specified in its PTCSP.

(b) Where a trainset that is operating in, or is to be operated within, a PTC-equipped track segment experiences a PTC system failure or the PTC system is otherwise cut out while en route (*i.e.,* after the trainset has departed its initial terminal), the trainset may only continue in accordance with all of the following:

(1) Except as provided in paragraph (b)(4) of this section, when no absolute block protection is established, the trainset may proceed at a speed not to exceed restricted speed.

(2) When absolute block protection can be established in advance of the trainset, the trainset may proceed at a speed not to exceed 120 km/h (75 mph), and the trainset shall not exceed restricted speed until the absolute block in advance of the trainset is established.

(3) A report of the failure or cut-out must be made to a designated railroad officer of the railroad as soon as safe and practicable.

(4) Where the PTC system is the exclusive method of delivering mandatory directives, an absolute block must be established in advance of the trainset as soon as safe and practicable, and the trainset shall not exceed restricted speed until the absolute block in advance of the trainset is established.

(5) Where the failure or cut-out is a result of a defective onboard PTC apparatus, the trainset may be moved in passenger service only to the next forward location where the necessary repairs can be made; however, if the next forward location where the necessary repairs can be made does not have the facilities to handle the safe unloading of passengers, the trainset may be moved past the repair location in service only to the next forward passenger station in order to facilitate the unloading of passengers. When the passengers have been safely unloaded, the defective trainset shall be moved to the nearest location where the onboard PTC apparatus can be repaired or exchanged.

(c) The railroad shall comply with all provisions in its PTCSP for each PTC system it uses and shall operate within the scope of initial operational assumptions and predefined changes identified.

(d) The normal functioning of any safety-critical PTC system must not be interfered with in testing or otherwise without first taking measures to provide for the safe movement of trainsets that depend on the normal functioning of the system.

(e) Annually, by April 16 of each year following the commencement of the railroad's revenue service, the railroad shall provide FRA with a report of the number of PTC failures that occurred during the previous calendar year. The report shall identify failures by category, including but not limited to locomotive, wayside, communications, and back office system failures.

(f) The railroad and the PTC system vendors and/or suppliers must comply with each applicable requirement under § 236.1023 of this chapter.

§ 299.211 Communications and security requirements.

(a) All wireless communications between the office, wayside, and onboard components in a PTC system shall provide cryptographic message integrity and authentication.

(b) Cryptographic keys required under this section shall—

(1) Use an algorithm approved by the National Institute of Standards or a similarly recognized and FRA-approved standards body;

(2) Be distributed using manual or automated methods, or a combination of both; and

(3) Be revoked—

(i) If compromised by unauthorized disclosure of the cleartext key; or

(ii) When the key algorithm reaches its lifespan as defined by the standards body responsible for approval of the algorithm.

(c) The cleartext form of the cryptographic keys shall be protected from unauthorized disclosure, modification, or substitution, except during key entry when the cleartext keys and key components may be temporarily displayed to allow visual verification. When encrypted keys or key components are entered, the cryptographically protected cleartext key or key components shall not be displayed.

(d) Access to cleartext keys shall be protected by a tamper-resistant mechanism.

(e) If the railroad elects to also provide cryptographic message confidentiality, it shall:

(1) Comply with the same requirements for message integrity and authentication under this section; and

(2) Only use keys meeting or exceeding the security strength required to protect the data as defined in the railroad's PTCSP.

(f) The railroad, or its vendor or supplier, shall have a prioritized service restoration and mitigation plan for scheduled and unscheduled interruptions of service. This plan shall be made available to FRA upon request, without undue delay, for restoration of communication services that support PTC system services.

§ 299.213 Records retention.

(a) The railroad shall maintain at a designated office on the railroad—

(1) A current copy of each FRA-approved PTCSP that it holds;

(2) Adequate documentation to demonstrate that the PTCSP meets the safety requirements of this RPA, including the risk assessment;

(3) An Operations and Maintenance Manual, pursuant to § 299.215; and

(4) Training and testing records pursuant to § 236.1043(b) of this chapter.

(b) Results of inspections and tests specified in the PTCSP must be recorded pursuant to § 236.110 of this chapter.

(c) Each contractor providing services relating to the testing, maintenance, or operation of the railroad's PTC system shall maintain at a designated office training records required under §§ 236.1043(b) of this chapter, and 299.207(a)(6).

(d) After the PTC system is placed in service, the railroad shall maintain a database of all safety-relevant hazards as set forth in its PTCSP and those that had not been previously identified in its PTCSP. If the frequency of the safety-relevant hazards exceeds the threshold set forth in its PTCSP, then the railroad shall—

(1) Report the inconsistency in writing to FRA's Secure Information Repository at *https://sir.fra.dot.gov*, within 15 days of discovery;

(2) Take prompt countermeasures to reduce the frequency of each safety-relevant hazard to below the threshold set forth in its PTCSP; and

(3) Provide a final report when the inconsistency is resolved to FRA's Secure Information Repository at *https://sir.fra.dot.gov*, on the results of the analysis and countermeasures taken to reduce the frequency of the safety-relevant hazard(s) below the threshold set forth in its PTCSP.

§ 299.215 Operations and Maintenance Manual.

(a) The railroad shall catalog and maintain all documents as specified in its PTCSP for the operation, installation, maintenance, repair, modification, inspection, and testing of the PTC system and have them in one Operations and Maintenance Manual, readily available to persons required to perform such tasks and for inspection by FRA and FRA-certified state inspectors.

(b) Plans required for proper maintenance, repair, inspection, and testing of safety-critical PTC systems must be adequate in detail and must be made available for inspection by FRA and FRA-certified state inspectors where such PTC systems are deployed or maintained. They must identify all software versions, revisions, and revision dates. Plans must be legible and correct.

(c) Hardware, software, and firmware revisions must be documented in the Operations and Maintenance Manual according to the railroad's configuration management control plan and any additional configuration/revision control measures specified in its PTCSP.

(d) Safety-critical components, including spare equipment, must be positively identified, handled, replaced, and repaired in accordance with the procedures specified in the railroad's PTCSP.

(e) The railroad shall designate in its Operations and Maintenance Manual an appropriate railroad officer responsible for issues relating to scheduled interruptions of service.

Subpart C—Track Safety Standards

§ 299.301 Restoration or renewal of track under traffic conditions.

(a) Restoration or renewal of track, other than in yards and trainset maintenance facilities, under traffic conditions is prohibited.

(b) Restoration or renewal of track under traffic conditions on track Class H2 in yards and trainset maintenance facilities is limited to the replacement of worn, broken, or missing components or fastenings that do not affect the safe passage of trainset.

(c) The following activities are expressly prohibited on track Class H2 trainset maintenance facilities under traffic conditions:

(1) Any work that interrupts rail continuity, *e.g.,* as in joint bar replacement or rail replacement;

(2) Any work that adversely affects the lateral or vertical stability of the track with the exception of spot tamping an isolated condition where not more than 4.5 m (15 feet) of track are involved at any one time and the ambient air temperature is not above 35 C (95 F); and

(3) Removal and replacement of the rail fastenings on more than one tie at a time within 4.5 m (15 feet).

§ 299.303 Measuring track not under load.

When unloaded track is measured to determine compliance with requirements of this part, evidence of rail movement, if any, that occurs while the track is loaded shall be added to the measurements of the unloaded track.

§ 299.305 Drainage.

Each drainage or other water carrying facility under or immediately adjacent to the roadbed shall be maintained and kept free of obstruction, to accommodate expected water flow for the area concerned.

§ 299.307 Vegetation.

Vegetation on railroad property which is on or immediately adjacent to roadbed shall be controlled so that it does not—

(a) Become a fire hazard to track-carrying structures;

(b) Obstruct visibility of railroad signs and signals along the right-of-way;

(c) Interfere with railroad employees performing normal trackside duties;

(d) Prevent proper functioning of signal and communication lines.

(e) Prevent railroad employees from visually inspecting moving equipment from their normal duty stations.

§ 299.309 Classes of track: operating speed limits.

(a) Except as provided in paragraph (b) of this section and as otherwise provided in this part, the following maximum allowable operating speeds apply—

TABLE 1 TO PARAGRAPH (a)

Over track that meets all of the requirements prescribed in this part for—	The maximum allowable operating speed in km/h (mph)
Class H0 track	20 (12)
Class H1 track	30 (19)
Class H2 track	70 (44)
Class H3 track	120 (75)
Class H4 track	170 (106)
Class H5 track	230 (143)
Class H6 track	285 (177)
Class H7 track	330 (205)

(b) Except as provided in paragraph (c) of this section, if a segment of track does not meet all of the requirements for its intended Class, it is to be reclassified to the next lower track Class for which it does meet all of the requirements of this part. However, if the segment of track does not at least meet the requirements for track Class H1 track, operations may continue at Class H1 speeds for a period of not more than 30 days without bringing the track into compliance, under the authority of an individual designated under § 299.353, after that individual determines that operations may safely continue and subject to any limiting conditions specified by such individual.

(c) If a segment of track designated as track Class H0 does not meet all of the requirements for its intended class, operations may continue at Class H0 speeds for a period of not more than 30 days without bringing the track into compliance, under the authority of an individual designated under § 299.353, after that individual determines that operations may safely continue and subject to any limiting conditions specified by such individual.

(d) No high-speed passenger trainset shall operate over track Class H0.

§ 299.311 Track geometry; general.

If the values listed in the following table are exceeded, the railroad shall initiate remedial action. A reduction in operating speed so that the condition complies with the limits listed for a lower speed shall constitute bringing the track into compliance.

TABLE 1 TO § 299.311

Track geometry parameter (mm)	Track class	H0	H1	H2	H3	H4	H5	H6	H7
Gauge is measured between the heads of the rails at right angles to the rails in a plane 14 mm (0.55 inches) below the top of the rail head and may not exceed—.	Min	1429	1429	1429	1429	1429	1429	1429	1429
	Max	1454	1454	1454	1454	1454	1454	1454	1454

TABLE 1 TO § 299.311—Continued

Track geometry parameter (mm)	Track class	H0	H1	H2	H3	H4	H5	H6	H7
The deviation from uniformity [1] of the mid-chord offset on either rail for a 10 m chord (alignment) may not be more than—.	10 m chord	38	31	31	14	12	10	8	7
The deviation from uniform profile on either rail at the mid-ordinate of a 10 m chord (surface) may not be more than—.	10 m chord	40	40	40	27	22	18	15	13
The deviation from uniform crosslevel at any point on tangent and curved track may not be more than—.	.....	50	26	26	22	18	14	9	9
The difference in crosslevel between any two points 2.5 meters (8.2 feet) apart (twist) may not be more than—.	2.5 m	26	26	26	22	18	14	9	9

[1] Uniformity for alignment at any point along the track is established by averaging the measured mid-chord offset values for a 10 m (32.8 feet) chord for nine consecutive points that are centered around that point and spaced at 2.5-meter (8.2 feet) intervals.

§ 299.313 Track geometry; performance based.

(a) For all track of Class H4 and above, vibration in the lateral and vertical directions measured on the carbody of a vehicle representative of the service fleet traveling at a speed no less than 10 km/h (6.2 mph) below the maximum speed permitted for the class of track, shall not exceed the limits prescribed in the following table:

TABLE 1 TO PARAGRAPH (A)

Carbody acceleration limits [1] [2]	
Lateral vibration [3]	Vertical vibration [3]
≤0.35 g peak-to-peak 1 sec window ..... excluding peaks <50 msec.	≤0.45 g peak-to-peak. 1 sec window. excluding peaks <50 msec.

[1] Carbody accelerations in the vertical and lateral directions shall be measured by accelerometers oriented and located in accordance with § 299.331(c)(3).

[2] Acceleration measurements shall be processed through an LPF with a minimum cut-off frequency of 10 Hz. The sample rate for acceleration data shall be at least 200 samples per second.

[3] Peak-to-peak accelerations shall be measured as the algebraic difference between the two extreme values of measured acceleration in any 1-second time period, excluding any peak lasting less than 50 milliseconds.

(b) If the carbody acceleration requirements are not met on a segment of track, the segment of track is to be reclassified to the next lower Class of track for which it does meet the requirements of this part.

§ 299.315 Curves; elevation and speed limitations.

(a) The maximum elevation of the outside rail of a curve may not be more than 200 mm (7⅞ inches). The outside rail of a curve may not be lower than the inside rail by design, except when engineered to address specific track or operating conditions; the limits in § 299.311 apply in all cases.

(b) The maximum allowable posted timetable operating speed for each curve is determined by the following formula:

$$V_{\max} = \sqrt{\frac{(E_a + E_u)xR}{11.8}}$$

Where—

V_{max} = Maximum allowable posted timetable operating speed (km/h).

E_a = Actual elevation of the outside rail (mm). Actual elevation, E_a, for each 50-meter track segment in the body of the curve is determined by averaging the elevation for 11 points through the segment at 5-meter spacing. If the curve length is less than 50-meters, average the points through the full length of the body of the curve.

E_u = Qualified cant deficiency (mm) of the vehicle type.

R = Radius of curve (m). Radius of curve, R, is determined by averaging the radius of the curve over the same track segment as the elevation.

(c) All vehicles are considered qualified for operating on track with a cant deficiency, E_u, not exceeding 75 mm (3 inches).

(d) Each vehicle type must be approved by FRA, under § 299.609, to operate on track with a qualified cant deficiency, E_u, greater than 75 mm (3 inches). Each vehicle type must demonstrate in a ready-for-service load condition, compliance with the requirements of either paragraph (d)(1) or (2) of this section.

(1) When positioned on a track with a uniform superelevation equal to the proposed cant deficiency:

(i) No wheel of the vehicle unloads to a value less than 60 percent of its static value on perfectly level track; and

(ii) For passenger cars, the roll angle between the floor of the equipment and the horizontal does not exceed 8.6 degrees; or

(2) When operating through a constant radius curve at a constant speed corresponding to the proposed cant deficiency, and a test plan is submitted and approved by FRA in accordance with § 299.609(d)—

(i) The steady-state (average) load on any wheel, throughout the body of the curve, is not less than 60 percent of its static value on perfectly level track; and

(ii) For passenger cars, the steady-state (average) lateral acceleration measured on the floor of the carbody does not exceed 0.15 g.

(e) The railroad shall transmit the results of the testing specified in paragraph (d) of this section to FRA in accordance with §§ 299.9 and 299.613 requesting approval under § 299.609(g) for the vehicle type to operate at the desired curving speeds allowed under the formula in paragraph (b) of this section. The request shall be made in writing and shall contain, at a minimum, the following information:

(1) A description of the vehicle type involved, including schematic diagrams of the suspension system(s) and the estimated location of the center of gravity above top of rail; and

(2) The test procedure, including the load condition under which the testing was performed, and description of the instrumentation used to qualify the vehicle type, as well as the maximum values for wheel unloading and roll angles or accelerations that were observed during testing.

Note 1 to paragraph (e)(2). The test procedure may be conducted whereby all the wheels on one side (right or left) of the vehicle are raised to the proposed cant deficiency and lowered, and then the vertical wheel loads under each wheel are measured and a level is used to record the angle through which the floor of the vehicle has been rotated.

(f) Upon FRA approval of the request to approve the vehicle type to operate at

the desired curving speeds allowed under the formula in paragraph (b) of this section, the railroad shall notify FRA in accordance with § 299.9 in writing no less than 30 calendar days prior to the proposed implementation of the approved higher curving speeds allowed under the formula in paragraph (b) of this section. The notification shall contain, at a minimum, identification of the track segment(s) on which the higher curving speeds are to be implemented.

(g) As used in this section, and §§ 299.331 and 299.609, vehicle type means like vehicles with variations in their physical properties, such as suspension, mass, interior arrangements, and dimensions that do not result in significant changes to their dynamic characteristics.

§ 299.317 Track strength.

(a) Track shall have a sufficient vertical strength to withstand the maximum vehicle loads generated at maximum permissible trainset speeds, cant deficiencies and surface limitations. For purposes of this section, vertical track strength is defined as the track capacity to constrain vertical deformations so that the track shall, under maximum load, remain in compliance with the track performance and geometry requirements of this part.

(b) Track shall have sufficient lateral strength to withstand the maximum thermal and vehicle loads generated at maximum permissible trainset speeds, cant deficiencies and lateral alignment limitations. For purposes of this section lateral track strength is defined as the track capacity to constrain lateral deformations so that track shall, under maximum load, remain in compliance with the track performance and geometry requirements of this part.

§ 299.319 Track fixation and support.

(a) Crossties, if used shall be of concrete or composite construction, unless otherwise approved by FRA under § 299.15, for all tracks over which trainsets run in revenue service.

(b) Each 25 m (82 feet) segment of track that contains crossties shall have—

(1) A sufficient number of crossties to provide effective support that will—

(i) Hold gauge within limits prescribed in § 299.311;

(ii) Maintain surface within the limits prescribed in § 299.311;

(iii) Maintain alignment within the limits prescribed in § 299.311; and

(iv) Maintain longitudinal rail restraint.

(2) The minimum number and type of crossties specified in paragraph (b)(4) of this section and described in paragraph (c) or (d) of this section, as applicable, effectively distributed to support the entire segment;

(3) At least one non-defective crosstie of the type specified in paragraphs (c) and (d) of this section that is located at a joint location as specified in paragraph (e) of this section; and

(4) The minimum number of crossties as indicated in the following table:

TABLE 1 TO PARAGRAPH (b)(4)

Minimum number of non-defective crossties			
Track class	Other than on non-ballasted bridge & turnout	Non-ballasted bridge	Turnout
H0	20	26	24
H1	28	36	33
H2	31, unless inside a TMF, then 28	36	33
H3	35	40	37
H4–H7	39	45	41

(c) Crossties, other than concrete, counted to satisfy the requirements set forth in paragraph (b)(4) of this section shall not be—

(1) Broken through;

(2) Split or otherwise impaired to the extent the crossties will allow the ballast to work through, or will not hold spikes or rail fasteners;

(3) Deteriorated so that the tie plate or base of rail can move laterally 9.5 mm (38 inch) relative to the crossties;

(4) Cut by the tie plate through more than 40 percent of a crosstie's thickness;

(5) Configured with less than 2 rail holding spikes or fasteners per tie plate; or

(6) Unable, due to insufficient fastener toeload, to maintain longitudinal restraint and maintain rail hold down and gauge.

(d) Concrete crossties counted to satisfy the requirements set forth in paragraph (b)(4) of this section shall not be—

(1) Broken through or deteriorated to the extent that prestressing material is visible;

(2) Deteriorated or broken off in the vicinity of the shoulder or insert so that the fastener assembly can either pull out or move laterally more than 9.5 mm (3/8 inch) relative to the crosstie;

(3) Deteriorated such that the base of either rail can move laterally more than 9.5 mm (3/8 inch) relative to the crosstie;

(4) Deteriorated so that rail seat abrasion is sufficiently deep so as to cause loss of rail fastener toeload;

(5) Deteriorated such that the crosstie's fastening or anchoring system is unable to maintain longitudinal rail restraint, or maintain rail hold down, or maintain gauge due to insufficient fastener toeload; or

(6) Configured with less than two fasteners on the same rail.

(e) Classes H0 and H1 track shall have one crosstie whose centerline is within 0.61 m (24 inches) of each rail joint (end) location. Classes H2 and H3 track shall have one crosstie whose centerline is within 0.46 m (18 inches) of each rail joint (end) location. Classes H4–H7 track shall have one crosstie whose centerline is within 0.32 m (12.6 inches) of each rail joint (end) location. The relative position of these crossties is described in the following three diagrams:

(1) Each rail joint in Classes H0 and H1 track shall be supported by at least one crosstie specified in paragraphs (d) and (e) of this section whose centerline is within 1.22 m (48 inches) as shown in Figure 1 to this paragraph.

Figure 1 to paragraph (e)(1) - Classes H0 and H1

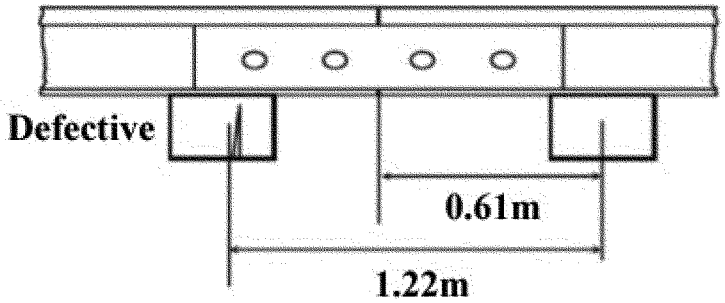

(2) Each rail joint in Classes H2 and H3 track shall be supported by at least one crosstie specified in paragraphs (c) and (d) of this section whose centerline is within 0.92 m (36.2 inches) as shown in Figure 2 to this paragraph.

Figure 2 to paragraph (e)(2) - Classes H2 and H3

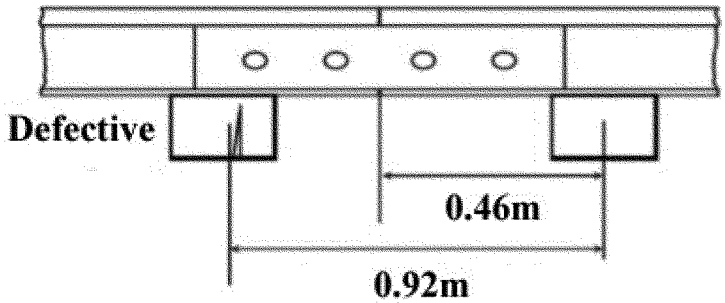

(3) Each rail joint in Classes H4–H7 track shall be supported by at least one crosstie specified in paragraphs (c) and (d) of this section whose centerline is within 0.64 m (25.2 inches) as shown in Figure 3 to this paragraph.

Figure 3 to paragraph (e)(3) - Classes H4 - H7

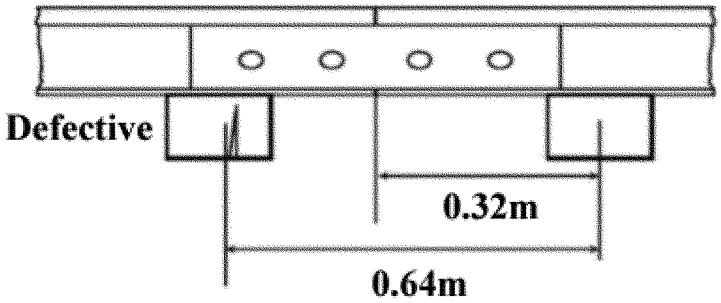

(f) In Class H3 track there shall be at least two non-defective ties each side of a defective tie.

(g) In Classes H4 to H7 track and at any expansion joints there shall be at least three non-defective ties each side of a defective tie.

(h) Defective ties shall be replaced in accordance with the railroad's inspection, testing, and maintenance program.

(i) Track shall be fastened by a system of components that effectively maintains gauge within the limits prescribed in § 299.311. Each component of each such system shall be evaluated to determine whether gauge is effectively being maintained.

(j) For track constructed without crossties, such as slab track and track connected directly to bridge structural components, track over servicing pits, etc., the track structure shall be sufficient to maintain the geometry limits specified in § 299.311.

§ 299.321 Defective rails.

(a) The railroad's inspection, testing, and maintenance program shall include a description of defective rails consistent with the practice on the Tokaido Shinkansen system. The inspection, testing, and maintenance program shall include identification of rail defect types, definition of the inspection criteria, time required for verification and the corresponding remedial action.

(b) When the railroad learns that a rail in that track contains any of the defects listed in the railroad's inspection, testing, and maintenance program, a person designated under § 299.353 or 299.355 shall determine whether the track may continue in use. If the designated person determines that the track may continue in use, operation over the defective rail is not permitted until—

(1) The rail is replaced or repaired; or

(2) The remedial action prescribed in the inspection, testing, and maintenance program is initiated.

§ 299.323 Continuous welded rail (CWR) plan.

(a) The railroad shall have in effect and comply with a plan that contains written procedures which address: The installation, adjustment, maintenance, and inspection of CWR; and inspection of CWR joints.

(b) The railroad shall file its CWR plan with FRA pursuant to § 299.9. The initial CWR plan shall be filed 60 days prior to installation of any CWR track. The effective date of the plan is the date the plan is filed with FRA.

(c) The railroad's existing plan shall remain in effect until the railroad's new plan is developed and filed with FRA.

§ 299.325 Continuous welded rail (CWR); general.

The railroad shall comply with the contents of the CWR plan developed under § 299.323. The plan shall contain the following elements—

(a) Procedures for the installation and adjustment of CWR which include—

(1) Designation of a desired rail installation temperature range for the geographic area in which the CWR is located;

(2) De-stressing procedures/methods which address proper attainment of the desired rail installation temperature range when adjusting CWR; and

(3) Glued insulated or expansion joint installation and maintenance procedures.

(b) Rail anchoring, if used, or fastening requirements that will provide sufficient restraint to limit longitudinal rail and crosstie movement to the extent practical, and that specifically address CWR rail anchoring or fastening patterns on bridges, bridge approaches, and at other locations where possible longitudinal rail and crosstie movement associated with normally expected trainset-induced forces—is restricted.

(c) CWR joint installation and maintenance procedures.

(d) Procedures which specifically address maintaining a desired rail installation temperature range when cutting CWR including rail repairs, in-track welding, and in conjunction with adjustments made in the area of tight track, a track buckle, or a pull-apart.

(e) Procedures which control trainset speed on CWR track when—

(1) Maintenance work, track rehabilitation, track construction, or any other event occurs which disturbs the roadbed or ballast section and reduces the lateral or longitudinal resistance of the track; and

(2) The difference between the rail temperature and the rail neutral temperature is in a range that causes buckling-prone conditions to be present at a specific location.

(f) Procedures which prescribe when and where physical track inspections are to be performed under extreme temperature conditions.

(g) Scheduling and procedures for inspections to detect cracks and other indications of potential failures in CWR joints.

(h) The railroad shall have in effect a comprehensive training program for the application of these written CWR procedures, with provisions for periodic retraining for those individuals designated as qualified in accordance with this subpart to supervise the installation, adjustment, and maintenance of CWR track and to perform inspections of CWR track.

(i) The plan shall prescribe and require compliance with recordkeeping requirements necessary to provide an adequate history of track constructed with CWR. At a minimum, these records shall include—

(1) The rail laying temperature, location, and date of CWR installations. Each record shall be retained until the rail neutral temperature has been adjusted; and

(2) A record of any CWR installation or maintenance work that does not conform to the written procedures. Such record must include the location of the rail and be maintained until the CWR is brought into conformance with such procedures.

§ 299.327 Rail end mismatch.

Any mismatch of rails at joints may not be more than that prescribed by the following table:

TABLE 1 TO § 299.327

Track class	Any mismatch of rails at joints may not be more than the following:	
	On the tread of the rail ends	On the gauge side of the rail ends
H0	6 mm	5 mm
H1–H2	4 mm	4 mm
H3–H7	2 mm	2 mm

§ 299.329 Rail joints and torch cut rails.

(a) Each rail joint, insulated joint, expansion joint, and compromise joint shall be of a structurally sound design and appropriate dimensions for the rail on which it is applied.

(b) If a joint bar is cracked, broken, or permits excessive vertical movement of either rail when all bolts are tight, it shall be replaced.

(c) Except for glued-insulated joints, each joint bar shall be held in position by track bolts tightened to allow the joint bar to firmly support the abutting rail ends. For track Classes H0 to H3 track bolts shall be tightened, as required, to allow longitudinal movement of the rail in the joint to accommodate expansion and contraction due to temperature variations.

(d) Except as provided in paragraph (e) of this section, each rail shall be bolted with at least two bolts at each joint.

(e) Clamped joint bars may be used for temporary repair during emergency situations, and speed over that rail end and the time required to replace the joint bar must not exceed the limits specified in the inspection, testing, and maintenance program.

(f) No rail shall have a bolt hole which is torch cut or burned.

(g) No joint bar shall be reconfigured by torch cutting.

(h) No rail having a torch cut or flame cut end may be used.

§ 299.331 Turnouts and crossings generally.

(a) In turnouts and track crossings, the fastenings shall be intact and

maintained to keep the components securely in place. Also, each switch, frog, and guard rail shall be kept free of obstructions that may interfere with the passage of wheels. Use of rigid rail crossings at grade is limited to track Classes H0, H1, and H2.

(b) The track through and on each side of track crossings and turnouts shall be designed to restrain rail movement affecting the position of switch points and frogs.

(c) Each flangeway at turnouts shall be at least 39 mm (1.5 inches) wide.

(d) For all turnouts and track crossings, the railroad shall prepare inspection and maintenance requirements to be included in the railroad's inspection, testing, and maintenance program.

§ 299.333 Frog guard rails and guard faces; gauge.

The guard check and guard face gauges in frogs shall be within the limits prescribed in the following table:

TABLE 1 TO § 299.333

Track class	*Guard check gauge* The distance between the gauge line of a frog to the guard line [1] of its guard rail or guarding face, measured across the track at right angles to the gauge line,[2] may not be less than—	*Guard face gauge* The distance between the guard lines,[1] measured across the track at right angles to the gauge line,[2] may not be more than—
H0–H7	1393 mm	1358 mm

[1] A line along that side of the flangeway which is nearer to the center of the track and at the same elevation as the gauge line.
[2] A line 14 mm (0.55 inches) below the top of the center line of the head of the running rail, or corresponding location of the tread portion of the track structure.

Figure 4 to § 299.333 – Guard Check and Guard Face Gage Measurement (Top View)

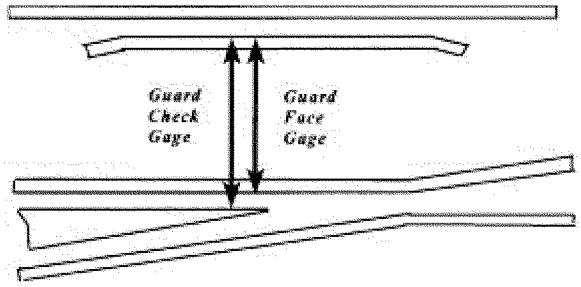

Figure 5 to § 299.333 – Guard Check and Guard Face Gage Measurement (In line with rail view)

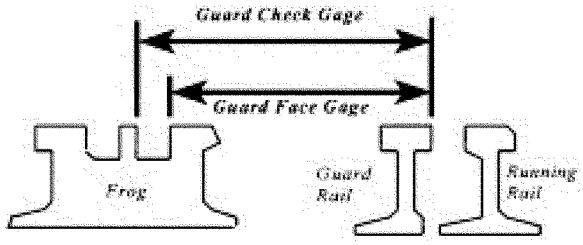

§ 299.335 Derails.

(a) Derails shall be installed at locations where maintenance-of-way equipment can access track other than Class H0, in a configuration intended to derail the un-controlled equipment away from the mainline and at a distance from the point of intersection with the mainline that will not foul the dynamic envelope of the mainline.

(b) Each derail shall be clearly visible to railroad personnel operating rail equipment on the affected track and to railroad personnel working adjacent to the affected track. When in a locked position, a derail shall be free of any lost motion that would allow it to be operated without removal of the lock.

(c) Each derail shall be maintained and function as intended.

(d) Each derail shall be properly installed for the rail to which it is applied.

(e) If a track is equipped with a derail it shall be in the derailing position except as provided in the railroad's operating rules, special instructions, or changed to permit movement.

§ 299.337 Automated vehicle-based inspection systems.

(a) A qualifying Track Geometry Measurement System (TGMS) and a qualifying Track Acceleration Measurement System (TAMS) shall be operated over the route at the following frequency:

(1) For track Class H3, at least twice per calendar year with not less than 120 days between inspections; and

(2) For track Classes H4, H5, H6, and H7, at least twice within any 60-day period with not less than 12 days between inspections.

(b) The qualifying TGMS shall meet or exceed minimum design requirements which specify that—

(1) Track geometry measurements shall be taken no more than 1 meter (3.3 feet) away from the contact point of wheels carrying a vertical load of no less than 4,500 kg (10,000 lb) per wheel;

(2) Track geometry measurements shall be taken and recorded on a distance-based sampling interval not exceeding 0.60 m (2 feet), preferably 0.30 m (1 foot);

(3) Calibration procedures and parameters are assigned to the system which assures that measured and recorded values accurately represent track conditions. Track geometry measurements recorded by the system shall not differ on repeated runs at the same site at the same speed more than 3 mm (⅛ inch); and

(4) The TGMS shall be capable of measuring and processing the necessary track geometry parameters to determine compliance with §§ 299.311 and 299.315.

(5) A qualifying TAMS shall be on a vehicle having dynamic response characteristics that are representative of other vehicles assigned to the service and shall—

(i) Be operated at the revenue speed profile in accordance with § 299.309;

(ii) Be capable of measuring and processing carbody acceleration parameters to determine compliance with Carbody Acceleration Limits per § 299.313; and

(iii) Monitor lateral and vertical accelerations of the carbody. The accelerometers shall be attached to the carbody on or under the floor of the vehicle, as near the center of a bogie as practicable.

(d) The qualifying TGMS and TAMS shall be capable of producing, within 24 hours of the inspection, output reports that—

(1) Provide a continuous plot, on a constant-distance axis, of all measured track geometry and carbody acceleration parameters required in paragraph (b) and (c) of this section;

(2) Provide an exception report containing a systematic listing of all track geometry and all acceleration conditions which constitute an exception to the class of track over the segment surveyed.

(e) The output reports required under paragraph (d) of this section shall contain sufficient location identification information which enables field personnel to easily locate indicated exceptions.

(f) Following a track inspection performed by a qualifying TGMS or TAMS, the railroad shall, institute remedial action for all exceptions to the class of track in accordance with the railroad's inspection, testing, and maintenance program.

(g) The railroad shall maintain for a period of one year following an inspection performed by a qualifying TGMS and TAMS, a copy of the plot and the exception report for the track segment involved, and additional records which—

(1) Specify the date the inspection was made and the track segment involved; and,

(2) Specify the location, remedial action taken, and the date thereof, for all listed exceptions to the class.

§ 299.339 Daily sweeper inspection.

A sweeper vehicle shall be operated each morning after the overnight maintenance over all tracks except track Class H2 in stations, prior to commencing revenue service over that track. The sweeper vehicle shall operate at a speed no greater than 120 km/h (75 mph) to conduct a visual inspection to ensure the right-of-way is clear of obstacles within the clearance envelope and to identify conditions that could cause accidents, and shall have a minimum clearance of no less than 35 mm above top of rail.

§ 299.341 Inspection of rail in service.

(a) Prior to revenue service the railroad shall submit written procedures for the inspection of rails in accordance with the inspection, testing, and maintenance program.

(b) On track Classes H4 to H7, and H2 within stations, a continuous search for internal defects shall be made of all rail within 180 days after initiation of revenue service and, thereafter, at least annually, with not less than 240 days between inspections.

(c) Each defective rail shall be marked with a highly visible marking on both sides of the rail.

(d) Inspection equipment shall be capable of detecting defects between joint bars and within the area enclosed by joint bars.

(e) If the person assigned to operate the rail defect detection equipment being used determines that, due to rail surface conditions, a valid search for internal defects could not be made over a particular length of track, the test on that particular length of track cannot be considered as a search for internal defects under this section.

(f) When the railroad learns, through inspection or otherwise, that a rail in that track contains any of the defects in accordance with § 299.321, a qualified individual designated under § 299.353 or 299.355 shall determine whether or not the track may continue in use. If the qualified individual so designated determines that the track may continue in use, operation over the defective rail is not permitted until—

(1) The rail is replaced; or

(2) The remedial action as prescribed in § 299.321 has been taken.

(g) The person assigned to operate the rail defect detection equipment must be a qualified operator as defined in this subpart and have demonstrated proficiency in the rail flaw detection process for each type of equipment the operator is assigned.

§ 299.343 Initial inspection of new rail and welds.

(a) The railroad shall provide for the initial inspection of newly manufactured rail, and for initial inspection of new welds made in either new or used rail. The railroad may demonstrate compliance with this section by providing for—

(1) *Mill inspection.* A continuous inspection at the rail manufacturer's mill shall constitute compliance with the requirement for initial inspection of new rail, provided that the inspection equipment meets the applicable requirements as specified under the railroads inspection testing and maintenance program and § 299.321. The railroad shall obtain a copy of the manufacturer's report of inspection and retain it as a record until the rail receives its first scheduled inspection under § 299.341;

(2) *Welding plant inspection.* A continuous inspection at a welding plant, if conducted in accordance with the provisions of paragraph (a)(1) of this section, and accompanied by a plant operator's report of inspection which is retained as a record by the railroad, shall constitute compliance with the requirements for initial inspection of new rail and plant welds, or of new plant welds made in used rail; and

(3) *Inspection of field welds.* Initial inspection of new field welds, either those joining the ends of CWR strings or those made for isolated repairs, shall be conducted before the start of revenue service in accordance with the railroad's inspection, testing, and maintenance program. The initial inspection may be conducted by means of portable test equipment. The railroad shall retain a record of such inspections until the

welds receive their first scheduled inspection under § 299.341.

(b) Each defective rail found during inspections conducted under paragraph (a)(3) of this section shall be marked with highly visible markings on both sides of the rail and the appropriate remedial action as set forth in § 299.341 will apply.

§ 299.345 Visual inspections; right of way.

(a) *General.* All track shall be visually inspected in accordance with the schedule prescribed in paragraph (c) of this section by an individual qualified under this subpart. The visual inspection shall be conducted in accordance with the requirements set forth in the inspection, testing, and maintenance program under subpart G of this part.

(b) *Inspection types and frequency*—(1) *Safe walkway inspection.* Except for track located inside trainset maintenance facilities and MOW yards and the associated portions of the right-of-way, the right-of-way and all track shall be inspected from the safe walkway during daytime hours, in accordance with the following conditions:

(i) Ballasted track shall be inspected at least once every two weeks, with a minimum of six calendar days in between inspections.

(ii) Non-ballasted track shall be inspected at least once every four weeks, with a minimum of twelve calendar days in between inspections.

(iii) No two consecutive visual inspections from the safe walkway shall be performed from the same safe walkway. Safe walkway inspections shall alternate between safe walkways on each side of the right-of-way.

(iv) In stations, the safe walkway inspection may be performed from either the safe walkway or the station platform.

(v) An additional on-track visual inspection conducted during maintenance hours under paragraph (b)(2) of this section performed in place of a visual inspection from the safe walkway under paragraph (b)(1) of this section will satisfy the visual inspection requirement of paragraph (b)(1) of this section. However, a safe walkway visual inspection performed under paragraph (b)(1) of this section cannot replace an on-track visual inspection conducted during maintenance hours under paragraph (b)(2) of this section.

(vi) Except for paragraph (b)(2)(v) of this section, inspections performed under paragraph (b)(1) of this section shall not occur during the same week as inspections performed under paragraph (b)(2) of this section.

(2) *On-track inspections; other than trainset maintenance facilities and MOW yards.* Except for track located inside trainset maintenance facilities and MOW yards and the associated portions of the right-of-way, on-track visual inspections, conducted on foot during maintenance hours, shall be performed on all track in accordance with the following conditions:

(i) Ballasted track shall be inspected at least once every two weeks, with a minimum of six calendar days in between inspections.

(ii) Non-ballasted track shall be inspected at least once every four weeks, with a minimum of twelve calendar days in between inspections.

(iii) Turn-outs and track crossings shall be inspected at least once a week, with a minimum of three calendar days in between inspections.

(3) *On-track inspections; trainset maintenance facilities and MOW yards.* For track located inside trainset maintenance facilities and MOW yards and the associated portions of the right-of-way, including turn-outs and track crossings, on-track visual inspections, conducted on foot during maintenance hours, shall be performed on all track in accordance with the following conditions:

(i) Ballasted track shall be inspected at least twice during any 60-day period, with a minimum of twelve calendar days in between inspections.

(ii) Non-ballasted track shall be inspected at least twice within any 120-day period, with a minimum of twenty-four calendar days in between inspections.

(4) *Visual inspections from trainset cab.* Visual inspections from trainset cab shall be performed for the right-of-way and track for track Class H3 and above, except of track leading to a trainset maintenance facility, at least twice weekly with a minimum of two calendar days between inspections.

(c) If a deviation from the requirements of this subpart is found during the visual inspection, remedial action shall be initiated immediately in accordance with the railroad's inspection, testing, and maintenance program required under subpart G of this part.

§ 299.347 Special inspections.

In the event of fire, flood, severe storm, temperature extremes, or other occurrence which might have damaged track structure, a special inspection shall be made of the track and right-of-way involved as soon as possible after the occurrence, prior to the operation of any trainset over that track.

§ 299.349 Inspection records.

(a) The railroad shall keep a record of each inspection required to be performed on that track under this subpart.

(b) Except as provided in paragraph (f) of this section, each record of an inspection under §§ 299.325 and 299.345 shall be prepared on the day the inspection is made and signed by the person making the inspection.

(c) Records shall specify the track inspected, date of inspection, location, and nature of any deviation from the requirements of this part, name of qualified individual who made the inspection, and the remedial action, if any, taken by the person making the inspection.

(d) Rail inspection records shall specify the date of inspection, the location and nature of any internal defects found, name of qualified individual who made the inspection, the remedial action taken and the date thereof, and the location of any intervals of track not tested pursuant to § 299.341 of this part. The railroad shall retain a rail inspection record for at least two years after the inspection and for one year after remedial action is taken.

(e) The railroad shall make inspection records required by this section available for inspection and copying by the FRA.

(f) For purposes of compliance with the requirements of this section, the railroad may maintain and transfer records through electronic transmission, storage, and retrieval provided that—

(1) The electronic system is compliant with the requirements of § 299.11;

(2) The electronic storage of each record shall be initiated by the person making the inspection within 24 hours following the completion of that inspection;

(3) Track inspection records shall be kept available to persons who performed the inspection and to persons performing subsequent inspections.

(g) Each track/vehicle performance record required under § 299.337 shall be made available for inspection and copying by the FRA.

§ 299.351 Qualifications for track maintenance and inspection personnel.

(a) *General.* The railroad shall designate qualified individuals responsible for the maintenance and inspection of track in compliance with the safety requirements prescribed in this subpart. Each designated individual, including contractors and their employees, must meet the minimum qualifications set forth in this subpart.

(b) *Recordkeeping.* In addition to the requirements contained in § 243.203 of this chapter, the railroad shall also maintain, with respect to the designation of individuals under this subpart, the track inspection records made by each individual as required by § 299.347.

§ 299.353 Personnel qualified to supervise track restoration and renewal.

Each individual designated to supervise restorations and renewals of track, shall have—

(a) Successfully completed a course offered by the employer or by a college level engineering program, supplemented by special on-the-job training emphasizing the techniques to be employed in the supervision, restoration, and renewal of high-speed track;

(b) Demonstrated to the railroad, at least once per calendar year, that the individual—

(1) Knows and understands the requirements of this subpart that apply to the restoration and renewal of the track for which he or she is responsible;

(2) Can detect deviations from those requirements; and,

(3) Can prescribe appropriate remedial action to correct or safely compensate for those deviations.

(c) Written authorization from the railroad or the employer to prescribe remedial actions to correct or safely compensate for deviations from the requirements of this subpart and shall have successfully completed a recorded examination on this subpart as part of the qualification process.

§ 299.355 Personnel qualified to inspect track.

Each individual designated to inspect track for defects, shall have—

(a) Successfully completed a course offered by the railroad or by a college level engineering program, supplemented by special on-the-job training emphasizing the techniques to be employed in the inspection of high-speed track;

(b) Demonstrated to the railroad, at least once per calendar year, that the individual—

(1) Knows and understands the requirements of this subpart that apply to the inspection of the track for which he or she is responsible;

(2) Can detect deviations from those requirements; and,

(3) Can prescribe appropriate remedial action to correct or safely compensate for those deviations.

(c) Written authorization from the railroad or the employer to prescribe remedial actions to correct or safely compensate for deviations from the requirements in this subpart and shall have successfully completed a recorded examination on this subpart as part of the qualification process.

§ 299.357 Personnel qualified to inspect and restore continuous welded rail.

Individuals designated under § 299.353 or 299.355 that inspect continuous welded rail (CWR) or supervise the installation, adjustment, and maintenance of CWR in accordance with the written procedures established by the railroad shall have—

(a) Current qualifications under either § 299.353 or 299.355;

(b) Successfully completed a training course of at least eight hours duration specifically developed for the application of written CWR procedures issued by the railroad;

(c) Demonstrated to the railroad that the individual—

(1) Knows and understands the requirements of those written CWR procedures;

(2) Can detect deviations from those requirements;

(3) Can prescribe appropriate remedial action to correct or safely compensate for those deviations.

(d) Written authorization from the railroad or the employer to prescribe remedial actions to correct or safely compensate for deviations from the requirements in those procedures and must have successfully completed a recorded examination on those procedures as part of the qualification process. The recorded examination may be written, or in the form of a computer file with the results of an interactive training course.

Subpart D—Rolling Stock

§ 299.401 Clearance requirements.

(a) *General.* The rolling stock shall be designed to meet all applicable clearance requirements of the railroad. The railroad shall make its clearance diagrams available to FRA upon request.

(b) *Clearance above top of rail.* No part or appliance of a trainset except the wheels, sander tips, wheel guards, and other components designed to be in the path of the wheel (*i.e.,* above the rail and aligned inside the wheel width path) may be less than 60 mm (2.36 inches) above the top of rail.

(c) *Obstacle deflector.* The leading end of a trainset shall be equipped with an obstacle deflector that extends across both rails of the track. The minimum clearance above the rail of the obstacle deflector shall be 76 mm (3 inches), and the maximum clearance shall be 229 mm (9 inches).

(d) *Flexible wheel guards.* The lead axle of a trainset shall be equipped with flexible wheel guards mounted on the bogie below the primary suspension with a maximum clearance above the rail of 15 mm (0.59 inches).

§ 299.403 Trainset structure.

(a) *Occupied volume integrity.* To demonstrate resistance to loss of occupied volume, the trainsets shall comply with both the compression load requirement in paragraph (b) of this section and the dynamic collision requirements in paragraph (c) of this section.

(b) *Compression load requirement.* The end compression load shall be applied to the vehicle as defined in JIS E 7105:2006 as amended by JIS E 7105:2011 (all incorporated by reference, see § 299.17), with an end load magnitude no less than 980 kN (220,300 lbf) without permanent deformation of the occupied volume.

(c) *Dynamic collision scenario.* In addition to the requirements of paragraph (b) of this section, occupied volume integrity shall also be demonstrated for the trainset through an evaluation of a dynamic collision scenario in which a moving trainset impacts a proxy object under the following conditions:

(1) The initially-moving trainset is made up of the equipment undergoing evaluation at its AW0 ready-to-run weight;

(2) The scenario shall be evaluated on tangent, level track;

(3) The trainset shall have an initial velocity of 32 km/h (20 mph) and shall not be braked;

(4) The proxy object shall have the following characteristics:

(i) The object shall be a solid circular cylinder that weighs 6350 kg (14,000 pounds);

(ii) The object shall have a width of 914 mm (36 inches) and a diameter of 1219 mm (48 inches);

(iii) The axis of the cylinder shall be perpendicular to the direction of trainset motion and parallel to the ground; and

(iv) The center of the object shall be located 762 mm (30 inches) above the top of the underframe.

(5) *Collision configurations.* Two collision configurations shall be evaluated.

(i) The center of the object shall be located 483 mm (19 inches) from the longitudinal centerline of the trainset; and

(ii) The center of the object shall be aligned with the side of the cab car at the point of maximum width.

(6) *Model validation.* The model used to demonstrate compliance with the

dynamic collision requirements must be validated. Model validation shall be demonstrated and submitted to FRA for review and approval.

(7) *Dynamic collision requirements.* As a result of the impact described in paragraphs (c)(5)(i) and (ii) of this section—

(i) One of the following two conditions must be met for the occupied volume:

(A) There shall be no more than 254 mm (10 inches) of longitudinal permanent deformation; or

(B) Global vehicle shortening shall not exceed 1 percent over any 4.6 m (15-feet) length of occupied volume.

(ii) Compliance with each of the following conditions shall also be demonstrated for the cab after the impact:

(A) Each seat provided for an employee regularly assigned to occupy the cab, and any floor-mounted seat in the cab, shall maintain a survival space where there is no intrusion for a minimum of 305 mm (12 inches) from each edge of the seat. Walls or other items originally within this defined space shall not further intrude more than 38 mm (1.5 inches) towards the seat under evaluation.

(B) There shall be a clear exit path for the occupants of the cab;

(C) The vertical height of the cab (floor to ceiling) shall not be reduced by more than 20 percent; and

(D) The operating console shall not have moved closer to the driver's seat by more than 51 mm (2 inches).

(d) *Equipment override.* (1) Using the dynamic collision scenarios described in paragraph (c) of this section, and with all units in the trainset are positioned at their nominal running heights, the anti-climbing performance shall be evaluated for each of the following sets of initial conditions:

(2) For the initial conditions specified in paragraphs (c)(1) through (3) of this section, compliance with the following conditions shall be demonstrated after a dynamic impact:

(i) The relative difference in elevation between the underframes of the connected equipment shall not change by more than 102 mm (4 inches); and

(ii) The tread of any wheel of the trainset shall not rise above the top of rail by more than 102 mm (4 inches).

(e) *Roof and side structure integrity.* To demonstrate roof and side structure integrity, each passenger car shall comply with the following:

(1) *Rollover strength.* (i) Each passenger car shall be designed to rest on its side and be uniformly supported at the top and bottom cords of the vehicle side. The allowable stress in the structural members of the occupied volumes for this condition shall be one-half yield or one-half the critical buckling stress, whichever is less. Local yielding to the outer skin of the passenger car is allowed provided that the resulting deformations in no way intrude upon the occupied volume of the car.

(ii) Each passenger car shall also be designed to rest on its roof so that any damage in occupied areas is limited to roof extrusions. Other than roof extrusions, the allowable stress in the structural members of the occupied volumes for this condition shall be one-half yield or one-half the critical buckling stress, whichever is less. Local yielding to the outer skin, including the floor structure, of the car is allowed provided that the resulting deformations in no way intrude upon the occupied volume of the car. Deformation to the roof extrusions is allowed to the extent necessary to permit the vehicle to be supported directly on the top chords of the sides and ends.

(2) *Side structure.* (i) The sum of the section moduli about a longitudinal axis, taken at the weakest horizontal section between the side sill and roof, of the extrusions on each side of the car located between the inside edge of the doors shall be not less than 3.95x105 mm^3 (24.1 in^3).

(ii) The sum of the section moduli about a transverse axis, taken at the weakest horizontal section on each side of the car located between body corners shall be not less than 2.64x105 mm^3 (16.1 in^3).

(iii) The minimum section moduli or thicknesses specified in paragraph (f)(2)(i) of this section shall be adjusted in proportion to the ratio of the yield strength of the material used to a value of 172 MPa (25 ksi).

(iv) The combined thickness of the skin of the side structure extrusions shall not be less than 3 mm (0.125 inch) nominal thickness. The thicknesses shall be adjusted in proportion to the ratio of the yield strength of the material used to a value of 172 MPa (25 ksi).

(f) *Bogie-to-carbody attachment.* (1) The bogie-to-carbody attachment shall utilize the service proven design as used on the N700.

(2) The bogie shall be securely attached to the carbody and designed to operate without failure under the operating conditions of the railroad, including expected mechanical shocks and vibrations.

§ 299.405 Trainset interiors.

(a) *Interior fittings.* Interior fittings of trainsets shall be—

(1) Securely attached and designed to operate without failure under the conditions typically found in passenger rail equipment including expected mechanical vibrations, and shock.

(2) To the extent possible, all interior fittings shall be recessed or flush mounted. Corners and/or sharp edges shall be either avoided or padded to mitigate the consequence of impact with such surfaces.

(b) *Luggage stowage.* (1) Luggage stowage racks shall slope downward in the outboard direction at a minimum ratio of 1:8 with respect to a horizontal plane to provide lateral restraint for stowed articles.

(2) Luggage stowage compartments shall provide longitudinal restraint for stowed articles.

§ 299.407 Glazing.

(a) *General.* The railroad shall install glazing systems compliant with the requirements defined in this section.

(b) *Trainset glazing; end-facing.* (1) Each end-facing exterior window of the trainset shall comply with the requirements for large object and ballistic impact scenarios as defined in this section.

(2) Each end-facing exterior window of the trainset shall demonstrate compliance with the following requirements for the large object impact test.

(i) The glazing article shall be impacted with a cylindrical projectile that complies with the following design specifications as depicted in Figure 6 to paragraph (b)(2)(i)(D) of this section:

(A) The projectile shall be constructed of aluminum alloy such as ISO 6362–2:1990, grade 2017A, or its demonstrated equivalent;

(B) The projectile end cap shall be made of steel;

(C) The projectile assembly shall weigh 1 kilogram (kg) (−0, +0.020 kg) or 2.2 lbs (−0, +0.044 lbs) and shall have a hemispherical tip. Material may be removed from the interior of the aluminum portion to adjust the projectile mass according to the prescribed tolerance. The hemispherical tip shall have a milled surface with 1 mm (0.04 inches) grooves; and

(D) The projectile shall have an overall diameter of 94 mm (3.7 inches) with a nominal internal diameter of 70 mm (2.76 inches).

Figure 6 to paragraph (b)(2)(i)(D) - Large Object Glazing Test Projectile

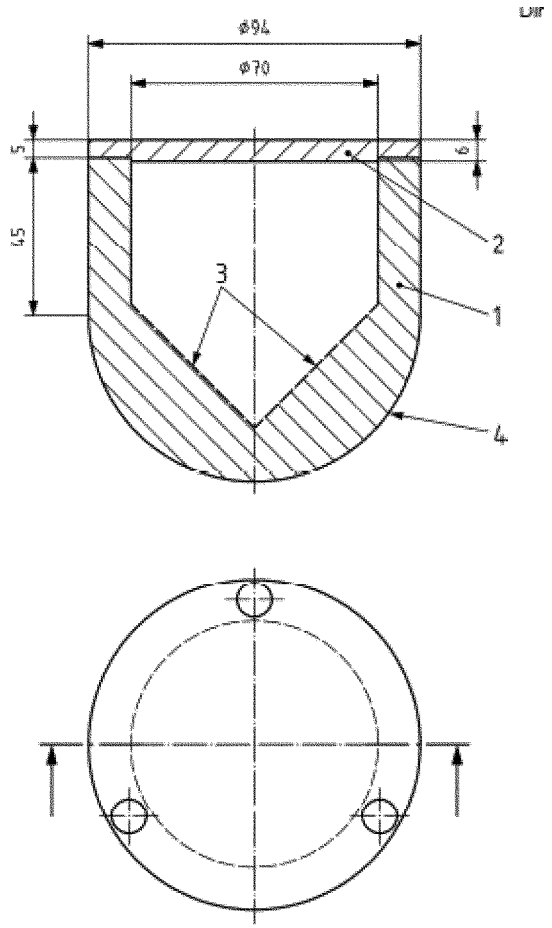

Key

1 projectile in aluminium alloy (ISO 6362-2:1990, grade 2017A)
2 steel projectile cover
3 material may be removed for adjustment purposes
4 milled surface of hemispheric tip (1 mm)

(ii) The test of the glazing article shall be deemed satisfactory if the test projectile does not penetrate the glazing article, the glazing article remains in its frame, and the witness plate is not marked by spall.

(iii) A new projectile shall be used for each test.

(iv) The glazing article to be tested shall be that which has the smallest area for each design type. For the test, the glazing article shall be fixed in a frame of the same construction as that mounted on the vehicle.

(v) A minimum of four tests shall be conducted and all must be deemed satisfactory. Two tests shall be conducted with the complete glazing article at 0°C ± 0.5°C (32°F ± 0.9°F) and two tests shall be conducted with the complete glazing article at 20°C ± 5°C (68°F ± 9°F). For the tests to be valid it shall be demonstrated that the core temperature of the complete glazing article during each test is within the required temperature range.

(vi) The test glazing article shall be mounted at the same angle relative to the projectile path as it will be to the direction of travel when mounted on the vehicle.

(vii) The projectile's impact velocity shall equal the maximum operating speed of the trainset plus 160 km/h (100 mph). The projectile velocity shall be measured within 4 m (13 feet) of the point of impact.

(viii) The point of impact shall be at the geometrical center of the glazing article.

(3) Representative samples for large object impact testing of large end-facing cab glazing articles may be used, instead of the actual design size provided that the following conditions are met:

(i) Testing of glazing articles having dimensions greater than 1,000 mm by 700 mm (39.4 by 27.6 inches), excluding framing, may be performed using a flat sample having the same composition as the glazing article for which compliance is to be demonstrated. The glazing manufacturer shall provide documentation containing its technical justification that testing a flat sample is sufficient to verify compliance of the glazing article with the requirements of this paragraph.

(ii) Flat sample testing is permitted only if no surface of the full-size glazing article contains curvature whose radius is less than 2,500 mm (98 inches); and when a complete, finished, glazing article is laid (convex side uppermost) on a flat horizontal surface, the distance, (measured perpendicularly to the flat surface) between the flat surface and the inside face of the glazing article is not greater than 200 mm (8 inches).

(4) End-facing glazing shall demonstrate sufficient resistance to spalling, as verified by the large impact

projectile test under the following conditions:

(i) An annealed aluminum witness plate of maximum thickness 0.15 mm (0.006 inches) and of dimension 500 mm by 500 mm (19.7 by 19.7 inches) is placed vertically behind the sample under test, at a horizontal distance of 500 mm (19.7 inches) from the point of impact in the direction of travel of the projectile or the distance between the point of impact of the projectile and the location of the driver's eyes in the driver's normal operating position, whichever is less. The center of the witness plate is aligned with the point of impact.

(ii) Spalling performance shall be deemed satisfactory if the aluminum witness plate is not marked.

(iii) For the purposes of this part, materials used specifically to protect the cab occupants from spall (*i.e.,* spall shields) shall not be required to meet the flammability and smoke emission performance requirements of § 299.413.

(5) Each end-facing exterior window in a cab shall, at a minimum, provide ballistic penetration resistance that meets the requirements of appendix A to part 223 of this chapter.

(c) *Trainset glazing; side-facing.* Except as provided in paragraph (d) of this section, each side-facing exterior window in a trainset shall comply with the requirements for Type II glazing as defined in part 223 of this chapter or other alternative standard approved by FRA.

(d) *Side-facing breakable glazing.* A side-facing exterior window intended to be breakable and serve as an emergency window exit may comply with an alternative standard approved for use by FRA under § 299.15.

(e) *Certification of Glazing Materials.* Glazing materials shall be certified in accordance with the following procedures:

(1) Each manufacturer that provides glazing materials, intended by the manufacturer for use in achieving compliance with the requirements of this subpart, shall certify that each type of glazing material being supplied for this purpose has been successfully tested in accordance with this section and that test verification data are available to the railroad or to FRA upon request.

(2) Tests performed on glazing materials for compliance with this part shall be conducted by either—

(i) An independent third party (lab, facility, underwriter); or

(ii) The glazing manufacturer, providing FRA with the opportunity to witness all tests by written notice, a minimum of 30 days prior to testing.

(3) Any glazing material certified to meet the requirements of this part shall be re-certified if any change is made to the glazing that may affect its mechanical properties or its mounting arrangement on the vehicle.

(4) All certification/re-certification documentation shall be made available to FRA upon request. The test verification data shall contain all pertinent original data logs and documentation that the selection of material samples, test set-ups, test measuring devices, and test procedures were performed by qualified individuals using recognized and acceptable practices and in accordance with this section.

(5) Glazing shall be marked in the following manner:

(i) Each end-facing exterior window in a cab shall be permanently marked, prior to installation, in such a manner that the marking is clearly visible after the material has been installed. The marking shall include:

(A) The words ''FRA TYPE IHS'' to indicate that the material meets the requirements specified in paragraph (b) of this section;

(B) The manufacturer of the material; and

(C) The type or brand identification of the material.

(ii) Each side-facing exterior window in a trainset shall be permanently marked, prior to installation, in such a manner that the marking is clearly visible after the material has been installed. The marking shall include:

(A) The words ''FRA TYPE II'' to indicate that the material meets the requirements specified in paragraph (c) of this section;

(B) The manufacturer of the material; and

(C) The type or brand identification of the material.

(f) *Glazing securement.* Each exterior window shall remain in place when subjected to—

(1) The forces due to air pressure differences caused when two trainsets pass at the minimum separation for two adjacent tracks, while traveling in opposite directions, each trainset traveling at the maximum approved trainset speed in accordance with § 299.609(g); and

(2) The impact forces that the exterior window is required to resist as specified in this section.

§ 299.409 Brake system.

(a) *General.* The railroad shall demonstrate through analysis and testing the maximum safe operating speed for its trainsets that results in no thermal damage to equipment or infrastructure during normal operation of the brake system.

(b) *Minimum performance requirement for brake system.* Each trainset's brake system, under the worst-case adhesion conditions as defined by the railroad, shall be capable of stopping the trainset from its maximum operating speed within the signal spacing existing on the track over which the trainset is operating.

(c) *Urgent brake system.* A trainset shall be provided with an urgent brake application feature that produces an irretrievable stop. An urgent brake application shall be available at any time, and shall be initiated by an unintentional parting of the trainset or by the trainset crew from the conductor rooms.

(d) *Application/release indication.* The brake system shall be designed so that an inspector may determine whether the brake system is functioning properly without being placed in a dangerous position on, under or between the equipment. This determination may be made through automated monitoring system that utilizes sensors to verify that the brakes have been applied and released.

(e) *Passenger brake alarm.* (1) A means to initiate a passenger brake alarm shall be provided at two locations in each unit of a trainset. The words ''Passenger Brake Alarm'' shall be legibly stenciled or marked on each device or on an adjacent badge plate.

(2) All passenger brake alarms shall be installed so as to prevent accidental activation.

(3) When a passenger brake alarm is activated, it shall initiate an emergency brake application. The emergency brake application can be overridden by the driver so that the trainset can be stopped at a safe location.

(4) To retrieve the emergency brake application described in paragraph (e)(3) of this section, the driver must activate appropriate controls to issue a command for brake application as specified in the railroad's operating rules.

(f) *Degraded brake system performance.* The following requirements address degraded brake system performance on the railroad's high-speed trainsets—

(1) Loss of power or failure of regenerative brake shall not result in exceeding the allowable stopping distance as defined by the railroad;

(2) The available friction braking shall be adequate to stop the trainset safely under the operating conditions defined by the railroad;

(3) The operational status of the trainset brake system shall be displayed for the driver in the operating cab; and

(4) Under § 299.607(b)(5), the railroad shall demonstrate through analysis and testing the maximum speed for safely operating its trainsets using only the friction brake system with no thermal damage to equipment or infrastructure. The analysis and testing shall also determine the maximum safe operating speed for various percentages of operative friction brakes.

(g) *Main reservoir system.* The main reservoirs in a trainset shall be designed and tested to meet the requirements set forth in JIS B 8265 (incorporated by reference, see § 299.17). Reservoirs shall be certified based on their size and volume requirements.

(h) *Main reservoir tests.* Prior to initial installation, each main reservoir shall be subjected to a pneumatic or hydrostatic pressure test based on the maximum working pressure defined in paragraph (g) of this section unless otherwise established by the railroad's mechanical officer. Records of the test date, location, and pressure shall be maintained by the railroad for the life of the equipment. Periodic inspection requirements for main reservoirs shall be defined in the railroad's inspection, testing, and maintenance program required by § 299.445.

(i) *Brake gauges.* All mechanical gauges and all devices providing electronic indication of air pressure that are used by the driver to aid in the control or braking of a trainset shall be located so that they can be conveniently read from the driver's normal position during operation of the trainset.

(j) *Brake application/release.* (1) Brake actuators shall be designed to provide brake pad clearance when the brakes are released.

(2) The minimum brake cylinder pressure shall be established to provide adequate adjustment from minimum service to emergency for proper trainset operation.

(k) *Leakage.* The method of inspection for main reservoir pipe and brake cylinder pipe leakage shall be prescribed in the railroad's inspection, testing, and maintenance program required by § 299.445.

(l) *Slide alarm.* (1) A trainset shall be equipped with an adhesion control system designed to automatically adjust the braking force on each wheel to prevent sliding during braking.

(2) A wheel slide alarm that is visual or audible, or both, shall alert the driver in the operating cab to wheel-slide conditions on any axle of the trainset.

(3) Operating restrictions for a trainset with wheel slide protection devices that are not functioning as intended shall be defined by the railroad under its requirements for movement of defective equipment required by § 299.447, and within the railroad's operating rules, as appropriate.

(m) *Monitoring and diagnostic system.* Each trainset shall be equipped with a monitoring and diagnostic system that is designed to automatically assess the functionality of the brake system for the entire trainset. Details of the system operation and the method of communication of brake system functionality prior to the dispatch of the trainset shall be described in detail in the railroad's Operating Rules and inspection, testing, and maintenance program required by § 299.445.

(n) *Trainset securement.* Each trainset shall be equipped with a means of securing the equipment, independent of the friction brake, on the grade condition defined by the railroad. The railroad's operating rules shall define procedures for trainset securement and the railroad shall demonstrate that these procedures effectively secure the equipment in accordance with § 299.607(b)(5).

(o) *Rescue operation; brake system.* A trainset's brake system shall be designed so as to allow a rescue vehicle or trainset to control its brakes when the trainset is disabled.

§ 299.411 Bogies and suspension system.

(a) *Wheel climb.* (1) Suspension systems shall be designed to reasonably prevent wheel climb, wheel unloading, rail rollover, rail shift, and a vehicle from overturning to ensure safe, stable performance and ride quality. These requirements shall be met—

(i) In all operating environments, and under all track conditions and loading conditions as determined by the railroad; and

(ii) At all track speeds and over all track qualities consistent with the requirements in subpart C of this part, up to the maximum trainset speed and maximum cant deficiency of the equipment in accordance with § 299.609(g).

(2) All passenger equipment shall meet the safety performance standards for suspension systems contained in § 299.609(h). In particular—

(i) *Vehicle/track system qualification.* All trainsets shall demonstrate safe operation during pre-revenue service qualification in accordance with § 299.609 and is subject to the requirements of § 299.313.

(ii) *Revenue service operation.* All passenger equipment in service is subject to the requirements of § 299.313.

(b) *Lateral accelerations.* The trainsets shall not operate under conditions that result in a steady-state lateral acceleration greater than 0.15g, as measured parallel to the car floor inside the passenger compartment.

(c) *Journal bearing overheat sensors.* Bearing overheat sensors shall be provided on all journal bearings on each trainset.

§ 299.413 Fire safety.

(a) *General.* All materials used in constructing the interior of the trainset shall meet the flammability and smoke emission characteristics and testing standards contained in appendix B to part 238 of this chapter. For purposes of this section, the interior of the trainset includes walls, floors, ceilings, seats, doors, windows, electrical conduits, air ducts, and any other internal equipment.

(b) *Certification.* The railroad shall require certification that a representative sample of combustible materials to be—

(1) Used in constructing a passenger car or a cab, or

(2) Introduced in a passenger car or a cab, as part of any kind of rebuild, refurbishment, or overhaul of the car or cab, has been tested by a recognized independent testing laboratory and that the results show the representative sample complies with the requirements of paragraph (a) of this section at the time it was tested.

(c) *Fire safety analysis.* The railroad shall ensure that fire safety considerations and features in the design of the trainsets reduce the risk of personal injury caused by fire to an acceptable level in its operating environment using a formal safety methodology. To this end, the railroad shall complete a written fire safety analysis for the passenger equipment being procured. In conducting the analysis, the railroad shall—

(1) Identify, analyze, and prioritize the fire hazards inherent in the design of the equipment.

(2) Take effective steps to design the equipment and select materials which help provide sufficient fire resistance to reasonably ensure adequate time to detect a fire and safely evacuate the passengers and crewmembers, if a fire cannot be prevented. Factors to consider include potential ignition sources; the type, quantity, and location of the materials; and availability of rapid and safe egress to the exterior of the equipment under conditions secure from fire, smoke, and other hazards.

(3) Reasonably ensure that a ventilation system in the equipment

does not contribute to the lethality of a fire.

(4) Identify in writing any trainset component that is a risk of initiating fire and which requires overheat protection. An overheat detector shall be installed in any component when the analysis determines that an overheat detector is necessary.

(5) Identify in writing any unoccupied trainset compartment that contains equipment or material that poses a fire hazard, and analyze the benefit provided by including a fire or smoke detection system in each compartment so identified. A fire or smoke detector shall be installed in any unoccupied compartment when the analysis determines that such equipment is necessary to ensure sufficient time for the safe evacuation of passengers and crewmembers from the trainset. For purposes of this section, an unoccupied trainset compartment means any part of the equipment structure that is not normally occupied during operation of the trainset, including a closet, baggage compartment, food pantry, etc.

(6) Determine whether any occupied or unoccupied space requires a portable fire extinguisher and, if so, the proper type and size of the fire extinguisher for each location. As required by § 239.101 of this chapter, each passenger car is required to have a minimum of one portable fire extinguisher. If the analysis performed indicates that one or more additional portable fire extinguishers are needed, such shall be installed.

(7) Analyze the benefit provided by including a fixed, automatic fire-suppression system in any unoccupied trainset compartment that contains equipment or material that poses a fire hazard, and determine the proper type and size of the automatic fire-suppression system for each such location. A fixed, automatic fire-suppression system shall be installed in any unoccupied compartment when the analysis determines that such equipment is practical and necessary to ensure sufficient time for the safe evacuation of passengers and crewmembers from the trainset.

(8) Explain how safety issues are resolved in the design of the equipment and selection of materials to reduce the risk of each fire hazard.

(9) Describe the analysis and testing necessary to demonstrate that the fire protection approach taken in the design of the equipment and selection of materials meets the fire protection requirements of this part.

(d) *Inspection, testing, and maintenance.* The railroad shall develop and adopt written procedures for the inspection, testing, and maintenance of all fire safety systems and fire safety equipment on the passenger equipment it operates under § 299.445(b), and subpart G of this part. The railroad shall comply with those procedures that it designates as mandatory for the safety of the equipment and its occupants.

§ 299.415 Doors.

(a) Each powered, exterior side door in a vestibule that is partitioned from the passenger compartment of a trainset shall have a manual override device that is—

(1) Capable of releasing the door to permit it to be opened without power.

(2) Located such that—

(i) Interior access is provided adjacent to each manual door release mechanism; and,

(ii) Exterior access is provided on each side of each car.

(3) Designed and maintained so that a person may readily access and operate the override device without requiring the use of a tool or other implement.

(4) The railroad may protect a manual override device used to open a powered, exterior door with a cover or a screen.

(5) When a manual override device is activated, door panel friction, including seals and hangers, shall allow the doors to be opened or closed manually with as low a force as practicable.

(6) The emergency release mechanism shall require manual reset.

(b) Each passenger car shall have a minimum of one exterior side door per side. Each such door shall provide a minimum clear opening with dimensions of 813 mm (32 inches) horizontally by 1850 mm (72.8 inches) vertically.

(c) Door exits shall be marked, and instructions provided for their use, as specified in § 299.423.

(d) All doors intended for access by emergency responders shall be marked, and instructions provided for their use, as specified in § 299.423.

(e) Vestibule doors and other interior doors intended for passage through a passenger car.

(1) *General.* Except for a door providing access to a control compartment each powered vestibule door and any other powered interior door intended for passage through a passenger car shall have a manual override device that conforms with the requirements of paragraphs (e)(2) and (3) of this section.

(2) *Manual override devices.* Each manual override device shall be:

(i) Capable of releasing the door to permit it to be opened without power;

(ii) Located adjacent to the door it controls; and

(iii) Designed and maintained so that a person may readily access and operate the override device from each side of the door without the use of a tool or other implement.

(3) *Marking and instructions.* Each manual override device and each retention mechanism shall be marked, and instructions provided for their use, as specified in § 299.423.

(f) The status of each powered, exterior side door in a passenger car shall be displayed to the driver in the operating cab. Door interlock sensors shall be provided to detect trainset motion and shall be nominally set to operate at 5 km/h.

(g) All powered exterior side passenger doors shall:

(1) Be equipped with the service-proven door safety system utilized by the N700 or an alternate door safety system designed subject to a Failure Modes, Effects, Criticality Analysis (FMECA);

(2) Be designed with an obstruction detection system capable of detecting a rigid flat bar, 6.4 mm (¼ inches) wide and 76 mm (3 inches) high and a rigid rod, 9.5 mm (⅜ inches) in diameter;

(3) Incorporate an obstruction detection system sufficient to detect large obstructions;

(4) Be designed so that activation of a door by-pass feature does not affect the operation of the obstruction detection system on all the other doors on the trainset;

(5) The door control station shall be located in a secured area that is only accessible to crewmembers or maintenance personnel;

(6) The door open or closed circuit shall not be affected by the throttle position; and,

(7) Discrete, dedicated trainlines shall be used for door-open and door-close commands, door-closed summary circuit, and no motion, if trainlined.

(h) All powered exterior side door systems in a trainset shall:

(1) Be designed with a door summary circuit. The door summary circuit shall be connected or interlocked to prohibit the trainset from developing tractive power if an exterior side door in a passenger car, other than a door under the direct physical control of a crewmember for his or her exclusive use, is not closed;

(2) Be connected to side door status indicators located on the exterior of each unit of the trainset;

(3) Be connected to a door summary status indicator that is readily viewable to the driver from his or her normal position in the operating cab;

(4) If equipped with a trainset-wide door by-pass device, be designed so that the trainset-wide door by-pass functions

only when activated from the operating cab of the trainset;

(5) A lock (cut-out/lock-out) mechanism shall be installed at each door panel to secure a door in the closed and locked position. When the lock mechanism is utilized to secure the door in the closed position, a door-closed indication shall be provided to the door summary circuit; and,

(6) A crew key or other secure device shall be required to lock-out an exterior side door to prevent unauthorized use.

(i)(1) *Visual inspections and functional tests.* The inspection and functional tests required for the door safety system, including the trainset-wide by-pass verification, shall be conducted in accordance with the railroad's trainset inspection, testing, and maintenance program in accordance with § 299.445, and operating rules under subpart E.

(2) *Face-to-face relief.* Crewmembers taking control of a trainset do not need to perform a visual inspection or a functional test of the door by-pass devices in cases of face-to-face relief of another trainset crew and notification by that crew as to the functioning of the door by-pass devices.

(j) The railroad shall maintain a record of each door by-pass activation and each unintended opening of a powered exterior side door, including any repair(s) made, in the defect tracking system as required by § 299.445(h).

§ 299.417 Emergency lighting.

(a) *General.* Emergency lighting shall be provided in each unit of a trainset. The emergency lighting system shall be designed to facilitate the ability of passengers and trainset crew members, and/or emergency responders to see and orient themselves, to identify obstacles, in order to assist them to safely move through and out of a passenger rail car.

(1) Emergency lighting shall illuminate the following areas:

(i) Passenger car aisles, passageways, and toilets;

(ii) Door emergency exit controls/manual releases;

(iii) Vestibule floor near the door emergency exits (to facilitate safe entrance/exit from the door);

(iv) Within the car diaphragm and adjacent area; and

(v) Specialty car locations such as crew offices.

(b) *Minimum illumination levels.* (1) A minimum, average illumination level of 10.7 lux (1 foot-candle) measured at floor level adjacent to each exterior door and each interior door providing access to an exterior door (such as a door opening into a vestibule);

(2) A minimum, average illumination level of 10.7 lux (1 foot-candle) measured 635 mm (25 inches) above floor level along the center of each aisle and passageway;

(3) A minimum illumination level of 1.1 lux (0.1 foot-candle) measured 635 mm (25 inches) above floor level at any point along the center of each aisle and passageway;

(c) *Lighting activation.* Each emergency lighting fixture shall activate automatically or be energized continuously whenever the car is in revenue service and normal lighting is not available.

(d) *Independent power source.* Emergency lighting system shall have an independent power source(s) that is located in or within one half a car length of each light fixture it powers.

(e) *Functional requirements.* Emergency lighting system components shall be designed to operate without failure and capable of remaining attached under the conditions typically found in passenger rail equipment including expected mechanical vibrations, and shock in accordance with § 299.405(a)(1), as well as comply with electromagnetic interference criteria in § 299.435(e).

(1) All emergency lighting system components shall be capable to operate in all railcar orientations.

(2) All emergency lighting system components shall be capable to operate when normal power is unavailable for 90 minutes without a loss of more than 40% of the minimum illumination levels specified in paragraph (b) of this section.

(f) *Inspection.* (1) The railroad shall inspect the emergency lighting system as required by its inspection, testing, and maintenance program in accordance with § 299.445.

(2) If batteries are used as independent power sources, they shall have automatic self-diagnostic modules designed to perform discharge tests.

§ 299.419 Emergency communication.

(a) *PA (public address) system.* Each passenger car shall be equipped with a PA system that provides a means for a trainset crewmember to communicate by voice to passengers of his or her trainset in an emergency situation. The PA system shall also provide a means for a trainset crewmember to communicate by voice in an emergency situation to persons in the immediate vicinity of his or her trainset (*e.g.,* persons on the station platform). The PA system may be part of the same system as the intercom system.

(b) *Intercom system.* Each passenger car shall be equipped with an intercom system that provides a means for passengers and crewmembers to communicate by voice with each other in an emergency situation. Except as further specified, at least one intercom that is accessible to passengers without using a tool or other implement shall be located in each end (half) of each car.

(c) *Marking and instructions.* The following requirements apply to all units of a trainset:

(1) The location of each intercom intended for passenger use shall be conspicuously marked with HPPL material in accordance with § 299.423; and

(2) Legible and understandable operating instructions shall be made of HPPL material in accordance with § 299.423 and posted at or near each such intercom.

(d) *Back-up power.* PA and intercom systems shall have a back-up power system capable of—

(1) Powering each system to allow intermittent emergency communication for a minimum period of 90 minutes. Intermittent communication shall be considered equivalent to continuous communication during the last 15 minutes of the 90-minute minimum period; and

(2) Operating in all equipment orientations within 90 degrees of vertical.

(e) *Additional requirements.* The PA and intercom systems shall be designed to operate without failure and remain attached under the conditions typically found in passenger rail equipment including expected mechanical vibrations, and shock in accordance with § 299.405(a)(1), as well as comply with electromagnetic interference criteria in § 299.435(e).

§ 299.421 Emergency roof access.

(a) *Number and dimensions.* Each passenger car shall have a minimum of two emergency roof access locations, each providing a minimum opening of 660 mm (26 inches) longitudinally (*i.e.,* parallel to the longitudinal axis of the car) by 610 mm (24 inches) laterally.

(b) *Means of access.* Emergency roof access shall be provided by means of a conspicuously marked structural weak point in the roof for access by properly equipped emergency response personnel.

(c) *Location.* Emergency roof access locations shall be situated so that when a car is on its side—

(1) One emergency access location is situated as close as practicable within each half of the roof as divided top from bottom; and

(2) One emergency access location is situated as close as practicable within

each half of the roof as divided left from right. (See Figure 2 to this paragraph.)

Figure 7 to paragraph (c)(2) - Example of Location of Emergency Roof Access

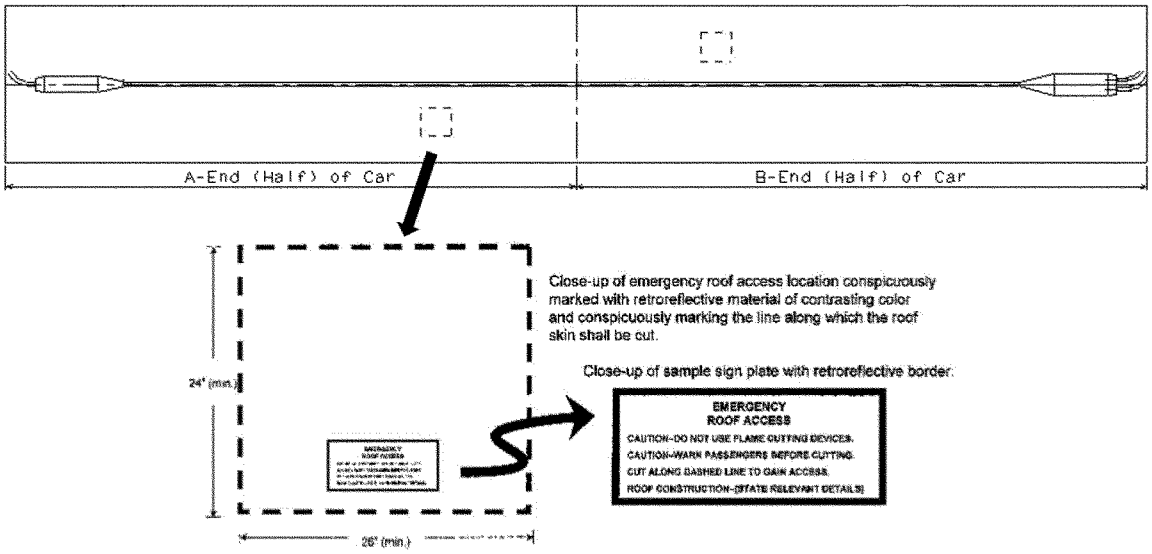

(d) *Obstructions.* The ceiling space below each emergency roof access location shall be free from wire, cabling, conduit, and piping. This space shall also be free of any rigid secondary structure (*e.g.,* a diffuser or diffuser support, lighting back fixture, mounted PA equipment, or luggage rack) where practicable. It shall be permissible to cut through interior panels, liners, or other non-rigid secondary structures after making the cutout hole in the roof, provided any such additional cutting necessary to access the interior of the vehicle permits a minimum opening of the dimensions specified in paragraph (a) of this section to be maintained.

(e) *Marking instructions.* Each emergency roof access location shall be conspicuously marked with retroreflective material of contrasting color meeting the minimum requirements specified in § 299.423. Legible and understandable instructions shall be posted at or near each such location.

§ 299.423 Markings and instructions for emergency egress and rescue access.

(a) *General.* Instructions and markings shall be provided in each unit of a trainset in accordance with the minimum requirements of this section to provide instructions for passengers and trainset crewmembers for regarding emergency egress, and rescue access instructions for emergency responders.

(b) *Visual identity and recognition.* Emergency exit signage/marking systems shall enable passengers and trainset crewmembers to make positive identification of emergency exits.

(1) Each interior emergency exit sign and emergency exit locator sign shall be conspicuous (*i.e.,* clearly recognizable/distinguishable) or become conspicuous to passengers and trainset crewmembers immediately and automatically upon the loss of power for normal lighting, from a minimum distance of 1.52 m (5 feet).

(2) The signs and markings shall operate independently of the car's normal and emergency lighting systems, for a minimum of 90 minutes after loss of all power for normal lighting.

(3) An emergency exit locator sign shall be located in close proximity of each emergency exit and shall work in conjunction with the emergency exit sign. The location of the sign, directional arrow(s), or wording shall guide passengers and trainset crewmembers to the emergency exit route.

(c) *Rescue access signage/marking systems.* (1) Rescue access signage and marking systems shall enable emergency responders to make positive identification of rescue access points.

(2) Rescue access information for emergency responders placed on the exterior of the carbody shall, at a minimum, consist of the following:

(i) Each door intended for use by emergency responders for rescue access shall be identified with emergency access signs, symbols, or other conspicuous marking consisting of retroreflective material that complies with paragraphs (d) and (e) of this section.

(ii) Rescue access door control locator signs/markings and instructions;

(A) Each door intended for use by emergency responders for rescue access shall have operating instructions for opening the door from outside the car placed on or immediately adjacent to the door on the carbody. If a power door does not function with an integral release mechanism, the instructions shall indicate the location of the exterior manual door control.

(B) Each power door intended for use by emergency responders for rescue access which has a non-integral release mechanism located away from the door, shall have a door control sign/marking placed at the location of this control that provides instructions for emergency operation, either as part of the access sign/marking or as another sign/marking.

(C) Each car equipped with manual doors shall have operating instructions for opening the door from the exterior, either as part of the access sign/marking or as another sign/marking.

(iii) Rescue access window locator signs/markings and instructions;

(A) Each rescue access window shall be identified with a unique retroreflective and easily recognizable sign, symbol, or other conspicuous marking that complies with paragraphs (d) and (e) of this section.

(B) Signs, symbols, or marking shall be placed at the bottom of each such window, on each window, or adjacent

to each window, utilizing arrows, where necessary, to clearly designate rescue assess window location. Legible and understandable window-access instructions, including any pictogram/instructions for removing the window, shall be posted at or near each rescue access window.

(iv) Roof access locator signs/markings and instructions.

(A) The location of each emergency access point provided on the roof of a passenger car shall be clearly marked with retroreflective material of contrasting color that complies with paragraphs (d) and (e) of this section.

(B) Legible and understandable instructions shall be posted at or near each such location.

(C) If emergency roof access is provided by means of a structural weak point:

(*1*) The retroreflective material shall clearly mark the line along which the roof skin shall be cut; and

(*2*) A sign plate with a retroreflective border shall also state:

CAUTION—DO NOT USE FLAME CUTTING DEVICES.
CAUTION—WARN PASSENGERS BEFORE CUTTING.
CUT ALONG DASHED LINE TO GAIN ACCESS.
ROOF CONSTRUCTION—[STATE RELEVANT DETAILS].

(d) *Color contrast.* Exterior signs/markings shall provide luminance contrast ratio of not less than 0.5, as measured by a color-corrected photometer.

(e) *Materials*—(1) *Retroreflective material.* Exterior emergency rescue access locator signs/markings shall be constructed of retroreflective material that conforms to the specifications for Type I material sheeting, as specified in ASTM D 4956–07 $^{\varepsilon\neq}$ (incorporated by reference, see § 299.17), ''as tested in accordance with ASTM E 810–03 (incorporated by reference, see § 299.17).

(2) *HPPL materials.* All HPPL materials used in finished component configurations shall comply with the minimum luminance criterion of 7.5 mcd/m^2 after 90 minutes when tested according to the provisions of ASTM E 2073–07 (incorporated by reference, see § 299.17), with the following three modifications:

(i) *Activation.* The HPPL material shall be activated with a fluorescent lamp of 40W or less and a color temperature of 4000–4500K that provides no more than 10.7 lux (1 fc) of illumination as measured on the material surface. The activation period shall be for no more than 60 minutes.

(ii) *Luminance.* The photopic luminance of all specimens of the HPPL material shall be measured with a luminance meter as defined in section 5.2 of ASTM E 2073–07, a minimum of 90 minutes after activation has ceased.

(iii) *Luminance in mcd/m^2.* The test report shall include a luminance measurement 90 minutes after activation has ceased.

(f) *Recordkeeping.* (1) The railroad shall retain a copy of the car manufacturer/supplier provided independent laboratory certified test report results showing that the illuminance or luminance measurements, as appropriate, on the active area of the signage/marking component. Such records shall be kept until all cars with those components are retired, transferred, leased, or conveyed to another railroad for use in revenue service. A copy of such records shall be transferred to the accepting railroad along with any such cars.

(2) The railroad shall retain a copy of the railroad-approved illuminance test plan(s) and test results until the next periodic test, or other test specified in accordance with the railroad's inspection, testing, and maintenance program is conducted on a representative car/area, or until all cars of that type are retired, or are transferred, leased, or conveyed to another railroad. A copy of such records shall be transferred to the accepting railroad along with such car(s).

(3) The railroad shall retain a copy of the certified independent laboratory test report results that certify that the retroreflective material complies with Type I materials per ASTM D–4956–07 $^{\text{epsiv;1}}$ until all cars containing the retroreflective material are retired, or are transferred, leased, or conveyed to another railroad. A copy of such records shall be provided to the accepting railroad along with any car(s) that are transferred, leased, or conveyed.

§ 299.425 Low-location emergency exit path marking.

(a) *General.* Low-location emergency exit path marking (LLEEPM) shall be provided in each unit of a trainset. The LLEEPM system shall be designed to identify the location of primary door exits and the exit path to be used to reach such doors by passengers and trainset crewmembers under conditions of darkness when normal and emergency sources of illumination are obscured by smoke or are inoperative.

(b) *Visual identity and recognition.* The LLEEPM system shall be conspicuous (*i.e.,* clearly recognizable/distinguishable), or become conspicuous immediately and automatically from a low-location upon loss of power for normal lighting, and under the minimum general emergency light illumination levels as specified in § 299.423.

(c) *Signage and markings.* At a minimum, the LLEEPM system shall have the following three components:

(1) *Primary door exit signs.* (i) Each primary door exit shall be clearly marked with an exit sign;

(ii) The exit sign shall be visible from a low-location from the exit along the exit path; and

(iii) Each exit sign shall be located on or immediately adjacent to each door and placed between 152.4 and 457.2 mm (6 and 18 inches) above the floor.

(2) *Primary door exit marking/delineators.* (i) The location of the exit path shall be marked using electrically powered (active) marking/delineators or light fixtures, HPPL (passive) marking/delineators or a combination of these two systems.

(ii) The requirements in this section apply for both electrical and HPPL components, whether installed on the walls, floors, or seat assemblies.

(iii) Each primary door shall be marked on or around the door's operating handle.

(3) *Exit path marking/delineators.* (i) The marking/delineator components shall be positioned so as to identify an exit path to all primary exits that is clearly visible and easily recognizable from any seat or compartment in the trainset, when normal lighting and emergency lighting are unavailable in conditions of darkness and/or smoke.

(ii) Markings/delineators shall be located on the floor or no higher than 457.2 mm (18 inches) on the seat assembly, or walls/partitions of aisles, and/or passageways.

(iii) Changes in the direction of the exit path shall be indicated by the LLEEPM and be placed within 102 mm (4 inches) of the corner of the exit path.

(d) *Material*—(1) *HPPL passive systems.* HPPL strip marking/delineator material used for LLEEPM components shall be capable of providing a minimum luminance level of 7.5 mcd/m^2, measured 90 minutes after normal power has ceased.

(2) *Electroluminescent marking/delineator strips.* The luminance value of the electroluminescent (EL) marking/delineator strip shall be at least 1,000 mcd/m^2, as measured on the strip surface.

(e) *Conspicuity of markings.* LLEEPM signs shall comply with the text, color and respective illuminance or luminance requirements specified in § 299.423 and in this section.

(f) *Emergency performance duration.* The LLEEPM system shall operate independently of the car's normal and emergency lighting systems for 90 minutes after loss of all power for normal lighting.

(g) *Recordkeeping.* (1) The railroad shall retain a copy of the car manufacturer/supplier provided certified independent laboratory test report results showing that the illuminance or luminance measurements, as appropriate, on the active area of the signage/marking/delineator component comply with the criteria specified in § 299.423 and in this section.

(2) The railroad shall retain a copy of the railroad-approved illuminance test plan(s) and test results until the next periodic test, or other test specified in accordance with the railroad's inspection, testing, and maintenance program and ensure that tests are conducted on a representative car, or until all cars of that type are retired, transferred, leased, or conveyed to another railroad. A copy of such records shall be provided to the accepting railroads along with any car(s) that are transferred, leased, or conveyed.

(3) Illegible, broken, damaged, missing, or non-functioning components of the LLEEPM system, including the normal and emergency power systems, shall be reported and repaired in accordance with the railroad's inspection, testing, and maintenance program as specified in § 299.445.

§ 299.427 Emergency egress windows.

(a) *Number and location.* Each unit in a trainset shall have a minimum of four emergency window exits. At least one emergency window exit shall be located in each side of each end (half) of the car, in a staggered configuration where practicable. (See Figure 3 to this paragraph.)

Figure 8 to paragraph (a) - Example of Location and Staggering of Emergency Window Exists and Access—Top and Side View Depictions

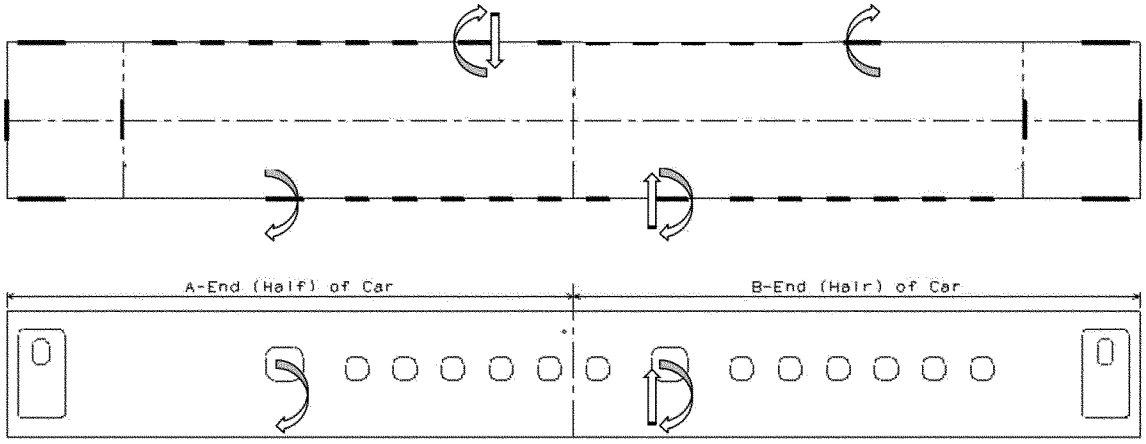

(b) *Ease of operability.* Each emergency egress window exit shall be designed to permit rapid and easy removal from the inside of the car during an emergency situation using a hammer designed to break the glazing that shall be located adjacent to each emergency window. The railroad shall inspect for the presence of the emergency hammers each day prior to the trainset being placed into service in accordance with § 299.711(b).

(c) *Dimensions.* Except as provided in paragraph (c)(1) of this section, each emergency egress window in a passenger car shall have an unobstructed opening with minimum dimensions of 660 mm (26 inches) horizontally by 610 mm (24 inches) vertically. A seatback is not an obstruction if it can be moved away from the window opening without using a tool or other implement.

(d) *Marking and instructions.* (1) Each emergency window exit shall be conspicuously and legibly marked with luminescent material on the inside of each car to facilitate passenger egress as specified in § 299.423.

(2) Legible and understandable operating instructions, including instructions for removing the window shall be made of luminescent material, shall be posted at or near each such window exit as specified in § 299.423.

(e) *Obstructions.* If window removal may be hindered by the presence of a seatback, headrest, luggage rack, or other fixture, the instructions shall state the method for allowing rapid and easy removal of the window, taking into account the fixture(s), and this portion of the instructions may be in written or pictorial format.

(f) *Additional emergency window exits.* Any emergency window exit in addition to the minimum number required by paragraph (a) of this section that has been designated for use by the railroad need not comply with the minimum dimension requirements in paragraph (c) of this section, but must otherwise comply with all requirements in this subpart applicable to emergency egress window.

§ 299.429 Rescue access windows.

(a) *General.* Each emergency egress window required by § 299.427 shall also serve as a means of rescue access.

(b) *Ease of operability.* Each rescue access window must be capable of being removed without unreasonable delay by an emergency responder using tools or implements that are commonly available to the responder in a passenger trainset emergency.

(c) *Marking and instructions.* (1) Each rescue access window shall be marked with retroreflective material on the exterior of each car as specified in § 299.423. A unique and easily recognizable symbol, sign, or other conspicuous marking shall also be used to identify each such window.

(2) Legible and understandable window-access instructions, including instructions for removing the window, shall be posted at or near each rescue

access window as specified in § 299.423.

§ 299.431 Driver's controls and cab layout.

(a) *Driver controls and cab layout.* Driver controls and cab layout shall replicate that used in the N700, unless otherwise approved by FRA.

(b) *Cab seating.* Each seat provided for an employee regularly assigned to occupy a cab and any floor-mounted seat in the cab shall be securely attached in accordance with § 299.405.

(c) *Cab interior surface.* Sharp edges and corners shall be eliminated from the interior of the cab, and interior surfaces of the cab likely to be impacted by an employee during a collision or derailment shall be padded with shock-absorbent material.

(d) *Cab securement.* Trainset interior cab doors shall be equipped with the following:

(1) A secure and operable device to lock the door from the outside that does not impede egress from the cab; and

(2) A securement device on each cab door that is capable of securing the door from inside of the cab.

(e) *Cab glazing serviceability.* End-facing cab windows of the lead trainset cab shall be free of cracks, breaks, or other conditions that obscure the view of the right-of-way for the crew from their normal position in the cab.

(f) *Floors of cabs, passageways, and compartments.* Floors of cabs, passageways, and compartments shall be kept free from oil, water, waste or any obstruction that creates a slipping, tripping or fire hazard. Floors shall be properly treated to provide secure footing.

(g) *Cab environmental control.* Each lead cab in a trainset shall be heated and air conditioned. The HVAC system shall be inspected and maintained to ensure that it operates properly and meets the railroad's performance standard which shall be defined in the inspection, testing, and maintenance program.

(h) *Trainset cab noise.* Performance standards for the railroad's trainsets:

(1) The average noise levels in the trainset cab shall be less than or equal to 85 dB(A) when the trainset is operating at maximum approved trainset speed as approved under § 299.609(g). Compliance with this paragraph (h)(1) shall be demonstrated during the trainset qualification testing as required by § 299.607.

(2) The railroad shall not make any alterations during maintenance or modifications to the cab, that cause the average sound level to exceed the requirements in paragraph (1) of this section.

(3) The railroad or manufacturer shall follow the test protocols set forth in appendix C to this part to determine compliance with paragraph (l)(1) of this section, and, to the extent reasonably necessary to evaluate the effect of alterations during maintenance, to determine compliance with paragraph (l)(2) of this section.

(i) *Maintenance of trainset cabs.* (1) If the railroad receives an excessive noise report, and if the condition giving rise to the noise is not required to be immediately corrected under this part, the railroad shall maintain a record of the report, and repair or replace the item identified as substantially contributing to the noise:

(i) On or before the next periodic inspection required by the railroad's inspection, testing, and maintenance program under subpart G; or

(ii) If the railroad determines that the repair or replacement of the item requires significant shop or material resources that are not readily available, at the time of the next major equipment repair commonly used for the particular type of maintenance needed.

(2) The railroad has an obligation to respond to an excessive noise report that a trainset-cab-occupant files. The railroad meets its obligation to respond to an excessive noise report, as set forth in paragraph (m)(1) of this section, if the railroad makes a good faith effort to identify the cause of the reported noise, and where the railroad is successful in determining the cause, if the railroad repairs or replaces the items that cause the noise.

(3)(i) The railroad shall maintain a written or electronic record of any excessive noise report, inspection, test, maintenance, replacement, or repair completed pursuant to paragraph (m) of this section, and the date on which that inspection, test, maintenance, replacement, or repair occurred. If the railroad elects to maintain an electronic record, the railroad must satisfy the conditions listed in § 299.11.

(ii) The railroad shall retain these records for a period of one year.

(iii) The railroad shall establish an internal, auditable, monitorable system that contains these records.

(m) *Trainset sanitation facilities for employees.* Sanitation facilities shall be provided for crewmembers either:

(1) On the trainset, that meet otherwise applicable sanitation standards, which are accessible at frequent intervals during the course of their work shift; or

(2) Ready access to railroad-provided sanitation facilities outside of the trainset.

(j) *Speed indicators.* (1) Each trainset controlling cab shall be equipped with a speed indicator which is—

(i) Accurate within ± 2 km/h (1.24 miles per hour) for speed lower than 30 km/h (18.6 miles per hour), then increasing linearly up to ± 12 km/h (7.5 miles per hour) at 500 km/h (311 miles per hour); and

(ii) Clearly readable from the driver's normal position under all light conditions.

(2) The speed indicator shall be based on a system of independent on-board speed measurement sources guaranteeing the accuracy level specified in paragraph (a)(1) of this section under all operational conditions. The system shall be automatically monitored for inconsistencies and the engineer shall be automatically notified of any inconsistency potentially compromising this accuracy level.

(3) The speed indicator shall be calibrated periodically as defined in the railroad's inspection, testing, and maintenance program.

(k) *Cab lights.* (1) Each trainset cab shall have cab lights which will provide sufficient illumination for the control instruments, meters, and gauges to enable the driver to make accurate readings from his or her normal positions in the cab. These lights shall be located, constructed, and maintained so that light shines only on those parts requiring illumination and does not interfere with the driver's vision of the track and signals. Each trainset cab shall also have a conveniently located light that can be readily turned on and off by the driver operating the trainset and that provides sufficient illumination for them to read trainset orders and timetables.

(2) Cab passageways and compartments shall be illuminated.

§ 299.433 Exterior lights.

(a) *Headlights.* Each leading end of a trainset shall be equipped with two or more headlights.

(1) Each headlight shall produce 80,000 candela.

(2) Headlights shall be arranged to illuminate signs in the right-of-way.

(3) Headlights shall be recognized 600 m (1,968 feet) ahead of the cab car by a driver in another trainset or a maintenance person standing in the right-of-way under clear weather conditions.

(b) *Taillights (marking devices).* (1) The trailing end of the trainset shall be equipped with two red taillights;

(2) Each taillight shall be located at least 1.2 m (3.9 feet) above rail;

(3) Each taillight shall be recognizable 200 m (656 feet) ahead of the cab car by a driver in another trainset or a maintenance person standing in the

right-of-way under clear weather conditions;

(4) Taillights of the trailing end of the trainset shall be on when the trainset is in operation;

(5) Taillights shall not be on in the direction of trainset travel, except if the driver shall re-position the trainset in a station. Such re-positioning operations shall be done in accordance with the railroad's operating rules; and

(6) In an emergency situation, the headlight on the rear of the trainset may serve as the taillights in accordance with the railroad's operating rules.

§ 299.435 Electrical system design.

(a) *Overhead collector systems.* (1) Pantographs shall be so arranged that they can be operated from the driver's normal position in the cab. Pantographs that automatically rise when released shall have an automatic locking device to secure them in the down position.

(2) Each overhead collector system, including the pantograph, shall be equipped with a means to electrically ground any uninsulated parts to prevent the risk of electrical shock when working on the system.

(3) Means shall be provided to permit the driver to determine that the pantograph is in its lowest position, and for securing the pantograph if necessary, without the need to mount the roof of the trainset.

(4) Each trainset equipped with a pantograph operating on an overhead collection system shall also be equipped with a means to safely lower the pantograph in the event of an emergency. If an emergency pole is used for this purpose, that part of the pole which can be safely handled shall be marked to so indicate. This pole shall be protected from moisture and damage when not in use. Means of securement and electrical isolation of a damaged pantograph, when it cannot be performed automatically, shall be addressed in the railroad's operating rules.

(b) *Circuit protection.* (1) Each auxiliary circuit shall be provided with a circuit breaker or equivalent current-limiting devices located as near as practicable to the point of connection to the source of power for that circuit. Such protection may be omitted from circuits controlling safety-critical devices.

(2) The 25-kV main power line shall be protected with a lightning arrestor, automatic circuit breaker, and overload relay. The lightning arrestor shall be run by the most direct path possible to ground with a connection to ground of not less than No. 6 AWG. These overload protection devices shall be housed in an enclosure designed specifically for that purpose with the arc chute vented directly to outside air.

(3) Auxiliary power supply (440 VAC), providing power distribution, shall be provided with both overload and ground fault protection.

(c) *Main battery system.* (1) The main batteries shall be isolated from the cab and passenger seating areas by a non-combustible barrier.

(2) If batteries are of the type to potentially vent explosive gases, the batteries shall be adequately ventilated to prevent accumulation of explosive concentrations of these gases.

(3) Battery chargers shall be designed to protect against overcharging.

(4) Battery circuits shall include an emergency battery cut-off switch to completely disconnect the energy stored in the batteries from the load.

(d) *Capacitors for high-energy storage.* (1) Capacitors, if provided, shall be isolated from the cab and passenger seating areas by a non-combustible barrier.

(2) Capacitors shall be designed to protect against overcharging and overheating.

(e) *Electromagnetic interference (EMI) and electromagnetic compatibility (EMC).* (1) The railroad shall ensure electromagnetic compatibility of the safety-critical equipment systems with their environment. Electromagnetic compatibility can be achieved through equipment design or changes to the operating environment.

(2) The electronic equipment shall not produce electrical noise that interferes with trainline control and communications or with wayside signaling systems.

(3) To contain electromagnetic interference emissions, suppression of transients shall be at the source wherever possible.

(4) Electrical and electronic systems of equipment shall be capable of operation in the presence of external electromagnetic noise sources.

(5) All electronic equipment shall be self-protected from damage or improper operation, or both, due to high voltage transients and long-term over-voltage or under-voltage conditions. This includes protection from both power frequency and harmonic effects as well as protection from radio frequency signals into the microwave frequency range.

(f) *Insulation or grounding of metal parts.* All unguarded noncurrent-carrying metal parts subject to becoming charged shall be grounded or thoroughly insulated.

(g) *High voltage markings: Doors, cover plates, or barriers.* External surfaces of all doors, cover plates, or barriers providing direct access to high voltage equipment shall be conspicuously and legibly marked ''DANGER–HIGH VOLTAGE'' or with the word ''DANGER'' and the normal voltage carried by the parts so protected. Labels shall be retro-reflective.

(h) *Hand-operated switches.* All hand-operated switches carrying currents with a potential of more than 150 volts that may be operated while under load shall be covered and shall be operative from the outside of the cover. Means shall be provided to show whether the switches are open or closed. Switches that should not be operated while under load shall be conspicuously and legibly marked with the words ''must not be operated under load'' and the voltage carried.

(i) *Conductors; jumpers; cable connections.* (1) Conductor sizes shall be selected on the basis of current-carrying capacity, mechanical strength, temperature, flexibility requirements, and maximum allowable voltage drop. Current-carrying capacity shall be derated for grouping and for operating temperature.

(2) Jumpers and cable connections between trainset units shall be located and guarded to provide sufficient vertical clearance. They may not hang with one end free.

(3) Cable and jumper connections between trainset units may not have any of the following conditions:

(i) Broken or badly chafed insulation;

(ii) Broken plugs, receptacles, terminals, or trainline pins; and

(iii) Broken or protruding strands of wire.

(j) *Traction motors.* All traction motors shall be in proper working order, or safely cut-out.

§ 299.437 Automated monitoring.

(a) Each trainset shall be equipped to monitor the performance of the following systems or components:

(1) Reception of cab and trainset control signals;

(2) Electric brake status;

(3) Friction brake status;

(4) Fire detection systems, if so equipped;

(5) Auxiliary power status;

(6) Wheelslide;

(7) On-board bearing-temperature sensors;

(8) Door open/closed status; and,

(9) Bogie vibration detection.

(b) When any of the monitored parameters are out of predetermined limits, an alert shall be sent immediately to the driver. The railroad's operating rules shall control trainset movement when the monitored parameters are out of predetermined limits.

(c) The railroad shall develop appropriate operating rules to address driver and equipment performance in the event that the automatic monitoring system becomes defective.

(d) The monitoring system shall be designed with an automatic self-test feature that notifies the driver that the monitoring capability is functioning correctly and alerts the driver when a system failure occurs.

§ 299.439 Event recorders.

(a) *Duty to equip and record.* Each trainset shall be equipped with an operative event recorder that monitors and records as a minimum all safety data required by paragraph (b) of this section. The event recorder shall record the most recent 48 hours of operational data of the trainset on which it is installed.

(b) *Equipment requirements.* Event recorders shall monitor and record data elements or information needed to support the data elements required by this paragraph. The data shall be recorded with at least the accuracy required of the indicators displaying any of the required data elements to the driver.

(c) *Data elements.* The event recorder shall be equipped with a certified crashworthy event recorder memory module that meets the requirements of appendix B to this part. The certified event recorder memory module shall be mounted for its maximum protection. The event recorder shall record, and the certified crashworthy event recorder memory module shall retain, the following data elements or information needed to support the data elements:

(1) Trainset speed;

(2) Selected direction of motion;

(3) Date and time;

(4) Distance traveled;

(5) Throttle position;

(6) Applications and operations of the trainset brake system, including urgent and emergency applications. The system shall record, or provide a means of determining, that a brake application or release resulted from manipulation of brake controls at the position normally occupied by the driver. In the case of a brake application or release that is responsive to a command originating from or executed by an on-board computer (*e.g.,* electronic braking system controller, controlling cab electronic control system, or trainset control computer), the system shall record, or provide a means of determining, the involvement of any such computer;

(7) Applications and operations of the regenerative brake;

(8) Cab signal aspect(s);

(9) Urgent brake application(s);

(10) Passenger brake alarm request;

(11) Wheel slip/slide alarm activation (with a property-specific minimum duration);

(12) Trainset number;

(13) Trainset tractive effort (positive and negative);

(14) Trainset brake cylinder pressures;

(15) Cruise control on/off, if so equipped and used;

(16) Bogie vibration detection;

(17) Door status opened/closed; and

(18) Safety-critical trainset control data routed to the controlling driver's display with which the driver is required to comply, specifically including text messages conveying mandatory directives and maximum authorized speed. The specific information format, content, and proposed duration for retention of such data shall be specified in the PTC Safety Plan submitted for the trainset control system under subpart B, subject to FRA approval. If it can be calibrated against other data required by this part, such trainset control data may, at the election of the railroad, be retained in a separate certified crashworthy memory module.

(d) *Response to defective equipment.* A trainset on which the event recorder has been taken out of service may remain in-service only until the next pre-service inspection. A trainset with an inoperative event recorder is not deemed to be in improper condition, unsafe to operate, or a non-complying trainset under § 299.447.

(e) *Annual tests.* (1) The railroad's inspection, testing, and maintenance program under subpart H of this part shall require annual testing of the event recorder. All testing under this section shall be performed at intervals that do not exceed 368 calendar days.

(2) A microprocessor-based event recorder with a self-monitoring feature equipped to verify that all data elements required by this part are recorded, requires further maintenance and testing only if either of the following conditions exist:

(i) The self-monitoring feature displays an indication of a failure. If a failure is displayed, further maintenance and testing must be performed until a subsequent test is successful. When a successful test is accomplished, a record, in any medium, shall be made of that fact and of any maintenance work necessary to achieve the successful result. This record shall be available at the location where the trainset is maintained until a record of a subsequent successful test is filed; or,

(ii) A download of the event recorder, taken within the preceding 30 days and reviewed for the previous 48 hours of trainset operation, reveals a failure to record a regularly recurring data element or reveals that any required data element is not representative of the actual operations of the trainset during this time period. If the review is not successful, further maintenance and testing shall be performed until a subsequent test is successful. When a successful test is accomplished, a record, in any medium, shall be made of that fact and of any maintenance work necessary to achieve the successful result. This record shall be kept at the location where the trainset is maintained until a record of a subsequent successful test is filed. The download shall be taken from information stored in the certified crashworthy crash hardened event recorder memory module.

(f) *Preserving accident data.* If any trainset equipped with an event recorder, or any other trainset mounted recording device or devices designed to record information concerning the functioning of a trainset, is involved in an accident/incident that is required to be reported to FRA under part 225 of this chapter, the railroad shall, to the extent possible, and to the extent consistent with the safety of life and property, preserve the data recorded by each such device for analysis by FRA in accordance with § 299.11. This preservation requirement permits the railroad to extract and analyze such data, provided the original downloaded data file, or an unanalyzed exact copy of it, shall be retained in secure custody and shall not be utilized for analysis or any other purpose except by direction of FRA or the National Transportation Safety Board. This preservation requirement shall expire one (1) year after the date of the accident/incident unless FRA or the Board notifies the railroad in writing that the data are desired for analysis.

(g) *Relationship to other laws.* Nothing in this section is intended to alter the legal authority of law enforcement officials investigating potential violation(s) of Federal or State criminal law(s), and nothing in this chapter is intended to alter in any way the priority of National Transportation Safety Board investigations under 49 U.S.C. 1131 and 1134, nor the authority of the Secretary of Transportation to investigate railroad accidents under 49 U.S.C. 5121, 5122, 20107, 20111, 20112, 20505, 20702, 20703, and 20902.

(h) *Disabling event recorders.* Except as provided in paragraph (d) of this section, any individual who willfully disables an event recorder, or who tampers with or alters the data recorded by such a device is subject to civil

penalty as provided in part 218 of this chapter, and to disqualification from performing safety-sensitive functions on a railroad under subpart D of part 209 of this chapter.

§ 299.441 Trainset electronic hardware and software safety.

(a) *Purpose and scope.* The requirements of this section apply to all safety-critical electronic control systems, subsystems, and components on the trainsets, except for on-board signaling and trainset control system components that must meet the software safety requirements defined in subpart B of this part.

(b) *Applicability.* (1) The trainsets shall utilize the service-proven safety-critical electronic control systems, subsystems, and components as used on the N700 to control and monitor safety-critical components.

(2) Any modifications to the existing service-proven safety-critical electronic control systems, subsystems, and components shall be subject to the requirements defined in paragraph (c) of this section.

(i) The railroad shall assure that the suppliers of new or modified safety-critical systems, subsystems, and components utilize an industry recognized hardware and software development process which is evaluated and certified by an independent third-party assessor authorized by the industry standard utilized.

(ii) The railroad shall require that all suppliers submit the certifications and audit results as applicable. All such certifications shall be made available to FRA upon request.

(3) Any major upgrades or introduction of new safety-critical technology shall be subject to § 299.613(d).

(c) *Electronic hardware and software safety program.* The railroad shall develop and maintain a written electronic hardware and software safety program to guide the design, development, testing, integration, and verification of all new or modified safety-critical trainset hardware and software.

(1) *Hardware and software safety program description.* The hardware and software safety program shall include a description of how the following will be implemented to ensure safety and reliability:

(i) The hardware and software design process;

(ii) The hardware and software design documentation;

(iii) The hardware and software hazard analysis;

(iv) Hardware and software safety reviews;

(v) Hardware and software hazard monitoring and tracking;

(vi) Hardware and software integration safety testing;

(vii) Demonstration of overall hardware and software system safety as part of the pre-revenue service testing of the equipment; and

(viii) Safety-critical changes and failures.

(2) *Safety analysis.* The hardware and software safety program shall be based on a formal safety methodology that includes a FMECA; verification and validation testing for all hardware and software components and their interfaces; and comprehensive hardware and software integration testing to ensure that the hardware and software system functions as intended.

(3) *Compliance.* The railroad shall comply with the elements of its hardware and software safety program that affect the safety of the passenger trainset.

(4) *Safety-critical changes and failures.* Whenever a planned safety-critical design change is made to the safety-critical electronic control systems, subsystems and components (the products) that are in use by the railroad and subject to this subpart, the railroad shall—

(i) Notify FRA in accordance with § 299.9 of the design changes made by the product supplier;

(ii) Ensure that the safety analysis required under paragraph (c)(2) of this section is updated as required;

(iii) Conduct all safety-critical changes in a manner that allows the change to be audited;

(iv) The railroad shall document all arrangements with suppliers for notification of all electronic safety-critical changes as well as safety-critical failures in the supplier's system, subsystem, or components, and the reasons for that change or failure from the suppliers, whether or not the railroad has experienced a failure of that safety-critical system, sub-system, or component;

(v) Specify the railroad's procedures for action upon receipt of notification of a safety-critical change or failure of an electronic system, sub-system, or component, and until the upgrade or revision has been installed;

(vi) Identify all configuration/revision control measures designed to ensure that safety-functional requirements and safety-critical hazard mitigation processes are not compromised as a result of any such change, and that any such change can be audited; and,

(vii) The railroad shall require suppliers to provide notification of all electronic safety-critical changes as well as safety-critical failures in the supplier's system, subsystem, or components;

(viii) The reasons shall be identified for that change or failure from the suppliers, whether or not the railroad has experienced a failure of that safety-critical system, sub-system, or component; and,

(ix) The railroad shall document all arrangements with suppliers for notification of any and all electronic safety-critical changes as well as safety-critical failures in the supplier's system, subsystem, or components.

(d) *Specific requirements.* Hardware and software that controls or monitors a trainset's primary braking system shall either—

(1) Fail safely by initiating an emergency or urgent brake application in the event of a hardware or software failure that could impair the ability of the driver to apply or release the brakes; or

(2) Provide the driver access to direct manual control of the primary braking system (emergency or urgent braking).

(e) *Inspection, testing, and maintenance records.* The inspection, testing, and maintenance conducted by the railroad in accordance with § 299.445 shall be recorded in hardcopy or stored electronically. Electronic recordkeeping or automated tracking systems, subject to the provisions contained in § 299.11, may be utilized to store and maintain any testing or training record required by this subpart. Results of product testing conducted by a vendor in support of a safety analysis shall be provided to and recorded by the railroad.

(1) The testing records shall contain all of the following:

(i) The name of the railroad;

(ii) The location and date that the test was conducted;

(iii) The equipment tested;

(iv) The results of tests;

(v) The repairs or replacement of equipment;

(vi) Any preventative adjustments made; and

(vii) The condition in which the equipment is left.

(2) Each record shall be—

(i) Signed by the employee conducting the test, or electronically coded, or identified by the automated test equipment number;

(ii) Filed in the office of a supervisory official having jurisdiction, unless otherwise noted; and

(iii) Available for inspection and copying by FRA.

(3) The results of the testing conducted in accordance with this section shall be retained as follows:

(i) The results of tests that pertain to installation or modification of a product shall be retained for the life-cycle of the product tested and may be kept in any office designated by the railroad;

(ii) The results of periodic tests required for the maintenance or repair of the product tested shall be retained until the next record is filed and in no case less than one year; and

(iii) The results of all other tests and training shall be retained until the next record is filed and in no case less than one year.

(f) *Review of safety analysis.* (1) Prior to the initial planned use of a new product as defined by paragraphs (b)(2) or (3) of this section, the railroad shall notify FRA in accordance with § 299.9 of the intent to place this product in service. The notification shall provide a description of the product, and identify the location where the complete safety analysis documentation and the testing are maintained.

(2) The railroad shall maintain and make available to FRA upon request all railroad or vendor documentation used to demonstrate that the product meets the safety requirements of the safety analysis for the life-cycle of the product.

(g) *Hazard tracking.* After a new product is placed in service in accordance with paragraphs (b)(2) or (3) of this section, the railroad shall maintain a database of all safety-relevant hazards encountered with the product. The database shall include all hazards identified in the safety analysis and those that had not been previously identified in the safety analysis. If the frequency of the safety-relevant hazards exceeds the threshold set forth in the safety analysis, then the railroad shall—

(1) Report the inconsistency to the Associate Administrator, within 15 days of discovery in accordance with § 299.9;

(2) Take immediate countermeasures to reduce the frequency of the safety-relevant hazard(s) below the threshold set forth in the safety analysis; and

(3) Provide a final report to the Associate Administrator, on the results of the analysis and countermeasures taken to mitigate the hazard to meet the threshold set forth in the safety analysis when the problem is resolved. For hazards not identified in the safety analysis the threshold shall be exceeded at one occurrence.

(4) Electronic or automated tracking systems used to meet the requirements contained in paragraph (g) of this section shall be in accordance with § 299.11.

(h) *Operations and maintenance manual.* The railroad shall maintain all supplier or vendor documents pertaining to the operation, installation, maintenance, repair, modification, inspection, and testing of the safety-critical electronic control systems, subsystems and components.

(i) *Training and qualification program.* Under § 299.13(c)(3), the railroad shall establish and implement a training and qualification program for the safety-critical electronic control systems, subsystems, and components subject to subpart G of this part prior to the safety-critical electronic control systems, subsystems, and components being placed in use.

(j) *Operating personnel training.* The training program required by § 299.13(c)(3) for any driver or other person who participates in the operation of a trainset using the safety-critical electronic control systems, subsystems and components shall address all the following elements:

(1) Familiarization with the electronic control system equipment on-board the trainset and the functioning of that equipment as part of the system and in relation to other on-board systems under that person's control;

(2) Any actions required of the operating personnel to enable or enter data into the system and the role of that function in the safe operation of the trainset;

(3) Sequencing of interventions by the system, including notification, enforcement, and recovery from the enforcement as applicable;

(4) Railroad operating rules applicable to control systems, including provisions for movement and protection of any unequipped passenger equipment, or passenger equipment with failed or cut-out controls;

(5) Means to detect deviations from proper functioning of on-board electronic control system equipment and instructions explaining the proper response to be taken regarding control of the trainset and notification of designated railroad personnel; and

(6) Information needed to prevent unintentional interference with the proper functioning of on-board electronic control equipment.

§ 299.443 Safety appliances.

(a) *Couplers.* (1) The leading and trailing ends of each trainset shall be equipped with an automatic rescue coupler that couples on impact.

(i) Uncoupling of the rescue coupler shall be done only at a trainset maintenance facility or other location where personnel can safely get under or between units.

(ii) The leading and the trailing ends of a trainset are not required to be equipped with sill steps or end or side handholds.

(2) The leading and trailing end couplers and uncoupling devices may be stored within a removable shrouded housing.

(3) Leading and trailing automatic couplers of trainsets shall be compatible with the railroad's rescue vehicles. A coupler adaptor can be used to meet this requirement.

(4) The railroad shall develop and implement rescue procedures that assure employee safety during rescue operations and shall be contained in the railroad's operating rules.

(5) Each unit within a trainset shall be semi-permanently coupled and shall only be uncoupled at a trainset maintenance facility or other locations identified by the railroad where the protections afforded in subpart B of part 218 of this chapter can be applied.

(6) The ends of units in a trainset that are semi-permanently coupled are not required to be equipped with automatic couplers, sill steps, end handholds or side handholds.

(b) *Crew access.* (1) Each trainset shall provide a minimum of two (2) locations per side, where crew members can board or disembark the trainset safely from ground level.

(2) Each location used for crew access shall be equipped with retractable stairs with handrails designed for safe access to the trainset from ground level.

§ 299.445 Trainset inspection, testing, and maintenance requirements.

(a) *General.* (1) The railroad shall develop a written inspection program for the rolling stock, in accordance with and approved under the requirements of § 299.713. As further specified in this section, the program shall describe in detail the procedures, equipment, and other means necessary for the safe operation of the passenger equipment, including all inspections set forth in paragraph (e) of this section. This information shall include a detailed description of the methods of ensuring accurate records of required inspections.

(2) The initial inspection, testing, and maintenance program submitted under § 299.713 shall, as a minimum, address the specific safety inspections contained in paragraphs (e)(1) through (4) of this section. The railroad may submit the procedures detailing the bogie inspections or general overhaul requirements contained in paragraph (e)(3) and (4) of this section, respectively, at a later date than the initial inspection, testing, and maintenance program, but not less than 180 days prior to the scheduled date of the first bogie inspection or general overhaul.

(b) *Identification of safety-critical items.* In addition to safety critical items identified under § 299.711(b), on-board emergency equipment, emergency back-up systems, trainset exits and trainset safety-critical hardware and software systems in accordance with § 299.441 shall be deemed safety-critical.

(c) *Compliance.* The railroad shall adopt and comply with the approved inspection, testing, and maintenance program in accordance with § 299.703.

(d) *General condition.* The inspection, testing, and maintenance program shall ensure that all systems and components of the equipment are free of conditions that endanger the safety of the crew, passengers, or equipment. These conditions include, but are not limited to the following:

(1) A continuous accumulation of oil or grease;

(2) Improper functioning of a component;

(3) A crack, break, excessive wear, structural defect, or weakness of a component;

(4) A leak;

(5) Use of a component or system under conditions that exceed those for which the component or system is designed to operate; and

(6) Insecure attachment of a component.

(e) *Specific safety inspections.* The program under paragraph (a) of this section shall specify that all passenger trainsets shall receive thorough safety inspections by qualified individuals designated by the railroad at regular intervals. At a minimum, and in addition to the annual tests required for event recorder under § 299.439(f), the following shall be performed on each trainset:

(1) *Pre-service inspections.* (i) Each trainset in use shall be inspected at least once every two calendar days by qualified individuals at a location where there is a repair pit and access to the top of the trainset. The inspection shall verify the correct operation of on-board safety systems defined in the inspection, testing, and maintenance program. If any of the conditions defined as safety-critical in paragraph (b) of this section and § 299.711(b) are found during this inspection, the trainset shall not be put into service until that condition is rectified. The pre-service inspection shall include the following:

(A) Functional tests to determine the status of application and release of the service, emergency, and urgent air brakes using the monitoring system;

(B) Operational tests of the exterior doors; and

(C) A review of the log of on-board ATC equipment.

(ii) If the existence of any safety-critical conditions cannot be determined by use of an automated monitoring system, the railroad shall perform a visual inspection to determine if the condition exists.

(2) *Regular inspections.* The railroad shall perform a regular inspection on all trainsets in accordance with the test procedures and inspection criteria established in paragraph (a) of this section and at the intervals defined by paragraph (f) of this section. If any of the conditions defined as safety-critical in paragraph (b) of this section and § 299.711(b) are found during this inspection, the trainset shall not be put into service until that condition is rectified.

(3) *Bogie inspections.* The railroad shall perform a bogie inspection on all trainsets in accordance with the test procedures and inspection criteria established in paragraph (a) of this section and at the intervals defined by paragraph (f) of this section. If any of the conditions defined as safety-critical in paragraph (b) of this section and § 299.711(b) are found during this inspection, the trainset shall not be put into service until that condition is rectified.

(4) *General overhaul.* The railroad shall perform a general overhaul on all trainsets in accordance with the test procedures and inspection criteria established in paragraph (a) of this section and at the intervals defined by paragraph (f) of this section. If any of the conditions defined as safety-critical in paragraph (b) of this section and § 299.711(b) are found during this inspection, the trainset shall not be put into service until that condition is rectified.

(f) *Maintenance intervals.* The railroad's program established pursuant to paragraph (a) of this section shall include the railroad's scheduled maintenance intervals for all specific safety inspections in paragraph (e) of this section, as required by § 299.707.

(g) *Training and qualification program.* The railroad shall establish a training and qualification program as defined in § 299.13(c)(3) to qualify individuals to perform inspections, testing, and maintenance on the equipment. Only qualified individuals shall perform inspections, testing, and maintenance of the equipment.

(h) *Reporting and tracking of repairs to defective trainsets.* The railroad shall have in place prior to start of operations a reporting and tracking system for passenger trainsets with a defect not in conformance with this subpart. The reporting and tracking system shall record the following information:

(1) The identification number of the defective unit within a trainset, and trainset identification number;

(2) The date the defect was discovered;

(3) The nature of the defect;

(4) The determination made by a qualified individual whether the equipment is safe to run;

(5) The name of the qualified individual making such a determination;

(6) Any operating restrictions placed on the equipment; and

(7) Repairs made and the date that they were completed.

(i) *Retention of records.* At a minimum, the railroad shall keep the records described in paragraph (j) of each required inspection under this section in accordance with § 299.11. Each record shall be maintained for at least one year from the date of the inspection.

(j) *Availability of records.* The railroad shall make defect reporting and tracking records available to FRA upon request.

(k) *Brake system repair points.* The railroad shall designate brake system repair points in the inspection, testing, and maintenance program required by paragraph (a) of this section. No trainset shall depart a brake system repair point unless that trainset has a 100 percent operational brake system.

§ 299.447 Movement of defective equipment.

(a) A trainset with one or more conditions not in compliance with the list of safety critical defects identified in accordance with § 299.445(b) during a pre-service inspection required by § 299.445(e)(1) shall not be moved in revenue service and shall only be moved in accordance with paragraph (e) of this section.

(b) Except as provided in paragraph (c) of this section, and after departure in compliance with the pre-service inspection required by § 299.445(e)(1), a trainset with one or more conditions not in compliance with the list of safety critical defects identified in accordance with §§ 299.445(b) and 299.711(b) may be moved in revenue service only after the railroad has complied with all of the following:

(1) A qualified individual determines that it is safe to move the trainset, consistent with the railroad's operating rules;

(i) If appropriate, these determinations may be made based upon a description of the defective condition provided by a crewmember.

(ii) If the determinations required by this paragraph are made by an off-site qualified individual based on a

description of the defective condition by on-site personnel, then a qualified individual shall perform a physical inspection of the defective equipment, at the first location possible, in accordance with the railroad's inspection, testing, and maintenance program and operating rules, to verify the description of the defect provided by the on-site personnel.

(2) The qualified individual who made the determination in paragraph (b)(1) of this section, notifies the driver in charge of movement of the trainset, in accordance with the railroad's operating rules, of the maximum authorized speed, authorized destination, and any other operational restrictions that apply to the movement of the non-compliant trainset. This notification may be achieved through the tag required by paragraph (b)(3) of this section; and

(3) A tag bearing the words ''non-complying trainset'' and containing the following information, are securely attached to the control stand on each control cab of the trainset:

(i) The trainset number and unit or car number;

(ii) The name of the qualified individual making the determination in paragraph (b)(1) of this section;

(iii) The location and date of the inspection that led to the discovery of the non-compliant item;

(iv) A description of each defect;

(v) Movement restrictions, if any;

(vi) The authorized destination of the trainset; and,

(vii) The signature, if possible, as well as the job title and location of the person making the determinations required by this section.

(4) Automated tracking systems used to meet the tagging requirements contained in paragraph (b)(3) of this section may be reviewed and monitored by FRA at any time to ensure the integrity of the system. FRA's Associate Administrator may prohibit or revoke the railroad's ability to utilize an automated tracking system in lieu of tagging if FRA finds that the automated tracking system is not properly secure, is inaccessible to FRA or the railroad's employees, or fails to adequately track or monitor the movement of defective equipment. Such a determination will be made in writing and will state the basis for such action.

(c) A trainset that develops a non-complying condition in service may continue in revenue service, so long as the requirements of paragraph (b) of this section are otherwise fully met, until the next pre-service inspection.

(d) In the event of an in-service failure of the braking system, the trainset may proceed in accordance with the railroad's operating rules relating to the percentage of operative brakes and at a speed no greater than the maximum authorized speed as determined by § 299.409(f)(4) so long as the requirements of paragraph (b) of this section are otherwise fully met, until the next pre-service inspection.

(e) A non-complying trainset may be moved without passengers within a trainset maintenance facility, at speeds not to exceed 16 km/h (10 mph), without meeting the requirements of paragraph (a) of this section where the movement is solely for the purpose of repair. The railroad shall ensure that the movement is made safely.

(f) Nothing in this section authorizes the movement of equipment subject to a Special Notice for Repair under part 216 of this chapter unless the movement is made in accordance with the restrictions contained in the Special Notice.

Subpart E—Operating Rules

§ 299.501 Purpose.

Through the requirements of this subpart, FRA learns the condition of the operating rules and practices in use by the railroad. The rules and practices covered by this subpart include the procedures for instruction and testing of all employees involved with the movement of rail vehicles, including drivers, on-board attendants, station platform attendants, general control center staff, and all maintenance staff, which are necessary to ensure that they possess the requisite skill and knowledge of the rules and operating practices to maintain the safety of the system.

§ 299.503 Operating rules; filing and recordkeeping.

(a) Prior to commencing operations, the railroad shall develop a code of operating rules, timetables, and timetable special instructions. The initial code of operating rules, timetables, and timetable special instructions shall be based on practices and procedures proven on the Tokaido Shinkansen system.

(b) The railroad shall keep one copy of its current code of operating rules, timetables, timetable special instruction, at its system headquarters, and shall make them available to FRA for inspection and copying during normal business hours. If the railroad elects to maintain an electronic record, the railroad must satisfy the conditions listed in § 299.11.

§ 299.505 Programs of operational tests and inspections; recordkeeping.

(a) *Requirement to conduct operational tests and inspections.* The railroad shall periodically conduct operational tests and inspections to determine the extent of employee knowledge, application, and compliance with its code of operating rules, timetables, and timetable special instructions in accordance with a written program retained at its system headquarters.

(b) *Railroad and railroad testing officer responsibilities.* (1) Each railroad officer who conducts operational tests and inspections (railroad testing officer) shall—

(i) Be qualified on the railroad's operating rules in accordance with § 299.507;

(ii) Be qualified on the operational testing and inspection program requirements and procedures relevant to the testing and inspections the officer will conduct;

(iii) Receive appropriate field training, as necessary to achieve proficiency, on each operational test or inspection that the officer is authorized to conduct; and

(iv) Conduct operational tests and inspections in accordance with the railroad's program of operational tests and inspections.

(2) The railroad shall maintain a record documenting qualification of each railroad testing officer. The record shall be retained by the railroad and shall be made available to representatives of the FRA for inspection and copying during normal business hours. If the railroad elects to maintain an electronic record, the railroad must satisfy the conditions listed in § 299.11.

(c) *Written program of operational tests and inspections.* Within 30 days of commencing operations, the railroad shall have a written program of operational tests and inspections in effect. The railroad shall maintain one copy of its current program for periodic performance of the operational tests and inspections required by paragraph (a) of this section, and shall maintain one copy of each subsequent amendment to the program as amendments are made. These records shall be retained at the system headquarters of the railroad for three calendar years after the end of the calendar year to which they relate. These records shall be made available to representatives of the FRA for inspection and copying during normal business hours. The program shall—

(1) Provide for operational testing and inspection under the various operating conditions on the railroad;

(2) Describe each type of operational test and inspection adopted, including the means and procedures used to carry it out;

(3) State the purpose of each type of operational test and inspection;

(4) State the frequency with which each type of operational test and inspection is conducted;

(5) The program shall address with particular emphasis those operating rules that cause or are likely to cause the most accidents or incidents, such as those accidents or incidents identified in the six-month reviews and the annual summaries as required under paragraphs (e) and (f) of this section;

(6) Identify the officer(s) by name and job title responsible for ensuring that the program of operational tests and inspections is properly implemented and is responsible for overseeing the entire program. The responsibilities of such officer(s) shall include, but not be limited to, ensuring that the railroad's testing officers are directing their efforts in an appropriate manner to reduce accidents/incidents and that all required reviews and summaries are completed, and

(7) Include a schedule for making the program fully operative within 210 days after it begins.

(d) *Records.* (1) The railroad shall keep a written or electronic record of the date, time, place, and result of each operational test and inspection that was performed in accordance with its program. Each record shall specify the officer administering the test and inspection and each employee tested. These records shall be retained at the system headquarters of the railroad for one calendar year after the end of the calendar year to which they relate. These records shall be made available to representatives of the FRA for inspection and copying during normal business hours.

(2) The railroad shall retain one copy of its current program for periodic performance of the operational tests and inspections required by paragraph (a) of this section and one copy of each subsequent amendment to such program. These records shall be retained for three calendar years after the end of the calendar year to which they relate at the system headquarters where the tests and inspections are conducted. These records shall be made available to representatives of the FRA for inspection and copying during normal business hours.

(e) *Reviews of tests and inspections and adjustments to the program of operational tests*—(1) *Reviews by the railroad.* Not less than once every 180 days the railroad's designated officer(s) shall conduct periodic reviews and analyses as provided in this paragraph and shall retain, at its system headquarters, one copy of the reviews. Each such review shall be completed within 30 days of the close of the period. The designated officer(s) shall conduct a written review of—

(i) The operational testing and inspection data for the system to determine compliance by the railroad testing officers with its program of operational tests and inspections required by paragraph (c) of this section. At a minimum, this review shall include the name of each railroad testing officer, the number of tests and inspections conducted by each officer, and whether the officer conducted the minimum number of each type of test or inspection required by the railroad's program;

(ii) Accident/incident data, the results of prior operational tests and inspections, and other pertinent safety data for the system to identify the relevant operating rules related to those accidents/incidents that occurred during the period. Based upon the results of that review, the designated officer(s) shall make any necessary adjustments to the tests and inspections required of railroad officers for the subsequent period(s); and

(iii) Implementation of the program of operational tests and inspections from a system perspective, to ensure that it is being utilized as intended, that the other reviews provided for in this paragraph have been properly completed, that appropriate adjustments have been made to the distribution of tests and inspections required, and that the railroad testing officers are appropriately directing their efforts.

(2) *Records retention.* The records of reviews required in paragraphs (e)(1) of this section shall be retained for a period of one year after the end of the calendar year to which they relate and shall be made available to representatives of FRA for inspection and copying during normal business hours.

(f) *Annual summary on operational tests and inspections.* Before March 1 of each calendar year, the railroad shall retain, at its system headquarters, one copy of a written summary of the following with respect to its previous year's activities: The number, type, and result of each operational test and inspection that was conducted as required by paragraphs (a) and (b) of this section. These records shall be retained for three calendar years after the end of the calendar year to which they relate and shall be made available to representatives of FRA for inspection and copying during normal business hours.

(g) *Electronic recordkeeping.* Nothing in this section precludes the railroad from maintaining the information required to be retained under this part in an electronic format provided that the railroad satisfy the conditions listed in § 299.11.

(h) *Disapproval of program.* Upon review of the program of operational tests and inspections required by this section, the Associate Administrator for Safety may, for cause stated, disapprove the program in whole or in part. Notification of such disapproval shall be made in writing and specify the basis for the disapproval decision. If the Associate Administrator for Safety disapproves the program—

(1) The railroad has 35 days from the date of the written notification of such disapproval to—

(i) Amend its program; or

(ii) Provide a written response in support of the program to the Associate Administrator for Safety. If the Associate Administrator for Safety still disapproves the program in whole or in part after receiving the railroad's written response, the railroad shall amend its program.

(2) A failure to adequately amend the program will be considered a failure to implement a program under this subpart.

§ 299.507 Program of instruction on operating rules; recordkeeping.

(a) To ensure that each railroad employee whose activities are governed by the railroad's operating rules understands those rules, the railroad shall periodically instruct each such employee on the meaning and application of its operating rules with a written program developed under § 299.13(c)(3) and retained at its system headquarters.

(b) Prior to commencing operations, the railroad shall file and retain one copy of its current program for the periodic instruction of its employees as required by paragraph (a) of this section and shall file and retain one copy of any amendment to that program as amendments are made. These records shall be retained at the railroad's system headquarters for one calendar year after the end of the calendar year to which they relate. These records shall be made available to representatives of the FRA for inspection and copying during normal business hours. This program shall—

(1) Describe the means and procedures used for instruction of the various classes of affected employees;

(2) State the frequency of instruction and the basis for determining that frequency;

(3) Include a schedule for completing the initial instruction of employees who are already employed when the program begins;

(4) Begin on the date of commencing operations; and

(5) Provide for initial instruction of each employee hired after the program begins.

(c) The railroad is authorized to retain by electronic recordkeeping its program for periodic instruction of its employees on operating rules, provided that the requirements stated in § 299.11 are satisfied.

Subpart F—System Qualification Tests

§ 299.601 Responsibility for verification demonstrations and tests.

The railroad shall comply with the pre-revenue qualification tests and verification requirements set forth in this subpart to demonstrate the overall safety of the system, prior to revenue operations.

§ 299.603 Preparation of system-wide qualification test plan.

(a) Prior to execution of any tests as defined in this subpart, the railroad shall develop a system-wide qualification test plan, that identifies the tests that will be carried out, to demonstrate the operability of all system elements, including track and infrastructure, signal and train control, communications, rolling stock, software, and operating practices, and the system as a whole.

(b) The system-wide qualification test plan shall be submitted to FRA in accordance with § 299.9 for review at least 180 days prior to testing. FRA shall notify the railroad, in writing, within 45 days of receipt of the railroad's submission, and identify any deficiencies in the test plan. FRA will notify the railroad of any procedures to be submitted for review. The plan shall include the following:

(1) A list of all tests to be conducted;

(2) A summary statement of the test objectives;

(3) A planned schedule for conducting the tests which indicates the sequence of testing and interdependencies; and

(4) The approach taken for—

(i) Verifying results of installation tests performed by contractors and manufacturers;

(ii) Functional and performance qualification testing of individual safety-related equipment, facilities, and subsystems in accordance with § 299.605;

(iii) Pre-revenue service systems integration testing of the system per § 299.607, that includes vehicle/track system qualification testing per § 299.609;

(iv) Simulated revenue operations of the system per § 299.611;

(v) Compliance with operating rules as per subpart E of this part;

(vi) Training and qualification of all personnel involved in the test program to conduct tests safely and in accordance with operating rules;

(vii) Verification of all emergency preparedness procedures; and,

(viii) Field testing of the railroad's uncertified PTC system and regression testing of its FRA-certified PTC system, under § 299.201.

(c) The railroad shall adopt and comply with the system-wide qualification test plan, including completion of all tests required by the plan.

(d) After FRA review of the system-wide test plan, detailed test procedures as required by paragraph (b) of this section shall be submitted 15 days prior to testing to FRA in accordance with § 299.9 for review.

(e) Each test procedure shall include the following elements:

(1) A clear statement of the test objectives. One of the principal test objectives shall be to demonstrate that the railroad's system meets the safety design and performance requirements specified in this part when operated in the environment in which it will be used;

(2) Any special safety precautions to be observed during the testing;

(3) A description of the railroad property or facilities to be used to conduct the tests;

(4) Prerequisites for conducting each test;

(5) A detailed description of how the tests are to be conducted. This description shall include—

(i) An identification of the systems and equipment to be tested;

(ii) The method by which the systems and equipment shall be tested;

(iii) The instrumentation to be used and calibration procedures;

(iv) The means by which the test results will be recorded, analyzed and reported to FRA;

(v) A description of the information or data to be obtained;

(vi) A description of how the information or data obtained is to be analyzed or used;

(vii) A description of any criteria to be used as safety limits during the testing;

(viii) The criteria to be used to evaluate the systems' and equipments' performance. If system qualification is to be based on extrapolation of less than full-level testing results, the analysis done to justify the validity of the extrapolation shall be described; and

(ix) Inspection, testing, and maintenance procedures to be followed to ensure that testing is conducted safely.

(f) The railroad shall provide FRA notice at least 30 days in advance of the times and places of any domestic testing and notice at least 90 days in advance for testing not conducted domestically to permit FRA observation of such tests.

§ 299.605 Functional and performance qualification tests.

The railroad shall conduct functional and performance qualification tests, prior to commencing revenue operations, to verify that all safety-critical components meet all functional and all performance specifications.

§ 299.607 Pre-revenue service system integration testing.

(a) Prior to commencing revenue operations, the railroad shall conduct tests of the trainsets throughout the system to—

(1) Verify mechanical positioning of the overhead catenary system; and

(2) Verify performance of the trainset, track, and signal and trainset control systems.

(b) The railroad shall demonstrate safe operation of the system during normal and degraded-mode operating conditions. At a minimum, the following operation tests shall be performed:

(1) Slow-speed operation of a trainset;

(2) Verification of correct overhead catenary and pantograph interaction;

(3) Verification of trainset clearance at structures and passenger platforms;

(4) Incremental increase of trainset speed;

(5) Performance tests on trainsets to verify braking rates in accordance with § 299.409;

(6) Verification of vehicle noise;

(7) Verification of correct vehicle suspension characteristics;

(8) Vehicle/track system qualification as defined in § 299.609;

(9) Load tests with vehicles to verify relay settings and signal and communication system immunization;

(10) Monitoring of utility supply circuits and telephone circuits to ensure the adequacy of power supplies, and to verify that transient-related disturbances are within acceptable limits;

(11) Verification of vehicle detection due to shunting of signal system circuits;

(12) Verification of safe operation of the signal and trainset control system as required by subpart B of this part;

(13) Tests of trainset radio reception during system-wide vehicle operation; and

(14) Verification of EMI/EMC compatibility between various subsystems.

§ 299.609 Vehicle/track system qualification.

(a) *General.* All vehicles intended to operate in revenue service shall be qualified for operation in accordance with this subpart. A qualification program shall be used to demonstrate that the vehicle/track system will not exceed the wheel/rail force safety limits, and the carbody and bogie acceleration criteria specified in paragraph (h) of this section—

(1) At any speed up to and including 10 km/h (6 mph) above the proposed maximum operating speed; and

(2) On track meeting the requirements for the class of track associated with the proposed maximum operating speed as defined in § 299.309. For purposes of qualification testing, speeds may exceed the maximum allowable operating speed for the class of track in accordance with the test plan approved by FRA.

(b) *New vehicle/track system qualification.* Vehicle types not previously qualified under this subpart shall be qualified in accordance with the requirements of this paragraph (b).

(1) *Carbody acceleration.* For vehicle types intended to operate in revenue service at track class H4 speeds or above, qualification testing conducted over a representative segment of the route shall demonstrate that the vehicle type will not exceed the carbody lateral and vertical acceleration safety limits specified in paragraph (h) of this section.

(2) *Bogie lateral acceleration.* For vehicle types intended to operate at track class H4 speeds or above, qualification testing conducted over a representative segment of the route shall demonstrate that the vehicle type will not exceed the bogie lateral acceleration safety limit specified in paragraph (h) of this section.

(3) *Measurement of wheel/rail forces.* For vehicle types intended to operate at track class H4 speeds or above, qualification testing conducted over a representative segment of the route shall demonstrate that the vehicle type will not exceed the wheel/rail force safety limits specified in paragraph (h) of this section.

(c) *Previously qualified vehicle/track system.* Vehicle/track systems previously qualified under this subpart for a track class and cant deficiency on one route may be qualified for operation at the same class and cant deficiency on another route through testing to demonstrate compliance with paragraph (a) of this section in accordance with the following:

(1) *Carbody acceleration.* For vehicle types intended to operate at track class H4 speeds and above, qualification testing conducted over a representative segment of the new route shall demonstrate that the vehicle type will not exceed the carbody lateral and vertical acceleration safety limits specified in paragraph (h) of this section.

(2) *Bogie lateral acceleration.* For vehicle types intended to operate at track class H4 speeds or above, measurement of bogie lateral acceleration during qualification testing shall demonstrate that the vehicle type will not exceed the bogie lateral acceleration safety limit specified in paragraph (h) of this section. Measurement of bogie lateral acceleration, if conducted, shall be performed over a representative segment of the new route.

(d) *Vehicle/track system qualification testing plan.* To obtain the data required to support the qualification program outlined in paragraphs (b) and (c) of this section, the railroad shall submit a qualification testing plan as required by § 299.603(b) at least 60 days prior to testing, requesting approval to conduct the testing at the desired speeds and cant deficiencies. This test plan shall provide for a test program sufficient to evaluate the operating limits of the track and vehicle type and shall include—

(1) Identification of the representative segment of the route for qualification testing;

(2) Consideration of the operating environment during qualification testing, including operating practices and conditions, the signal system, and trainset on adjacent tracks;

(3) The maximum angle found on the gauge face of the designed (newly-profiled) wheel flange referenced with respect to the axis of the wheelset that will be used for the determination of the Single Wheel L/V Ratio safety limit specified in paragraph (h) of this section; and

(4) A target maximum testing speed in accordance with paragraph (a) of this section and the maximum testing cant deficiency.

(e) *Qualification testing.*Upon FRA approval of the vehicle/track system qualification testing plan, qualification testing shall be conducted in two sequential stages as required in this subpart.

(1) Stage-one testing shall include demonstration of acceptable vehicle dynamic response of the subject vehicle as speeds are incrementally increased—

(i) On a segment of tangent track, from acceptable track class H4 speeds to the target maximum test speed; and

(ii) On a segment of curved track, from the speeds corresponding to 76 mm (3 inches) of cant deficiency to the maximum testing cant deficiency.

(2) When stage-one testing has successfully demonstrated a maximum safe operating speed and cant deficiency, stage-two testing shall commence with the subject equipment over a representative segment of the route as identified in paragraph (d)(1) of this section.

(i) A test run shall be conducted over the route segment at the speed the railroad will request FRA to approve for such service.

(ii) An additional test run shall be conducted at 10 km/h (6 mph) above this speed.

(3) When conducting stage-one and stage-two testing, if any of the monitored safety limits are exceeded on any segment of track, testing may continue provided that the track location(s) where any of the limits are exceeded be identified and test speeds be limited at the track location(s) until corrective action is taken. Corrective action may include making adjustments to the track, to the vehicle, or to both of these system components.

(4) Prior to the start of the qualification testing program, a qualifying Track Geometry Measurement System (TGMS) shall be operated over the intended route within 30 calendar days prior to the start of the qualification testing program to verify compliance with the track geometry limits specified in § 299.311.

(f) *Qualification testing results.* The railroad shall submit a report to FRA detailing all the results of the qualification program in accordance with § 299.613. The report shall be submitted at least 60 days prior to the intended operation of the equipment in revenue service over the route.

(g) *Cant deficiency.* Based on the test results and all other required submissions, FRA will approve a maximum trainset speed and value of cant deficiency for revenue service, normally within 45 days of receipt of all the required information. FRA may impose conditions necessary for safely operating at the maximum approved trainset speed and cant deficiency.

(h) *Vehicle/track interaction regulatory limits.* The following vehicle/track interaction regulatory limits shall not be exceeded during qualification testing in accordance with this section.

BILLING CODE 4910–06–P

Table 1 to paragraph (h)			
Vehicle/Track Interaction Safety Limits			
Wheel-Rail Forces[1]			
Parameter	Safety Limit	Filter / Window	Requirements
Single Wheel Vertical Load Ratio	≥ 0.15	1.5 m (5 ft)	No wheel of the vehicle shall be permitted to unload to less than 15 percent of the static vertical wheel load for 1.5 m (5 ft) or more continuous meters. The static vertical wheel load is defined as the load that the wheel would carry when stationary on level track.
Single Wheel L/V Ratio	$\leq \frac{\tan(\delta) - 0.5}{1 + 0.5\tan(\delta)}$	1.5 m (5 ft)	The ratio of the lateral force that any wheel exerts on an individual rail to the vertical force exerted by the same wheel on the rail shall not be greater than the safety limit calculated for the wheel's flange angle (δ) for 1.5 m (5 ft) or more continuous meters.
Net Axle Lateral L/V Ratio	$\leq 0.4 + \frac{22.24}{Va}$	1.5 m (5 ft)	The net axle lateral force, in kN, exerted by any axle on the track shall not exceed a total of 22.24 kN (5 kips) plus 40 percent of the static vertical

			load that the axle exerts on the track for 1.5 m (5 ft) or more continuous meters. *Va* = static vertical axle load (kN)
Bogie Side L/V Ratio	≤ 0.6	1.5 m (5 ft)	The ratio of the lateral forces that the wheels on one side of any bogie exert on an individual rail to the vertical forces exerted by the same wheels on that rail shall not be greater than 0.6 for 1.5 m (5 ft) or more continuous meters.

Carbody Accelerations[2]		
Parameter	All Vehicles	Requirements
Carbody Lateral (Transient)	≤ 0.35g peak-to-peak 1 sec window[3] excludes peaks < 50 msec	The peak-to-peak accelerations, measured as the algebraic difference between the two extreme values of measured acceleration in any 1-second time period, excluding any peak lasting less than 50 milliseconds, shall not exceed 0.35g for all vehicles.
Carbody Lateral (Sustained Oscillatory)	≤ 0.10g RMS_t[4] 4 sec window[3] 4 sec sustained	Sustained oscillatory lateral acceleration of the carbody shall not exceed the prescribed (root mean squared) safety limits of 0.10g for all vehicles. Root mean squared values shall be determined over a sliding 4- second window with linear trend removed and shall be sustained for more than 4 seconds.
Carbody Vertical (Transient)	≤ 0.45g peak-to-peak 1 sec window[3] excludes peaks < 50 msec	The peak-to-peak accelerations, measured as the algebraic difference between the two extreme values of measured acceleration in any one second time period, excluding any peak lasting less than 50 milliseconds, shall not exceed 0.45g for all vehicles.
Carbody Vertical (Sustained Oscillatory)	≤ 0.16g RMS_t[4] 4 sec window[3] 4 sec sustained	Sustained oscillatory vertical acceleration of the carbody shall not exceed the prescribed (root mean squared) safety limit of 0.16g for all vehicles. Root mean squared values shall be determined over a sliding 4-second window with linear trend removed and shall be sustained for more than 4 seconds.

Bogie Lateral Acceleration[5]			
Parameter	Safety Limit	Filter / Window	Requirements
Bogie Lateral Acceleration	≤ 0.30g RMS_t[4]	2 sec window [3] 2 sec sustained	Bogie hunting shall not develop below the maximum authorized speed. Bogie hunting is defined as a sustained cyclic oscillation of the bogie evidenced by lateral accelerations exceeding 0.30g root mean squared for more than 2 seconds. Root mean squared values shall be determined over a sliding 2-second window with linear trend removed.

[1] The lateral and vertical wheel forces shall be measured and processed through a low pass filter (LPF) with a minimum cut-off frequency of 25 Hz. The sample rate for wheel force data shall be at least 250 samples per second.
[2] Carbody accelerations in the vertical and lateral directions shall be measured by accelerometers oriented and located in accordance with § 299.331 (c)(3).
[3] Acceleration measurements shall be processed through an LPF with a minimum cut-off frequency of 10 Hz. The sample rate for acceleration data shall be at least 100 samples per second.
[4] RMS_t = RMS with linear trend removed.
[5] Bogie lateral acceleration shall be measured by accelerometers mounted on the bogie frame at a longitudinal location as close as practicable to an axle's centerline, or if approved by FRA, at an alternate location.

BILLING CODE 4910–06–C

§ 299.611 Simulated revenue operations.

(a) The railroad shall conduct simulated revenue operations for a minimum period of two weeks prior to revenue operations to verify overall system performance, and provide operating and maintenance experience.

(b) The railroad shall maintain a log of tests conducted during the simulated revenue operations period. This log of tests shall identify any problems encountered during testing, and actions necessary to correct defects in workmanship, materials, equipment, design, or operating parameters.

(c) The railroad shall implement all actions necessary to correct safety defects, as identified by the log prior to the initiation of revenue service.

§ 299.613 Verification of compliance.

(a) The railroad shall prepare a report detailing the results of pre-operational qualification, pre-revenue service testing, and vehicle/track system qualification tests required under §§ 299.605, 299.607, and 299.609 respectively. The report shall identify any problems encountered during testing, and alternative actions necessary to correct defects in workmanship, materials, equipment, design, or operating parameters.

(b) The railroad shall implement all actions necessary to correct defects, as identified by the report.

(c) The railroad shall submit the report(s) required by paragraph (a) of this section to FRA prior to commencing simulated revenue operations and at least 60 days prior to the intended start of full revenue service per § 299.609(f).

(d)(1) Prior to implementing a major upgrade to any safety-critical system component or sub-system, or prior to introducing any new safety-critical technology, the railroad shall submit for FRA approval the detailed test procedures and/or analysis in accordance with § 299.603(d).

(2) The railroad shall prepare a report detailing the results of pre-operational qualification, pre-revenue service testing, and vehicle/track system qualification tests required under §§ 299.605, 299.607, and 299.609 respectively pertaining to a major upgrade to any safety-critical system component or sub-system, or introduction of any new safety-critical technology. The report shall identify any problems encountered during testing, and alternative actions necessary to correct defects in workmanship, materials, equipment, design, or operating parameters.

Subpart G—Inspection, Testing, and Maintenance Program

§ 299.701 General requirements.

Under the procedures provided in § 299.713, the railroad shall obtain FRA approval of a written inspection, testing, and maintenance program. The program shall provide detailed information, consistent with the requirements set forth in §§ 299.337 through 299.349, and 299.447(a), on the inspection, testing, and maintenance procedures necessary for the railroad to safely operate its system. This information shall include a detailed description of—

(a) Safety inspection procedures, intervals, and criteria;

(b) Test procedures and intervals;

(c) Scheduled preventive maintenance intervals;

(d) Maintenance procedures; and

(e) Special testing equipment or measuring devices required to perform safety inspections and tests.

§ 299.703 Compliance.

After the railroad's inspection, testing, and maintenance program is approved

by FRA pursuant to the requirements and procedures set forth in § 299.713, the railroad shall adopt and comply with the program, and shall perform—

(a) All inspections and tests described in the program in accordance with the procedures and criteria that the railroad identified as safety-critical; and

(b) All maintenance tasks and procedures described in the program in accordance with the procedures and intervals that the railroad identified as safety-critical.

§ 299.705 Standard procedures for safely performing inspection, testing, and maintenance, or repairs.

(a) The railroad shall establish written standard procedures for performing all safety-critical or potentially hazardous inspection, testing, maintenance, and repair tasks. These standard procedures shall—

(1) Describe in detail each step required to safely perform the task;

(2) Describe the knowledge necessary to safely perform the task;

(3) Describe any precautions that shall be taken to safely perform the task;

(4) Describe the use of any safety equipment necessary to perform the task;

(5) Be approved by the railroad's official responsible for safety;

(6) Be enforced by the railroad's supervisors responsible for accomplishing the tasks; and

(7) Be reviewed annually by the railroad. The railroad shall provide written notice to FRA in accordance with § 299.9 at least one month prior to the annual review. If the Associate Administrator or their designee indicates a desire to be present, the railroad shall provide a scheduled date and location for the annual review. If the Associate Administrator requests the annual review be performed on another date but the railroad and the Associate Administrator are unable to agree on a date for rescheduling, the annual review may be performed as scheduled.

(b) The inspection, testing, and maintenance program required by this section is not intended to address and should not include procedures to address employee working conditions that arise in the course of conducting the inspections, tests, and maintenance set forth in the program. When reviewing the railroad's program, FRA does not intend to review or approve any portion of the program that relates to employee working conditions.

§ 299.707 Maintenance intervals.

(a) The initial scheduled maintenance intervals shall be based on those in effect on the Tokaido Shinkansen system as required under § 299.13(c)(1).

(b) The maintenance interval of safety-critical components shall be changed only when justified by accumulated, verifiable operating data, and approved by FRA under paragraph § 299.713.

§ 299.709 Quality control program.

The railroad shall establish an inspection, testing, and maintenance quality control program enforced by the railroad or its contractor(s) to reasonably ensure that inspections, testing, and maintenance are performed in accordance with inspection, testing, and maintenance program established under this subpart.

§ 299.711 Inspection, testing, and maintenance program format.

The submission to FRA for each identified subsystem shall consist of two parts—

(a) The complete inspection, testing, and maintenance program, in its entirety, including all required information prescribed in § 299.701, and all information and procedures required for the railroad and its personnel to implement the program.

(b) A condensed version of the program that contains only those items identified as safety-critical, per § 299.703 submitted for approval by FRA under § 299.713.

§ 299.713 Program approval procedure.

(a) *Submission.* Except as provided in § 299.445(a)(2), the railroad shall submit for approval an inspection, testing, and maintenance program as described in § 299.711(b) not less than 180 days prior to pre-revenue service testing. The program shall be submitted to FRA in accordance with § 299.9. If the railroad seeks to amend an approved program as described in § 299.711(b), the railroad shall file with FRA in accordance with § 299.9 for approval of such amendment not less than 60 days prior to the proposed effective date of the amendment. A program responsive to the requirements of this subpart or any amendment to the program shall not be implemented prior to FRA approval.

(b) *Contents.* Each program or amendment shall contain:

(1) The information prescribed in § 299.701 for such program or amendment;

(2) The name, title, address, and telephone number of the primary person to be contacted with regard to review of the program, its content, or amendments.

(c) *Approval.* (1) Within 90 days of receipt of the initial inspection, testing, and maintenance program, FRA will review the program. The Associate Administrator will notify the primary railroad contact person in writing whether the inspection, testing, and maintenance program is approved and, if not approved, the specific points in which the program is deficient. Deficiencies identified shall be addressed as directed by FRA prior to implementing the program.

(2) FRA will review each proposed amendment to the program that relaxes an FRA-approved requirement within 45 days of receipt. The Associate Administrator will then notify the primary railroad contact person in writing whether the proposed amendment has been approved by FRA and, if not approved, the specific points in which the proposed amendment is deficient. The railroad shall correct any deficiencies as directed by FRA prior to implementing the amendment. For amendments proposing to make an FRA-approved program requirement more stringent, the railroad is permitted to implement the amendment prior to obtaining FRA approval.

(3) Following initial approval of a program or amendment, FRA may reopen consideration of the program or amendment for cause stated.

(4) The railroad may, subject to FRA review and approval under § 299.15, implement inspection, testing, maintenance procedures and criteria, incorporating new or emerging technology.

Appendix A to Part 299—Criteria for Certification of Crashworthy Event Recorder Memory Module

Section 299.439(c) requires that trainsets be equipped with an event recorder that includes a certified crashworthy event recorder memory module. This appendix prescribes the requirements for certifying an event recorder memory module (ERMM) as crashworthy, including the performance criteria and test sequence for establishing the crashworthiness of the ERMM as well as the marking of the event recorder containing the crashworthy ERMM.

A. General Requirements

(a) Each manufacturer that represents its ERMM as crashworthy shall, by marking it as specified in section B of this appendix, certify that the ERMM meets the performance criteria contained in this appendix and that test verification data are available to the railroad or to FRA upon request.

(b) The test verification data shall contain, at a minimum, all pertinent original data logs and documentation that the test sample preparation, test set up, test measuring devices and test procedures were performed by designated, qualified individuals using recognized and acceptable practices. Test verification data shall be retained by the manufacturer or its successor as long as the specific model of ERMM remains in service on any trainset.

(c) A crashworthy ERMM shall be marked by its manufacturer as specified in section B of this appendix.

B. Marking Requirements

(a) The outer surface of the event recorder containing a certified crashworthy ERMM shall be colored international orange. In addition, the outer surface shall be inscribed, on the surface allowing the most visible area, in black letters on an international orange background, using the largest type size that can be accommodated, with the words ''CERTIFIED DOT CRASHWORTHY'', followed by the ERMM model number (or other such designation), and the name of the manufacturer of the event recorder. This information may be displayed as follows:

CERTIFIED DOT CRASHWORTHY
Event Recorder Memory Module Model Number
Manufacturer's Name

Marking ''CERTIFIED DOT CRASHWORTHY'' on an event recorder designed for installation in the railroad's trainsets is the certification that all performance criteria contained in this appendix have been met and all functions performed by, or on behalf of, the manufacturer whose name appears as part of the marking, conform to the requirements specified in this appendix.

(b) Retro-reflective material shall be applied to the edges of each visible external surface of an event recorder containing a certified crashworthy ERMM.

C. Performance Criteria for the ERMM

An ERMM is crashworthy if it has been successfully tested for survival under conditions of fire, impact shock, static crush, fluid immersion, and hydro-static pressure contained in one of the two tables shown in this section of appendix B. (See Tables 1 and 2.) Each ERMM must meet the individual performance criteria in the sequence established in section D of this appendix. A performance criterion is deemed to be met if, after undergoing a test established in this appendix B for that criterion, the ERMM has preserved all of the data stored in it. The data set stored in the ERMM to be tested shall include all the recording elements required by § 299.439(c). The following tables describe alternative performance criteria that may be used when testing an ERMM's crashworthiness. A manufacturer may utilize either table during its testing but may not combine the criteria contained in the two tables.

TABLE 1 TO APPENDIX A OF PART 299—ACCEPTABLE PERFORMANCE CRITERIA—OPTION A

Parameter	Value	Duration	Remarks
Fire, High Temperature	750 °C (1400 °F)	60 minutes	Heat source: Oven.
Fire, Low Temperature	260 °C (500 °F)	10 hours	
Impact Shock	55g	100 ms	½ sine crash pulse.
Static Crush	110kN (25,000 lbf)	5 minutes	
Fluid Immersion	#1 Diesel, #2 Diesel, Water, Salt Water, Lube Oil.	Any *single* fluid, 48 hours	
	Fire Fighting Fluid	10 minutes, following immersion above.	Immersion followed by 48 hours in a dry location without further disturbance.
Hydrostatic Pressure	Depth equivalent = 15 m. (50 ft.)	48 hours at nominal temperature of 25 °C (77 °F).	

TABLE 2 TO APPENDIX A TO PART 299—ACCEPTABLE PERFORMANCE CRITERIA—OPTION B

Parameter	Value	Duration	Remarks
Fire, High Temperature	1000 °C (1832 °F)	60 minutes	Heat source: Open flame.
Fire, Low Temperature	260 °C (500 °F)	10 hours	Heat source: Oven.
Impact Shock—Option 1	23gs	250 ms	
Impact Shock—Option 2	55gs	100 ms	½ sine crash pulse.
Static Crush	111.2kN (25,000 lbf)	5 minutes.	Applied to 25% of surface of largest face.
	44.5kN (10,000 lbf)	(single "squeeze")	
Fluid Immersion	#1 Diesel, #2 Diesel, Water, Salt Water, Lube Oil, Fire Fighting Fluid.	48 hours *each*	
Hydrostatic Pressure	46.62 psig (= 30.5 m. or 100 ft.)	48 hours at nominal temperature of 25 °C (77 °F).	

D. Testing Sequence

In order to reasonably duplicate the conditions an event recorder may encounter, the ERMM shall meet the various performance criteria, described in section C of this appendix, in a set sequence. (See Figure 1). If all tests are done in the set sequence (single branch testing), the same ERMM must be utilized throughout. If a manufacturer opts for split branch testing, each branch of the test must be conducted using an ERMM of the same design type as used for the other branch. Both alternatives are deemed equivalent, and the choice of single branch testing or split branch testing may be determined by the party representing that the ERMM meets the standard.

Figure 1 to Appendix A to Part 238 – Event Recorder Memory Module Sequential Testing

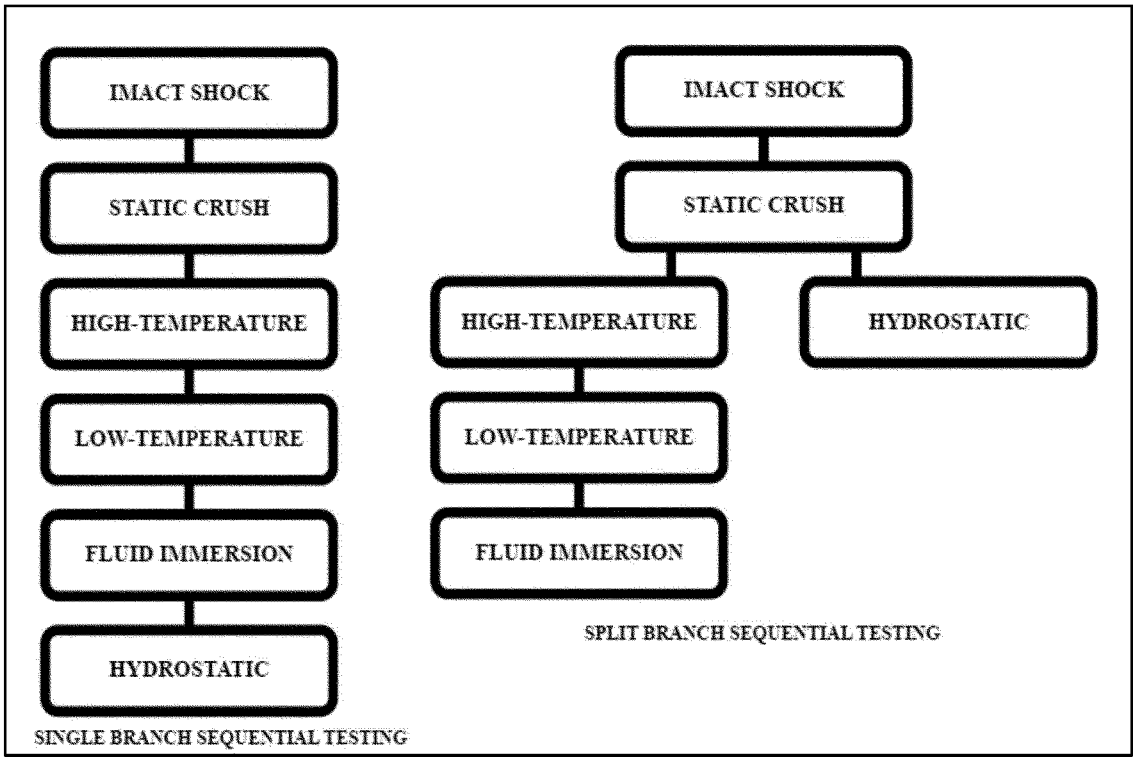

E. Testing Exception

If a new model ERMM represents an evolution or upgrade from an older model ERMM that was previously tested and certified as meeting the performance criteria contained in section C of this appendix, the new model ERMM need only be tested for compliance with those performance criteria contained in section C of this appendix that are potentially affected by the upgrade or modification. FRA will consider a performance criterion not to be potentially affected if a preliminary engineering analysis or other pertinent data establishes that the modification or upgrade will not change the performance of the older model ERMM against the performance criterion in question. The manufacturer shall retain and make available to FRA upon request any analysis or data relied upon to satisfy the requirements of this paragraph to sustain an exception from testing.

Appendix B to Part 299—Cab Noise Test Protocol

This appendix prescribes the procedures for the in-cab noise measurements for high-speed trainsets at speed. The purpose of the cab noise testing is to ensure that the noise levels within the cab of the trainset meet the minimum requirements defined within § 299.437(l).

I. Measurement Instrumentation

The instrumentation used shall conform to the requirements prescribed in appendix H to part 229 of this chapter.

II. Test Site Requirements

The test shall meet the following requirements:

(a) The passenger trainset shall be tested over a representative segment of the railroad and shall not be tested in any site specifically designed to artificially lower in-cab noise levels.

(b) All windows, doors, cabinets, seals, etc., must be installed in the trainset cab and be closed.

(c) The heating, ventilation and air conditioning (HVAC) system or a dedicated heating or air conditioner system must be operating on high, and the vents must be open and unobstructed.

III. Procedures for Measurement

(a) $L_{Aeq,T}$ is defined as the A-weighted, equivalent sound level for a duration of T seconds, and the sound level meter shall be set for A-weighting with slow response.

(b) The sound level meter shall be calibrated with the acoustic calibrator immediately before and after the in-cab tests. The calibration levels shall be recorded.

(c) Any change in the before and after calibration level(s) shall be less than 0.5 dB.

(d) The sound level meter shall be located:

(1) Laterally as close as practicable to the longitudinal centerline of the cab, adjacent to the driver's seat,

(2) Longitudinally at the center of the driver's nominal seating position, and

(3) At a height 1219 mm (48 inches) above the floor.

(e) The sound measurements shall be taken autonomously within the cab.

(f) The sound level shall be recorded at the maximum approved trainset speed (0/-3 km/h).

(g) After the passenger trainset speed has become constant at the maximum test speed and the in-cab noise is continuous, $L_{Aeq,T}$ shall be measured, either directly or using a 1 second sampling interval, for a minimum duration of 30 seconds at the measurement position ($L_{Aeq,\ 30s}$).

IV. Reporting

To demonstrate compliance, the railroad shall prepare and submit a test report in accordance with § 299.613. As a minimum that report shall contain—

(a) Name(s) of person(s) conducting the test, and the date of the test.

(b) Description of the passenger trainset cab being tested, including: car number and date of manufacture.

(c) Description of sound level meter and calibrator, including: make, model, type, serial number, and manufacturer's calibration date.

(d) The recorded measurement during calibration and for the microphone location during operating conditions.

(e) The recorded measurements taken during the conduct of the test.

(f) Other information as appropriate to describe the testing conditions and procedure.

Issued in Washington, DC.

Ronald L. Batory,

Administrator.

[FR Doc. 2020–03521 Filed 3–9–20; 8:45 am]

BILLING CODE 4910–06–P

FEDERAL REGISTER

Vol. 85 Tuesday,

No. 47 March 10, 2020

Part IV

Environmental Protection Agency

40 CFR Part 141

Announcement of Preliminary Regulatory Determinations for Contaminants on the Fourth Drinking Water Contaminant Candidate List; Proposed Rule

ENVIRONMENTAL PROTECTION AGENCY

40 CFR Part 141

[EPA–HQ–OW–2019–0583; FRL–10005–88–OW]

Announcement of Preliminary Regulatory Determinations for Contaminants on the Fourth Drinking Water Contaminant Candidate List

AGENCY: Environmental Protection Agency (EPA).

ACTION: Request for public comment.

SUMMARY: The Safe Drinking Water Act (SDWA), as amended in 1996, requires the Environmental Protection Agency (EPA) to make regulatory determinations every five years on at least five unregulated contaminants. A regulatory determination is a decision about whether or not to begin the process to propose and promulgate a national primary drinking water regulation (NPDWR) for an unregulated contaminant. A preliminary regulatory determination lays out and takes comment on EPA's view about whether certain unregulated contaminants meet three statutory criteria. After EPA considers public comment, EPA makes a final determination. The unregulated contaminants included in a regulatory determination are chosen from the Contaminant Candidate List (CCL), which the SDWA requires the EPA to publish every five years. The EPA published the fourth CCL (CCL 4) in the **Federal Register** on November 17, 2016. This document presents the preliminary regulatory determinations and supporting rationale for the following eight of the 109 contaminants listed on CCL 4: Perfluorooctanesulfonic acid (PFOS), perfluorooctanoic acid (PFOA), 1,1-dichloroethane, acetochlor, methyl bromide (bromomethane), metolachlor, nitrobenzene, and Royal Demolition eXplosive (RDX). The Agency is making preliminary determinations to regulate two contaminants (*i.e.,* PFOS and PFOA) and to not regulate six contaminants (*i.e.,* 1,1-dichloroethane, acetochlor, methyl bromide, metolachlor, nitrobenzene, and RDX). The EPA seeks comment on these preliminary determinations. The EPA is also presenting an update on three other CCL 4 contaminants (strontium, 1,4-dioxane, and 1,2,3-trichloropropane).

DATES: Comments must be received on or before May 11, 2020.

ADDRESSES: You may send comments, identified by Docket ID No. EPA–HQ–OW–2019–0583, by any of the following methods:

- *Federal eRulemaking Portal: https://www.regulations.gov/* (our preferred method). Follow the online instructions for submitting comments.
- *Mail:* Water Docket, Environmental Protection Agency, Mail Code: [28221T], 1200 Pennsylvania Ave. NW, Washington, DC 20460.
- *Hand Delivery:* EPA Docket Center, [EPA/DC] EPA West, Room 3334, 1301 Constitution Ave. NW, Washington, DC. Such deliveries are only accepted during the Docket's normal hours of operation, and special arrangements should be made for deliveries of boxed information.

Instructions: All submissions received must include the Docket ID No. for this rulemaking. Comments received may be posted without change to *https://www.regulations.gov/,* including any personal information provided. For detailed instructions on sending comments and additional information on the rulemaking process, see the ''Written Comments'' heading of the **SUPPLEMENTARY INFORMATION** section of this document.

FOR FURTHER INFORMATION CONTACT: Richard Weisman, Standards and Risk Management Division, Office of Ground Water and Drinking Water, MC: 4607M, Environmental Protection Agency, 1200 Pennsylvania Ave. NW; telephone number: (202) 564–2822; email address: *weisman.richard@epa.gov.*

SUPPLEMENTARY INFORMATION:

I. General Information

A. Written Comments

Submit your comments, identified by Docket ID No. EPA–HQ–OW–2019–0583, at *https://www.regulations.gov* (our preferred method), or the other methods identified in the **ADDRESSES** section. Once submitted, comments cannot be edited or removed from the docket. The EPA may publish any comment received to its public docket. Do not submit electronically any information you consider to be Confidential Business Information (CBI) or other information whose disclosure is restricted by statute. Multimedia submissions (audio, video, etc.) must be accompanied by a written comment. The written comment is considered the official comment and should include discussion of all points you wish to make. The EPA will generally not consider comments or comment contents located outside of the primary submission (*i.e.,* on the web, cloud, or other file sharing system). For additional submission methods, the full EPA public comment policy, information about CBI or multimedia submissions, and general guidance on making effective comments, please visit *https://www.epa.gov/dockets/commenting-epa-dockets.*

When submitting comments, remember to:

- Identify the rulemaking by docket number and other identifying information (subject heading, **Federal Register** date, and page number).
- Explain why you agree or disagree and suggest alternatives.
- Describe any assumptions and provide any technical information and/or data that you used.
- Provide specific examples to illustrate your concerns and suggest alternatives.
- Explain your views as clearly as possible.
- Make sure to submit your comments by the comment period deadline identified.

B. Does this action apply to me?

Neither these preliminary regulatory determinations nor the final regulatory determinations, when published, impose any requirements on anyone. Instead, this action notifies interested parties of the EPA's preliminary regulatory determinations for eight unregulated contaminants for comment.

Abbreviations Used in This Document

Abbreviation	Meaning
ADAF	Age Dependent Adjustment Factor
ADONA	4,8-dioxa-3H-perfluorononanoic acid
ALT	Alanine Aminotransferase
AM	Assessment Monitoring
AOP	Advanced Oxidative Process
ASDWA	Association of State Drinking Water Administrators
ATSDR	Agency for Toxic Substances and Disease Registry
AWIA	America's Water Infrastructure Act
BAT	Best Available Technology
BMD	Benchmark Dose
BMDL	Benchmark Dose Level
BMDS	Benchmark Dose Software
BMR	Benchmark Response
BW	Body Weight
CAR	Constitutive Androstane Receptor
CBI	Confidential Business Information
CCL	Contaminant Candidate List
CCL 1	First Contaminant Candidate List
CCL 2	Second Contaminant Candidate List
CCL 3	Third Contaminant Candidate List
CCL 4	Fourth Contaminant Candidate List
CDPHE	Colorado Department of Public Health and Environment
CDR	Chemical Data Reporting
CIIT	Chemical Industry Institute of Toxicology
CNS	Central Nervous System
cPAD	Chronic Population Adjusted Dose
CRL	Cancer Risk Level
CSF	Cancer Slope Factor

Abbreviation	Meaning
CWS	Community Water System
CWSS	Community Water System Survey
D/DBP	Disinfectants/Disinfection By-products
DBP	Disinfection Byproduct
DDE	1,1-Dichloro-2,2-bis(p-chlorophenyl)ethylene
DWI	Drinking Water Intake
EPA	Environmental Protection Agency
EPCRA	Emergency Planning and Community Right-To-Know Act
EPTC	S-Ethyl dipropylthiocarbamate
ESA	Ethanesulfonic Acid
FtOH 6:2	6:2 Fluorotelomer Alcohol
FtOH 8:2	8:2 Fluorotelomer Alcohol
FtS 6:2	6:2 Fluorotelomer Sulfonic Acid
FtS 8:2	8:2 Fluorotelomer Sulfonic Acid
FQPA	Food Quality Protection Act
FR	Federal Register
HA	Health Advisory
HDL	High-Density Lipoprotein
HED	Human Equivalent Dose
HERO	Health and Environmental Research Online
HESD	Health Effects Support Document
HFPO	Hexafluoropropylene Oxide
HHRA	Human Health Risk Assessment
HRL	Health Reference Level
IARC	International Agency for Research on Cancer
ICR	Information Collection Rule
IOC	Inorganic Compound
IRED	Interim Reregistration Eligibility Decision
IRIS	Integrated Risk Information System
IUR	Inventory Update Reporting
K_H	Henry's Law Constant
K_{oc}	Organic Carbon Partitioning Coefficients
LOAEL	Lowest Observed Adverse Effect Level
log K_{ow}	Octanol-Water Partitioning Coefficient
MCL	Maximum Contaminant Level
MCLG	Maximum Contaminant Level Goal
metHB	Methemoglobin
MOA	Mode of Action
MRL	Minimum Reporting Level
NAM	New Approach Method
NAS	National Academy of Sciences
NAWQA	National Water Quality Assessment
NCDEQ	North Carolina Department of Environmental Quality
NCFAP	National Center for Food and Agricultural Policy
NCI	National Cancer Institute
NDEA	N-Nitrosodiethylamine
NDMA	N-Nitrosodimethylamine
NDPA	N-Nitroso-di-n-propylamine
NDPhA	N-Nitrosodiphenylamine
NDWAC	National Drinking Water Advisory Council
NEtFOSAA	2-(N-Ethylperfluorooctanesulfonamido) acetic acid
NHDES	New Hampshire Department of Environmental Services
NIEHS	National Institute of Environmental Health Sciences
NIRS	National Inorganics and Radionuclides Survey
NMeFOSAA	2-(N-Methylperfluorooctanesulfonamido) Acetic Acid
NOAEL	No Observed Adverse Effect Level
NPDWR	National Primary Drinking Water Regulation
NPYR	N-Nitrosopyrrolidine
NRC	National Research Council
NTP	National Toxicology Program
NWIS	National Water Information System
OA	Oxanilic Acid
OPP	Office of Pesticides Program
ORD	Office of Research and Development
OTC	Ornithine Carbamoyl Transferase
OW	Office of Water
PCCL	Preliminary Contaminant Candidate List
PDP	Pesticide Data Program
PFAA	Perfluorinated Alkyl Acids
PFAS	Per- and Polyfluoroalkyl Substances
PFBA	Perfluorobutanoic Acid
PFBS	Perfluorobutanesulfonic Acid
PFDA	Perfluorodecanoic Acid
PFDS	Perfluorodecanesulfonic Acid
PFHpA	Perfluoroheptanoic Acid
PFHpS	Perfluoroheptanesulfonic Acid
PFHxA	Perfluorohexanoic Acid
PFHxS	Perfluorohexanesulfonic Acid
PFNA	Perfluorononanoic Acid
PFNS	Perfluorononanesulfonic Acid
PFOA	Perfluorooctanoic Acid
PFOS	Perfluorooctanesulfonic Acid
PFOSA	Perfluorooctanesulfonamide
PFPeA	Perfluoropentanoic Acid
PFPeS	Perfluoropentanesulfonic Acid
PFTeDA	Perfluorotetradecanoic Acid
PFUnA	Perfluoroundecanoic Acid
PMP	Pesticide Monitoring Program
POD	Point of Departure
PPRTV	Provisional Peer-Reviewed Toxicity Value
PST	Pre-Screen Testing
PWS	Public Water System
QA	Quality Assurance
RD 1	Regulatory Determination 1
RD 2	Regulatory Determination 2
RD 3	Regulatory Determination 3
RD 4	Regulatory Determination 4
RDX	Royal Demolition eXplosive
RED	Reregistration Eligibility Decision
RfD	Reference Dose
RSC	Relative Source Contribution
SD	Standard Deviation
SDWA	Safe Drinking Water Act
SS	Screening Survey
SSCT	Small System Compliance Technology
STORET	Storage and Retrieval Data System
TOF	Total Organic Fluorine
TOP	Total Organic Precursor
TPTH	Triphenyltin Hydroxide
TRED	Tolerance Reassessment Progress and Risk Management Decision
TRI	Toxic Release Inventory
TSCA	Toxic Substances Control Act
TT	Treatment Technique
UCM	Unregulated Contaminant Monitoring
UCMR	Unregulated Contaminant Monitoring Rule
UCMR 1	First Unregulated Contaminant Monitoring Rule
UCMR 2	Second Unregulated Contaminant Monitoring Rule
UCMR 3	Third Unregulated Contaminant Monitoring Rule
UF	Uncertainty Factor
UNEP	United Nations Environmental Programme
USDA	United States Department of Agriculture
USGS	United States Geological Survey
VOC	Volatile Organic Compound
WHO	World Health Organization
WQP	Water Quality Portal
WQX	Water Quality Exchange
5:3 acid	2H,2H,3H,3H-Perfluorooctanoic acid
6:2 diPAP	Bis[2-(perfluorohexyl)ethyl] phosphate
6:2 monoPAP	Mono[2-(perfluorohexyl)ethyl] phosphate
6:2/8:2 diPAP	6:2/8:2 Fluorotelomer phosphate diester
8:2 diPAP	Bis[2-(perfluorooctyl)ethyl] phosphate
8:2 monoPAP	Mono[2-(perfluorooctyl)ethyl] phosphate

Table of Contents

I. General Information
A. Written Comments
B. Does this action apply to me?
II. Purpose and Background
A. What is the purpose of this action?
B. Background on the CCL and Regulatory Determinations
1. Statutory Requirements for CCL and Regulatory Determinations
2. The First Contaminant Candidate List (CCL 1) and Regulatory Determination (RD 1)
3. The Second Contaminant Candidate List (CCL 2) and Regulatory Determination (RD 2)
4. The Third Contaminant Candidate List (CCL 3) and Regulatory Determination (RD 3)
5. The Fourth Contaminant Candidate List (CCL 4) and Regulatory Determination (RD 4)
III. Approach and Overall Outcomes for RD 4
A. Summary of the Approach and Overall Outcomes for RD 4
1. Phase 1 (Data Availability Phase)
2. Phase 2 (Data Evaluation Phase)
3. Phase 3 (Regulatory Determination Assessment Phase)
B. Supporting Documentation for EPA's Preliminary Determination
C. Analyses Used To Support the Preliminary Regulatory Determinations
1. Evaluation of Adverse Health Effects
2. Evaluation of Contaminant Occurrence and Exposure
IV. Contaminant-Specific Discussions for the RD 4 Preliminary Determination
A. Summary of the Preliminary Regulatory Determination
B. Contaminant Profiles
1. PFOA and PFOS
2. 1,1-Dichloroethane
3. Acetochlor
4. Methyl Bromide (Bromomethane)
5. Metolachlor
6. Nitrobenzene
7. RDX
V. Status of the Agency's Evaluation of Strontium, 1,4-Dioxane, and 1,2,3-Trichloropropane
A. Strontium
B. 1,4-Dioxane
C. 1,2,3-Trichloropropane
VI. EPA's Request for Comments and Next Steps
VII. References

II. Purpose and Background

This section briefly summarizes the purpose of this action, the statutory requirements, and previous activities related to the CCL and regulatory determinations.

A. What is the purpose of this action?

The purpose of this action is to request comment on the Environmental Protection Agency's (EPA's) preliminary regulatory determinations for the following eight unregulated contaminants: Perfluorooctanesulfonic acid (PFOS), perfluorooctanoic acid (PFOA), 1,1-dichloroethane, acetochlor, methyl bromide (bromomethane), metolachlor, nitrobenzene, and RDX. The Agency is making preliminary determinations to regulate two contaminants (PFOS and PFOA) and to not regulate the remaining six contaminants (1,1-dichloroethane, acetochlor, methyl bromide, metolachlor, nitrobenzene, and RDX). As described in Section III.A.3, if the EPA finalizes these preliminary regulatory determinations, it would represent the beginning of the Agency's regulatory development process, not the end. As required by SDWA, the EPA seeks comment on these preliminary determinations and is asking for information and comment on other per- and polyfluoroalkyl substances (PFAS) and potential regulatory approaches. The Agency is also requesting comment on the process and analyses used for this round of regulatory determinations (*i.e.,* RD 4), the supporting information, additional studies or sources of information the Agency should consider, and the rationale used to make these preliminary decisions. The EPA is also presenting an update on strontium (from the third regulatory determination) and two other CCL 4 contaminants for which the Agency is not making preliminary determinations today (1,4-dioxane and 1,2,3-trichloropropane).

It should be noted that the analyses associated with a regulatory determination process are distinct from the analyses needed to develop a National Primary Drinking Water Regulation (NPDWR). Thus, a decision to regulate is the beginning of the Agency's regulatory development process, not the end. For example, the EPA may find at a later point in the regulatory development process, and based on additional or new information, that a contaminant does not meet the three statutory criteria for finalizing a NPDWR.

B. Background on the CCL and Regulatory Determinations

1. Statutory Requirements for CCL and Regulatory Determinations

Section 1412(b)(1)(B)(i) of the SDWA requires the EPA to publish the CCL every five years after public notice and an opportunity to comment. The CCL is a list of contaminants which are not subject to any proposed or promulgated NPDWRs but are known or anticipated to occur in public water systems (PWSs) and may require regulation under the SDWA. SDWA section 1412(b)(1)(B)(ii) directs the EPA to determine, after public notice and an opportunity to comment, whether to regulate at least five contaminants from the CCL every five years. Under Section 1412(b)(1)(A) of SDWA, the EPA makes a determination to regulate a contaminant in drinking water if the Administrator determines that:

(a) The contaminant may have an adverse effect on the health of persons;

(b) the contaminant is known to occur or there is substantial likelihood that the contaminant will occur in public water systems with a frequency and at levels of public health concern; and

(c) in the sole judgment of the Administrator, regulation of such contaminant presents a meaningful opportunity for health risk reduction for persons served by public water systems.

If the EPA determines that these three statutory criteria are met and makes a final determination to regulate a contaminant (*i.e.,* a positive determination), the Agency must publish a proposed Maximum Contaminant Level Goal (MCLG) [1] and NPDWR [2] within 24 months. After the proposal, the Agency must publish a final MCLG and promulgate a final NPDWR (SDWA section 1412(b)(1)(E)) within 18 months.[3]

The development of the CCL, regulatory determinations, and any subsequent rulemaking should be viewed as a progression where each process builds upon the previous process, including the collection of data and analyses conducted. The Agency's improvements in developing CCLs 3 and 4 provided a foundation for RD 4 by enhancing the EPA's ability to identify contaminants of concern for drinking water. Sections III and IV in this document provide more detailed information about the approach and outcomes for RD 4 and the contaminant-specific regulatory determinations.

2. The First Contaminant Candidate List (CCL 1) and Regulatory Determination (RD 1)

The EPA published the final CCL 1, which contained 60 chemical and microbiological contaminants, in the **Federal Register** (FR) on March 2, 1998 (63 FR 10273; USEPA, 1998). The Agency published the final regulatory determinations for nine of the 60 CCL 1 contaminants in the FR on July 18, 2003. The Agency determined that NPDWRs were not necessary for nine contaminants: *Acanthamoeba,* aldrin, dieldrin, hexachlorobutadiene, manganese, metribuzin, naphthalene, sodium, and sulfate (68 FR 42898; USEPA, 2003a). The Agency posted information about *Acanthamoeba* [4] on the EPA's website and issued health advisories [5] (HAs) for manganese, sodium, and sulfate.

3. The Second Contaminant Candidate List (CCL 2) and Regulatory Determination (RD 2)

The Agency published the final CCL 2 in the FR on February 24, 2005 (70 FR 9071; USEPA, 2005a) and carried forward the 51 remaining chemical and microbial contaminants listed on CCL 1. The Agency published the final regulatory determinations for 11 of the 51 CCL 2 contaminants in the FR on July 30, 2008. The Agency determined that NPDWRs were not necessary for 11 contaminants: Boron, the dacthal mono- and di-acid degradates, 1,1-dichloro-2,2-bis(p-chlorophenyl)ethylene (DDE), 1,3-dichloropropene (Telone), 2,4-dinitrotoluene, 2,6-dinitrotoluene, s-ethyl dipropylthiocarbamate (EPTC), fonofos, terbacil, and 1,1,2,2-

[1] An MCLG is the maximum level of a contaminant in drinking water at which no known or anticipated adverse effect on the health of persons would occur, and which allows an adequate margin of safety. MCLGs are non-enforceable health goals. (40 CFR 141.2; 42 U.S.C. 300g–1)

[2] An NPDWR is a legally enforceable standard that applies to public water systems. An NPDWR sets a legal limit (called a maximum contaminant level or MCL) or specifies a certain treatment technique (TT) for public water systems for a specific contaminant or group of contaminants. The MCL is the highest level of a contaminant that is allowed in drinking water and is set as close to the MCLG as feasible using the best available treatment technology and taking cost into consideration.

[3] The statute authorizes a nine-month extension of this promulgation date.

[4] Consumer information about *Acanthamoeba* for people who wear contact lenses can be found at *http://water.epa.gov/action/advisories/acanthamoeba/index.cfm.*

[5] Health advisories provide information on contaminants that can cause human health effects and are known or anticipated to occur in drinking water. The EPA's health advisories are non-enforceable and provide technical guidance to states agencies and other public health officials on health effects, analytical methodologies, and treatment technologies associated with drinking water contamination. Health advisories can be found at *http://water.epa.gov/drink/standards/hascience.cfm.*

tetrachloroethane (73 FR 44251; USEPA, 2008a). The Agency issued new or updated health advisories for boron, dacthal degradates, 2,4-dinitrotoluene, 2,6-dinitrotoluene, and 1,1,2,2-tetrachloroethane.

4. The Third Contaminant Candidate List (CCL 3) and Regulatory Determination (RD 3)

The Agency published the final CCL 3, which listed 116 contaminants, in the FR on October 8, 2009 (74 FR 51850; USEPA, 2009a). In developing CCL 3, the EPA improved and built upon the process that was used for CCL 1 and CCL 2. The CCL 3 process was based on substantial expert input and recommendations from the National Academy of Science's (NAS) National Research Council (NRC) and the National Drinking Water Advisory Council (NDWAC) as well as input from the public. Based on these consultations and input, the EPA developed a multi-step process to select candidates for the final CCL 3, which included the following key steps:

(a) Identification of a broad universe of ~7,500 potential drinking water contaminants (the CCL 3 Universe);

(b) screening the CCL 3 Universe to a preliminary CCL (PCCL) of ~600 contaminants based on the potential to occur in PWSs and the potential for public health concern; and

(c) evaluation of the PCCL contaminants based on a more detailed review of the occurrence and health effects data to identify a list of 116 CCL 3 contaminants.

The Agency published its preliminary regulatory determinations for contaminants listed on the CCL 3 in the FR on October 20, 2014 (79 FR 62715; USEPA, 2014a). In that document, the EPA made preliminary determinations for 5 of the 116 contaminants listed on the CCL 3 including a preliminary positive determination for strontium and preliminary negative determinations for dimethoate, 1,3-dinitrobenzene, terbufos, and terbufos sulfone. On January 4, 2016 (81 FR 13; USEPA, 2016a), the EPA finalized the negative determinations for dimethoate, 1,3-dinitrobenzene, terbufos, and terbufos sulfone. The EPA announced a delay in issuing a final regulatory determination on strontium in order to consider additional data. Additional discussion on strontium is provided in Section V of this document.

The EPA also published an off-cycle final determination to regulate one CCL 3 contaminant, perchlorate, on February 11, 2011 (76 FR 7762; USEPA, 2011a) during the RD 3 cycle (bringing the total number of final determinations to five). Additional information about the perchlorate determination can be found in that document.

5. The Fourth Contaminant Candidate List (CCL 4) and Regulatory Determination (RD 4)

The final CCL 4 was published on November 17, 2016 (81 FR 81099; USEPA, 2016b) and is the latest CCL published by EPA. The final CCL 4 consists of 97 chemicals or chemical groups and 12 microbiological contaminants. Most CCL 4 contaminants were carried over from CCL 3 (which, as described above, was developed according to a rigorous process with input from multiple stakeholders over the course of multiple years). The EPA added two contaminants (manganese and nonylphenol) to the CCL 4 list based on nominations. The EPA removed from the list those CCL 3 contaminants that had been subject to recent preliminary and/or final regulatory determinations (perchlorate, dimethoate, 1,3-dinitrobenzene, terbufos, terbufos sulfone, and strontium) and three pesticides with cancelled registrations (disulfoton, fenamiphos, and molinate).

III. Approach and Overall Outcomes for RD 4

This section describes (a) the approach the EPA used to identify and evaluate contaminants for the Agency's fourth round of Regulatory Determination (RD 4) along with the overall outcome of applying this approach, (b) the supporting RD 4 documentation, and (c) the technical analyses and sources of health and occurrence information.

A. Summary of the Approach and Overall Outcomes for RD 4

The approach taken under RD 4 is similar to that used in previous rounds of Regulatory Determination and formalized in a written Protocol under Regulatory Determination 3. The Regulatory Determination 4 Protocol, found in Appendix E of the Regulatory Determination 4 Support Document (USEPA, 2019a), like the Regulatory Determination 3 protocol, specifies a three-phase process. The three phases are: (1) The Data Availability Phase, (2) the Data Evaluation Phase, and (3) the Regulatory Determination Assessment Phase. Figure 1 provides an overview of the process the EPA uses to identify which CCL 4 contaminants are candidates for regulatory determinations and the SDWA statutory criteria considered in making the regulatory determinations. For more detailed information on the three phases of the RD 4 process please refer to the Regulatory Determination 4 Protocol (Appendix E to USEPA, 2019a).

SDWA 1412 (b)(1)(C) requires that the Administrator prioritize selection of contaminants that present the greatest public health concern. The Administrator, in making such selections, shall take into consideration, among other factors of public health concern, the effect of such contaminants upon subgroups that comprise a meaningful portion of the general population (such as infants, children, pregnant women, the elderly, individuals with a history of serious illness, or other subpopulations) that are identifiable as being at greater risk of adverse health effects due to exposure to contaminants in drinking water than the general population. Because the RD 4 process includes consideration of human health effects, the Agency's Policy on Evaluating Health Risks to Children (USEPA, 1995a) to consistently and comprehensively address children's unique vulnerabilities, recently reaffirmed by Administrator Wheeler (USEPA, 2018a), applies to this action. We have explicitly considered children's health in the RD 4 process by reviewing all the available children's exposure and health effects information.

Figure 1: The Three Primary Phases of the RD 4 Process

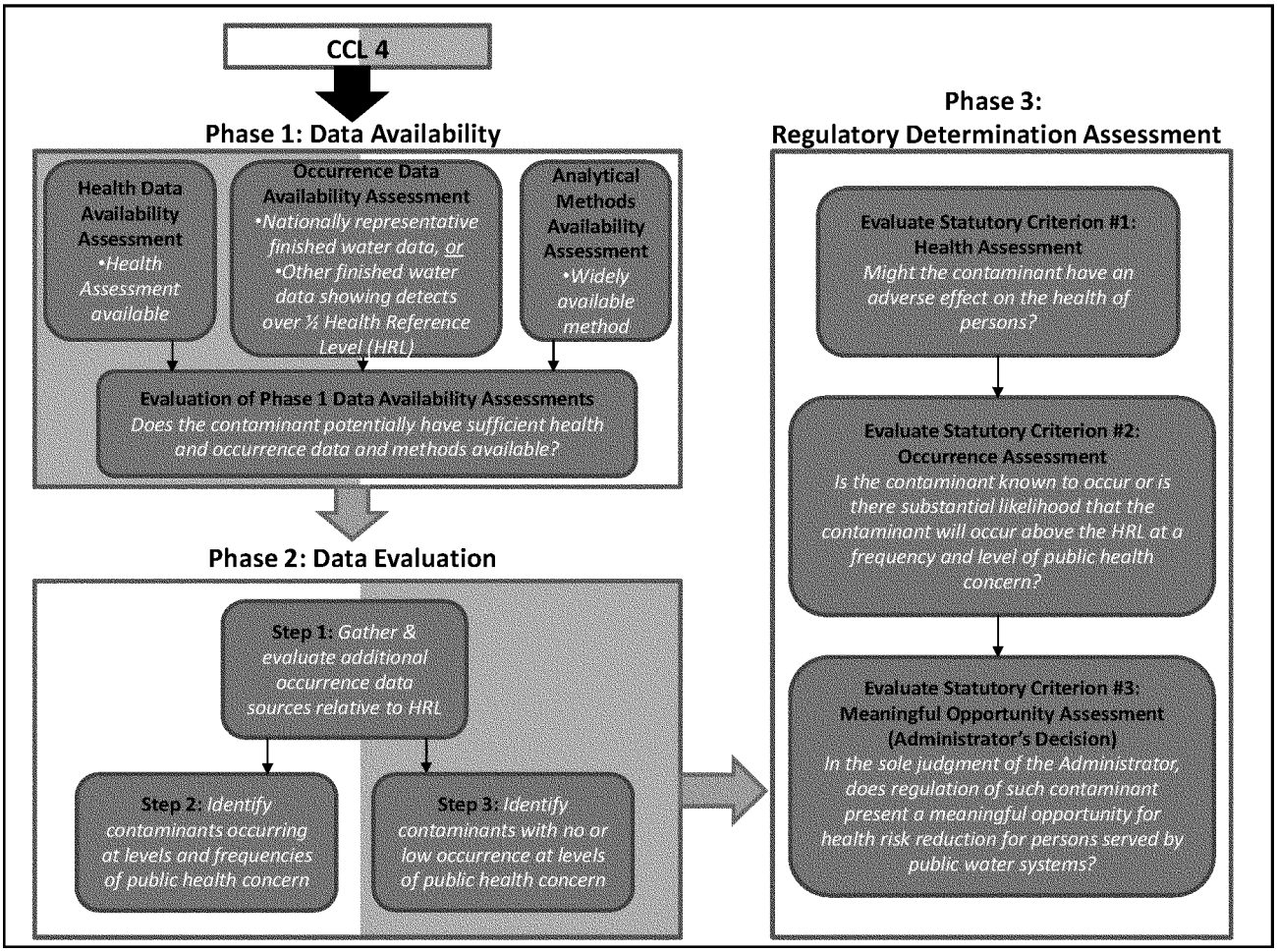

1. Phase 1 (Data Availability Phase)

In Phase 1, the *Data Availability Phase,* the Agency identifies contaminants that have sufficient health and occurrence data to proceed to Phase 2 and be listed on a ''short list'' for further evaluation. SDWA 1412(b)(1)(B)(ii)(II) requires that the EPA consider the best available public health information in making the regulatory determination.

To identify contaminant health effects data that are sufficient to make a regulatory determination regarding potential adverse health effect(s), the Agency considers whether an EPA health assessment or an externally peer-reviewed health assessment from another Agency is available, from which a health reference level (HRL) [6] sufficient to inform a regulatory determination can be derived. (See Section III.C.1 of this document for information about how HRLs are derived.) Consistent with SDWA 1412.b.(3)(A)(i), EPA used health assessments to derive an HRL that the Agency has concluded are the best available peer reviewed science finalized before March 1, 2019. EPA establishes a cutoff date where it no longer considers new health-based information in order to allow for timely determinations and reviews. The EPA did not use draft health assessments to derive HRLs. Sources of health assessments may include: (a) EPA's Office of Water (OW) health assessments: Health Advisory (HA) Documents and Health Effects Support Documents (HESDs); (b) EPA's Office of Research and Development (ORD) Integrated Risk Information System (IRIS) assessments; (c) EPA's ORD Provisional Peer-Reviewed Toxicity Values (PPRTVs); (d) EPA's Office of Pesticide Programs (OPP) health assessments: Reregistration Eligibility Decisions (REDs), Interim Reregistration Eligibility Decisions (IREDs), Tolerance Reassessment Progress and Risk Management Decisions (TREDs), and Health Effects Division Human Health Risk Assessments (HED HHRAs); (e) U.S. Department of Health and Human Services' Agency for Toxic Substances and Disease Registry (ATSDR) Toxicological Profiles; (f) Health Canada Guidelines for Drinking Water; (g) the World Health Organization (WHO) Drinking Water Guidelines; and (h) publicly available state assessments that have been externally peer-reviewed and provide new science not considered in the other RD 4 assessment sources listed above. To support a regulatory determination, the EPA evaluates whether a health assessment used methods, standards, and guidelines comparable to those of current EPA guidelines and guidance documents. If a suitable health assessment is not available for a contaminant, the

[6] An HRL is a health-based concentration against which the Agency evaluates occurrence data when making decisions about preliminary regulatory determinations. An HRL is not a final determination on establishing a protective level of a contaminant in drinking water for a particular population; it is derived prior to development of a complete health and exposure assessment and can be considered a screening value.

contaminant will not proceed to Phase 2. The EPA is aware of draft health assessments that have not yet been finalized for contaminants on which the EPA is making a preliminary determination today. Once finalized, the EPA will consider these new sources of information in future regulatory decision making.

To identify contaminant occurrence data that are sufficient to make a regulatory determination regarding the frequency and level of occurrence in PWSs, the Agency considers nationally representative finished water data (samples are collected after the water undergoes treatment). The following sources, administered or overseen by the EPA, include finished water occurrence data that are considered nationally representative: (a) The Third Unregulated Contaminant Monitoring Rule (UCMR 3); (b) the Second Unregulated Contaminant Monitoring Rule (UCMR 2); (c) the First Unregulated Contaminant Monitoring Rule (UCMR 1); (d) the Unregulated Contaminant Monitoring (UCM) program; and (e) the National Inorganics and Radionuclides Survey (NIRS).[7]

If nationally representative data are not available, the EPA identifies and evaluates other finished water data, which may include other national assessments, regional data, state, and more localized finished water assessments. These other finished water data may include assessments that are geographically distributed across the nation but not intended to be statistically representative of the nation. These other finished water data include: (a) Finished water assessments for Federal agencies (*e.g.,* EPA and the United States Geological Survey (USGS));[8] (b) state-level finished water monitoring data; (c) research performed by institutions, universities, and government scientists (information published in the scientific literature); and/or (d) other supplemental finished water monitoring surveys (*e.g.,* Pesticide Monitoring Program (PMP), and other targeted surveys or localized state/federal monitoring surveys).

The EPA prefers to have nationally representative data when making regulatory determinations but may also use other sources of finished water data to address the occurrence-related aspects of the statutory criteria when deciding to regulate a contaminant. In Phase 1, the Agency does this by assessing whether the non-nationally-representative finished water occurrence data show at least one detection in finished water at levels >½ the HRL[9] for the critical endpoint. If a contaminant has nationally representative or non-nationally representative finished water occurrence data showing at least one detection >½ HRL, the contaminant passes the Occurrence Data Availability Assessment and proceeds to the next phase of analysis. However, it is difficult to determine that a contaminant is not occurring or not likely to occur based on sources of non-nationally representative finished water occurrence data because the data are limited in scope and the contaminant could be occurring in other parts of the country that were not monitored.

In certain limited cases, a contaminant's occurrence data may have been gathered using a specialized or experimental method that is not in general use. If a widely available analytical method does not exist, the contaminant will not be a viable candidate for regulation with a Maximum Contaminant Level (MCL). With that in mind, in the Analytical Methods Availability Assessment, the EPA determines for each contaminant whether a widely available analytical method for monitoring exists. (A widely available analytical method is a method employing technology that is commonly in use at numerous drinking water laboratories.) If a widely available analytical method exists, the contaminant passes the Analytical Methods Availability Assessment. If a widely available analytical method does not exist, the EPA may advance the contaminant to Phase 2 if the Agency determines that indicator or surrogate monitoring, or use of a treatment technique (TT), could allow for effective regulation and there is compelling evidence of occurrence.

In addition to considering contaminants individually, the EPA also may consider issuing a regulatory determination for groups of contaminants. The EPA has regulated certain contaminants in drinking water collectively.

After conducting the health and occurrence data availability assessments, the Agency identifies those contaminants and contaminant groups that meet the following Phase 1 data availability criteria:

(a) An EPA health assessment or an externally peer-reviewed health assessment from another Agency that conforms with the current EPA guidelines is available, from which an HRL can be derived;

(b) Either nationally representative finished water occurrence data are available, or other finished water occurrence data show occurrence at levels >½ the HRL; and

(c) A widely available analytical method for monitoring is available.

If a contaminant or group meets these three criteria, it is placed on a ''short list'' and proceeds to Phase 2. After evaluating the 109 CCL 4 contaminants and two additional contaminants (4-androstene-3,17-dione and testosterone)[10] in Phase 1, the Agency identified 25 CCL 4 contaminants to evaluate further in Phase 2 (contaminants listed in Table 1).

TABLE 1—CONTAMINANTS PROCEEDING FROM PHASE 1 TO PHASE 2

1,1,1,2-Tetrachloroethane.
1,1-Dichloroethane.
1,2,3-Trichloropropane.
1,4-Dioxane.
Acephate.
Acetochlor.
alpha-Hexachlorocyclohexane.
Aniline.
Chlorate.
Cobalt.
Cyanotoxins.
Legionella pneumophila.
Manganese.
Methyl bromide (Bromomethane).
Metolachlor.
Molybdenum.
Nitrobenzene.
N-Nitrosodiethylamine (NDEA).
N-Nitrosodimethylamine (NDMA).
N-Nitroso-di-n-propylamine (NDPA).
N-Nitrosopyrrolidine (NPYR).
Perfluorooctanesulfonic acid (PFOS).
Perfluorooctanoic acid (PFOA).
RDX.
Vanadium.

The remaining 84 CCL 4 contaminants and two additional contaminants (4-androstene-3,17-dione and testosterone) (listed in Table 2) did not meet one or more of the Phase 1 data availability criteria above and were not considered further for RD 4.

[7] Specific types of UCMR monitoring (*e.g.,* assessment monitoring and sometimes the screening survey) are considered nationally representative. These are described further in Section III.C.2.a.1 of this document.

[8] These may be assessments that are geographically distributed across the nation but not intended to be statistically representative of the nation. Examples include the EPA's 1996 Monitoring Requirements for Public Drinking Water Supplies, also known as the Information Collection Rule (USEPA, 1996), and various USGS water quality surveys.

[9] Note that the ½ HRL threshold is based on a recommendation from the NDWAC working group that provided recommendations on the first regulatory determination effort (USEPA, 2000).

[10] Contaminants monitored under UCMR 3 but not included in CCL 3 or CCL 4.

TABLE 2—CONTAMINANTS NOT PROCEEDING FROM PHASE 1 TO PHASE 2

Has nationally representative finished water data but no health assessment

1,3-Butadiene.
3-Hydroxycarbofuran.
4-Androstene-3,17-dione.
Acetochlor ethanesulfonic acid (ESA).
Acetochlor oxanilic acid (OA).
Alachlor ESA.
Alachlor OA.
Chloromethane (Methyl chloride).
Equilin.
Estradiol (17-beta estradiol).
Estriol.
Estrone.
Ethinyl Estradiol (17-alpha ethynyl estradiol).
Germanium.
Halon 1011 (bromochloromethane).
HCFC–22.
Methyl tert-butyl ether.
Metolachlor ESA.
Metolachlor OA.
n-Propylbenzene.
sec-Butylbenzene.
Tellurium.
Testosterone.

Has available or in process health assessment and other finished drinking water data but no occurrence at levels >½ HRL

1-Butanol.
Acrolein.
Bensulide.
Benzyl chloride.
Captan.
Dicrotophos.
Diuron.
Ethoprop.
Ethylene glycol.
Ethylene thiourea (Maneb 12427382).
Formaldehyde.
Methamidophos.
Methanol.
N-Nitrosodiphenylamine (NDPhA)*.
Oxydemeton-methyl.
Oxyfluorfen.
Permethrin.
Profenofos.
Tebuconazole.
Tribufos.
Vinclozolin.
Ziram.

Has other finished drinking water data but no health assessment

17alpha-estradiol.
Acetaldehyde.
Adenovirus*.
Butylated hydroxyanisole.
Caliciviruses*.
Enterovirus*.
Equilenin.
Erythromycin.
Hexane.
Mestranol.
*Mycobacterium avium**.
*Naegleria fowleri**.
Nonylphenol.
Norethindrone (19-Norethisterone).

TABLE 2—CONTAMINANTS NOT PROCEEDING FROM PHASE 1 TO PHASE 2—Continued

Does not have nationally representative or other finished water data

2-Methoxyethanol.
2-Propen-1-ol.
4,4′-Methylenedianiline.
Acetamide.
Campylobacter jejuni.
Clethodim.
Cumene hydroperoxide.
Dimethipin.
Escherichia coli (O157).
Ethylene oxide.
Helicobacter pylori.
Hepatitis A virus.
Hydrazine.
Nitroglycerin.
N-Methyl-2-pyrrolidone.
o-Toluidine.
Oxirane, methyl-.
Quinoline.
Salmonella enterica.
Shigella sonnei.
Tebufenozide.
Thiodicarb.
Thiophanate-methyl.
Toluene diisocyanate.
Triethylamine.
Triphenyltin hydroxide (TPTH).
Urethane.

* Does not have a widely available analytical method for occurrence monitoring.

2. Phase 2 (Data Evaluation Phase)

In Phase 2, the Agency collects additional data on occurrence (including finished water data; ambient water data; data on use, production, and release; and information on environmental fate and transport), and more thoroughly evaluates this information (based on factors below) to identify contaminants that should proceed to Phase 3.

In Phase 2, the Agency focuses its efforts to identify those contaminants or contaminant groups that are occurring or have substantial likelihood to occur at levels and frequencies of public health concern. As noted in Section III.A, SDWA 1412.b.1.C requires that the Administrator select contaminants that present the greatest public health concern. To identify such contaminants, the Agency considers the following information:

(a) How many samples (number and percentage) have detections > HRL and ½ HRL in the nationally representative and other finished water occurrence data?

(b) How many systems (number and percentage) have detections > HRL and ½ HRL in the nationally representative and other finished water occurrence data?

(c) Are there uncertainties or limitations with the data and/or analyses, such as the age of the dataset, the detection limit level (*i.e.,* minimum reporting level [MRL[11]] > HRL), and/or representativeness of the data (*e.g.,* limited to a specific region) that may cause misestimation of occurrence in finished water at levels and frequency of public health concern?

After identifying contaminants that are occurring at levels and frequencies of public health concern to proceed to Phase 3, the Agency evaluates the remaining contaminants on the ''short list'' to determine which contaminants have no or low occurrence at levels of health concern that should proceed to Phase 3 for a potential negative determination. Because the primary goal of RD 4 is to focus on contaminants of public health concern, potential negative determinations are a lower priority than potential positive determinations. The Agency considers the following information in selecting contaminants of no or low potential for public health concern to proceed to Phase 3:

(a) Does the contaminant have nationally representative finished water data showing no or low number or percent of detections > HRL?

(b) If a contaminant has other finished water data in addition to nationally representative finished water data, does it support no or low potential for occurrence in drinking water?[12]

(c) Does additional occurrence information of high quality support the conclusion that there is low or no occurrence or potential for occurrence in drinking water? For example, is the occurrence in ambient/source water at levels below the HRL? How are releases to the environment or use/production changing over time?

(d) Are critical gaps in health and occurrence information/data minimal?

After evaluating the ''short list'' contaminants (listed in Table 1), the Agency identified 10 CCL 4 contaminants to proceed to Phase 3 (listed in Table 3). The contaminants are within one of the following Phase 2 data evaluation categories:

(a) A contaminant or part of a contaminant group occurring or likely to

[11] The MRL is the minimum concentration that is required to be reported quantitatively in a study. The MRL is set at a value that takes into account typical laboratory capabilities to reliably and cost-effectively detect and quantify a compound.

[12] Note that other finished water data (*i.e.,* non-nationally-representative occurrence data) tend to be limited in scope and the EPA does not use these data alone to support a determination that the contaminant is not or is not substantially likely to ''occur in PWSs with a frequency and at levels of public health concern,'' which would therefore be a decision ''not to regulate'' (*i.e.,* negative determination).

occur at levels and frequencies of public health concern, or

(b) A contaminant not occurring or not likely to occur at levels and frequencies of public health concern and no data gaps.

TABLE 3—CONTAMINANTS PROCEEDING FROM PHASE 2 TO PHASE 3

1,1-Dichloroethane.
1,4-Dioxane.
1,2,3-Trichloropropane.
Acetochlor.
Methyl Bromide.
Metolachlor.
Nitrobenzene.
PFOA.
PFOS.
RDX.

Note that the Agency does not have a threshold for occurrence in drinking water that triggers whether a contaminant is of public health concern. A determination of public health concern requires a consideration of a number of factors, some of which include the health effect(s), the potency of the contaminant, the level at which the contaminant is found in drinking water, the frequency at which the contaminant is found, the geographic distribution (national, regional, or local occurrence), other possible sources of exposure, and potential impacts on sensitive populations or lifestages. Given the many possible combinations of factors, a simple threshold is not viable. In the end, a determination of whether there is a meaningful opportunity for health risk reduction by regulation of a contaminant in drinking water is a highly contaminant-specific decision that takes into consideration multiple factors.

The remaining 15 CCL 4 contaminants (listed in Table 4) did not proceed to Phase 3 and were not considered for RD 4 because of one or more of the following critical health, occurrence, and/or other data gaps:

(a) An updated health assessment completed by March 1, 2019 was not identified;

(b) Critical health effects gap (*e.g.,* lack of data to support quantification for the oral route of exposure);

(c) Lack of nationally representative finished water occurrence data and lack of sufficient other data to demonstrate occurrence at levels and frequencies of public health concern; and

(d) Critical occurrence data limitation or gap (*e.g.,* inconsistent results and/or trends in occurrence data requiring further research; significant uncertainty in occurrence analyses and/or data).

Table 4 identifies the health, occurrence, and/or other data gaps that prevented the following 15 contaminants from moving forward for RD 4. The Agency continues to conduct research and collect information to fill the data and information gaps identified in Table 4.

TABLE 4—DATA AND RATIONALE SUMMARY OF THE 15 CONTAMINANTS IN PHASE 2 NOT PROCEEDING TO PHASE 3

Number	Contaminant	Health data available	Occurrence data available	Rationale
1	1,1,1,2-Tetrachloroethane	Yes	Yes	Health data gap (a review of the current literature is needed to decide if an update to the 1987 IRIS health assessment is warranted).
2	Acephate	Yes	No	Occurrence data gaps (no nationally representative finished water data or sufficient other finished water data).
3	alpha-Hexachlorocyclohexane	Yes	No	Occurrence data gaps (no nationally representative finished water data or sufficient other finished water data).
4	Aniline	Yes	No	Occurrence data gaps (no nationally representative finished water data or sufficient other finished water data).
5	Chlorate			Will be evaluated and considered as part of the review of the existing Disinfectants/Disinfection Byproducts (D/DBP) rules.[13 14]
6	Cobalt	Yes	Yes	Health data gap (updated health assessment needed to consider new subchronic and developmental studies).
7	Cyanotoxins	Yes	No	Health advisories available for some specific cyanotoxins (microcystins and cylindrospermopsin); occurrence data gaps (insufficient nationally representative finished water data or other finished water data). Certain cyanotoxins are being monitored under UCMR 4 but final UCMR 4 data will not be complete in time for preliminary determination.
8	*Legionella pneumophila*	Yes	No	MCLG available; occurrence data gaps (no nationally representative finished water data or sufficient other finished water data). Will be evaluated and considered as part of the review of the existing SWTR.[14]
9	Manganese	No	No	Health and occurrence data gaps (updated health assessment[15] not completed by RD 4 cutoff date). Manganese is being monitored for under UCMR 4 but final UCMR 4 data will not be complete in time for preliminary determination.
10	Molybdenum	No	Yes	Health data gap (updated assessment needed to consider multiple new studies).
11	N-Nitrosodiethylamine (NDEA)			Will be evaluated and considered as part of the review of the existing D/DBP rules.[13]
12	N-Nitrosodimethylamine (NDMA)			Will be evaluated and considered as part of the review of the existing D/DBP rules.[13]
13	N-Nitroso-di-n-propylamine (NDPA).			Will be evaluated and considered as part of the review of the existing D/DBP rules.[13]
14	N-Nitrosopyrrolidine (NPYR)			Will be evaluated and considered as part of the review of the existing D/DBP rules.[13]

TABLE 4—DATA AND RATIONALE SUMMARY OF THE 15 CONTAMINANTS IN PHASE 2 NOT PROCEEDING TO PHASE 3—Continued

Number	Contaminant	Health data available	Occurrence data available	Rationale
15	Vanadium	Yes	Yes	Health data gap; undergoing assessment by EPA IRIS: *https://www.epa.gov/sites/production/files/2019-04/documents/iris_program_outlook_apr2019.pdf.*

3. Phase 3 (Regulatory Determination Assessment Phase)

Phase 3, the Regulatory Determination Assessment Phase, involves a complete evaluation of the statutory criteria for each contaminant or group of contaminants that proceed from Phase 2 and have sufficient information and data for making a regulatory determination. In this phase, the Agency evaluates the following statutory criteria (SDWA 1412(b)(1)(A)):

(a) Statutory Criterion #1—The contaminant may have an adverse effect on the health of persons. To evaluate criterion #1, the EPA evaluates whether a contaminant has an EPA health assessment, or an externally peer-reviewed health assessment from another Agency that is publicly available and conforms with current the EPA guidelines, from which an HRL can be derived. The HRL derived in or from the health assessment takes into account the MOA, the critical health effect(s), the dose-response relationship for critical health effect(s), and impacts on sensitive population(s) or lifestages. HRLs are preliminary health-based concentrations against which occurrence data is evaluated to determine if contaminants may occur at levels of potential public health concern. HRLs are not final determinations on establishing a protective level of a contaminant in drinking water for any particular population. HRLs are derived prior to the development of a complete health and exposure assessment and can be considered screening-level values.

If an acceptable health assessment that demonstrates adverse health effects is available, the Agency answers ''yes'' to the first statutory criterion. Otherwise, the Agency answers ''no'' to the first statutory criterion. (In practice, it is expected that any contaminant that reaches Phase 3 would receive a ''yes'' to the first criterion.)

(b) Statutory Criterion #2—The contaminant is known to occur or there is a substantial likelihood that the contaminant will occur in public water systems with a frequency and at levels of public health concern. The EPA compares the occurrence data for each contaminant to the HRL to determine if the contaminant occurs at a frequency and levels of public health concern. The types of occurrence data used at this stage are described in section III.C.2, Evaluation of Contaminant Occurrence and Exposure. The Agency may consider the following factors when identifying contaminants or contaminant groups that are occurring at frequencies and levels of public health concern:

- How many samples (number and percentage) have detections > HRL in the nationally representative and other finished water occurrence data?
- How many systems (number and percentage) have detections > HRL in the nationally representative and other finished water occurrence data?
- Is the geographic distribution of the contaminant occurrence national, regional, or localized?
- In addition to the number of systems, what type of systems does the contaminant occur in? Does the contaminant occur in large or small systems? Does the contaminant occur in surface or groundwater systems?
- Are there significant uncertainties or limitations with the data and/or analyses, such as the age of the dataset, the detection limit level (*i.e.,* MRL > HRL), and/or representativeness of the data (*e.g.,* limited in scope to a specific region)?

Additional, less important factors that the Agency considers when identifying contaminants or contaminant groups that are occurring at frequencies and levels of public health concern also include:

- How many samples (number and percentage) have detections > ½ HRL in the nationally representative and other finished water occurrence data?
- How many systems (number and percentage) have detections > ½ HRL in the nationally representative and other finished water occurrence data?
- How many samples (number and percentage) have detections > HRL and ½ HRL in the ambient/source water occurrence data?
- How many monitoring sites (number and percentage) have detections > HRL and ½ HRL in the ambient/source water occurrence data?
- Are production and use trends for the contaminant increasing or decreasing?
- How many pounds are discharged annually to surface water and/or released to the environment?
- Do the environmental fate and transport parameters indicate that the contaminant would persist and/or be mobile in water?
- Is the contaminant introduced by water treatment processes that provide public health benefits such that it is relevant to risk-balancing considerations?
- Are there additional uncertainties or limitations with the data and/or analyses that should be considered?

If a contaminant is known to occur or substantially likely to occur at a frequency and level of health concern in public water systems based on consideration of the factors listed above, then the Agency answers ''yes'' to the second statutory criterion.

(c) Statutory Criterion #3—In the sole judgment of the Administrator, regulation of the contaminant presents a meaningful opportunity for health risk reduction for persons served by public water systems. The EPA evaluates the population exposed at the health level of concern along with several other

[13] Under RD 3 (79 FR 62716), the EPA noted that disinfection byproducts (DBPs) need to be evaluated collectively, because the potential exists that the treatment used to control a specific DBP could affect the concentrations of other DBPs and potentially microorganisms.

[14] Under the Six-Year Review 3 (82 FR 3518, USEPA, 2016c), the Agency completed a detailed review of 76 NPDWRs and determined that eight NPDWRs were candidates for regulatory revision. The eight NPDWRs are included in the Stage 1 and the Stage 2 Disinfectants and Disinfection Byproducts Rules, the Surface Water Treatment Rule (SWTR), the Interim Enhanced Surface Water Treatment Rule, and the Long Term 1 Enhanced Surface Water Treatment Rule.

[15] Health Canada finalized their Manganese Guideline for Canadian Drinking Water Quality in June 2019. The Guideline summarizes new health effects information published since the EPA's manganese health assessment in 2004 (*https://www.canada.ca/content/dam/hc-sc/documents/services/publications/healthy-living/guidelines-canadian-drinking-water-quality-guideline-technical-document-manganese/pub-manganese-0212-2019-eng.pdf*).

factors to determine if regulation presents a meaningful opportunity for health risk reduction. Among other things, the EPA may consider the following factors in evaluating statutory criterion #3:

- What is the nature of the health effect(s) identified in statutory criterion #1?
- Are there sensitive populations that may be affected (evaluated either qualitatively or quantitatively [16])?
- Based on the occurrence information for statutory criterion #2, including the number of systems potentially affected, what is the national population exposed or served by systems with levels > HRL and ½ HRL?
- For non-carcinogens, are there other sources of exposure that should be considered (*i.e.,* what is the relative source contribution (RSC) from drinking water)?
- What is the geographic distribution of occurrence (*e.g.,* local, regional, national)?
- Are there any uncertainties and/or limitations in the health and occurrence information or analyses that should be considered?
- Are there any limiting considerations related to technology (*e.g.,* lack of available treatment or analytical methods [17])?

If the Administrator, in his or her sole judgement, determines that there is a meaningful opportunity to reduce risk by regulating the contaminant in drinking water, then the Agency answers ''yes'' to the third statutory criterion.

If the Agency answers ''yes'' to all three statutory criteria in Phase 3 for a particular contaminant, then the Agency makes a positive preliminary determination. Additionally, after identifying compounds occurring at frequencies and levels of public health concern, if any, the Agency may initiate a systematic literature review to identify new studies that may influence the derivation of a Reference Dose (RfD) and/or Cancer Slope Factor (CSF). The list of potentially relevant health effect studies that could affect the derivation of an RfD or CSF identified through the systematic review process would then be placed in the docket at the time of the Preliminary Determination for public comment (discussed further in Section IV of this document).

If, after considering input provided during the public comment period, the Agency again answers ''yes'' to all three statutory criteria, the Agency then makes a positive final determination that regulation is necessary and proceeds to develop an MCLG and NPDWR. The Agency has 24 months to publish a proposed MCLG and NPDWR and an additional 18 months to publish a final MCLG and promulgate a final NPDWR.[18] It should be noted that the analyses associated with a regulatory determination process are distinct from the more detailed analyses needed to develop an NPDWR. Thus, a decision to regulate is the beginning of the Agency's regulatory development process, not the end. For example, the EPA may find at a later point in the regulatory development process, and based on additional or new information, that the contaminant no longer meets the three statutory criteria and may, as a result, withdraw the determination to regulate.

If a contaminant has sufficient information and the Agency answers ''no'' to any of the three statutory criteria, based on the available data, then the Agency considers making a negative determination that an NPDWR is not necessary for that contaminant at that time. A final determination not to regulate a contaminant is, by statute, a final Agency action and is subject to judicial review. If a negative determination or no determination is made for a contaminant, the Agency may decide to develop a HA, which provides non-regulatory concentration values for drinking water contaminants at which adverse health effects are not anticipated to occur over specific exposure durations (*e.g.,* one-day, ten-days, several years, and a lifetime). The EPA's HAs are non-enforceable and non-regulatory and provide technical information to states agencies and other public health officials on health effects, analytical methodologies, and treatment technologies associated with drinking water contamination.

While a negative determination is considered a final Agency action under SDWA for a round of regulatory determinations, the contaminant may be relisted on a future CCL based on newly available health and/or occurrence information.

At this time, the Agency is not making preliminary regulatory determinations for two of the ten contaminants that proceeded to Phase 3. After evaluating the remaining CCL 4 contaminants in Table 3 against the three SDWA criteria and considering the factors listed for each, the Agency is making a preliminary regulatory determination for these eight CCL 4 contaminants. Table 5 provides a summary of the 10 contaminants evaluated for Phase 3 and the preliminary regulatory determination outcome for each. The Agency seeks comment on the preliminary determination to regulate two contaminants (PFOS and PFOA) and to not regulate six contaminants (1,1-dichloroethane, acetochlor, methyl bromide, metolachlor, nitrobenzene, and RDX). Section IV.B of this document provides a more detailed summary of the information and the rationale used by the Agency to reach its preliminary decisions for these contaminants. Section V of this document provides more information about 1,4-dioxane and 1,2,3-trichloropropane, the two Phase 3 contaminants for which the EPA is not making a preliminary regulatory determination at this time.

TABLE 5—CONTAMINANTS EVALUATED IN PHASE 3 AND THE REGULATORY DETERMINATION OUTCOME

Number	RD 3 contaminants	Preliminary determination outcome
1	1,1-Dichloroethane	Do Not Regulate.
2	1,4-Dioxane	No Determination.
3	1,2,3-Trichloropropane.	No Determination.
4	Acetochlor	Do Not Regulate.
5	Methyl Bromide	Do Not Regulate.
6	Metolachlor	Do Not Regulate.
7	Nitrobenzene	Do Not Regulate.
8	PFOA	Regulate.
9	PFOS	Regulate.
10	RDX	Do Not Regulate.

B. Supporting Documentation for EPA's Preliminary Determination

For this action, the EPA prepared several supporting documents that are available for review and comment in the EPA Water Docket. These support documents include:

[16] If appropriate and available, the Agency quantitatively takes into account exposure data applicable to sensitive populations or lifestages when deriving HRLs for regulatory determinations. When data are not available on sensitive populations, the derivation of the RfD typically includes an uncertainty factor to account for the weakness in the database. Additionally, the EPA will use exposure factors relevant to the sensitive population in deriving the HRL. See section III.C.1. Sensitive populations are also qualitatively considered by providing national prevalence estimates for a particular sensitive population, if available.

[17] If the Agency decides to regulate a contaminant, the SDWA requires that the EPA issue a proposed regulation within two years of the final determination. As part of the proposal, the Agency must list best available technologies (BATs), small system compliance technologies (SSCTs), and approved analytical methods if it proposes an enforceable MCL. Alternatively, if the EPA proposes a TT instead of an MCL, the Agency must identify the TT. The EPA must also prepare a health risk reduction and cost analysis. This analysis includes an extensive evaluation of the treatment costs and monitoring costs at a system level and aggregated at the national level. To date, treatment information and approved analytical methods have not been significant factors in regulatory determinations but are important considerations for regulation development.

[18] The statute authorizes a nine-month extension of this promulgation date.

• The comprehensive regulatory support document, *Regulatory Determination 4 Support Document* (USEPA, 2019a), summarizes the information and data on the physical and chemical properties, uses and environmental release, environmental fate, potential health effects, occurrence and exposure estimates, analytical methods, treatment technologies, and preliminary determinations. Additionally, Appendix E of the Regulatory Determinations 4 Support Document describes the approach implemented by the Agency to evaluate the CCL 4 contaminants in a three-phase process and select the contaminants for preliminary determinations for RD 4.

• A comprehensive technical occurrence support document for UCMR 3, *Occurrence Data from the Third Unregulated Contaminant Monitoring Rule (UCMR 3)* (USEPA, 2019b). This occurrence support document includes more detailed information about UCMR 3, how the EPA assessed the data quality, completeness, and representativeness, and how the data were used to generate estimates of drinking water contaminant occurrence in support of these regulatory determinations.

C. Analyses Used To Support the Preliminary Regulatory Determinations

Sections III.C.1 and 2 of this action outline the health effects and occurrence/exposure evaluation process the EPA used to support these preliminary determinations.

1. Evaluation of Adverse Health Effects

This section describes the approach for deriving the HRL for the contaminants under consideration for regulatory determinations. HRLs are health-based drinking water concentrations against which the EPA evaluates occurrence data to determine if contaminants occur at levels of potential public health concern. HRLs are not final determinations on establishing a protective level of a contaminant in drinking water for any particular population and are derived prior to the development of a complete health and exposure assessment. More specific information about the potential for adverse health effects for each contaminant is presented in section IV.B of this action.

a. Derivation of an HRL

There are two general approaches to the derivation of an HRL. One general approach is used for chemicals with a threshold dose-response (usually involving non-cancer endpoints, and occasionally cancer endpoints). The second general approach is used for chemicals that exhibit a linear, non-threshold response to dose (as is typical of carcinogens). A variant of the second approach is used when a carcinogen with a linear dose-response has a known mutagenic MOA (USEPA, 2019a).

HRLs for contaminants with a threshold dose-response (typically non-cancer endpoints) are calculated as follows:

$$HRL = RfD * \frac{BW}{DWI} * RSC$$

HRLs for contaminants with a linear dose-response (typically cancer endpoints) are calculated as follows:

$$HRL = \frac{CRL}{CSF} * \frac{BW}{DWI}$$

HRLs for carcinogenic contaminants with a known mutagenic MOA are calculated as follows:

$$HRL = \frac{CRL}{CSF} * \frac{1}{\sum_i \left(\frac{DWI_i}{BW_i} * f_i * ADAF_i\right)}$$

Where:

HRL = Health Reference Level (μg/L)
RfD = Reference Dose (mg/kg/day)
DWI = Drinking Water Intake (L)
BW = Body weight (kg)
CSF = Cancer Slope Factor $(mg/kg/day)^{-1}$
CRL = Cancer risk level, assumed to be 1 in a million (1×10^{-6})
ADAF = The Age Dependent Adjustment Factor for the age group *i* (by default, ADAF = 10 from birth to two years of age; ADAF = 3 from two to sixteen years of age; ADAF = 1 from sixteen to seventy years of age)
f = fraction of applicable period of exposure (by default, lifetime of seventy years) represented by age group *i*
RSC = Relative Source Contribution, which is the portion (percentage) of an individual's exposure attributed to drinking water rather than other sources (*e.g.,* food, ambient air). In Regulatory Determination, a 20% RSC is used for HRL derivation because (1) HRLs are developed prior to a complete exposure assessment, and (2) 20% is the lowest and most conservative RSC used in the derivation of an MCLG for drinking water.

b. Protection of Sensitive Subpopulations

In prioritizing the contaminants of greatest public health concern for regulatory determination, Section 1412(b)(1)(C) of SDWA requires the Agency to consider ''among other factors of public health concern, the effect of such contaminants upon subgroups that comprise a meaningful portion of the general population (such as infants, children, pregnant women, the elderly, individuals with a history of serious illness, or other subpopulations) that are identifiable as being at greater risk of adverse health effects due to exposure to contaminants in drinking water compared to the general population.'' If appropriate and if adequate data are available, the Agency will use data from sensitive populations and lifestages quantitatively when deriving HRLs for regulatory determinations in the following manner:

(a) For non-carcinogens, an HRL can be developed for a sensitive population if data are available to associate exposure with the critical health endpoint in a specific group or during a specific period of sensitivity. Age-specific drinking water intake (DWI) to body weight (BW) ratio values from the *Exposure Factors Handbook* (USEPA, 2011b) can be used to reflect the period of exposure more accurately. The Agency can also apply specific uncertainty factors (UFs) when deriving the RfD if toxicological data are lacking for a sensitive population. Two common justifications for UFs that can be applied to account for sensitive populations are: (1) Variation in sensitivity among the members of the human population (*i.e.,* intraspecies variability) and (2) uncertainty associated with an incomplete database.

(b) For HRLs developed for carcinogens with a mutagenic MOA, the 2005 Cancer Guidelines require consideration of increased risks due to early-life exposure. When chemical-specific data to quantify the increased risk are lacking, Age Dependent Adjustment Factors (ADAFs) are applied, generally with a 10-fold adjustment for early life exposures, a 3-fold adjustment for childhood/adolescent exposures, and no additional adjustment for exposures later in life (as shown above). Age-specific drinking-water-intake-to-body-weight ratio values are also applied from the *Exposure Factors Handbook* (USEPA, 2011b). In cases where the data on the MOA are lacking, the default low-dose linear extrapolation approach without ADAFs is used.

While this action is not subject to Executive Order 13045: Protection of Children from Environmental Health and Safety Risks, the Agency's Policy on Evaluating Health Risks to Children (USEPA, 1995a), recently reaffirmed by Administrator Wheeler (USEPA, 2018a), was still applied for the RD 4 preliminary determination. The EPA's policy (USEPA, 1995a) requires the EPA to consistently and comprehensively address children's unique vulnerabilities. For example, if exposure to a contaminant considered for RD 4 was associated with a developmental

effect, the EPA derived HRLs using the exposure factors for a bottle-fed infant to be protective of children, assuming that the adverse effect identified could occur during the window of time when the infant is formula-fed (see metolachlor in Section IV.B as an example).

c. Sources of Data/Information for Health Effects

The EPA relies on health assessments produced by the Agency itself and produced by other agencies. The criteria for accepting a health assessment for RD 4 are described in Section III.A.1, above. Table 6 summarizes the sources of the health assessment data for each chemical with a preliminary determination under RD 4. As noted in Section III.A.3, in the case of potential positive determinations, the EPA searches for and evaluates additional data and information from the published literature to supplement the health assessment (Note that the two Phase 3 contaminants that are not receiving a preliminary determination are not discussed here. They are 1,4-dioxane and 1,2,3-trichloropropane. See section V of this document for more on those two contaminants.)

Table 6. Sources of Data/Information for Health Effects

Chemical	EPA IRIS	EPA OW Assessment	EPA OPP Human Health Risk Assessment (HHRA)	EPA ORD Provisional Peer-Reviewed Toxicity Value (PPRTV)	Agency for Toxic Substances and Disease Registry (ATSDR)	California EPA	Health Canada	World Health Organization (WHO)
1 1,1-Dichloroethane	1990			2006	2015	2003		2003
2 Acetochlor	1993		2018					
3 Methyl Bromide (Bromomethane)	1988	1989	2006	2007	1992			
4 Metolachlor	1990	1988	2018				1990	2003
5 Nitrobenzene	2009				1990			2009
6 RDX	2018	1992			2012			
7 PFOA		2016				2019	2018	
8 PFOS		2016				2019	2018	

2. Evaluation of Contaminant Occurrence and Exposure

The EPA uses data from many sources to evaluate occurrence and exposure from drinking water contaminants. The following comprise the primary sources of finished drinking water occurrence data discussed in this **Federal Register** document:

- Unregulated Contaminant Monitoring Rules (UCMR 1, 2, and 3)
- UCM Program Rounds 1 and 2, and
- Data collected by states.

Several of the primary sources of finished water occurrence data are designed to be statistically representative of the nation. These data sources include UCMR 1, UCMR 2, and UCMR 3.

The Agency also evaluates supplemental sources of information on occurrence in drinking water, occurrence in ambient and source water, and information on contaminant production and release to augment and complement these primary sources of drinking water occurrence data. Section III.C.2.a. of this action provides a brief summary of the primary sources of finished water occurrence data, and sections III.C.2.b and II.C.2.c provide brief summary descriptions of some of the supplemental sources of occurrence information and/or data. These descriptions do not cover all the sources that the EPA reviews and evaluates. For individual contaminants, the EPA reviews additional published reports and peer-reviewed studies that may provide the results of monitoring efforts in limited geographic areas. A summary of the occurrence data and the results or findings for each of the contaminants considered for regulatory determination is presented in section IV.B, the contaminant profiles section, and the data are described in further detail in the *Regulatory Determination 4 Support Document* (see USEPA, 2019a).

a. Primary Sources of Finished Drinking Water Occurrence Data

The following sections provide a brief summary of the finished water occurrence data sources used in RD 4. Table 8 in section IV lists the primary data source/finding used to evaluate each of the eight contaminants considered for regulatory

determinations. Section V of this document provides more information about 1,4-dioxane and 1,2,3-trichloropropane, the two Phase 3 contaminants for which the EPA is not making a preliminary regulatory determination at this time. The contaminant-specific discussions in section IV provide more detailed information about the primary data source findings as well as any supplemental occurrence information.

(1) The Unregulated Contaminant Monitoring Rules (UCMR 1, UCMR 2, and UCMR 3)

The UCMR is the EPA's primary vehicle for collecting monitoring data on the occurrence of unregulated contaminants in PWSs. SDWA section 1412(b)(1)(B)(ii)(II) requires that the EPA include consideration of the data produced by the UCMR program in making regulatory determinations. The UCMR list is published every five years and is designed to collect nationally representative occurrence data that is developed in coordination with the CCL and Regulatory Determination processes. The UCMR sampling is limited by statute to no more than 30 contaminants every five years (SDWA section 1445(a)(2)). PWSs and state primacy agencies are required to report the data to the EPA. The EPA published the lists and requirements for the UCMR 1 on September 17, 1999 (64 FR 50556, September 17, 1999, USEPA, 1999), and the monitoring was conducted primarily during 2001–2003. UCMR 2 was published on January 4, 2007 (72 FR 367; USEPA, 2007a), with monitoring conducted primarily during 2008–2010. UCMR 3 was published on May 2, 2012 (77 FR 26071; USEPA, 2012a), with monitoring conducted primarily during 2013–2015. (The complete analytical monitoring lists are available at: *http://water.epa.gov/lawsregs/rulesregs/sdwa/ucmr/*.) UCMR 4 was published on December 20, 2016 (81 FR 92666), with monitoring conducted between 2018 and 2020 (final UCMR 4 data is not complete in time for this RD 4 preliminary determination).

The UCMR program is designed as a three-tiered approach for monitoring contaminants related to the availability and complexity of analytical methods, laboratory capacity, sampling frequency, relevant universe of PWSs, and other considerations (*e.g.,* cost/burden). Assessment Monitoring (AM) includes the largest number of PWSs and is generally used when there is sufficient laboratory capacity. The Screening Survey (SS) includes a smaller number of PWSs to conduct monitoring and may be used, for example, when there are possible laboratory capacity issues for the analytical methods required. Pre-Screen Testing (PST) is generally used to collect monitoring information for contaminants with analytical methods that are in an early stage of development, and/or very limited laboratory availability.

The EPA designed the AM sampling frame to ensure that sample results would support a high level of confidence and a low margin of error (see USEPA, 1999 and 2001a, for UCMR design details). AM is required for all large and very large PWSs, those serving between 10,001 and 100,000 people and serving more than 100,000 people, respectively (*i.e.,* a census of all large and very large systems) and a national statistically representative sample of 800 small PWSs, those serving 10,000 or fewer people.[19] PWSs that purchase 100% of their water were not required to participate in UCMR 1 and UCMR 2. However, those systems were not excluded under UCMR 3. All systems that purchase 100% of their water and serve more than 10,000 people were subject to UCMR 3. Systems that purchase 100% of their water and serve a retail population of 10,000 or fewer customers were only required to monitor if they were selected as part of the UCMR 3 nationally representative sample of small systems.

Each system conducts UCMR assessment monitoring for 12-consecutive months (during the three-year monitoring period). The rules typically require quarterly monitoring for surface water systems and twice-a-year, six-month interval monitoring for groundwater systems. At least one sampling event must occur during a specified vulnerable period. Differing sampling points within the PWS may be specified for each contaminant related to the contaminants source(s).

The objective of the UCMR sampling approach for small systems was to collect contaminant occurrence data from a statistically-selected, nationally representative sample of small systems. The small system sample was stratified and population-weighted, and included some other sampling adjustments such as allocating a selection of at least two systems from each state for spatial coverage (the design meets the data quality objective for overall exposure estimates (99% confidence level with ±1% error tolerance, at 1% exposure), while providing more precise occurrence estimates for categories of small systems). The UCMR AM program includes systems from all 50 states, the District of Columbia, all five U.S. territories, and tribal lands across all of the EPA regions. With contaminant monitoring data from all large PWSs—a census of large systems—and a statistical, nationally representative sample of small PWSs, the UCMR AM program provides a robust dataset for evaluating national drinking water contaminant occurrence.

UCMR 1 AM was conducted by approximately 3,090 large systems and 797 small systems. Approximately 33,800 samples were collected for each contaminant. In UCMR 2, sampling was conducted by over 3,300 large systems and 800 small systems and resulted in over 32,000 sample results for each contaminant.

As noted, in addition to AM, SS monitoring was required for contaminants. For UCMR 1, the SS was conducted at 300 PWSs (120 large and 180 small systems) selected at random from the pool of systems required to conduct AM. Samples from the 300 PWSs from throughout the nation provided approximately 2,300 analyses for each contaminant. While the statistical design of the SS is national in scope, the uncertainty in the results for contaminants that have low occurrence is relatively high. Therefore, the EPA looked for additional data to supplement the SS data for regulatory determinations.

For the UCMR 2 SS, the EPA improved the design to include a census of all systems serving more than 100,000 people (approximately 400 PWSs—but the largest portion of the national population served by PWSs) and a nationally representative, statistically selected sample of 320 PWSs serving between 10,001 and 100,000 people, and 480 small PWSs serving 10,000 or fewer people (72 FR 367, January 4, 2007, USEPA, 2007a). With approximately 1,200 systems participating in the SS, sufficient data were generated to provide a confident national estimate of contaminant occurrence and population exposure. In UCMR 2, the 1,200 PWSs provided more than 11,000 to 18,000 analyses (depending on the sampling design for the different contaminants).

For UCMR 3, all large and very large PWSs (serving between 10,001 and 100,000 people and serving more than 100,000 people, respectively), plus a statistically representative national sample of 800 small PWSs (serving

[19] Section 1445 of the Safe Drinking Water Act was recently amended by Public Law 115–270, America's Water Infrastructure Act of 2018 (AWIA), and now specifies that, effective October 23, 2021, subject to the availability of appropriations for such purpose and appropriate laboratory capacity, the EPA must require all systems serving between 3,300 and 10,000 persons to monitor and ensure that only a representative sample of systems serving fewer than 3,300 persons are required to monitor.

10,000 people or fewer), conducted AM. UCMR 3 SS monitoring was conducted by all large systems serving more than 100,000 people, a nationally representative sample of 320 large systems serving 10,001 to 100,000 people, and a nationally representative sample of 480 small water systems serving 10,000 or fewer people. In contrast to implementation of UCMR 1 and 2 monitoring, transient noncommunity water systems that purchase all their finished water from another system were not excluded from the requirements of UCMR 3 (this was applicable only to PST). See USEPA (2012a) and USEPA (2019b) for more information on the UCMR 3 study design and data analysis.

As previously noted, the details of the occurrence data and the results or findings for each of the contaminants considered for regulatory determination are presented in Section IV.B, the contaminant profiles section, and are described in further detail in the *Regulatory Determination 4 Support Document* (USEPA, 2019a). The national design, statistical sampling frame, any new analytical methods, and the data analysis approach for the UCMR program has been peer-reviewed at different stages of development (see USEPA, 2001b, 2008b, 2015a, 2019b).

(2) National Inorganics and Radionuclides Survey (NIRS)

The EPA conducted the NIRS to provide a statistically representative sample of the national occurrence of 36 selected inorganic compounds (IOCs) and 6 radionuclides in CWSs served by groundwater. The sample was stratified by system size and 989 groundwater CWSs were selected at random representing 49 states (all except Hawaii) as well as Puerto Rico. The survey focused on groundwater systems, in part because IOCs tend to occur more frequently and at higher concentrations in groundwater than in surface water. Each of the selected CWSs was sampled at a single time between 1984 and 1986.

One limitation of the NIRS is a lack of occurrence data for surface water systems. Information about NIRS monitoring and data analysis is available in *The Analysis of Occurrence Data from the Unregulated Contaminant Monitoring (UCM) Program and National Inorganics and Radionuclides Survey (NIRS) in Support of Regulatory Determinations for the Second Drinking Water Contaminant Candidate List* (USEPA, 2008c). Another potential limitation of the NIRS is the age of the data. Although the NIRS monitoring occurred nearly 35 years ago, results may still provide insight into current conditions, as the presence of IOCs in aquifers depends in large part on equilibrium with stable natural sources in contiguous rock formations.

(3) Unregulated Contaminant Monitoring (UCM) Program Rounds 1 and 2

In 1987, the EPA initiated the UCM program to fulfill a 1986 SDWA Amendment requirement to monitor for specified unregulated contaminants. The UCM required PWSs serving more than 500 people to conduct monitoring. The EPA implemented the UCM program in two phases or rounds. The first round of UCM monitoring generally extended from 1988 to 1992 and is referred to as UCM Round 1 monitoring. The second round of UCM monitoring generally extended from 1993 to 1997 and is referred to as UCM Round 2 monitoring. Information about UCM monitoring and data analysis is available in *The Analysis of Occurrence Data from the Unregulated Contaminant Monitoring (UCM) Program and National Inorganics and Radionuclides Survey (NIRS) in Support of Regulatory Determinations for the Second Drinking Water Contaminant Candidate List* (USEPA, 2008c).

The UCM-State Round 1 dataset contains PWS monitoring results for 62 then-unregulated contaminants (some have since been regulated). These data were collected by 40 states and primacy entities between 1988 and 1992. The Round 2 dataset contains PWS monitoring results for 48 then-unregulated contaminants. These data were collected by 35 states and primacy entities between 1993 and 1997. Since UCM Round 1 and Round 2 data represent different time periods and include occurrence data from different states, the EPA developed separate national cross-sections for each data set. The UCM Round 1 national cross-section, consisting of data from 24 states, includes approximately 3.3 million records from approximately 22,000 unique PWSs. The UCM Round 2 national cross-section, consisting of data from 20 states, includes approximately 3.7 million records from slightly more than 27,000 unique PWSs.

b. Supplemental Sources of Finished Drinking and Ambient Water Occurrence Data

The Agency evaluates several sources of supplemental information related to contaminant occurrence in finished water and ambient and source waters to augment the primary drinking water occurrence data. Some of these sources were part of other Agency information gathering efforts or submitted to the Agency in public comment or suggested by stakeholders during previous CCL and Regulatory Determination efforts. These supplemental data are useful to evaluate the likelihood of contaminant occurrence in drinking water and/or to more fully characterize a contaminant's presence in the environment and potentially in source water, and to evaluate any possible trends or spatial patterns that may need further review. The descriptions that follow do not cover all the sources that the EPA used. For individual contaminants, the EPA reviewed additional published reports and peer-reviewed studies that may have provided the results of monitoring efforts in limited geographic areas. A more detailed discussion of the supplemental sources of information/data that the EPA evaluated and the occurrence data for each contaminant can be found in the *Regulatory Determination 4 Support Document* (USEPA, 2019a).

(1) Individual States' Data

For RD 4, the Agency evaluated data for unregulated contaminants from the second Six-Year Review of regulated contaminants (USEPA, 2009b), the third Six-Year Review of regulated contaminants (USEPA, 2016c), and individual state websites.

To support the second Six-Year Review of regulated contaminants (USEPA, 2009b), the EPA issued an Information Collection Rule (ICR) to collect compliance monitoring data from PWSs for the time period covering 1998–2005. After issuing the ICR, the EPA received monitoring data from 45 states plus Region 8 and Region 9 Tribes. Six states and Region 9 tribes also provided monitoring data for unregulated contaminants along with their compliance monitoring data. The EPA further collected additional unregulated contaminant data from two additional States that provide monitoring data through their websites.

To support the third Six-Year Review of regulated contaminants (USEPA, 2016c), the EPA issued an ICR to collect compliance monitoring data from PWSs for 2006–2011. After issuing the ICR, 46 states and 8 other primacy agencies provided compliance monitoring data. Nine states, three tribes, Washington, DC, and American Samoa also provided monitoring data for unregulated contaminants along with their compliance monitoring data.

The EPA supplemented these occurrence data for unregulated contaminants by downloading additional and more recent publicly available monitoring data from state websites. Drinking water monitoring

data for select contaminants were available online from several states, including California, Colorado, Michigan, New Hampshire, New Jersey, and North Carolina. Very limited data were also available from Pennsylvania and Washington. The available state data are varied in terms of quantity and coverage. In many cases they represent targeted monitoring.

These datasets vary from state to state in the contaminants included, the number of samples, and the completeness of monitoring. They were reviewed and used to augment the national data and assessed if they provide supportive observations or any unique occurrence results that might warrant further review.

(2) Community Water System Survey (CWSS)

The EPA periodically conducts the CWSS to collect data on the financial and operating characteristics from a nationally representative sample of CWSs. As part of the CWSS, all systems serving more than 500,000 people receive the survey. In the 2000 and 2006 CWSS, these very large systems were asked questions about the occurrence and concentrations of unregulated contaminants in their raw and finished water. The 2000 CWSS (USEPA, 2002a, 2002b) requested data from 83 very large CWSs and the 2006 CWSS (USEPA, 2009c, 2009d) requested data from 94 very large CWSs. Not all systems answered every question or provided complete information on the unregulated contaminants. Because reported results are incomplete, they are illustrative, not representative, and are only used as supplemental information.

(3) United States Department of Agriculture (USDA) Pesticide Data Program (PDP)

Since 1991, the USDA PDP has gathered data on pesticide residues in food. In 2001 the program expanded to include sampling of pesticide residues in treated drinking water, and in 2004 some sampling of raw water was incorporated as well. The PDP drinking water project continued until 2013 (USDA, 2018). The CWSs selected for sampling tended to be small and medium-sized surface water systems (serving under 50,000 people) located in regions of heavy agriculture. The sampling frame was designed to monitor in regions of interest for at least two years to reflect the seasonal and climatic variability during growing seasons. PDP worked with the EPA to identify specific water treatment facilities where monitoring data were collected. The number of sites and samples varied among different sampling periods. The EPA reviewed the PDP data on the occurrence of select contaminants in untreated and treated water (USDA, 2018).

(4) USGS Pilot Monitoring Program (PMP)

In 1999, USGS and the EPA conducted the PMP to provide information on pesticide concentrations in small drinking water supply reservoirs in areas with high pesticide use (Blomquist et al., 2001). The study was undertaken, in part, to test and refine the sampling approach for pesticides in such reservoirs and related drinking water sources. Sampling sites represent a variety of geographic regions, as well as different cropping patterns. Twelve water supply reservoirs considered vulnerable to pesticide contamination were included in the study. Samples were collected quarterly throughout the year and at weekly or biweekly intervals following the primary pesticide-application periods. Water samples were collected from the raw water intake and from finished drinking water taps prior to entering the distribution system. At some sites, samples were also collected at the reservoir outflow.

(5) USGS National Water Quality Assessment (NAWQA)

The USGS instituted the National Water Quality Assessment (NAWQA) program in 1991 to examine ambient water quality status and trends in the United States. The NAWQA program is designed to apply nationally consistent methods to provide a consistent basis for comparisons over time and among significant watersheds and aquifers across the country. These occurrence assessments serve to facilitate interpretation of natural and anthropogenic factors affecting national water quality. The NAWQA program monitors the occurrence of chemicals such as pesticides, nutrients, volatile organic compounds (VOCs), trace elements, radionuclides, hormones and pharmaceuticals, and the condition of aquatic habitats and fish, insects, and algal communities. For more detailed information on the NAWQA program design and implementation, please refer to Leahy and Thompson (1994), Hamilton et al. (2004), and NRC (2012).

The NAWQA program has been designed in ten-year cycles to enable national coverage that can be used for trends and causal assessments. In the Cycle 1 monitoring period, which was conducted from 1991 through 2001, NAWQA collected data from over 6,400 surface water and 6,300 groundwater sampling points. Cycle 2 monitoring covers the period from 2002 through 2012, with various design changes from Cycle 1 (see Hamilton et al., 2004). Sampling for Cycle 3 is currently underway (2013–2023). Surface water monitoring will be conducted at 313 sites while groundwater assessments will be designed to evaluate status and trends at the principal aquifer and national scales. Refer to Rowe et al. (2010; 2013) for more details.

The EPA performed a summary analysis of the Cycle 1, Cycle 2, and available Cycle 3 water monitoring data for the Regulatory Determination process. The surface water data consisted of river and stream samples; for groundwater, all well data were used.

For RD 4, the EPA used and evaluated many USGS NAWQA reports to review causal or spatial factors that USGS may have presented in their interpretations. In particular, the EPA evaluated many reports from the Pesticide National Synthesis Programs (*e.g.,* Gilliom et al., 2007) and the VOC National Synthesis (*e.g.,* Delzer and Ivahnenko, 2003). While there is overlap in the data used in the USGS reports and the EPA analysis, the USGS reports can provide unique observations related to their synthesis of additional data.

For RD 4, the EPA also supplemented these data with information from recent special USGS reports that also used additional data from other programs, particularly reports that focused on contaminant occurrence in source waters for PWSs, such as: Organic compounds in source water of selected CWSs (Hopple et al., 2009 and Kingsbury et al., 2008); water quality in public-supply wells (Toccalino et al., 2010); water quality in domestic wells and principal aquifers (DeSimone, 2009 and DeSimone et al., 2014); nationwide reconnaissance of contaminants of emerging concern (Glassmeyer et al., 2017); water quality in select CWSs (Grady and Casey, 2001); water quality in carbonate aquifers (Lindsey et al., 2008); VOCs in domestic wells (Moran et al., 2002 and Rowe et al., 2007); and VOCs in the nation's groundwater (Zogorski et al., 2006).

(6) National Water Information System (NWIS)

For RD 4, the EPA evaluated contaminant monitoring results from the non-NAWQA data in the National Water Information System (NWIS) (USGS, 2016). NWIS houses the NAWQA data (described above) and includes other USGS data from unspecified projects. The non-NAWQA NWIS data were analyzed separately from NAWQA data.

Although NWIS is comprised of primarily ambient water data, some finished drinking water data are included as well. The non-NAWQA data housed in NWIS generally involve fewer constituents per sample than the NAWQA data. Unlike the NAQWA data, the non-NAWQA data are a miscellaneous collection, so they are not as well-suited for making temporal and geographic comparisons. Most NWIS data are available via the Water Quality Portal (see below).

(7) Water Quality Exchange (WQX)/ Water Quality Portal Data System (Formerly STORET)

The EPA's Water Quality Exchange (WQX) is the data format and mechanism for publishing monitoring data available through the Water Quality Portal. WQX replaces the Storage and Retrieval Data System (STORET) as the mechanism for data partners to submit water monitoring data to the EPA. The Water Quality Portal is the mechanism for anyone, including the public, to retrieve water monitoring data from the EPA WQX/STORET, USDA STEWARDS, and USGS NWIS/ BIODATA. The WQX database contains raw biological, chemical, and physical data from surface and groundwater sampling conducted by federal, state and local agencies, Native American Tribes, volunteer groups, academics, and others. WQX includes data from monitoring locations in all 50 states as well as multiple territories and jurisdictions of the United States. Most data are from ambient waters, but in some cases finished drinking water data are included as well. Data owners are responsible for providing data of documented quality, so that data users can choose to access only those data collected and analyzed with data quality objectives that meet their study needs. For more general WQX data information, please refer to: *https://www.epa.gov/waterdata/water-quality-data-wqx.* To retrieve the data, please refer to: *https://www.waterqualitydata.us/portal/.*

c. Supplemental Production, Use, and Release Data

The Agency reviews various sources of information to assess if there are changes or trends in a contaminant's production, use, and release that may affect its presence in the environment and potential occurrence in drinking water. The cancellation of a pesticide or a clear increase in production and use of a contaminant are trends that can inform the regulatory determination process. Several sources are described below. A more detailed discussion of the supplemental sources of information/data that the EPA evaluated and the occurrence data for each contaminant can be found in the *Regulatory Determination 4 Support Document* (USEPA, 2019a).

(1) Inventory Update Reporting (IUR) and Chemical Data Reporting (CDR) Program

The IUR regulation required manufacturers and importers of certain chemical substances, included on the Toxic Substances Control Act (TSCA) Chemical Substance Inventory, to report site and manufacturing information and the amount of chemicals produced or imported in amounts of 25,000 pounds or more at a single site. Additional information on domestic processing and use was required to be reported for chemicals produced or imported in amounts of 300,000 pounds or more at a single site. Prior to the 2003 TSCA Amendments (*i.e.,* reporting from 2002 or earlier), information was collected for only organic chemicals that were produced or imported in amounts of 10,000 pounds or more, and was limited to more basic manufacturing information such as production volume. In 2011 the Agency issued the CDR Rule, which replaced the IUR Rule and established a somewhat modified program, including annual data gathering and periodic reporting. CDR makes use of a two-tiered system of reporting thresholds, with 25,000 pounds the threshold for some contaminants and 2,500 pounds the threshold for others. Contaminants may have reports for some years but not others (USEPA, 2008d; USEPA, 2016d).

(2) Toxics Release Inventory (TRI)

The EPA established the Toxics Release Inventory (TRI) in 1987 in response to Section 313 of the Emergency Planning and Community Right-to-Know Act (EPCRA). EPCRA Section 313 requires facilities to report annual information on toxic chemical releases from facilities that meet reporting criteria to both the EPA and the states. The TRI database details not only the types and quantities of toxic chemicals released to the air, water, and land by facilities, but also provides information on the quantities of chemicals sent to other facilities for further management (USEPA, 2003b; USEPA, 2019c). Currently, for most chemicals, reporting of releases is required if 25,000 pounds or more of the chemical are manufactured or processed at a facility, or if 10,000 pounds or more are used at the facility. For certain chemicals the reporting threshold is as low as 0.1 grams, 10 pounds, or 100 pounds (40 CFR 372.28). Both the number and type of facilities required to report has increased over time. Information from the TRI was downloaded in 2017 (USEPA, 2017a).

Although TRI can provide a general idea of release trends, these trends should be interpreted with caution since the list of chemicals with reporting requirements has generally increased over time. In addition, only those facilities that meet specific criteria are required to report to the TRI program. Finally, data on releases cannot be used as a direct measure of public exposure to a chemical in drinking water (USEPA, 2019a).

(3) Pesticide Usage Estimates

For the regulatory determinations process, the Agency reviews various sources of information about pesticide usage. Pesticide use and manufacturing information is considered confidential business information (CBI) and therefore, accurate measures of production and use are not publicly available. As a result, the Agency reviews various estimates of use as supplemental information in the deliberative process.

For some pesticides, the EPA presents estimations of annual U.S. usage of individual pesticides in its pesticide reregistration documents (*e.g.,* REDs, IREDs, TREDs). The EPA also periodically issues Pesticides Industry Sales and Usage reports. The reports provide contemporary and historical information on U.S. pesticide production, imports, exports, usage, and sales, particularly with respect to dollar values and quantities of active ingredient (USEPA, 2004a; USEPA, 2011c; USEPA, 2017b).

The National Center for Food and Agricultural Policy (NCFAP), a private non-profit institution, has also produced national pesticide use estimates based on USDA state-level statistics and surveys for commercial agriculture usage patterns and state-level crop acreage. The database contains estimates of pounds applied and acres treated in each State for 220 active (pesticide) ingredients and 87 crops. The majority of the chemicals monitored are herbicides, but the database also follows significant numbers of fungicides and insecticides (NCFAP, 2000).

The USGS produced usage estimates and maps for over 200 pesticides used in United States crop production, providing spatial insight to the regional use of many pesticides (USGS, 2018). These pesticide use estimates were generated by the USGS using data from proprietary surveys of farm operations, USDA Census of Agriculture, and other

sources. USGS used two methods to estimate pesticide usage, since pesticide usage information was not available in some districts. ''EPest-High'' estimates were generated by projecting usage estimates for such districts based on usage in neighboring districts. ''EPest-Low'' estimates were generated by assuming no usage in such districts.

IV. Contaminant-Specific Discussions for the RD 4 Preliminary Determination

A. Summary of the Preliminary Regulatory Determination

Based on the EPA's evaluation of the three SDWA criteria (discussed in section II.B.1), the Agency is making preliminary determinations to regulate two contaminants and to not regulate six contaminants. For each of the eight contaminants discussed in this section of this document, Table 7 summarizes information about the health assessment, principle study, critical effects, and associated reference dose and/or cancer slope factor used to derive an HRL. Following Table 7, Table 8 summarizes the primary occurrence information used to make these preliminary regulatory determinations. Section IV.B of this document provides a more detailed summary of the information and the rationale used by the Agency to reach its preliminary decisions for these eight contaminants. For more information about the two Phase 3 contaminants that are not receiving a preliminary regulatory determination, see section V.

TABLE 7—HEALTH EFFECTS INFORMATION FOR CONTAMINANTS DISCUSSED IN SECTION IV OF THIS DOCUMENT

RD 4 contaminant	Health assessment	Principle study	Critical effect	RfD for noncancer effects, in mg/kg/day	Cancer slope factor, in (mg/kg/day) $^{-1}$	HRL, in µg/L
PFOS	EPA OW HESD, 2016.	Luebker et al. 2005a and 2005b.	decreased neonatal rat body weight	0.00002	n/a	0.07.
PFOA	EPA OW HESD, 2016.	Lau et al., 2006	reduced ossification in proximal phalanges and accelerated puberty in male pups, in mice.	0.00002	[20] 0.07	0.07.
1,1-Dichloroethane	EPA ORD PPRTV, 2006.	Muralidhara et al., 2001.	increased urinary enzyme markers for renal damage and central nervous system (CNS) depression in rats.	0.2	n/a	1,000.
Acetochlor	EPA OPP HHRA, 2018.	ICI, Inc. 1988	increased salivation, increased alanine aminotransferase (ALT), ornithine carbamyl transferase and triglyceride levels; decreased blood glucose; and histopathological changes in the kidneys, liver and testes of males, in beagle dogs.	0.02	n/a	100.
Methyl Bromide (Bromomethane).	EPA OPP HHRA, 2006.	Mertens, 1997	decreased body weight, decreased rate of body weight gain, and decreased food consumption in rats.	0.022	n/a	100.
Metolachlor	EPA OPP HHRA, 2018.	Page, 1981	decreased pup body weight in rats	0.26	n/a	300.
Nitrobenzene	EPA IRIS, 2009	NTP, 1983	changes in absolute and relative organ weights, splenic congestion, and increases in reticulocyte count and metHb concentration in rats.	0.002	n/a	10.
RDX	EPA IRIS, 2018	Crouse et al., 2006 (noncancer); Lish et al. 1984 (cancer).	convulsions in rats (noncancer); lung and liver tumors in mice (cancer).	0.004	0.08	30 (noncancer); 0.4 (cancer).

TABLE 8—OCCURRENCE FINDINGS FROM PRIMARY DATA SOURCES

RD 4 contaminant	HRL, µg/L	Primary database	PWSs with at least 1 detection > ½ HRL	Population served by PWSs with at least 1 detection > ½ HRL	PWSs with at least 1 detection > HRL	Population served by PWSs with at least 1 detection > HRL
PFOS	0.07	UCMR 3 AM	95/4,920 (1.93%)	10,427,193/241 M (4.32%)	46/4,920 (0.93%)	3,789,831/241 M (1.57%).
PFOA	0.07	UCMR 3 AM	53/4,920 (1.07%)	3,652,995/241 M (1.51%)	13/4,920 (0.26%)	490,480/241 M (0.20%).
1,1-Dichloroethane.	1,000	UCMR 3 AM	0/4,916 (0.00%)	0/241 M (0.00%)	0/4,916 (0.00%)	0/241 M (0.00%).
Acetochlor	100	UCMR 1 AM	0/3,869 (0.00%)—UCMR 1	0/226 M (0.00%)—UCMR 1.	0/3,869 (0.00%)—UCMR 1	0/226 M (0.00%)—UCMR 1.
		UCMR 2 SS	0/1,198 (0.00%)—UCMR 2	0/157 M (0.00%)—UCMR 2.	0/1,198 (0.00%)—UCMR 2	0/157 M (0.00%)—UCMR 2.
Methyl Bromide (Bromomethane).	100	UCMR 3 AM	0/4,916 (0.00%)	0/241 M (0.00%)	0/4,916 (0.00%)	0/241 M (0.00%).
Metolachlor	300	UCMR 2 SS	0/1,198 (0.00%)	0/157 M (0.00%)	0/1,198 (0.00%)	0/157 M (0.00%).
Nitrobenzene	10	UCMR 1 AM	2/3,861 (0.05%)	255,358/226 M (0.11%)	2/3,861 (0.05%)	255,358/226 M (0.11%).
RDX	30, 0.4	UCMR 2 AM	0/4,139 (0.00%) > 15 µg/L	0/229 M (0.00%) > 15 µg/L.	0/4,139 (0.00%) > 30 µg/L	0/229 M (0.00%) > 30 µg/L.

TABLE 8—OCCURRENCE FINDINGS FROM PRIMARY DATA SOURCES—Continued

RD 4 contaminant	HRL, µg/L	Primary database	PWSs with at least 1 detection > ½ HRL	Population served by PWSs with at least 1 detection > ½ HRL	PWSs with at least 1 detection > HRL	Population served by PWSs with at least 1 detection > HRL
			3/4,139 (0.07%) > 0.2 µg/L.	96,033/229 M (0.04%) > 0.2 µg/L.	3/4,139 (0.07%) > 0.4 µg/L.	96,033/229 M (0.04%) > 0.4 µg/L.

B.Contaminant Profiles

1. Perfluorooctane Sulfonate (PFOS) and Perfluorooctanoic Acid (PFOA)

a. Background

PFAS are a group of synthetic chemicals that have been in use since the 1940s. PFAS are found in a wide array of consumer and industrial products. PFAS manufacturing and processing facilities, facilities using PFAS in production of other products, airports, and military installations have been associated with PFAS releases into the air, soil, and water (USEPA, 2016e; USEPA, 2016f).

PFOS and PFOA—two of the most widely-studied and longest-used PFAS—are part of a subset of PFAS known as perfluorinated alkyl acids (PFAA). These two compounds have been detected in up to 98% of serum samples taken in biomonitoring studies that are representative of the U.S. general population; however, since PFOA and PFOS have been voluntarily phased out in the U.S., serum concentrations have been declining (CDC, 2019). The National Health and Nutrition Examination Survey (NHANES) data shows that 95th-percentile serum PFOS concentrations have decreased from 75.7 µg/L in the 1999–2000 cycle to 18.3 µg/L in the 2015–2016 cycle (CDC, 2019; Jain, 2018; Calafat et al., 2007; Calafat et al., 2019), a decrease of over 75 percent. In early 2000, the EPA worked with the 3M Company, which was the only major manufacturer of PFOS in the United States at that time, to support the company's voluntary phase-out and elimination of PFOS production and use. Under the EPA's 2010/2015 PFOA Stewardship Program, eight major chemical manufacturers and processors agreed to phase out the use of PFOA and PFOA-related chemicals in their products and emissions from their facilities. All companies met the PFOA Stewardship Program goals by 2015. While companies participating in the PFOA Stewardship program report that they no longer produce or use PFOA domestically, PFOA may still be produced domestically or imported or used by companies not participating in the PFOA Stewardship Program. In addition, PFOA and PFOS can also be present in imported articles (USEPA, 2017c). Due to the widespread use and persistence of PFAS in the environment, most people have been exposed to PFAS, including PFOA and PFOS (USEPA, 2016e; USEPA, 2016f).

Production of PFOA and PFOS is subject to CDR reporting. Production volumes of PFOA and PFOS were claimed by reporting companies as confidential for the most recent reporting cycles. The last time production (including import) of PFOA exceeded the CDR reporting threshold was during the 2016 reporting cycles (which includes production information from 2012–2015) and it was phased out by companies participating in the 2010/2015 PFOA Stewardship Program in 2013. Similarly, PFOS was phased out by 3M in 2002 and the most recently reported data for PFOS are from the 2002 reporting cycle (which includes production information from 2001 only) (USEPA, 2019a). Absence of recent reporting may indicate that production (including import) of PFOA and PFOS has halted or has been below the CDR reporting thresholds. Although PFOA and PFOS are not produced domestically or imported by the companies participating in the 2010/2015 PFOA Stewardship Program, PFOA and PFOS may still be produced domestically or imported below the CDR reporting thresholds (*i.e.,* 2,500 pounds) by companies not participating in the PFOA Stewardship Program.

b. Statutory Criterion #1 (Adverse Health Effects)

The EPA is preliminarily determining that PFOA and PFOS meet the SDWA statutory criterion #1 for regulatory determinations: They may have adverse effects on the health of persons. In 2016, the EPA published health assessments (health effects support documents or HESDs) for PFOA and PFOS based on the Agency's evaluation of the peer reviewed science available at that time. This section presents a summary of the adverse health effects discussed in the HESDs. For specific details on the potential for adverse health effects and approaches used to identify and evaluate information on hazard and dose-response, please see USEPA (2016d), USEPA (2016e), USEPA (2016f), and USEPA (2016g). The lifetime HA of 0.07 µg/L is used as the HRL for Regulatory Determination 4.

Human epidemiology data report associations between PFOA exposure and high cholesterol, increased liver enzymes, decreased vaccination response, thyroid disorders, pregnancy-induced hypertension and preeclampsia, and cancer (testicular and kidney). The associations for most epidemiology endpoints are mixed. Although mean serum values are presented in the human studies, actual estimates of PFOA exposure (*i.e.,* doses/duration) are not currently available. Thus, the serum level at which the effects were first manifest and whether the serum had achieved steady state at the point the effect occurred cannot be determined. It is likely that some of the human exposures that contribute to serum PFOA values come from PFOA derivatives or precursors that break down metabolically to PFOA. These compounds could originate from PFOA in diet and materials used in the home, which creates potential for confounding. In addition, most of the subjects of the epidemiology studies have many PFASs and/or other contaminants in their blood. Although the study designs adjust for other potential toxicants as confounding factors, their presence constitutes a level of uncertainty that is usually absent in the animal studies. Taken together, the weight of evidence for human studies supports the conclusion that PFOA exposure is a human health hazard. At this time, EPA concludes that the human studies are adequate for use qualitatively in the identification hazard and are supportive of the findings in laboratory animals.

[20] Using the CSF, the calculated concentration in drinking water with one-in-a-million risk for an increase in testicular tumors at levels greater than background is 0.0005 mg/L.

The equivalent concentration derived from the RfD is lower than the concentration of 0.0005 mg/L associated with a one-in-a-million risk for testicular cancer indicating that a guideline derived from the developmental endpoint will be protective for the cancer endpoint. (USEPA, 2016g).

For PFOA, oral animal studies of short-term, subchronic, and chronic duration are available in multiple species including monkeys, rats and mice. These animal studies report developmental effects (survival, body weight changes, reduced ossification, delays in eye opening, altered puberty, and retarded mammary gland development), liver toxicity (hypertrophy, necrosis, and effects on the metabolism and deposition of dietary lipids), kidney toxicity (weight), immune effects, and cancer (liver, testicular, and pancreatic) (USEPA, 2016e). Overall, the animal toxicity studies available for PFOA demonstrate that the developing fetus is particularly sensitive to PFOA-induced toxicity. Human epidemiology data report associations between PFOA exposure and high cholesterol, increased liver enzymes, decreased vaccination response, thyroid disorders, pregnancy-induced hypertension and preeclampsia, and cancer (testicular and kidney). Overall, the developmental toxicity studies in animals available for PFOA demonstrate that the developing rodent fetus and newborn rodent are sensitive to PFOA-induced toxicity.

PFOA is known to be transmitted to the fetus via cord blood and to the newborn, infant, and child via breast milk (USEPA, 2016f). Under the EPA's *Guidelines for Carcinogen Risk Assessment* (USEPA, 2005b), there is ''suggestive evidence of carcinogenic potential'' for PFOA. Similarly, the International Agency for Research on Cancer (IARC) classifies PFOA as ''possibly carcinogenic to humans'' (IARC, 2019a; IARC, 2019b).

The EPA calculated several candidate RfDs for PFOA in the 2016 HESD and selected the RfD of 0.00002 mg/kg/day based on reduced ossification in proximal phalanges and accelerated puberty in male pups following exposure during gestation and lactation in a developmental toxicity study in mice (Lau et al., 2006) for the derivation of a lifetime HA. The RfD for PFOA was calculated by applying uncertainty factors to account for interspecies variability (3), intraspecies differences (10), and use of a LOAEL (3). The Health Effects Support Document (USEPA, 2016h) describes these uncertainties in Section 4. Additionally, uncertainties and limitations (*i.e.,* human epidemiological data, immunological and mammary gland endpoints, and exposure) are discussed in detail in Section 8 of the Health Advisory (USEPA, 2016f) document. The lifetime HA of 0.07 µg/L was calculated using the 0.00002 mg/kg/day RfD for developmental effects, a DWI to BW ratio for the 90th percentile [21] for lactating women (0.054 L/kg/day) and a calculated 20% RSC (USEPA, 2016f). This RfD is protective of effects other than those occurring during development such as kidney and immune effects. Because of the potential for increased susceptibility during the time period of pregnancy and lactation observed in this study, the EPA used DWI and BW parameters for lactating women in the calculation of a lifetime HA for this target population during this potential critical time period. The EPA also calculated a CSF of 0.07 $(mg/kg/day)^{-1}$ based on testicular tumors in rats. The resultant HA using this CSF is greater than the lifetime HA based on noncancer effects, indicating that the HA derived based on the developmental endpoint is protective for the cancer endpoint (USEPA, 2016h).

For PFOS, epidemiological studies have reported associations between PFOS exposure and high serum cholesterol and reproductive and developmental parameters. The strongest associations are related to serum lipids with increased total serum cholesterol and high-density lipoproteins (HDLs). As with PFOA, the associations for most epidemiology endpoints are inconsistent. Although mean serum values are presented in the human studies, actual estimates of PFOS exposure (*i.e.,* doses/duration) are not currently available. Thus, the serum level at which the effects were first manifest and whether the serum had achieved steady state at the point the effect occurred cannot be determined (USEPA, 2016e) Human epidemiological studies suggest an association between higher PFOS levels and decreases in female fecundity and fertility, decreased birth weights in offspring and other measures of postnatal growth (*e.g.,* small for gestational age).

Short-term and chronic exposure studies in animals demonstrate increases in liver weight consistently. Co-occurring effects in these studies include decreased cholesterol, hepatic steatosis, lower body weight, and liver histopathology. One and two generation toxicity studies also show decreased pup survival and body weights. Additionally, developmental neurotoxicity studies show increased motor activity and decreased habituation and increased escape latency in the water maze test following in utero and lactational exposure to PFOS. Gestational and lactational exposures were also associated with higher serum glucose levels and evidence of insulin resistance in adult offspring. Limited evidence suggests immunological effects in mice. Short-term and subchronic duration studies are available in multiple animal species including monkeys, rats and mice. These studies also found increased serum glucose levels and insulin resistance in adult animals exposed during development, developmental effects (decreased body weight and survival), reproductive effects (impacts on mating behavior), liver toxicity (increased liver weight co-occurring with decreased serum cholesterol, hepatic steatosis), developmental neurotoxicity (impaired spatial learning and memory), suppressed immunological responses, and cancer (thyroid and liver). Increased incidence of hepatocellular adenomas in the male (12% at the high dose) and female rats (8% at the high dose) and combined adenomas/carcinomas in the females (10% at the high dose) were observed, but they did not display a clear dose-related response; Thyroid tumors (adenomas and carcinomas) were seen in males receiving 0, 0.5, 2, 5, or 20 ppm and in females receiving 5 or 20 ppm in their diet. The tumor (adenomas + carcinomas) prevalence for males was consistent across dose groups. In males the incidence of thyroid tumors was significantly elevated only in the high-dose, recovery group males exposed for 52 weeks (10/39) but not in the animals receiving the same dose at 105 weeks. There were very few follicular cell adenomas/carcinomas in the females (5 total) with no dose-response. The most frequent thyroid tumor type in the females was C-cell adenomas, but the highest incidence was that for the controls and there was a lack of dose response among the exposed groups. C-cell adenomas were not observed in males (Thomford 2002; Butenhoff et al. 2012). Overall, the animal toxicity studies available for PFOS demonstrate that the developing fetus and newborn rodent are sensitive to PFOS induced toxicity. PFOS is known to be transmitted to the fetus via cord blood and to the newborn, infant, and child via breast milk (USEPA, 2016f). Applying the EPA *Guidelines for Carcinogen Risk Assessment* (USEPA, 2005b), there is suggestive evidence of carcinogenic potential for PFOS. However, the weight of evidence for humans is too limited to support a quantitative cancer assessment given that there was no evidence for dose-response from which to derive a slope factor for the tumor types identified in animals.

[21] Consumers only estimate of combined direct and indirect community water ingestion; see Table 3–81 in USEPA, 2011b.

The EPA calculated multiple candidate RfDs for PFOS in the HESD and selected the RfD of 0.00002 mg/kg/day based on decreased neonatal rat body weight from both the one- and two-generation studies by Luebker et al. (2005a, 2005b) for the derivation of a lifetime HA. The RfD for PFOS was calculated by applying uncertainty factors to account for interspecies variability (3) and intraspecies differences (10). The Health Effects Support Document (USEPA, 2016g) describes these uncertainties in Section 4. Additionally, uncertainties and limitations (*i.e.,* human epidemiologic data, immunological and mammary gland endpoints, and exposure) are discussed in detail in Section 8 of the Health Advisory (USEPA, 2016e) document. The lifetime HA of 0.07 µg/L was calculated using the 0.00002 mg/kg/day RfD for developmental effects, a DWI to BW ratio for the 90th percentile [21] for lactating women (0.054 L/kg/day) and a 20% RSC (USEPA, 2016e). The lifetime HA of 0.07 µg/L is used as the HRL for Regulatory Determination 4.

The RfDs for both PFOA and PFOS are both based on developmental effects and are numerically identical. Thus, when both chemicals co-occur at the same time and location, the EPA recommended a conservative and health-protective approach of 0.07 µg/L for the PFOA/PFOS total combined concentration (USEPA, 2016e).

The EPA has initiated a systematic literature review of peer-reviewed scientific literature for PFOA and PFOS published since 2013 with the goal of identifying any new studies that may be relevant to human health assessment. An annotated bibliography of identified studies as well as the protocol used to identify the relevant publications can be found in Appendix D of the *Regulatory Determination 4 Support Document* (USEPA, 2019a), available in the docket for this document. Additional analyses of these new studies is needed to confirm relevance, extract the data to assess the weight of evidence, and identify critical studies in order to inform future decision making. The EPA is seeking comment on any additional studies and information that it should consider. Should the EPA make a final positive regulatory determination for PFOA and PFOS, the Agency will undertake the SDWA rulemaking process to establish a National Primary Drinking Water Regulation for those contaminants. For that rulemaking effort, in addition to using the best available science, the SDWA requires that the Agency seek recommendations from the EPA Science Advisory Board, and consider public comment on any proposed rule. Therefore, EPA anticipates further scientific review of new science prior to promulgation of any regulatory standard.

c. Statutory Criterion #2 (Occurrence at Frequency and Levels of Public Health Concern)

The EPA is preliminarily determining that PFOA and PFOS meet the SDWA statutory criterion #2 for regulatory determinations: they occur with a frequency and at levels of public health concern at PWSs based on the EPA's evaluation of the available occurrence information. The EPA is seeking public comment on whether the data described below support such a determination and whether additional data or studies exist which EPA should consider when finalizing a determination.

EPA has made its preliminary determination based, in part, on the UCMR 3 data (USEPA, 2019b). The EPA has determined in accordance with SDWA 1412(b)(1)(B)(ii)(II) that the UCMR 3 data are the best available occurrence information for the PFOA/PFOS regulatory determinations. UCMR 3 monitoring occurred between 2013 and 2015and currently represents the only nationally-representative finished water dataset for PFOA and PFOS. Under UCMR 3, 36,972 samples from 4,920 PWSs were analyzed for PFOA and PFOS. The MRL for PFOA was 0.02 µg/L and the MRL for PFOS was 0.04 µg/L. A total of 1.37% of samples had reported detections (greater than or equal to the MRL) of at least one of the two compounds. To examine the occurrence of PFOS and PFOA in aggregate, the EPA summed the concentrations detected in the same sample to calculate a total PFOS/PFOA concentration.

The EPA notes that when these two chemicals co-occur at the same time and location in a drinking water source, a conservative and health-protective approach that EPA recommends would be to compare the sum of the concentrations (USEPA, 2016g; USEPA, 2016h). The Regulatory Determination 4 Support Document presents a sample-level summary of the results for the individual contaminants (USEPA, 2019a). Concentrations of PFOS or PFOA below their respective MRLs were set equal to 0 µg/L when calculating the total PFOS/PFOA concentration for the sample. The maximum summed concentration of PFOA and PFOS was 7.22 µg/L and the median summed value was 0.05 µg/L. Summed PFOA and PFOS concentrations exceeded the HRL (0.07 µg/L) at a minimum of 1.3% of PWSs (63 PWSs [22]). Since UCMR 3 monitoring occurred, certain sites where elevated levels of PFOA and PFOS were detected may have installed treatment for PFOA and PFOS, may have chosen to blend water from multiple sources, or may have otherwise remediated known sources of contamination. Those 63 PWSs serve a total population of approximately 5.6 million people and are located in 25 states, tribes, or U.S. territories (USEPA, 2019b). The HRLs for PFOA and PFOS are based on the 2016 drinking water Health Advisories and reflect concentrations of PFOA and PFOS in drinking water at which adverse health effects are not anticipated to occur over a lifetime (USEPA, 2016e; USEPA, 2016f).

Consistent with the Agency's commitment in the PFAS Action Plan (USEPA, 2019d) to present information about additional sampling for PFAS in water systems, the EPA has supplemented its UCMR data with data collected by states who have made their data publicly available at this time. In some cases, EPA obtained the data directly from the state's public website while, in others, these data were provided to EPA. Specifically, the EPA evaluated publicly available monitoring data that permitted summed PFOA and PFOS analyses from the state websites of New Hampshire, Colorado, and Michigan. Additional finished drinking water monitoring data was provided to the EPA by the New Jersey Department of Environmental Protection. These data are summarized in Table 9 below. The EPA notes that some of these data are from targeted sampling efforts and thus may not be representative of occurrence in the state. The EPA also notes that states which chose to make their occurrence data publicly available and the state that chose to provide its data to the EPA may not necessarily represent occurrence in other states. The Regulatory Determination 4 Support Document presents a detailed discussion of additional information from states on occurrence of these contaminants in drinking water systems (USEPA, 2019a). The EPA is also aware that some of these states may have updated data available and that additional states have or intend to conduct monitoring of finished drinking water, such as Illinois, Pennsylvania, and Vermont. The EPA will consider any data submitted in response to this proposal to inform future regulatory decision making. The EPA is also aware of additional locations with drinking

[22] Sum of PFOA + PFOS results rounded to 2 decimal places in those cases where a laboratory reported more digits.

water impacts (including private wells) from contaminated sites. These include sites near production facilities, active and former military bases, and other point sources.[23]

For the following summed PFOA and PFOS analyses, monitoring data sets from public water systems in New Hampshire and New Jersey permitted combined analysis of PFOS and PFOA occurrence (*i.e.,* with paired PFOS and PFOA concentrations reported for each individual water sample). In addition, Colorado and Michigan directly reported monitoring results for combined PFOS and PFOA. All states data sets summarized in Table 9 had at least one instance of summed PFOS and PFOA concentrations greater than the HRL of 0.07 μg/L. Additional details can be found in the *Regulatory Determination 4 Support Document* (USEPA, 2019a).

TABLE 9—COMBINED PFOS AND PFOA OCCURRENCE: SUMMARY OF STATE MONITORING RESULTS[24]

State (reference)	Date range	Type of water tested	Notes on coverage	Summary of results	Survey type
Colorado (CDPHE, 2018)	2013–2017.	Surface Water (Finished Water) and Drinking Water Distribution Samples.	Data available from 28 "drinking water distribution zones" (one or more per public water system) in targeted sampling efforts at a known contaminated aquifer region. Data were collected by El Paso County Public Health, local water districts and utilities, and the Colorado Department of Public Health and Environment (CDPHE). Results represent data collected in a targeted region. Detection limits ranged from 0.002 μg/L to 0.040 μg/L.	The maximum summed concentration of PFOA and PFOS was 0.3 μg/L and the median summed value was 0.09 μg/L. Summed PFOA and PFOS concentrations exceeded the EPA HRL (0.07 μg/L) at 25% of distribution zones (7 distribution zones).	Targeted.
Michigan (Michigan EGLE, 2019)	2018–2019.	Groundwater and Surface Water—Raw and Finished Water (Community Water Supplies).	Data available from 1,119 public community water systems, downloaded in October 2019. Results are from the Michigan Department of Environment, Great Lakes and Energy (EGLE) statewide sampling efforts for PFAS of drinking water from community water supplies. Results are presented for the sum of PFOA and PFOS concentrations. Information on detection limits was not available.	The maximum summed concentration of PFOA and PFOS was 1.52 μg/L and the median summed value was 0.004 μg/L. Summed PFOA and PFOS concentrations exceeded the EPA HRL (0.07 μg/L) at 0.09% of PWSs (1 PWS).	Statewide.
New Hampshire (NHDES, 2017)	2013–2017.	Groundwater and Surface Water.	Data available online from 295 PWSs providing results to NH, including PWSs near contaminated sites. Results represent all PFOA and PFOS water quality data reported to New Hampshire Department of Environmental Services (NHDES) through May 3, 2017. There is no discussion of representativeness. Detection limits ranged from 0.0005 μg/L to 0.04 μg/L.	The maximum summed concentration of PFOA and PFOS was 0.242 μg/L and the median summed value was 0.006 μg/L. Summed PFOA and PFOS concentrations exceeded the EPA HRL (0.07 μg/L) at 1.01% of PWSs (3 PWSs).	Targeted.
New Jersey (NJDEP, 2019)	2019 ...	Groundwater and Surface Water—Finished Water.	Statewide sampling of finished drinking water data between January 1, 2019 and June 28, 2019. These represent the first two quarters of statewide efforts to sample of finished drinking water. Under this sampling effort, 2,459 water samples from 1,049 PWS were analyzed for PFOA and PFOS. Detection limits ranged from 0.0016 - 0.0046 (doesn't specify for which PFAS compound).	The maximum summed concentration of PFOA and PFOS was 1.09 μg/L and the median summed value was 0.01 μg/L. Summed PFOA and PFOS concentrations exceeded the EPA HRL (0.07 μg/L) at 1.14% of PWSs (12 PWSs).	Statewide.

In addition to the monitoring data available from public water systems, North Carolina has made data from 17 private wells associated with the Chemours facility in Fayetteville available (NCDEQ, 2018). The maximum combined PFOS and PFOA concentration was 0.0319 μg/L, while the median was 0.004 μg/L. Summed PFOS and PFOA concentrations did not exceed the EPA HRL (0.07 μg/L) at any of the sampling sites. Note that the EPA does not regulate private drinking water wells but may evaluate data from private wells where the data may be indicative of contaminants in aquifers that are used as sources for public water system wells.

UCMR 3 data have also been used by researchers to evaluate co-occurrence of PFAS in drinking water at PWSs. For example, Guelfo and Adamson (2018) investigated PFAS data from UCMR 3 for occurrence and co-contaminant mixtures, trends in PFAS detections relative to PWS characteristics and potential release types, and temporal trends in PFAS occurrence. The study identified that approximately 50% of samples with PFAS detections contained ≥2 PFASs, and 72% of detections occurred in groundwater. Large PWSs (>10,000 customers) were 5.6 times more likely than small PWSs (≤10,000 customers) to exhibit PFAS detections; however, when detected, median total PFAS concentrations were higher in small PWSs (0.12 μg/L) than in large (0.053 μg/L). Hu et al. (2016) presented spatial analysis of PFAS concentrations under UCMR 3 and found that the number of industrial sites

[23] Examples include Chemours Washington Works Facility, West Virginia (production facilities), Horsham Air National Guard Station, Pennsylvania and former Wurtsmith Air Force Base, Michigan (active and former military bases), and non-military firefighting activities (other point sources).

[24] Some of these data in these tables are from targeted sampling efforts and therefore, would be expected to have higher detection rates than a random sample.

that manufacture or use these compounds, the number of military fire training areas, and the number of wastewater treatment plants are all significant predictors of PFAS detection frequencies and concentrations in public water supplies. The authors found that for PFAS monitored under UCMR 3, the detection frequency in drinking water sourced from groundwater was more than twice that from surface water. Additionally, PFOA and PFOS were more frequently detected in groundwater whereas UCMR 3 PFAS compounds with shorter chain lengths were detected more frequently in surface waters. Hu et al. (2016) noted that this observation could be due to the original mode of environmental release (aerosol, application to soil, and aqueous discharge).

The state data (as presented above and discussed in the Regulatory Determination 4 Support Document), while some are from targeted sampling efforts and therefore, would be expected to have higher detection rates than a random sample, show occurrence in multiple geographic locations consistent with what was observed during UCMR 3 monitoring. Additionally, some state monitoring efforts show detections above the EPA Health Advisory in water systems that were not required to conduct monitoring in the UCMR 3. EPA believes that these data support the Agency's preliminary determination that PFOA and PFOS occur with a frequency and at levels of public health concern in drinking water systems across the United States. Additional details of the EPA analyses of UCMR 3 monitoring data for PFAS can be found in the *Regulatory Determination 4 Support Document* (USEPA, 2019a). The EPA requests comment on whether there are additional occurrence data sets that it can use to supplement the analyses already performed and inform its determination, including more recent data from specific data sets mentioned above.

d. Statutory Criterion #3 (Meaningful Opportunity)

The EPA conducted extensive public outreach in the development of the PFAS Action Plan, including gathering diverse perspectives through the May 2018 National Leadership Summit, direct engagement with the public in impacted communities in five states, engagement with tribal partners, and roundtables conducted with community leaders near impacted sites. In addition, the Agency reviewed approximately 120,000 comments in the public docket that was specifically established to gather input for the Action Plan (USEPA, 2019d). Through these engagements, the EPA heard significant concerns from the public on the challenges these contaminants pose for communities nationwide and the need for uniform, protective drinking water regulations across the United States.

Based on the significant public interest in the potential risks posed by PFOA and PFOS, and the information currently available to the EPA, the Administrator has made the preliminary determination that regulation of PFOA and PFOS presents a meaningful opportunity for health risk reduction for persons served by PWSs. In determining that regulation of PFOA and PFOS presents a meaningful opportunity for health risk reduction for sensitive populations, the EPA was particularly mindful that PFOA and PFOS are known to be transmitted to the fetus via cord blood and to the newborn, infant, and child via breast milk (USEPA, 2016f).

Data from recent state monitoring efforts validate the UCMR 3 monitoring results (USEPA, 2019b; NJ DEP, 2019). Sun et al. observed similar temporal trends in their investigation in the Cape Fear Watershed of North Carolina, where PFAS concentrations remained similar between 2006 and 2013 (Sun et al., 2016). These observations suggest that PFOA and PFOS can be persistent in the environment, lack attenuation processes that would degrade these compounds over time and may be subject to precursor transformations. The EPA believes PFOA and PFOS occur at a frequency and at levels of public health concern. UCMR 3 indicates 1.3% of PWSs (63 PWSs) monitored reported combined PFOA/PFOS above the HRL. These systems serve a total population of approximately 5.6 million people. While this preliminary regulatory determination is based, in part, on the UCMR occurrence data, it is also based on additional factors discussed above.

State data (as described above and discussed in the Regulatory Determination 4 Support Document) support the UCMR results, and the Agency's determination that PFOA and PFOS occur with a frequency and at levels of public health concern in finished drinking water across the United States, with some results substantially elevated above the EPA's HAs. These data have also identified PFAS contamination in other locations, such as in small, previously unmonitored systems, beyond where the UCMR 3 required water systems to conduct monitoring. Due to the anthropogenic nature of PFOA and PFOS and their persistence in the environment, multiple localized areas of contamination across the country may be a significant contributor to drinking water contamination. The state data sets summarized in Table 9 had at least one instance of summed PFOS and PFOA concentrations greater than the HRL of 0.07 μg/L. While many detections are marginally above the EPA HA levels, there are many instances where localized samples substantially exceed the HA levels, sometimes by 2–3 orders of magnitude (*i.e.,* a maximum summed concentration as high as 1.52 μg/L). The EPA believes there is significant public health risk reduction potential in the localized areas with these significantly elevated concentrations. To assess communities with the highest exposures, the ATSDR has begun to perform PFAS exposure assessments in communities near current or former military bases with elevated concentrations of PFAS detected in drinking water (ATSDR, 2019a).

Adverse effects observed following exposures to PFOA and PFOS are the same or similar and include effects in humans on serum lipids, birth weight, and serum antibodies. Some of the animal studies show common effects on the liver, neonate development, and responses to immunological challenges. Both compounds were also associated with tumors in long-term animal studies (USEPA, 2016g; USEPA, 2016h). States have taken action to reduce exposures (as further discussed below). Some states have established regulatory or guidance levels in drinking water for PFOA, PFOS, as well as other PFAS (ASDWA, 2019). Moving forward with a national-level regulation for PFOA and PFOS may provide additional national consistency and reduce regulatory uncertainty for stakeholders across the country.

PFOA and PFOS are resistant to environmental degradation processes such as hydrolysis, photolysis, and biodegradation and are thus highly persistent in the environment (USEPA, 2019a). In addition, biotic and abiotic processes can degrade PFAS precursors to form PFAAs such as PFOA and PFOS over time and thus are also important contributors to the presence and persistence of these chemicals in the environment (ITRC, 2018). Additionally, PFOA and PFOS are expected to have a high likelihood of partitioning to water based on their ionic nature at typical environmental pH and their organic carbon partitioning coefficients (K_{oc}). PFOA has a high likelihood of partitioning to water based on its water solubility while the water solubility of PFOS anion indicates a moderate likelihood of partitioning to water.

Therefore, PFOA and PFOS have high mobility and persistence in soil and groundwater and are expected to form larger plumes than less mobile and persistent contaminants in the same hydrogeological setting (ITRC, 2018). In addition, long-range atmospheric transport of PFOA and PFOS through industrial releases (*e.g.,* stack emissions) can accumulate to measurable levels in soils and surface waters away from their point of release (Young et al., 2007; Wallington et al., 2006; Dreyer et al., 2010). Although some manufacturing companies agreed to phase out production of PFOA and PFOS in the United States, other sources could still exist such as fire training and emergency response sites, industrial sites, landfills, and wastewater treatment plant biosolids as well as imported in products (USEPA, 2017c; ITRC, 2018). Drinking water analytical methods are available to measure PFOA, PFOS, and other PFAS in drinking water. The EPA has published validated methodology for detecting a total of 29 unique PFAS in drinking water including EPA Method 537.1 (18 PFAS) (USEPA, 2018b) and EPA Method 533 (25 PFAS) (14 PFAS can be detected by both methods). Therefore, new information about the occurrence of PFAS in drinking water will become available as the Agency further evaluates regulatory action for these contaminants.

Available treatment technologies for removing PFAS from drinking water have been evaluated and reported in the literature (*e.g.,* Dickenson and Higgins, 2016). The EPA's Drinking Water Treatability Database (USEPA, 2019e) summarizes available technical literature on the efficacy of treatment technologies for a range of priority drinking water contaminants, including PFOA and PFOS. Conventional treatment (comprised of the unit processes coagulation, flocculation, clarification, and filtration) is not considered effective for the removal of PFOA. Granular activated carbon (GAC), anion exchange resins, reverse osmosis and nanofiltration are considered effective for the removal of PFOA. However, there are limitations and uncertainties pertaining to these removal processes for PFAS. For example, the treatment efficacy of GAC and anion exchange resins is strongly dependent upon the type of PFAS present and physio-chemical properties of the solution matrix. When mixed PFAS are in the source water, short-chain PFAS will break through the adsorber more quickly. When a system makes treatment technology decisions, it is important to consider the media reactivation and replacement frequency, the cost of reactivation or disposal of spent media, and the potential for overshoot (*i.e.,* higher concentrations of a contaminant in the effluent than the influent, due to preferential adsorption of other contaminants) if a treatment system is operated improperly (Crone et al., 2019; Speth, 2019). Reverse osmosis and nanofiltration are effective for removing a wide range of PFAS. However, they have high capital and operations costs (Crone et al., 2019; Speth, 2019). Additionally, membrane fouling, corrosion control, and the disposal or treatment of concentrate stream are issues that need to be addressed (Crone et al., 2019; Speth, 2019). Additional literature and discussion on the efficacy of these treatments can be found on the EPA's Drinking Water Treatability Database (USEPA, 2019e).

Considering the population exposed to PFOA and PFOS including sensitive populations and lifestages, such as children, the potential adverse human health impacts of these contaminants at low concentrations, the environmental persistence, the persistence in the human body, the availability of both methods to measure and treatment technologies to remove these contaminants, and significant public concerns regarding PFOA and PFOS contamination, the Agency proposes the finding that regulation of PFOA and PFOS presents a meaningful opportunity for health risk reduction for infants, children, and adults, including pregnant and nursing women, served by PWS. While SDWA specifies that the determination of whether PFOA and PFOS present ''a meaningful opportunity for health risk reduction for persons served by public water systems'' is made ''in the sole judgement of the Administrator,'' the EPA seeks public comment on the information and analyses described above.

e. Preliminary Regulatory Determination for PFOA and PFOS

At this stage, the Agency is making a preliminary determination to regulate PFOA and PFOS with an NPDWR after evaluating health, occurrence, and other related information against the three SDWA statutory criteria. The EPA has preliminarily determined that PFOA and PFOS may have an adverse effect on human health; that PFOA and PFOS occur in PWSs with a frequency and at levels of public health concern; and that regulation of PFOA and PFOS presents a meaningful opportunity for health risk reduction for persons served by PWSs. The *Regulatory Determination 4 Support Document* (USEPA, 2019a) and the *Occurrence Data from the Third Unregulated Contaminant Monitoring Rule (UCMR 3)* (USEPA, 2019b) present additional information and analyses supporting the Agency's evaluation of PFOA and PFOS.

The agency solicits comment on all aspects of this preliminary regulatory determination. In particular, the EPA requests comment on whether there are any additional data the agency should consider in making its final regulatory determination and whether EPA has appropriately considered the data.

f. Considerations for Additional PFAS

As stated in the EPA's PFAS Action Plan (USEPA, 2019d): ''The Agency recognizes that there is additional information that the EPA should evaluate regarding PFAS other than PFOA and PFOS, including new monitoring and occurrence data, recent health effects data, and additional information to be solicited from the public, which will inform the development of a national drinking water regulation for a broader class of PFAS in the future.''

The EPA is aware that many states, tribes, and local communities face challenges from PFAS other than PFOA and PFOS. For example, in addition to PFOA and PFOS, the EPA worked with states and public water systems to characterize the occurrence of four additional PFAS (perfluorononanoic acid (PFNA), perfluorohexanesulfonic acid (PFHxS), perfluoroheptanoic acid (PFHpA), and PFBS)) in the nation's drinking water served by public water systems under UCMR 3. The EPA found that 4.0% of PWSs reported results for which one or more of the six UCMR 3 PFAS were measured at or above their respective MRL. The 4.0% figure is based on 198 PWSs reporting measurable PFAS results for one or more sampling events from one or more of their sampling locations. Those 198 PWS serve an estimated total population of approximately 16 million.

With the voluntary phase-out of PFOA and PFOS, manufacturers are shifting to alternative PFAS compounds (*e.g.,* hexafluoropropylene oxide (HFPO) dimer acid and HFPO dimer acid ammonium salt (GenX chemicals), and perfluorobutanesulfonic acid (PFBS)). There is less publicly available information on the occurrence and health effects of these replacements than for PFOA and PFOS and other members of the carboxylic acid and sulfonate PFAS families (Brendel et al., 2018).

The EPA plans to consider available human health toxicity and occurrence

information for other PFAS as they become available. The EPA is working on hazard assessments for the following PFAS: GenX chemicals; PFBS; PFNA; perfluorobutanoic acid (PFBA); perfluorodecanoic acid (PFDA); perfluorohexanoic acid (PFHxA); and PFHxS.

The following PFAS have literature available in the EPA's Health and Environmental Research Online (HERO), which is a database of scientific studies and other references used to develop the EPA's risk assessments aimed at understanding the health and environmental effects of pollutants and chemicals. While HERO uses a variety of reference types, the majority are original research published in peer-reviewed literature. For some PFAS, there are epidemiological and/or experimental animal toxicity data available, which may be suitable to inform the evaluation of potential human health effects. Other references provide information on occurrence (both in humans and the environment). Available references for the PFAS listed below can be accessed at: *https://hero.epa.gov/hero/index.cfm/litbrowser/public/#PFAS.*

Chemical name	Acronym	CAS No.
Perfluorooctanoic acid	PFOA	335–67–1
Perfluorooctanesulfonic acid	PFOS	1763–23–1
2H,2H,3H,3H-Perfluorooctanoic acid	5:3 acid	914637–49–3
6:2/8:2 Fluorotelomer phosphate diester	6:2/8:2 diPAP	943913–15–3
Bis[2-(perfluorohexyl)ethyl] phosphate	6:2 diPAP	57677–95–9
Mono[2-(perfluorohexyl)ethyl] phosphate	6:2 monoPAP	57678–01–0
Bis[2-(perfluorooctyl)ethyl] phosphate	8:2 diPAP	678–41–1
Mono[2-(perfluorooctyl)ethyl] phosphate	8:2 monoPAP	57678–03–2
4,8-dioxa-3H-perfluorononanoic acid	ADONA	919005–14–4
6:2 Fluorotelomer alcohol	FtOH 6:2	647–42–7
8:2 Fluorotelomer alcohol	FtOH 8:2	678–39–7
6:2 Fluorotelomer sulfonic acid	FtS 6:2	27619–97–2
8:2 Fluorotelomer sulfonic acid	FtS 8:2	39108–34–4
HFPO dimer acid	GenX chemicals	13252–13–6
HFPO dimer acid ammonium salt	GenX chemicals	62037–80–3
2-(N-Ethylperfluorooctanesulfonamido) acetic acid	NEtFOSAA	2991–50–6
2-(N-Methylperfluorooctanesulfonamido) acetic acid	NMeFOSAA	2355–31–9
Perfluorobutanoic acid	PFBA	375–22–4
Perfluorobutanesulfonic acid	PFBS	375–73–5
Perfluorodecanoic acid	PFDA	335–76–2
Perfluorododecanoic acid	PFDoA	307–55–1
Perfluorodecanesulfonic acid	PFDS	335–77–3
Perfluoroheptanoic acid	PFHpA	375–85–9
Perfluoroheptanesulfonic acid	PFHpS	375–92–8
Perfluorohexanoic acid	PFHxA	307–24–4
Perfluorohexanesulfonic acid	PFHxS	355–46–4
Perfluorononanoic acid	PFNA	375–95–1
Perfluorononanesulfonic acid	PFNS	68259–12–1
Perfluorooctanesulfonamide	PFOSA	754–91–6
Perfluoropentanoic acid	PFPeA	2706–90–3
Perfluoropentanesulfonic acid	PFPeS	2706–91–4
Perfluorotetradecanoic acid	PFTeDA	376–06–7
Perfluoroundecanoic acid	PFUnA	2058–94–8

The EPA continues to work towards filling information gaps for human health, toxicity and occurrence including through collaborations with federal, state, tribal, and other stakeholders. The EPA is generating PFAS toxicology data through new approaches such as high throughput screening, computational toxicology tools, and chemical informatics for chemical prioritization, screening, and risk assessment. This research can inform a more complete understanding of PFAS toxicity for the large set of PFAS chemicals without conventional toxicity data and allow prioritization of actions to potentially address groups of PFAS. For additional information on the new approach methods for PFAS toxicity testing, please visit: *https://www.epa.gov/chemical-research/pfas-chemical-lists-and-tiered-testing-methods-descriptions.* To further understand occurrence in drinking water and discussed in the EPA's PFAS Action Plan (USEPA, 2019d), the EPA will propose a nationwide drinking water monitoring for PFAS under the next UCMR monitoring cycle (UCMR 5) utilizing newer methods available to detect more PFAS chemicals and at lower MRLs than previous possible for the earlier UCMR monitoring. These monitoring results will improve understanding of the frequency and concentration of PFAS occurrence in the finished U.S. drinking water.

The EPA is also aware of ongoing toxicity work and guideline development by other federal agencies, state governments, international organizations, industry groups, and other stakeholders. For example, the U.S. National Toxicology Program is conducting ongoing toxicological studies for multiple PFAS compounds of varying length in rats, including 28-day studies for 7 PFAS compounds (3 carboxylates and 4 sulfonates), and a 2-year chronic toxicity and carcinogenicity study for PFOA that is currently undergoing peer-review. ATSDR developed a draft toxicological profile that characterizes toxicologic and adverse health effects information for PFOA, PFOS, and 10 other PFAS compounds which include PFBA, PFHxA, PFHpA, PFNA, PFDA, PFUnA, PFDoA, PFBS, PFHxS, and PFOSA (ATSDR, 2018). Some states, including California, Michigan, Minnesota, New Hampshire, New Jersey, New York and Vermont, are also developing health-based guidance or drinking water standards for individual targeted PFAS or the sum for several targeted PFAS

(California OEHHA, 2019; Commonwealth of Massachusetts, 2019; MDH, 2019; Michigan Science Advisory Workgroup, 2019; NHDES, 2019; NJDOH, 2017; NYSDOH, 2018; VTDEC, 2019). PFAS that have been or are being evaluated by at least one state include Hexafluoropropylene Oxide (HFPO) Dimer Acid and its Ammonium Salt (GenX chemicals), PFBA, PFBS, PFHpA, PFHxA, PFHxS, PFNA, PFOA, and PFOS. The EPA will evaluate all available and reliable information to inform future decision making for these PFAS contaminants. The EPA is also aware of PFAS monitoring efforts by states and local communities to better understand PFAS occurrence in drinking water, including both statewide drinking water monitoring efforts and targeted sampling at locations that have potentially been impacted by releases or locations where PFAS-containing materials are known to have been used (Table 9). The EPA will consider these other information sources to inform future decisions for other PFAS.

g. Potential Regulatory Approaches

Since PFOA and PFOS raise complicated issues and since the issuance of any NPDWR imposes costs on the public, the EPA is taking advantage of this document by exploring and seeking comment on potential regulatory constructs and monitoring requirements the Agency may consider for PFAS chemicals including PFOA and PFOS if it were to finalize positive regulatory determinations. As noted above in the EPA PFAS Action Plan (USEPA, 2019d), the EPA is seeking information from the public to ''inform the development of national drinking water regulation for a broader class of PFAS in the future''. The EPA is seeking feedback on potential regulatory approaches to address PFAS to support the potential development of a PFOA and PFOS regulation (pending final regulatory determinations) or in future PFAS regulatory actions. The EPA is exploring how to best use the available information when developing potential regulatory approaches for PFAS. Three potential regulatory approach options described below include (1) evaluate each additional PFAS on an individual basis; (2) evaluate additional PFAS by different grouping approaches; and (3) evaluate PFAS based on drinking water treatment techniques.

Evaluate Each Additional PFAS on an Individual Basis

This approach would focus on evaluating PFAS individually for potential future regulatory actions using information completed prior to a potential rule proposal. Examples of suitable information sources the EPA could evaluate under future actions include current and expected peer reviewed toxicity assessments, nationwide drinking water monitoring data, state drinking water monitoring data, and monitoring data from other Federal Agencies. This approach would be limited to those individual PFAS for which sufficient health and occurrence information is available or can be clearly and logically extrapolated. The EPA is actively working to fill information gaps needed to support this approach including developing toxicity assessments for PFBS, HFPO dimer acid and HFPO dimer acid ammonium salt or GenX chemicals, PFBA, PFHxA, PFNA, and PFHxS, and PFDA. The EPA plans to propose nationwide drinking water monitoring for PFAS under the next UCMR monitoring cycle (UCMR 5) utilizing newer methods available to measure more PFAS and at lower minimum reporting levels than previous UCMR monitoring. The EPA may also consider health assessments and occurrence data that are currently being developed by other federal, state and international agencies.

Evaluate Additional PFAS by Different Grouping Approaches

Since the 1940s, over 4000 PFAS have been manufactured and used in a variety of industries across the world (Guelfo et al., 2018; OECD 2019). Evaluations of the retrospective reporting requirements of the TSCA Inventory Notification Rule indicates 602 PFAS are currently commercially active in the United States. The EPA recognizes the challenges associated with evaluating each PFAS that may impact drinking water on an individual basis. The EPA has regulated contaminants as a group in drinking water, including, for example, disinfection byproducts (*i.e.,* haloacetic acids and total trihalomethanes).

In their study of organohalogen flame retardants, the National Academies of Sciences evaluated general approaches to forming chemical classes at regulatory agencies and concluded that a ''science-based class approach does not necessarily require one to evaluate a large chemical group as a single entity for hazard assessment. That is, an approach that divides a large group into smaller units (or subclasses) to conduct the hazard assessment is still a class approach for purposes of hazard or risk assessment'' (NASEM, 2019). An approach to exploring PFAS by groups could, for example, include evaluating groups of PFAS to account for similar physiochemical characteristics. The EPA's ORD and the National Institute of Environmental Health Sciences' (NIEHS) National Toxicology Program recently identified a subset of PFAS for testing with the goals of supporting read-across within structure-based subgroups and capturing the diversity of the broader PFAS class (Helman et al., 2019; Patlewicz et al., 2019a, 2019b). The EPA is also exploring new approaches such as high throughput and computational approaches to explore different chemical categories of PFAS. The EPA will continue research on methods for using these data to support risk assessments using new approach methods such as read-across (*i.e.,* an effort to predict biological activity based on similarity in chemical structure) and transcriptomics (*i.e.,* a measure of changes in gene expression in response to chemical exposure or other external stressors), and to make inferences about the toxicity of PFAS mixtures that commonly occur in real world exposures. Example classifications that the EPA could consider in its group evaluation include common adverse effects, chain length (*e.g.,* long chain and short chain), functional groups (*e.g.,* sulfonates, acids), degradation products (*i.e.,* some PFAS degrade to shorter chain PFAS), co-occurrence, or using a combination of physiochemical and fate characteristics (*e.g.,* long chain perfluoroalkyl sulfonic acids).

Evaluate PFAS Based on Drinking Water Treatment Techniques

SDWA 1412(b)(7)(A) authorizes the EPA to promulgate a treatment technique rule rather than an MCL if the Agency determines it is not economically or technologically feasible to ascertain the level of the contaminant. The EPA continues to develop reliable analytical methods to monitor for PFAS including evaluating methodologies to measure total PFAS. However, the EPA does not anticipate that reliable and validated methods that accurately and precisely capture all PFAS or total PFAS (and not other fluorinated, non-PFAS compounds) will be available for a number of years. Therefore, the Agency is considering whether a treatment technique regulatory approach may be appropriate.

The strength of the carbon-fluorine bond makes certain PFAS (such as perfluoroalkyl acids) relatively stable compounds that are not removed by conventional treatment such as coagulation/flocculation/sedimentation. Technologies that have reported removal efficiencies of greater than 90% for certain PFAS include granulated

activated carbon, powdered activated carbon, anion exchange resins, nanofiltration and reverse osmosis (Crone et al., 2019; Dickenson and Higgins, 2016; Ross et al., 2018; USEPA, 2019e). Each of these technologies has benefits and limitations that need to be considered if they are to be used when treating PFAS contaminated drinking water, such as cost and operational feasibility (Speth, 2019). For example, nanofiltration and reverse osmosis are highly effective at removing PFAS but are more costly options and generate large waste streams that may require additional treatment. Anion exchange is effective at removing long-chain PFAS constituents but may be less effective at removing short-chain PFAS. Granular activated carbon has the advantage of being a less costly treatment technology and has the ability to be regenerated, however other organic matter present in the influent water may interact and compete for adsorption sites with PFAS, potentially making treatment less effective. In addition, unintended consequences of PFAS treatment also need consideration given regional differences in source water quality and treatment strategies in the United States. Additional discussion on benefits and limitations associated with drinking water treatment technologies for PFAS can be found in the Regulatory Determination Support Document (USEPA, 2019a).

A treatment technique regulation would address multiple PFAS with similar characteristics that may be removed by similar treatment technologies including some for which validated drinking water methods are currently available.

Monitoring Considerations

Should an MCL be established for PFOA, PFOS, and/or other PFAS chemicals pursuant to section 1412 of the SDWA, PWSs could be required to monitor for these contaminants. The EPA may seek to minimize the monitoring burden on water systems while assuring public health protection. Minimizing the monitoring burden to the maximum extent feasible and allowed by statute could reduce costs for drinking water systems that have other important risk-reduction resource demands. The EPA is considering alternative approaches for this monitoring that reduce monitoring frequency for systems that are reliably and consistently below the MCL or do not detect the contaminant. This framework provides primacy agencies with the flexibility to issue monitoring waivers, with the EPA's approval, which take into account regional and state specific characteristics and concerns. The Standardized Monitoring Framework for regulated synthetic organic chemicals under 40 CFR 141.24(h) provides a framework for determining compliance with a potential future MCL. Under this approach, monitoring frequency would be dependent on whether the contaminant has been detected above a certain ''trigger level'' and/or detected above an MCL, and whether a waiver from monitoring has been granted by the Primacy Agency.

An alternative approach to the Standardized Monitoring Framework could be to require monitoring at public water systems only when data show the presence of PFAS in finished drinking water and those designated by the Primacy Agency. Under this approach, monitoring would be required for public water systems with PFAS monitoring data and/or vulnerable systems designated by the state or Primacy Agency. For example, monitoring could be required if a Primacy Agency is aware of information indicating potential PFAS contamination of the public water supply. Information that could be considered includes proximity to facilities with historical or on-going use of fire-fighting foam and proximity to facilities that use or manufacture PFAS.

2. 1,1-Dichloroethane

a. Background

1,1-Dichloroethane is a halogenated alkane. It is an industrial chemical and is used as a solvent and a chemical intermediate. Annual production and importation of 1,1-dichloroethane in the United States was last reported by IUR in 2006 to be between 500,000 and 1 million pounds. The data show that production of 1,1-dichloroethane in the United States has declined since reporting began in 1986. Under CDR, there were no reports of 1,1-dichloroethane production in 2012, 2013, 2014, or 2015 (USEPA, 2019a).

TRI data for 1,1-dichloroethane from the years 1994–2016 show that an average of about 12,000 pounds per year of reported releases have entered the environment from 2003 onward. The number of states with releases of 1,1 dichloroethane has stayed steady at about five since 2004, while the number of states with surface water discharges has averaged two since 1994; surface water discharges ranged from 0 to 235 pounds per year over the approximately 20-year period (USEPA, 2019a).

1,1-Dichloroethane is expected to have a high likelihood of partitioning to water based on its K_{oc} and water solubility. The octanol-water partitioning coefficient (log K_{ow}) indicates that 1,1-dichloroethane is expected to have a moderate likelihood of partitioning to water, while the Henry's Law Constant (K_H) indicates that this compound is expected to have a low likelihood of partitioning to water. 1,1-Dichloroethane is expected to have moderate to high persistence in certain waters based on biodegradation half-lives (USEPA, 2019a).

b. Statutory Criterion #1 (Adverse Health Effects)

1,1-Dichloroethane may have an adverse effect on the health of persons. Based on a 13-week gavage study in rats (Muralidhara et al., 2001), the kidney was identified as a sensitive target for 1,1-dichloroethane, and no-observed-adverse-effect level (NOAEL) and lowest-observed-adverse-effect level (LOAEL) values of 1,000 and 2,000 mg/kg/day, respectively, were identified based on increased urinary enzyme markers for renal damage and central nervous system (CNS) depression (USEPA, 2006a).

The only available reproductive or developmental study with 1,1-dichloroethane is an inhalation study where pregnant rats were exposed on days 6 through 15 of gestation (Schwetz et al., 1974). No effects on the fetuses were noted at 3,800 ppm. Delayed ossification of the sternum without accompanying malformations was reported at a concentration of 6,000 ppm.

A cancer assessment for 1,1-dichloroethane is available on IRIS (USEPA, 1990a). That assessment classifies the chemical, according to the EPA's 1986 *Guidelines for Carcinogenic Risk Assessment* (USEPA, 1986), as Group C, a possible human carcinogen. This classification is based on no human data and limited evidence of carcinogenicity in two animal species (rats and mice), as shown by increased incidences of hemangiosarcomas and mammary gland adenocarcinomas in female rats and hepatocellular carcinomas and benign uterine polyps in mice (NCI, 1978). The data were considered inadequate to support quantitative assessment. The close structural relationship between 1,1-dichloroethane and 1,2-dichloroethane, which is classified as a B2 probable human carcinogen and produces tumors at many of the same sites where marginal tumor increases were observed for 1,1-dichloroethane, supports the suggestion that the 1,1-isomer could possibly be carcinogenic to humans. Mixed results in initiation/promotion studies and genotoxicity assays are

consistent with this classification. On the other hand, the animals from the 1,1-dichloroethane National Cancer Institute (NCI, 1978) study were housed with animals being exposed to 1,2-dichloroethane providing opportunities for possible co-exposure impacting the 1,1-dichloroethane results. The following groups of individuals may have an increased risk from exposure to 1,1-dichloroethane (NIOSH, 1978; ATSDR, 2015):

- Those with chronic respiratory disease
- Those with liver diseases that impact hepatic microsomal cytochrome P–450 functions
- Individuals with impaired renal function and vulnerable to kidney stones
- Individuals with skin disorders vulnerable to irritation by solvents like 1,1- dichloroethane
- Those who consume alcohol or use pharmaceuticals (*e.g.,* phenobarbital) that alter the activity of cytochrome P–450s

A provisional chronic RfD was derived from the 13-week gavage study in rats based on a NOAEL of 1,000 mg/kg/day administered for five days/week and adjusted to 714.3 mg/kg/day for continuous exposure (an increase in urinary enzymes was the adverse impact on the kidney). The chronic oral RfD of 0.2 mg/kg/day was derived by dividing the normalized NOAEL of 714.3 mg/kg/day in male Sprague-Dawley rats by a combined UF of 3,000. The combined UF includes factors of 10 for interspecies extrapolation, 10 for extrapolation from a subchronic study, 10 for human variability, and 3 for database deficiencies (including lack of reproductive and developmental toxicity tests by the oral route). This assessment noted several limitations in the critical study and database as a whole. Specifically, that the reporting of the results in the critical study were marginally adequate and that the database lacks information on reproductive and developmental and nervous system toxicity.

The EPA calculated an HRL for 1,1-dichloroethane of 1,000 µg/L, based on the EPA oral RfD of 0.2 mg/kg/day, using 2.5 L/day drinking water ingestion, 80 kg body weight and a 20% RSC factor.

c. Statutory Criterion #2 (Occurrence at Frequency and Levels of Public Health Concern)

The EPA proposes to find that 1,1-dichloroethane does not occur with a frequency and at levels of public health concern in public water systems based on the EPA's evaluation of the following occurrence information.

The primary occurrence data for 1,1-dichloroethane are recent (2013–2015) nationally-representative drinking water monitoring data generated through the EPA's UCMR 3. Under UCMR 3, 36,848 samples were collected from 4,916 PWSs and analyzed for 1,1-dichloroethane. The contaminant was not detected in any of the samples at levels greater than ½ the HRL (500 µg/L) or the HRL (1,000 µg/L). 1,1-Dichloroethane was detected in about 2.3% samples at or above the MRL (0.03 µg/L) (USEPA, 2019a; USEPA, 2019b).

Occurrence data for 1,1-dichloroethane in finished drinking water are also available from UCM Rounds 1 and 2 (1988–1992 and 1993–1997). None of those samples exceeded ½ the HRL or the HRL. In the Round 1 cross-section states, 1,1 dichloroethane was detected at 233 PWSs (1.14% of PWSs). Detected concentrations ranged from 0.01 µg/L to 500 µg/L. In the Round 2 cross-section states, 1,1 dichloroethane was detected at 184 PWSs (0.74% of PWSs). Detected concentrations ranged from 0.00126 µg/L to 159 µg/L (USEPA, 2008c; USEPA, 2019a).

Occurrence data for 1,1-dichloroethane in ambient water are available from the NAWQA program. Those data show that 1,1-dichloroethane was detected in between 2% and 4% of samples from between 2% and 4% of sites. No detections were greater than the HRL. The median concentrations based on detections were less than 0.06 µg/L (WQP, 2018). Ambient water data for 1,1-dichloroethane analysis are also available from the NWIS database. Those data show that 1,1-dichloroethane was detected in approximately 5% of samples (1,152 out of 24,560) and at approximately 5% of sites (620 out of 12,057). The median concentration of detections was 0.380 µg/L (USEPA, 2019a).

d. Statutory Criterion #3 (Meaningful Opportunity)

1,1-Dichloroethane does not present a meaningful opportunity for health risk reduction through regulation for persons served by PWSs based on the estimated exposed population, including sensitive populations. UCMR 3 findings indicate that the estimated population exposed to 1,1-dichloroethane at levels of public health concern is 0%. As a result, the Agency finds that an NPDWR for 1,1-dichloroethane does not present a meaningful opportunity for health risk reduction.

e. Preliminary Regulatory Determination for 1,1-dichloroethane

The Agency is making a preliminary determination to not regulate 1,1-dichloroethane with an NPDWR after evaluating health, occurrence, and other related information against the three SDWA statutory criteria. While data suggest that 1,1-dichloroethane may have an adverse effect on human health, the occurrence data indicate that 1,1-dichloroethane is not occurring or is not likely to occur in PWSs with a frequency and at levels of public health concern. Therefore, the Agency has determined that an NPDWR for 1,1-dichloroethane would not present a meaningful opportunity to reduce health risk for persons served by PWSs. The *Regulatory Determination 4 Support Document* (USEPA, 2019a) and the *Occurrence Data from the Third Unregulated Contaminant Monitoring Rule (UCMR 3)* (USEPA, 2019b) present additional information and analyses supporting the Agency's evaluation of 1,1-dichloroethane.

3. Acetochlor

a. Background

Acetochlor is a chloroacetanilide pesticide that is used as an herbicide for pre-emergence control of weeds. It was first registered by the EPA in 1994. It is registered for use on corn crops (field corn and popcorn); corn fields treated with acetochlor may later be rotated to grain sorghum (milo), soybeans, wheat, and tobacco. In March of 2006, the EPA released a *Report of the Food Quality Protection Act (FQPA) Tolerance Reassessment Progress and Risk Management Decision (TRED) for Acetochlor* (USEPA, 2006b). In 2010, the EPA approved the use of acetochlor on cotton as a rotational crop (USEPA, 2010a). Synonyms for acetochlor include 2-chloro-2′-methyl-6-ethyl-N-ethoxymethylacetanilide (USEPA, 2019a).

According to the EPA Pesticide Industry Sales and Usage reports, the amount of acetochlor active ingredient used in the United States was between 31 and 36 million pounds in 1997; between 30 and 35 million pounds in 1999, 2001 and 2003; between 26 and 31 million pounds in 2005; between 28 and 33 million pounds in 2007; between 23 and 33 million pounds in 2009; and between 28 and 38 million pounds in 2012 (USEPA, 2019a).

USGS pesticide use data show that there has been an increase in the annual usage of acetochlor, from about 32 million pounds per year in 2010 to over 45 million pounds in 2016. This increase can largely be attributed to the

use of acetochlor on crops other than corn (USEPA, 2019a).

If released to soil, acetochlor is expected to have moderate to high mobility (HSDB, 2012). Acetochlor is expected to have a high likelihood of partitioning to water based on its K_H. The values for K_{oc} indicate that acetochlor is expected to have a moderate to high likelihood of partitioning to water. The water solubility indicates that acetochlor is expected to have a moderate likelihood of partitioning to water. Acetochlor is expected to have low to moderate persistence based on aerobic and anaerobic biodegradation/biotransformation half-lives (USEPA, 2019a).

b. Statutory Criterion #1 (Adverse Health Effects)

Acetochlor may have an adverse effect on the health of persons. Subchronic and chronic oral studies have demonstrated adverse effects on the liver, thyroid (secondary to the liver effects), nervous system, kidney, lung, testes, and erythrocytes in rats and mice (USEPA, 2006c; USEPA, 2018c). There was evidence of carcinogenicity in studies conducted with acetochlor in rats and mice and a non-mutagenic mode of action was demonstrated for nasal and thyroid tumors in rats (USEPA, 2006c). Cancer effects include nasal tumors and thyroid tumors in rats, lung tumors and histocytic sarcomas in mice, and liver tumors in both rats and mice (Ahmed and Seely, 1983; Ahmed et al., 1983; Amyes, 1989; Hardisty, 1997a; Hardisty, 1997b; Hardisty, 1997c; Naylor and Ribelin, 1986; Ribelin, 1987; USEPA, 2004b; USEPA, 2006c; and Virgo and Broadmeadow, 1988). No biologically sensitive human subpopulations have been identified for acetochlor. Developmental and reproductive toxicity studies do not indicate increased susceptibility to acetochlor exposure at early life stages in test animals (USEPA, 2006c).

The study used to derive the oral RfD is a 1-year oral chronic feeding study conducted in beagle dogs. This study describes a NOAEL of 2 mg/kg/day, and a LOAEL of 10 mg/kg/day, based on the critical effects of increased salivation; increased levels of alanine aminotransferase (ALT) and ornithine carbamoyl transferase (OTC); increased triglyceride levels; decreased blood glucose levels; and alterations in the histopathology of the testes, kidneys, and liver of male beagle dogs (USEPA, 2018c; ICI, Inc., 1988). The UF applied was 100 (10 for intraspecies variation and 10 for interspecies extrapolation). The EPA OPP RfD for acetochlor of 0.02 mg/kg/day, based on the NOAEL of 2 mg/kg/day from the 1-year oral chronic feeding study in beagle dogs, is expected to be protective of both noncancer and cancer effects.

The EPA calculated an HRL of 100 µg/L based on the EPA OPP RfD for non-cancer effects for acetochlor of 0.02 mg/kg/day (USEPA, 2018c) using 2.5 L/day drinking water ingestion, 80 kg body weight, and a 20% RSC factor.

c. Statutory Criterion #2 (Occurrence at Frequency and Levels of Public Health Concern)

The EPA proposes to find that acetochlor does not occur with a frequency and at levels of public health concern in public water systems based on the EPA's evaluation of the following occurrence information.

The primary data for acetochlor are from the UCMR 1 a.m. (2001–2003) and UCMR 2 SS (2008–2010). Acetochlor was not detected at or above the MRL of 2 µg/L or above the HRL of 100 µg/L in any of the 33,778 UCMR 1 a.m. samples (USEPA, 2008b; USEPA, 2019a) or in any of the 11,193 UCMR 2 SS samples (USEPA, 2015a; USEPA, 2019a).

To ascertain the impact of increased usage of acetochlor since the end of UCMR 2, the EPA assessed ambient water and limited finished water data collected after 2010. Sources of such data include the NAWQA program and the NWIS database. Three cycles of NAWQA data show that acetochlor was detected in between 13% and 23% of samples from between 3% and 10% of sites. While maximum values in NAWQA Cycle 2 (2002–2012) and Cycle 3 (2013–2017) monitoring exceeded the HRL (215 µg/L in 2004 and 137 µg/L in 2013) (only one sample in each of those two cycles exceeded the HRL), 90th percentile levels of acetochlor remained below 1 µg/L. More than 10,000 samples were collected in each cycle. Non-NAWQA NWIS data (1991–2016), which included limited finished water data in addition to the ambient water data, show no detected concentrations greater than the HRL (USEPA, 2019a).

d. Statutory Criterion #3 (Meaningful Opportunity)

Acetochlor does not present a meaningful opportunity for health risk reduction for persons served by PWSs based on the estimated exposed population, including sensitive populations. The estimated population exposed to acetochlor at levels of public health concern is 0% based on UCMR 1 finished water data gathered from 2001 to 2003 and UCMR 2 finished water data gathered from 2008 to 2010. As a result, the Agency finds that an NPDWR for acetochlor does not present a meaningful opportunity for health risk reduction.

e. Preliminary Regulatory Determination for Acetochlor

The Agency is making a preliminary determination to not regulate acetochlor with an NPDWR after evaluating health, occurrence, and other related information against the three SDWA statutory criteria. While data suggest that acetochlor may have an adverse effect on human health, the occurrence data indicate that acetochlor is not occurring or not likely to occur in PWSs with a frequency and at levels of public health concern. The EPA also noted that the use of acetochlor has increased since the nationally representative data collection from finished water under UCMR 2 (*i.e.,* 2008–2010). A review of ambient and limited finished water monitoring data collected since 2010 in NAWQA and NWIS show no 90th percentile values exceeding 1 µg/L.

Therefore, the Agency has determined that an NPDWR for acetochlor would not present a meaningful opportunity to reduce health risk for persons served by PWSs. The *Regulatory Determination 4 Support Document* (USEPA, 2019a), *The Analysis of Occurrence Data from the First Unregulated Contaminant Monitoring Regulation (UCMR 1) in Support of Regulatory Determinations for the Second Drinking Water Contaminant Candidate List* (USEPA, 2008b), and the *Occurrence Data from the Second Unregulated Contaminant Monitoring Regulation (UCMR 2)* (USEPA, 2015a) present additional information and analyses supporting the Agency's evaluation of acetochlor.

4. Methyl Bromide (Bromomethane)

a. Background

Methyl bromide is a halogenated alkane and occurs as a gas. Methyl bromide has been used as a fumigant fungicide, applied to soil before planting, to crops after harvest, to vehicles and buildings, and for other specialized purposes.

Methyl bromide is an ozone-depleting chemical regulated under the Montreal Protocol. Use of the chemical in the United States was phased out in 2005, except for specific critical use exemptions and quarantine and pre-shipment exemptions. Critical use exemptions have included strawberry cultivation and production of dry cured pork. Additional information on the methyl bromide phase-out and exemptions in the United States can be found on the EPA's website: *https://*

www.epa.gov/ods-phaseout/methyl-bromide.

In August of 2006, the EPA released a TRED for methyl bromide and a RED for commodity uses (USEPA, 2006d). A RED for soil fumigant uses was released in July 2008, and amended in May 2009 (USEPA, 2009e). In 2011, the EPA issued a cancellation order for certain soil-related uses of methyl bromide, but this order did not affect its use as a post-harvest fumigant (76 FR 29238; USEPA, 2011d). Synonyms for methyl bromide include bromomethane, monobromomethane, curafume, Meth-O-Gas, and Brom-O-Sol (HSDB, 2019).

A report by the United Nations Environment Programme (UNEP, 2018) indicates that critical use exemptions in the United States under the Montreal Protocol declined steadily from 9,553 metric tons of methyl bromide in 2005 to 235 metric tons in 2016 and stood at 0 in 2017 and 2018. A total 50 metric tons were ''on hand'' in the United States at the end of 2016 (UNEP, 2018). Exempted quarantine and pre-shipment uses continue. Production data for methyl bromide are available from the EPA's IUR and CDR programs, and industrial release data are available from the EPA's TRI database, as described below.

The most recent quantities of methyl bromide produced and imported (in 2013, 2014, and 2015, as reported in CDR) are classified as CBI. The last publicly available data for production of methyl bromide are from 2006, under IUR, when production was in the range of 10 to <50 million pounds (USEPA, 2019a).

TRI data from 1988 to 2016 show a general long-term declining trend in industrial releases of methyl bromide, from over one million pounds per year in the 1990s to under 500,000 pounds most years since 2010. Air emissions have tended to dominate releases, with the exception of 2015, when an anomalous large quantity (350,000 pounds) was reported released by underground injection from a single facility. In 2016, facilities in 11 states reported releases of any kind and facilities in two states reported on-site surface water discharges (USEPA, 2019a).

According to the EPA's Pesticide Industry Sales and Usage reports, the amount of methyl bromide active ingredient used in the United States was between 38 and 45 million pounds in 1997; between 28 and 33 million pounds in 1999; between 20 and 25 million pounds in 2001; between 13 and 17 million pounds in 2003; between 12 and 16 million pounds in 2005; between 11 and 15 million pounds in 2007; between 5 and 9 million pounds in 2009; and between 2 and 6 million pounds in 2012 (USEPA, 2019a).

USGS pesticide use data show that there has been a decrease of methyl bromide use through 2016 down to about 2 million pounds from a high of about 78 million pounds in 1995 (USGS, 2018).

If released to dry or moist soil, methyl bromide is expected to be volatile (HSDB, 2019); its K_H indicates that methyl bromide is expected to have a low likelihood of partitioning to water from air. Methyl bromide is expected to have a high likelihood of partitioning to water based on its K_{oc} and water solubility. The log K_{ow} indicates that methyl bromide is expected to have a moderate likelihood of partitioning to water. Methyl bromide is predicted to have low persistence in soil based on experiments under simulated conditions in reaction with aniline. Measured hydrolysis half-lives indicate moderate persistence in water (USEPA, 2019a).

b. Statutory Criterion #1 (Adverse Health Effects)

Methyl bromide may have an adverse effect on the health of persons. The limited number of studies investigating the oral toxicity of methyl bromide indicate that the route of administration influences the toxic effects observed (USEPA, 2006e). The forestomach of rats (forestomachs are not present in humans) appears to be the most sensitive target of methyl bromide when it is administered orally by gavage (ATSDR, 1992a). Acute and subchronic oral gavage studies in rats identified stomach lesions (Kaneda et al., 1998), hyperemia (excess blood) (Danse et al., 1984), and ulceration (Boorman et al., 1986; Danse et al., 1984) of the forestomach. However, forestomach effects were not observed in rats and stomach effects were not observed in dogs that were chronically exposed to methyl bromide in the diet, potentially because methyl bromide degrades to other bromide compounds in the food (Mertens, 1997). Decreases in food consumption, body weight, and body weight gain were noted in the chronic rat study when methyl bromide was administered in capsules (Mertens, 1997).

In a subchronic (13-week) rat study (Danse et al., 1984), a NOAEL of 1.4 mg/kg/day (a time weighted average, 5/7 days, of the 2 mg/kg/day dose group) was selected in the EPA IRIS assessment based on severe hyperplasia of the stratified squamous epithelium in the forestomach, in the next highest dose group of 7.1 mg/kg/day (USEPA, 1989a). In ATSDR's Toxicological Profile (ATSDR, 1992a), a lower dose of 0.4 mg/kg/day is selected as the NOAEL because ''mild focal hyperemia'' was observed at the 1.4 mg/kg/day dose level. It is worth noting that authors of this study reported neoplastic changes in the forestomach. However, the EPA and others (USEPA, 1985; Schatzow, 1984) re-evaluated the histological results, concluding that the lesions were hyperplasia and inflammation, not neoplasms. ATSDR notes that histological diagnosis of epithelial carcinomas in the presence of marked hyperplasia is difficult (Wester and Kroes 1988; ATSDR 1992a). Additionally, the hyperplasia of the forestomach observed after 13 weeks of exposure to bromomethane regressed when exposure ended (Boorman et al. 1986; ATSDR 1992a).

The EPA selected an OPP Human Health Risk Assessment from 2006 as the basis for developing the HRL for methyl bromide (USEPA, 2006e). As described in the OPP document, the study was of chronic duration (two years) with four groups of male rats and four groups of female rats treated orally via encapsulated methyl bromide. In the OPP assessment (USEPA, 2006e), Mertens (1997) was identified as the critical study and decreased body weight, decreased rate of body weight gain, and decreased food consumption were the critical effects in rats orally exposed to methyl bromide (USEPA, 2006e). The NOAEL was 2.2 mg/kg/day and the LOAEL was 11.1 mg/kg/day. The RfD derived in the 2006 OPP Human Health Assessment is 0.022 mg/kg/day, based on the point of departure (POD) of 2.2 mg/kg/day (the NOAEL) and a combined uncertainty factor (UF) of 100 for interspecies variability (10) and intraspecies variability (10). No benchmark dose modeling was performed.

Neurological effects reported after inhalation exposures have not been reported after oral exposures, indicating that route of exposure may influence the most sensitive adverse health endpoint (USEPA, 1988).

Limited data are available regarding the developmental or reproductive toxicity of methyl bromide, especially via the oral route of exposure. ATSDR (1992a) found no information on developmental effects in humans with methyl bromide exposure. An oral developmental toxicity study of methyl bromide in rats (doses of 3, 10, or 30 mg/kg/day) and rabbits (doses of 1, 3, or 10 mg/kg/day) found that there were no treatment-related adverse effects in fetuses of the treated groups of either species (Kaneda et al., 1998). ATSDR's 1992 Toxicological Profile also did not

identify any LOAELs for rats or rabbits in this study. In rats exposed to 30 mg/kg/day, there was an increase in fetuses having 25 presacral vertebrae; however, ATSDR notes that there were no significant differences in the number of litters with this variation and the effect was not exposure-related (ATSDR, 1992a). No significant alterations in resorptions or fetal deaths, number of live fetuses, sex ratio, or fetal body weights were observed in rats and no alterations in the occurrence of external, visceral, or skeletal malformations or variations were observed in the rabbits. Some inhalation studies reported no effects on development or reproduction, but other inhalation studies show adverse developmental effects. For example, Hardin et al. (1981) and Sikov et al. (1980) conducted studies in rats and rabbits and found no developmental effects, even when maternal toxicity was severe (ATSDR, 1992a). However, another inhalation study of rabbits found increased incidence of gallbladder agenesis, fused vertebrae, and decreased fetal body weights in offspring (Breslin et al., 1990). Decreased pup weights were noted in a multigeneration study in rats exposed to 30 ppm (Enloe et al., 1986). Reproductive effects were noted in intermediate-duration inhalation studies in rats and mice (Eustis et al., 1988; Kato et al., 1986), which indicated that the testes may undergo degeneration and atrophy at high exposure levels.

In the OPP HHRA for methyl bromide (USEPA, 2006e), methyl bromide is classified as ''not likely to be carcinogenic to humans''. In 2007, the EPA published a PPRTV report which stated that there is ''inadequate information to assess the carcinogenic potential'' of methyl bromide in humans (USEPA, 2007b). The PPRTV assessment agrees with earlier National Toxicology Program (NTP) conclusions that the available data indicate that methyl bromide can cause genotoxic and/or mutagenic changes. The PPRTV assessment states that the results in studies by Vogel and Nivard (1994) and Gansewendt et al. (1991) clearly indicate methyl bromide is distributed throughout the body and is capable of methylating DNA in vivo. However, the PPRTV assessment also summarizes the results of several studies in mice and rats that have not demonstrated evidence of methyl bromide-induced carcinogenic changes (USEPA, 2007b; NTP, 1992; Reuzel et al. 1987; ATSDR, 1992a). In 2012, an epidemiology study was published that concluded there was a significant monotonic exposure-dependent increase in stomach cancer risk among 7,814 applicators of methyl bromide (Barry et al., 2012). In OPP's Draft HHRA for Methyl Bromide, OPP reviews all the epidemiological studies for methyl bromide, including the Barry et al. (2012) Agricultural Health Study. OPP concludes that ''based on the review of these studies, there is insufficient evidence to suggest a clear associative or causal relationship between exposure to methyl bromide and carcinogenic or non-carcinogenic health outcomes.''

According to ATSDR (1992a) and the EPA OPP assessment (USEPA, 2006e), no studies suggest that a specific subpopulation may be more susceptible to methyl bromide, though there is little information about susceptible lifestages or subpopulations when exposed via the oral route. Because the critical effects of decreased body weight, decreased rate of body weight gain, and decreased food consumption in this study are not specific to a sensitive subpopulation or life stage, the target population of the general adult population was selected in deriving the HRL for regulatory determination. EPA's OPP assessment conducted additional exposure assessments for lifestages that may increase exposure to methyl bromide and concluded that no lifestages have expected exposure greater than 10% of the chronic population-adjusted dose (cPAD), including children.

The EPA calculated an HRL of 100 µg/L (rounded from 140.8 µg/L) based on an EPA OPP assessment cPAD of 0.022 mg/kg/day and using 2.5 L/day drinking water ingestion, 80 kg body weight, and a 20% RSC factor (USEPA, 2006d; USEPA, 2011b, Table 8–1 and 3–33).

c. Statutory Criterion #2 (Occurrence at Frequency and Levels of Public Health Concern)

The EPA proposes to find that methyl bromide does not occur with a frequency and at levels of public health concern in PWSs based on the EPA's evaluation of the following occurrence information.

The primary data for methyl bromide are from the UCMR 3 a.m., which was collected from January 2013 to December 2015. A total of 36,848 samples for methyl bromide were collected from 4,916 systems. Of these systems, 49 (1.0% of systems) reported at least one detection at or above the MRL of 0.2 µg/L. A total of 0.31% of samples had concentrations greater than or equal to the MRL (0.2 µg/L). Reported methyl bromide concentrations range from 0.2 µg/L to 6.9 µg/L. There was no occurrence above the ½ HRL or HRL thresholds.

In all three NAWQA cycles, methyl bromide was detected in fewer than 1% of samples from fewer than 2% of sites. No detections were greater than the HRL in any of the three cycles. The median concentration among detections were 0.5 µg/L and 0.8 µg/L in Cycle 1 and Cycle 3, respectively. There were no detections in Cycle 2. The results of the non-NAWQA NWIS analysis show that methyl bromide was detected in approximately 0.1% of samples at approximately 0.1% of sites. The median concentration among detections was 0.6 µg/L.

d. Statutory Criterion #3 (Meaningful Opportunity)

Methyl bromide does not present a meaningful opportunity for health risk reduction for persons served by PWSs based on the estimated exposed population, including sensitive populations. UCMR 3 findings indicate that the estimated population exposed to methyl bromide at levels of public health concern is 0%. As a result, the Agency finds that an NPDWR for methyl bromide does not present a meaningful opportunity for health risk reduction.

e. Preliminary Regulatory Determination for Methyl Bromide

The Agency is making a preliminary determination to not regulate methyl bromide with an NPDWR after evaluating health, occurrence, and other related information against the three SDWA statutory criteria. While data suggest that methyl bromide may have an adverse effect on human health, the occurrence data indicate that methyl bromide is not occurring or not likely to occur in PWSs with a frequency and at levels of public health concern. Furthermore, in accordance with U.S. obligations under the Montreal Protocol, production and importation of methyl bromide has steadily declined since 2005.

Therefore, the Agency has determined that an NPDWR for methyl bromide would not present a meaningful opportunity to reduce health risk for persons served by PWSs. The *Regulatory Determination 4 Support Document* (USEPA, 2019a) and the *Occurrence Data from the Third Unregulated Contaminant Monitoring Rule (UCMR 3)* (USEPA, 2019b) present additional information and analyses supporting the Agency's evaluation of methyl bromide.

5. Metolachlor

a. Background

Metolachlor is a chloroacetanilide pesticide that is used as an herbicide for weed control. Initially registered in

1976 for use on turf, metolachlor has more recently been used on corn, cotton, peanuts, pod crops, potatoes, safflower, sorghum, soybeans, stone fruits, tree nuts, non-bearing citrus, non-bearing grapes, cabbage, certain peppers, buffalograss, guymon bermudagrass for seed production, nurseries, hedgerows/fencerows, and landscape plantings. In April of 1995, the EPA released a RED for metolachlor (USEPA, 1995b) and a TRED was released in June of 2002 (USEPA, 2002c). In 2012, the EPA reinstated tolerances for metolachlor on popcorn to rectify an omission of these tolerances in previous documentation (USEPA, 2012b). The metolachlor molecule can exist in right- and left-handed versions (enantiomers), labeled ''R-'' and ''S-''. (The chemical terms are dextrorotatory and levorotatory: the factor refers to the direction the compound in solution rotates polarized light.) The ''S-'' version is more potent as a pesticide. When manufacturers found a way of producing metolachlor that was predominantly the ''S-'' enantiomer in the late 1990s, they began marketing that as ''S-metolachlor,'' while the racemic (roughly evenly balanced) mixture continues to be sold as ''metolachlor'' (Hartzler, 2004). Metolachlor and S-metolachlor are under registration review (USEPA, 2014b). Synonyms for metolachlor include dual and bicep (USEPA, 2019a).

Based on private market usage data, the EPA estimated that approximately 9 million pounds of metolachlor active ingredient and 28 million pounds of S-metolachlor active ingredient were applied annually between 1998 and 2012, both mostly on corn (USEPA, 2014b).

According to the EPA's Pesticide Industry Sales and Usage reports, the amount of metolachlor active ingredient (the racemic mixture) used in the United States was between 45 and 50 million pounds in 1987; between 63 and 69 million pounds in 1997; between 26 and 30 million pounds in 1999; between 15 and 22 million pounds in 2001; between 1 and 5 million pounds on 2009; and between 4 and 8 million pounds in 2012. Furthermore, the amount of S-metolachlor active ingredient used was between 16 and 19 million pounds in 1999; between 20 and 24 million pounds in 2001; between 28 and 33 million pounds in 2003; between 27 and 32 million pounds in 2005; between 30 and 35 million pounds in 2007; between 24 and 34 million pounds in 2009; and between 34 and 44 million pounds in 2012 (USEPA, 2019a).

USGS pesticide use data show that there has been a mild increase in metolachlor (racemic mixture) with a greater change in the amount of S-metolachlor relative to metolachlor. Between 2010 and 2016, the increase in metolachlor usage is about 3 million pounds, or about 30%, and for S-metolachlor the increase is about 25 million pounds, or about 75% (USEPA, 2019a).

If released to soil, metolachlor is expected to have moderate to high mobility. The EPA's RED document indicates that substantial leaching and/or runoff of metolachlor from soil is expected to occur (USEPA, 1995b). Metolachlor is expected to have a high likelihood of partitioning to water based on its $K_{H,}$ while its log K_{ow} and water solubility indicate that metolachlor is expected to have a moderate likelihood of partitioning to water. The literature provides a wide range of values for K_{oc} (USEPA, 2019a provides additional information). Metolachlor is expected to have moderate to high persistence in soil and water under aerobic conditions based on aerobic biodegradation half-lives and high persistence in soil and water under anaerobic conditions based on anaerobic biodegradation half-lives (USEPA, 2019a).

b. Statutory Criterion #1 (Adverse Health Effects)

Metolachlor may have an adverse effect on the health of persons. The existing toxicological database includes studies evaluating both metolachlor and S-metolachlor. When combined with the toxicology database for metolachlor, the toxicology database for S-metolachlor is considered complete for risk assessment purposes (USEPA, 2018d). In subchronic (metolachlor and S-metolachlor) (USEPA, 1995b; USEPA, 2018d) and chronic (metolachlor) (Hazelette, 1989; Tisdel, 1983; Page, 1981; USEPA, 2018d) toxicity studies in dogs and rats, decreased body weight was the most commonly observed effect. Chronic exposure to metolachlor in rats also resulted in increased liver weight and microscopic liver lesions in both sexes (USEPA, 2018d). No systemic toxicity was observed in rabbits when metolachlor was administered dermally, though dermal irritation was observed at lower doses (USEPA, 2018d). Portal of entry effects (*e.g.,* hyperplasia of the squamous epithelium and mucous cell) occurred in the nasal cavity at lower doses in a 28-day inhalation study in rats (USEPA, 2018d). Systemic toxicity effects were not observed in this study. Immunotoxicity effects were not observed in mice exposed to S-metolachlor (USEPA, 2018d).

While some prenatal developmental studies in the rat and rabbit with both metolachlor and S-metolachlor revealed no evidence of a qualitative or quantitative susceptibility in fetal animals, decreased pup body weight was observed in a two-generation study (Page, 1981, USEPA, 2018d). Though there was no evidence of maternal toxicity, decreased pup body weight in the F1 and F2 litters was observed, indicating developmental toxicity (Page, 1981; USEPA, 1990b). Therefore, sensitive lifestages to consider include infants, as well as pregnant women and their fetus, and lactating women.

Although treatment with metolachlor did not result in an increase in treatment-related tumors in male rats or in mice (both sexes), metolachlor caused an increase in liver tumors in female rats (USEPA, 2018d). There was no evidence of mutagenic or cytogenetic effects in vivo or in vitro (USEPA, 2018d). In 1994 (USEPA, 1995b), the EPA classified metolachlor as a Group C possible human carcinogen, in accordance with the 1986 *Guidelines for Carcinogen Risk Assessment* (USEPA, 1986). In 2017 (USEPA, 2018d), the EPA re-assessed the cancer classification for metolachlor in accordance with the EPA's final *Guidelines for Carcinogen Risk Assessment* (USEPA, 2005b), and reclassified metolachlor/S-metolachlor as ''Not Likely to be Carcinogenic to Humans'' at doses that do not induce cellular proliferation in the liver. This classification was based on convincing evidence of a constitutive androstane receptor (CAR)-mediated mitogenic MOA for liver tumors in female rats that supports a nonlinear approach when deriving a guideline that is protective for the tumor endpoint (USEPA, 2018d).

A recent OPP HHRA identified a two-generation reproduction study in rats as the critical study (USEPA, 2018d). OPP proposed an RfD for metolachlor of 0.26 mg/kg/day, derived from a NOAEL of 26 mg/kg/day for decreased pup body weight in the F1 and F2 litters. A combined UF of 100 was used based on interspecies extrapolation (10), intraspecies variation (10), and an FQPA Safety Factor of 1.[24] This RfD is

[24] The EPA notes that for pesticide registrations under FIFRA, EPA's Office of Pesticides derives acute or chronic population adjusted doses (PADs) using an FQPA Safety Factor mandated by the FQPA taking into consideration potential pre and/or postnatal toxicity and completeness of the data with respect to exposure and toxicity to infants and children. In the majority of instances, the PAD and the RfD are the same. It is only in those few instances when the FQPA Safety Factor is attributed to residual uncertainty with regard to exposure or pre/postnatal toxicity that the RfD and PAD differ. More recently, FQPA Safety Factors can account for uncertainties in the overall completeness of the

considered protective of carcinogenic effects as well as effects observed in chronic toxicity studies (USEPA, 2018d). The decreased F1 and F2 litter pup body weights in the absence of maternal toxicity were considered indicative of increased susceptibility to the pups. Therefore, a rate of 0.15 L/kg/day was selected from the *Exposure Factors Handbook* (USEPA, 2011b) to represent the consumers-only estimate of DWI based on the combined direct and indirect community water ingestion at the 90th percentile for bottle fed infants. This estimate is more protective than the estimate for pregnant women (0.033 L/kg/day) or lactating women (0.054 L/kg/day). DWI and BW parameters are further outlined in the *Exposure Factors Handbook* (USEPA, 2011b).

The EPA OW calculated an HRL for metolachlor of 300 µg/L (rounded from 0.347 mg/L). The HRL was derived from the oral RfD of 0.26 mg/kg/day for bottle fed infants ingesting 0.15 L/kg/day water, with the application of a 20% RSC.

c. Statutory Criterion #2 (Occurrence at Frequency and Levels of Public Health Concern)

The EPA proposes to find that metolachlor does not occur with a frequency and at levels of public health concern in public water systems based on the EPA's evaluation of the following occurrence information.

The primary data for metolachlor are from the UCMR 2 SS. A total of 11,192 metolachlor samples were collected from 1,198 systems. Of these systems, three (0.25%) had metolachlor detections and none of the detections were greater than ½ the HRL or the HRL of 300 µg/L (USEPA, 2015a; USEPA, 2019a).

Nationally representative finished water occurrence data for metolachlor are also available from the UCM Round 2 data set. In the Round 2 cross-section states, metolachlor was detected at 108 PWSs (0.83% of PWSs). Detected concentrations ranged from 0.01 µg/L to 13.8 µg/L. There were no exceedances of ½ the HRL or the HRL of 300 µg/L (USEPA, 2008c; USEPA, 2019a).

To ascertain the impact of increased usage of metolachlor since the end of UCMR 2, the EPA assessed ambient water and limited finished water data collected after 2010. Sources of such data include the NAWQA program and the NWIS database. The EPA found no values in the NAWQA data set that exceeded the HRL. The highest value in the NWIS data set (376 µg/L) exceeded the HRL, but the 99th percentile value (13.3 µg/L) did not exceed the HRL[25] (USEPA, 2019a).

d. Statutory Criterion #3 (Meaningful Opportunity)

Metolachlor does not present a meaningful opportunity for health risk reduction for persons served by PWSs based on the estimated exposed population, including sensitive populations. UCMR 2 findings indicate that the estimated population exposed to metolachlor at levels of public health concern is 0%. As a result, the Agency finds that an NPDWR for metolachlor does not present a meaningful opportunity for health risk reduction.

e. Preliminary Regulatory Determination for Metolachlor

The Agency is making a preliminary determination to not regulate metolachlor with an NPDWR after evaluating health, occurrence, and other related information against the three SDWA statutory criteria. While data suggest that metolachlor may have an adverse effect on human health, the occurrence data indicate that metolachlor is not occurring or not likely to occur in PWSs with a frequency and at levels of public health concern. The EPA will continue to evaluate metolachlor as new finished water data become available.

Therefore, the Agency has determined that an NPDWR for metolachlor would not present a meaningful opportunity to reduce health risk for persons served by PWSs. The *Regulatory Determination 4 Support Document* (USEPA, 2019a) and the *Occurrence Data from the Second Unregulated Contaminant Monitoring Regulation (UCMR 2)* (USEPA, 2015a) present additional information and analyses supporting the Agency's evaluation of metolachlor.

6. Nitrobenzene

a. Background

Nitrobenzene is a synthetic aromatic nitro compound and occurs as an oily, flammable liquid. It is commonly used as a chemical intermediate in the production of aniline and drugs such as acetaminophen. Nitrobenzene is also used in the manufacturing of paints, shoe polishes, floor polishes, metal polishes, aniline dyes, and pesticides (USEPA, 2019a).

IUR data indicate that production of nitrobenzene in the United States increased between 1986 and 1990 and stood at over 1 billion pounds per year from 1990 to 2006. Data from the EPA's CDR program indicate that production of nitrobenzene was in the range of 1–5 billion pounds per year in 2012, 2013, 2014, and 2015 (USEPA, 2019a).

TRI data for nitrobenzene show that total releases were in the range of hundreds of thousands of pounds per year from 1988 through 2016. Underground injection dominated total reported releases, fluctuating between approximately 191,000 pounds (in 2003) and over 860,000 pounds (in 1992). On-site air emissions were in the range of tens of thousands of pounds annually. Since 1999, surface water discharges of nitrobenzene have not exceeded 500 pounds per year (USEPA, 2019a).

Nitrobenzene is expected to have a high likelihood of partitioning to water based on its water solubility. Multiple values for K_{oc} indicate that nitrobenzene is expected to have a moderate to high likelihood of partitioning to water, while the log K_{ow} and K_H indicate that nitrobenzene is expected to have a moderate likelihood of partitioning to water. Nitrobenzene is expected to have moderate persistence in water based on its aerobic biodegradation half-life (USEPA, 2019a).

b. Statutory Criterion #1 (Adverse Health Effects)

Nitrobenzene may have an adverse effect on the health of persons. NTP (1983) conducted a 90-day oral gavage study of nitrobenzene in F344 rats and B6C3F1 mice. The rats were more sensitive to the effects of nitrobenzene exposure than the mice, and changes in absolute and relative organ weights, hematologic parameters, splenic congestion, and histopathologic lesions in the spleen, testis, and brain were reported. Based on statistically significant changes in absolute and relative organ weights, splenic congestion, and increases in reticulocyte count and methemoglobin (metHb) concentration, a LOAEL of 9.38 mg/kg/day was identified for the subchronic oral effects of nitrobenzene in F344 male rats (USEPA, 2009f). This was the lowest dose studied, so a NOAEL was not identified. The mice were treated with higher doses and were generally more resistant to nitrobenzene toxicity, the toxic endpoints were similar in both species.

The testis, epididymis, and seminiferous tubules of the male reproductive system are targets of nitrobenzene toxicity in rodents. In male rats (F344/N and CD) and mice

toxicity database, extrapolation from subchronic to a chronic study duration, and LOAEL to NOAEL extrapolation.

[25] Approximately 99.9% of the metolachlor samples in NWIS are from ambient water. The highest finished water value in the NWIS data set is 0.24 µg/L, which is much lower than the HRL.

(B6C3F1), nitrobenzene exposure via the oral and inhalation routes results in histopathologic lesions of the testis and seminiferous tubules, testicular atrophy, a large decrease in sperm count, and a reduction of sperm motility and/or viability, which contribute to a loss of fertility (NTP, 1983; Bond et al., 1981; Koida et al., 1995; Matsuura et al., 1995; Kawashima et al., 1995). These data suggest that nitrobenzene is a male-specific reproductive toxicant (USEPA, 2009f).

Under the *Guidelines for Carcinogen Risk Assessment* (USEPA, 2005b), nitrobenzene is classified as ''likely to be carcinogenic to humans'' by any route of exposure (USEPA, 2009f). A two-year inhalation cancer bioassay in rats and mice (Cattley et al., 1994; CIIT, 1993) reported an increase in several tumor types in both species. However, the lack of available data, including a physiologically based biokinetic or model that might predict the impact of the intestinal metabolism on serum levels of nitrobenzene and its metabolites following oral exposures, precluded the EPA's IRIS program from deriving an oral CSF (USEPA, 2009f). Additionally, a metabolite of nitrobenzene, aniline, is classified as a probable human carcinogen (B2) (USEPA, 1988).

Nitrobenzene has been shown to be non-genotoxic in most studies and was classified as, at most, weakly genotoxic in the 2009 USEPA IRIS assessment (ATSDR, 1990; USEPA, 2009f).

Of the available animal studies with oral exposure to nitrobenzene, the 90-day gavage study conducted by NTP (1983) is the most relevant study for deriving an RfD for nitrobenzene. This study used the longest exposure duration and multiple dose levels. Benchmark dose software (BMDS) (version 1.4.1c; USEPA, 2007c) was applied to estimate candidate PODs for deriving an RfD for nitrobenzene. Data for splenic congestion and increases in reticulocyte count and metHb concentration were modeled. The POD derived from the male rat increased metHb data with a benchmark response (BMR) of 1 standard deviation (SD) was selected as the basis of the RfD (see USEPA, 2009f for additional detail). Therefore, the benchmark dose level (BMDL) used as the POD is a $BMDL_{1SD}$ of 1.8 mg/kg/day.

In deriving the RfD, the EPA's IRIS program applied a composite UF of 1,000 to account for interspecies extrapolation (10), intraspecies variation (10), subchronic-to-chronic study extrapolation (3), and database deficiency (3) (USEPA, 2009f). Thus, the RfD calculated in the 2009 IRIS assessment is 0.002 mg/kg/day. The overall confidence in the RfD was medium because the critical effect is supported by the overall database and is thought to be protective of reproductive and immunological effects observed at higher doses; however, there are no chronic or multigenerational reproductive/developmental oral studies available for nitrobenzene. Because the critical effect in this study (increased metHb in the adult rat) is not specific to a sensitive subpopulation or lifestage, the general adult population was selected in deriving the HRL for regulatory determination.

The EPA calculated an HRL for the noncancer effects of nitrobenzene of 10 µg/L (rounded from 12.8 µg/L), based on the RfD of 0.002 mg/kg/day, using 2.5 L/day drinking water ingestion, 80 kg body weight, and a 20% RSC factor.

c. Statutory Criterion #2 (Occurrence at Frequency and Levels of Public Health Concern)

The EPA proposes to find that nitrobenzene does not occur with a frequency and at levels of public health concern in public water systems based on the EPA's evaluation of the following occurrence information.

The primary data for nitrobenzene are nationally-representative drinking water monitoring data generated through the EPA's UCMR 1 (USEPA, 2008b), collected from 2001 to 2003. UCMR 1 is the only dataset with nationally-representative finished water data for this contaminant. The EPA does not anticipate nitrobenzene occurrence meaningfully changing from the UCMR 1 monitoring period given that reported releases to surface water have generally decreased over time and detections of nitrobenzene in ambient waters and Six-Year Review monitoring data are at low levels. UCMR 1 collected 33,576 nitrobenzene samples from 3,861 PWSs. The contaminant was detected in only a small number of those samples (0.01%) above the HRL (10 µg/L), which is the same as the MRL (10 µg/L). The detections occurred in two large water systems (one surface water, the other groundwater); the maximum detected concentration of nitrobenzene was 100 µg/L.

Occurrence data for nitrobenzene in ambient water from the NAWQA program show that nitrobenzene was not detected in any of the samples collected under any of the three monitoring cycles. Non-NAWQA NWIS data show that nitrobenzene was detected in approximately 1% of samples (60 out of 7,265) and at approximately 1% of sites (25 out of 2,747). The median concentration among detections was 83.0 µg/L.

d. Statutory Criterion #3 (Meaningful Opportunity)

Nitrobenzene does not present a meaningful opportunity for health risk reduction for persons served by PWSs based on the estimated exposed population. UCMR 1 data indicate that the estimated population exposed to nitrobenzene above the HRL is 0.1%. As a result, the Agency finds that an NPDWR for nitrobenzene does not present a meaningful opportunity for health risk reduction.

e. Preliminary Regulatory Determination for Nitrobenzene

The Agency is making a determination to not regulate nitrobenzene with an NPDWR after evaluating health, occurrence, and other related information against the three SDWA statutory criteria. While data suggest that nitrobenzene may have an adverse effect on human health, the occurrence data indicate that nitrobenzene is not occurring or not likely to occur in PWSs with a frequency and at levels of public health concern, and regulation of such contaminant does not present a meaningful opportunity for health risk reduction for persons served by PWSs. Therefore, the Agency has determined that an NPDWR for nitrobenzene would not present a meaningful opportunity to reduce health risk for persons served by PWSs. The *Regulatory Determination 4 Support Document* (USEPA, 2019a) and the *Occurrence Data from the First Unregulated Contaminant Monitoring Regulation (UCMR 1)* (USEPA, 2008b) present additional information and analyses supporting the Agency's evaluation of nitrobenzene.

7. RDX

a. Background

RDX is a nitrated triazine and is an explosive. The name RDX is an abbreviation of ''Royal Demolition eXplosive.'' The formal chemical name is hexahydro-1,3,5-trinitro-1,3,5-triazine (USEPA, 2019a). Annual production and importation of RDX in the United States was last reported by the EPA's CDR program in 2015 to be in the range of 1–10 million pounds. It appears to have held steady in that range from 2002 onward (USEPA, 2019a).

Studies have shown that this compound is mobile in soil and therefore likely to leach into groundwater (ATSDR, 2012a). RDX is expected to have a high likelihood of partitioning to water based on its log K_{ow} and K_H. Multiple values for K_{oc}

indicate that RDX is expected to have a moderate to high likelihood of partitioning to water, while its water solubility indicates that RDX is expected to have a moderate likelihood of partitioning to water. RDX is expected to have low to moderate persistence based on modeled biodegradation rates (USEPA, 2019a).

b. Statutory Criterion #1 (Adverse Health Effects)

RDX may have adverse effects on the health of persons. Available health effects assessments include an IRIS toxicological review (USEPA, 2018e), and older assessments including an ATSDR toxicological profile (ATSDR, 2012a) and an OW assessment published in the 1992 *Drinking Water Health Advisory: Munitions* (USEPA, 1992). The EPA IRIS assessment (2018e) presents an RfD of 0.004 mg/kg/day based on convulsions as the critical effect observed in a subchronic study in F–344 rats by Crouse et al. (2006). The POD for the derivation was a $BMDL_{0.05}$ of 1.3 mg/kg/day derived using a pharmacokinetic model that identified the human equivalent dose (HED) based on arterial blood concentrations in the rats as the dose metric. A 300-fold UF (3 for extrapolation from animals to humans, 10 for interindividual differences in human susceptibility, and 10 for uncertainty in the database) was applied in determination of the RfD.

Additionally, the EPA IRIS assessment (USEPA, 2018e) classified data from the Lish et al. (1984) chronic study in $B6C3F_1$ as providing *suggestive evidence of carcinogenic potential* following the EPA (USEPA, 2005b) guidelines. The slope factor was derived from the lung and liver tumors' dose-response in the Lish et al. (1984) study. The POD for the slope factor was the $BMDL_{10}$ allometrically scaled to a HED yielding a slope factor of 0.08 per mg/kg/day.

In mice fed doses of 0 to 35 mg/kg/day for 24 months in the Lish et al. (1984) study, there were dose-dependent increases in adenomas or carcinomas of the lungs and liver in males and females (USEPA, 2018e). The formulation used contained 3 to 10% HMX, another munition ingredient. The EPA assessed the toxicity of HMX (USEPA, 1988). No chronic-duration studies were available to evaluate the carcinogenicity of HMX (USEPA, 1988). HMX is classified as Group D, or *not classifiable as to human carcinogenicity* (USEPA, 1992; USEPA, 1988). In the Levine et al. (1983) RDX dietary exposure study with Fischer 344 rats, a statistically significant increase in the incidence of hepatocellular carcinomas was observed in males but not in females (USEPA, 2018e). Although evidence of carcinogenicity included dose-dependent increases in two experimental animal species, two sexes, and two systems (liver and lungs), evidence supporting carcinogenicity in addition to the $B6C3F_1$ mouse study was not robust; this factor contributed to the *suggestive evidence of carcinogenic potential* classification. The EPA considered both the Lish et al. (1984) and Levine et al. (1983) studies to be suitable for dose-response analysis because they were well conducted, using similar study designs with large numbers of animals at multiple dose levels (USEPA, 2018e). The EPA (2018e) concluded that insufficient information was available to evaluate male reproductive toxicity from experimental animals exposed to RDX. In addition, the EPA (2018e) concluded that inadequate information was available to assess developmental effects from experimental animals exposed to RDX. The EPA selected the 2018 EPA IRIS assessment to derive two HRLs for RDX: The RfD-derived HRL (based on Crouse et al., 2006) and the oral cancer slope factor-derived HRL (based on Lish et al., 1984). The EPA has generally derived HRLs for ''possible'' or Group C carcinogens using the RfD approach in past Regulatory Determinations. However, for RDX, the EPA decided to show both an RfD-derived and oral-cancer-slope-factor-derived HRL since the mode of action for liver tumors is unknown and the 1×10^{-6} cancer risk level provides a more health protective HRL to evaluate the occurrence information.

The RfD-derived HRL for RDX was calculated using the RfD of 0.004 mg/kg/day based on a subchronic study in F–344 rats by Crouse et al. (2006) with convulsions as the critical effect (USEPA, 2018e). The point of departure for the RfD calculation was a human equivalent $BMDL_{0.05}$ of 1.3 mg/kg/day. The HED was derived using a pharmacokinetic model based on arterial blood concentrations in the rats as the dose metric. A 300-fold uncertainty factor (3 for extrapolation from animals to humans, 10 for interindividual differences in human susceptibility, and 10 for uncertainty in the database) was applied in determination of the RfD. The EPA calculated a RfD-derived HRL of 30 μg/L (rounded from 25.6 μg/L), for the noncancer effects of RDX based on the RfD of 0.004 mg/kg/day, using 2.5 L/day drinking water ingestion, 80 kg body weight, and a 20% RSC factor.

The oral-cancer-slope-factor-derived HRL for RDX was also based on values presented in the 2018 EPA IRIS assessment. The slope factor is derived from the dose-response for lung and liver tumors in the Lish et al. (1984) study, with elimination of the data for the high dose group due to high mortality. The point of departure for the slope factor of 0.08 $(mg/kg/day)^{-1}$ was the $BMDL_{10}$ which was allometrically scaled to a HED. The EPA calculated an oral cancer slope factor-derived HRL of 0.4 μg/L for RDX based on the cancer slope factor of 0.08 $(mg/kg/day)^{-1}$, using 2.5 L/day drinking water ingestion, 80 kg body weight, and a 1 in a million cancer risk level.

The EPA's (USEPA, 2018e) derivation of an oral slope factor for cancer is in accordance with the *Guidelines for Carcinogen Risk Assessment* (USEPA, 2005b) while RDX is classified as having ''suggestive evidence of carcinogenic potential.'' Specifically, the guidelines state ''when the evidence includes a well-conducted study, quantitative analyses may be useful for some purposes, for example, providing a sense of the magnitude and uncertainty of potential risks, ranking potential hazards, or setting research priorities'' (USEPA, 2005b). The EPA IRIS assessment concluded that the database for RDX contains well-conducted carcinogenicity studies (Lish et al., 1984; Levine et al., 1983) suitable for dose response and that the quantitative analysis may be useful for providing a sense of the magnitude and uncertainty of potential carcinogenic risk (USEPA, 2018e). Therefore, the EPA felt it was important to evaluate the occurrence information against both the RfD-derived HRL and the oral cancer slope factor-derived HRL.

c. Statutory Criterion #2 (Occurrence at Frequency and Levels of Public Health Concern)

The EPA proposes to find that RDX does not occur with a frequency and at levels of public health concern in public water systems based on the EPA's evaluation of the following occurrence information.

The primary data for RDX are nationally-representative drinking water monitoring data generated through the EPA's UCMR 2 a.m., collected from 2008 to 2010 (USEPA, 2015a). UCMR 2 is the only dataset with nationally-representative finished water data for this contaminant. Under UCMR 2, 32,150 RDX samples were collected from 4,139 PWSs. The contaminant was detected in only a small number of samples (0.01%) at or above the MRL (1 μg/L), which is about 2.5 times higher than the oral cancer slope factor-derived HRL (0.4 μg/L). The detections occurred

in three large surface water systems; the maximum detected concentration of RDX was 1.1 µg/L and the median detected value was 1.07 µg/L.

Occurrence data for RDX in ambient water are not available from the NAWQA program; however, non-NAWQA data are available from NWIS. The NWIS data show that RDX was detected in approximately 46% of samples (517 out of 1,115 samples) and at approximately 29% of sites (43 out of 147 sites). The median concentration based on detections was 26.0 µg/L (the 99th percentile was 120 µg/L and the maximum value was 310 µg/L). While the NWIS data show that ambient waters contain detectable levels of RDX, the nationally-representative drinking water monitoring data indicate that only a small number of samples are at or above the MRL; Section III.a.3 notes that ambient water data are a less important factor in making a regulatory determination.

d. Statutory Criterion #3 (Meaningful Opportunity)

RDX does not present a meaningful opportunity for health risk reduction for persons served by PWSs based on the estimated exposed population, including sensitive populations. UCMR 2 findings indicate that the estimated population exposed to RDX at or above the MRL is 0.04%. As a result, the Agency finds that an NPDWR for RDX does not present a meaningful opportunity for health risk reduction. Based on the small number of samples measured at or marginally above the MRL, the EPA does not believe that there would be enough occurrence in the narrow range between the HRL and the MRL to change our meaningful opportunity determination.

e. Preliminary Regulatory Determination for RDX

The Agency is making a preliminary determination to not regulate RDX with an NPDWR after evaluating health, occurrence, and other related information against the three SDWA statutory criteria. While data suggest that RDX may have an adverse effect on human health, the occurrence data indicate that RDX is not occurring or not likely to occur in PWSs with a frequency and at levels of public health concern. Therefore, the Agency has determined that an NPDWR for RDX would not present a meaningful opportunity to reduce health risk for persons served by PWSs. The *Regulatory Determination 4 Support Document* (USEPA, 2019a) and the *Occurrence Data from the Second Unregulated Contaminant Monitoring Regulation (UCMR 2)* (USEPA, 2015a) present additional information and analyses supporting the Agency's evaluation of RDX.

V. Status of the Agency's Evaluation of Strontium, 1,4-Dioxane, and 1,2,3-Trichloropropane

A. Strontium

Strontium is an alkaline earth metal. On October 20, 2014 the Agency published its preliminary regulatory determination to regulate strontium and requested public comment on the determination and supporting technical information (USEPA, 2014a). Informed by the public comments received, rather than making a final determination for strontium in 2016, the EPA delayed the final determination to consider additional data, and to decide whether there is a meaningful opportunity for health risk reduction by regulating strontium in drinking water (USEPA, 2016a). Specifically, the notification on the delayed final determination mentioned that the EPA would evaluate additional studies on strontium exposure and health studies related to strontium exposure. Since 2016, the EPA has worked to identify and evaluate published studies on health effects associated with strontium exposure, sources of exposure to strontium, and treatment technologies to remove strontium from drinking water. In this document, the EPA is clarifying that it is continuing with its previous 2016 decision (USEPA, 2016a) to delay a final determination for strontium in order to further consider additional studies related to strontium exposure.

With the preliminary regulatory determination in 2014, the EPA published a peer-reviewed HESD for strontium (USEPA, 2014c) and an HRL of 1,500 µg/L. That document addresses exposure from drinking water and other media, toxicokinetics, hazard identification, and dose-response assessment, and provides an overall characterization of the risk from drinking water containing strontium.

The chemical similarity of strontium to calcium allows it to exchange for calcium in a variety of biological processes, which could result in detrimental health effects. The most important of these processes is the substitution of calcium in bone, affecting skeletal development. Because the mode of action for this adverse effect is strontium uptake into bone, the toxicity of strontium depends on an individual's stage of bone development and their intake of nutrients related to bone formation, such as calcium, magnesium, phosphorous and Vitamin D. Infants, children and adolescents with low dietary intakes of bone forming nutrients are among the most vulnerable to exposures to high levels of strontium during periods of bone growth (USEPA, 2014c). Women who are pregnant or lactating may also be sensitive to strontium due to their increased requirement for bone-forming nutrients and increased rates of bone remodeling. Breast-fed infants (from exposure to lactating mothers who have an increased water intake), formula-fed infants (who will ingest a greater volume of contaminated water), and the developing fetus (from exposure to pregnant women who have an increased water intake) are other susceptible subpopulations. In these populations and lifestages, susceptibility is enhanced by a combination of high exposure and lifestage.

Toxicity studies indicate that strontium can decrease the calcification of the cartilaginous portion of bone. The results of animal studies show that the effects of strontium at doses from 400–500 mg Sr/kg/day include small changes in bone structure and inhibition of calcification, consistent with early development of osteomalacia and/or ''strontium rickets.'' Decreased levels of osteoclasts and associated decreases in bone resorption can also occur at these doses in animals. Higher doses of strontium can result in more severe bone effects including reduced growth, large areas of unmineralized bone, bone softening (''strontium rickets'' in young animals, and osteomalacia in adults), excess growth of epiphyseal cartilage, and abnormal deposition of osteoid in the metaphyses (USEPA, 2014c). More recent information on strontium toxicity is now available in the peer reviewed literature. The EPA intends to do an updated literature search and systematic review before finalizing the assessment.

The primary finished drinking water occurrence data for strontium are recent (2013–2015) nationally-representative drinking water monitoring data generated through the EPA's UCMR 3. Under the UCMR 3, 62,913 samples were analyzed for strontium; 2.8% of those samples were found at concentrations greater than the HRL (potentially subject to change following examination of health studies), and 99.8% of the samples were found at concentrations greater than the MRL (0.3 µg/L). In addition, approximately 5.8% of the PWSs had at least one detection greater than the HRL, corresponding to 6.2% of the U.S. population.

The EPA evaluated several treatment-related studies concerning strontium's removal from drinking water. A full-

scale evaluation of strontium removal from groundwater sources at four lime softening and four ion exchange softening plants in Ohio was reported by Lytle et al. (2017). Raw waters contained between 13 and 28 mg/L, and 1.2 and 15 mg/L strontium at the ion exchange and lime softening plants, respectively. Ion exchange effectively removed nearly all of the strontium, although under typical operation, treated strontium levels were dictated by the percentage of water that by-passed the ion exchange vessels. The amount of strontium that was removed by lime softening ranged between 49 and 94% on average (or to final levels of between 0.2 and 3.6 mg/L) likely dependent on treatment and water quality conditions.

O'Donnell et al. (2016) evaluated the effectiveness of conventional treatment (*i.e.,* coagulation/filtration) and lime-soda ash softening treatment methods to remove strontium from drinking water. The results indicated that coagulation/filtration was ineffective at removing strontium (6–12% removal) and lime-soda ash softening was more effective, with removal percentages as high as 78%. Additionally, the authors noted that the removal of strontium using lime-soda ash softening in all of the softening jar tests was directly associated with substantial calcium removal, typically at higher rates compared to the removal of strontium.

Najm (2016) reviewed available literature for the removal of naturally occurring stable strontium or anthropogenically produced radioactive strontium from drinking water. The main conclusion was that precipitative softening (*i.e.,* lime-soda ash softening) and cation-exchange are the most feasible options. Additionally, the report highlights that chemical precipitation is targeted for the removal of calcium or magnesium and it is unknown if targeted removal of strontium can be achieved. Likewise, partial removal of calcium is unavoidable with cation exchange, even in a process targeted for strontium removal.

While the EPA determined in 2014 that strontium may have adverse effects on the health of persons including children, the Agency continues to consider additional data, consult existing assessments (such as ATSDR's Toxicological Profile from 2004 and Health Canada's Drinking Water Guideline from 2018), and evaluate whether there is a meaningful opportunity for health risk reduction by regulating strontium in drinking water. Additionally, the EPA understands that strontium may co-occur with beneficial calcium in some drinking water systems and treatment technologies that remove strontium may also remove calcium. The agency is evaluating the effectiveness of treatment technologies under different water conditions, including calcium concentrations.

B. 1,4-Dioxane

The EPA is not making a preliminary determination for 1,4-dioxane at this time as the Agency has not determined whether there is a meaningful opportunity for public health risk reduction. As discussed in Section II.B.1 of this document, the EPA considers three statutory criteria mandated under SDWA Section 1412(b)(1)(A) in making a decision to regulate a contaminant. The EPA summarizes the current status of its evaluation of 1,4-dioxane below. The EPA will continue to evaluate 1,4-dioxane in the context of all three statutory criteria prior to making such a proposal as part of a future regulatory determination.

1,4-Dioxane is used as a solvent in cellulose formulations, resins, oils, waxes, and other organic substances; also used in wood pulping, textile processing, degreasing; in lacquers, paints, varnishes, and stains; and in paint and varnish removers.

Health effects information for 1,4-dioxane are available from several sources including EPA IRIS (USEPA, 2010b), ATSDR (2012b), and WHO (2005). The EPA's IRIS assessment (USEPA, 2010b) shows critical effects for both noncancer (liver, kidney, and nasal toxicity) and cancer (hepatocellular adenoma and carcinoma) endpoints.

The EPA's IRIS identified an oral reference dose (RfD) for 1,4-dioxane of 0.03 mg/kg/day based on the Kociba (1974) 2-year rat feeding study in which hepatic and renal toxicity in male rats were identified as critical effects (Kociba, 1974; USEPA, 2010b; USEPA, 2013). The LOAEL of 94 mg/kg/day was based on hepatocellular degeneration and necrosis as well as renal tubule epithelial cell degenerative changes and necrosis in male Sherman rats, with a NOAEL of 9.6 mg/kg/day. A composite UF of 300 was applied to the RfD to account for pharmacokinetic and pharmacodynamic differences between rats and humans (10); interindividual variability (10); and database deficiencies (3) (USEPA, 2010b; USEPA, 2013).

In 2013, the EPA IRIS classified 1,4-dioxane as ''likely to be carcinogenic to humans'' in accordance with the EPA's 2005 *Guidelines for Carcinogenic Risk Assessment,* based on evidence of carcinogenicity in two-year studies performed with three strains of rats, two strains of mice, and guinea pigs. The MOA by which 1,4-dioxane induces tumors in animal models is not conclusive, so a linear low dose extrapolation was used to estimate human carcinogenic risk (USEPA, 2013).

For the HRL derivation, the EPA selected the oral cancer slope factor of 0.10 $(mg/kg/day)^{-1}$ for 1,4-dioxane derived by the EPA IRIS for hepatocellular adenomas or carcinomas in female mice (2013). The principal study selected for the derivation of an oral cancer slope factor was Kano et al., 2009.[26] The oral cancer slope factor was derived using linear extrapolation from the point of departure (POD) (*i.e.,* the 95% lower confidence limit on the dose associated with a benchmark response near the lower end of the observed data) calculated by fitting a curve to the experimental dose-response data using log-logistic benchmark dose modeling. The EPA (USEPA, 2013) indicated that a multistage model did not provide an adequate fit because of the steep rise in the dose-response curve from the low-dose to the mid-dose followed by a plateau between the mid- and high-dose groups for the hepatocellular adenoma or carcinoma incidence data in the female mice (USEPA, 2013). The EPA performed a comparison of benchmark dose (BMD) and benchmark dose limit (BMDL) estimates derived for studies of rats and mice and found that female mice are more sensitive to 1,4-dioxane induced liver carcinogenicity than other species or types of tumors (USEPA, 2013). The EPA therefore derived an oral cancer slope factor of 0.10 $(mg/kg/day)^{-1}$ for 1,4-dioxane using the BMDL HED for hepatocellular adenomas or carcinomas in female mice with a benchmark response of 50% as the POD (USEPA, 2013). The EPA calculated an HRL for 1,4-dioxane of 0.32 µg/L based on the cancer slope factor of 0.1 $(mg/kg/day)^{-1}$, using 2.5 L/day drinking water ingestion, 80 kg body weight, and a 1 in a million cancer risk level. The EPA recently released a draft risk evaluation for 1,4-dioxane (USEPA, 2019f) that includes an oral slope factor different than that provided by IRIS (USEPA, 2010b). Additionally, Health Canada released a guideline technical document for 1,4-dioxane for public consultation in 2018 (Health Canada, 2018). The consultation period ended November 9, 2018 and a final publication is pending.

[26] Note that the study results for the two-year drinking water study have been reported in multiple publications and/or communications (Kano et al., 2009; Yamazaki et al., 1994; JBRC, 1998; and Yamazaki, 2006).

Once completed, the EPA will consider whether either the newer EPA oral slope factor or Canadian guideline technical document is appropriate to inform a regulatory determination.

The primary occurrence data for 1,4-dioxane are recent (2013–2015) nationally-representative drinking water monitoring data generated through the EPA's UCMR 3. Under the UCMR 3, 36,810 samples were analyzed for 1,4-dioxane; 3.4% of those samples were found at concentrations greater than the HRL, and 11.4% of the samples were found at concentrations greater than the MRL (0.07 µg/L). In addition, approximately 7.8% of the PWSs had at least one detection greater than the HRL.

While the health effects data suggest that 1,4-dioxane may have an adverse effect on human health and the occurrence data indicate that 1,4-dioxane is occurring in finished drinking water above the HRL, the EPA continues to evaluate whether there is a meaningful opportunity to reduce health risk for persons served by PWSs by establishing an NPDWR for 1,4-dioxane. Based on UCMR 3 data, the EPA derived a national estimate of less than two baseline cancer cases per year attributable to 1,4-dioxane in drinking water. The EPA derived this estimate by using the CSF from the IRIS assessment (USEPA, 2013), a national extrapolation of UCMR 3 population-weighted mean exposure data, and the assumption that all UCMR 3 non-detect samples were equivalent to the MRL (0.07 µg/L), which was intended to result in a high-end estimate of the number of national cancer cases. However, while the number of baseline cancer cases is relatively low, other adverse health effects following exposure to 1,4-dioxane may also contribute to potential risk to public health, and these analyses have not yet been completed.

As the EPA evaluates whether there is a meaningful opportunity to protect public health by establishing a national-level drinking water regulation for 1,4-dioxane, the Agency recognizes that several states have ongoing activities relevant to control of 1,4-dioxane in PWSs. For example, New York State has a recommended MCL of 1.0 µg/L,[27] and California has a notification level of 1 µg/L.[28] Based on UCMR 3 data, 38% of systems where system averages of 1,4-dioxane were greater than the HRL are in California and New York.

The Agency is not making a preliminary determination for 1,4-dioxane at this time as the Agency has not determined whether there is a meaningful opportunity for public health risk reduction. The Agency intends to complete its new risk evaluation for 1,4-dioxane that is currently in draft (USEPA, 2019f) and consider it and the Canadian guideline technical document and other relevant new science prior to making a regulatory determination. This evaluation may provide clarity as to whether there is a meaningful opportunity for an NPDWR to reduce public health risk. The *Regulatory Determination 4 Support Document* (USEPA, 2019a) and the *Occurrence Data from the Third Unregulated Contaminant Monitoring Rule (UCMR 3)* (USEPA, 2019b) present additional information and analyses supporting the Agency's evaluation of 1,4-dioxane.

C. 1,2,3-Trichloropropane

1,2,3-Trichloropropane is a man-made chemical used as an industrial solvent, cleaning and degreasing agent, and synthesis intermediate. Due to analytical method-based limitations, the EPA is not making a preliminary determination on 1,2,3-trichloropropane at this time.

Health effects information for 1,2,3-trichloropropane is available from EPA IRIS (USEPA, 2009g), EPA OW (USEPA, 1989b), ATSDR (1992b; 2011), and California OEHHA (2009). The most recent health assessment is the EPA's IRIS assessment (USEPA, 2009g), which uses an NTP study (NTP, 1993) to derive both an RfD of 0.004 mg/kg/day for noncancer effects and a CSF of 30 (mg/kg/day)$^{-1}$. The NTP (1993) chronic duration oral bioassay gavage study of rats and mice shows critical effects for both noncancer (increased liver weight) and cancer endpoints (alimentary system squamous cell neoplasms, liver hepatocellular adenomas or carcinomas, Harderian gland adenoma, uterine/cervix adenomas or carcinomas) for oral exposure. 1,2,3-Trichloropropane received a classification of ''likely to be carcinogenic to humans'' based on statistically significant increases in multiple tumors types in rats and mice.

The HRL for the cancer effects is based on the EPA IRIS cancer slope factor for 1,2,3-trichloropropane of 30 (mg/kg/day)$^{-1}$ (USEPA, 2009g). The oral cancer slope factor was calculated for adult exposures and does not take into account presumed early-life susceptibility to 1,2,3-trichloropropane exposure. As outlined in the IRIS assessment, the evidence indicates that 1,2,3-trichloropropane carcinogenicity occurs via a mutagenic MOA. The EPA provides guidance on assessing early life carcinogen exposure (USEPA, 2005b; USEPA, 2005c), and children potentially exposed to mutagenic carcinogens can be assumed to have the potential for increased early-life susceptibility to carcinogens. Therefore, for mutagenic carcinogens, the EPA recommends that risk assessors apply special adjustment factors to a given cancer slope factor which are dependent on age (ADAFs). Section 5.4.5 of the IRIS assessment for 1,2,3-trichloropropane describes application of the ADAFs to the CSF. The EPA recommends the application of these ADAFs when estimating cancer risks from early life (<16 years of age) exposure to 1,2,3-trichloropropane (USEPA, 2009g). Thus, the EPA calculated an HRL of 0.0004 µg/L (0.4 ng/L) using ADAFs and a cancer risk level of one cancer case per million people.

The primary occurrence data for 1,2,3-trichloropropane are nationally-representative drinking water monitoring data generated through the EPA's UCMR 3 (2013–2015). Under the UCMR 3, an MRL of 0.03 µg/L was identified for the method used to analyze that contaminant (EPA Method 524.3).[29] For the 36,848 samples collected during UCMR 3, 0.69% of the samples exceeded the MRL. Further, about 1.4% of PWSs had at least one detection over the MRL, corresponding to 2.5% of the population.

While the UCMR 3 data indicated 1,2,3-trichloropropane occurrence was relatively low at concentrations above the MRL, the MRL (0.03 µg/L) is more than 75 times the HRL (0.0004 µg/L) for 1,2,3-trichloropropane. This discrepancy allows for a broad range of potential contaminant concentrations that could be in exceedance of the HRL but below the MRL. Thus, the EPA needs additional lower-level occurrence information prior to making a preliminary regulatory determination

[27] In December 2018, the New York State Departments of Health and Environmental Conservation announced that the New York State Drinking Water Quality Council has recommended that the Department of Health ''adopt an MCL for 1,4-dioxane of 1.0 part per billion'' (*i.e.,* 1.0 µg/L). New York State approved Advanced Oxidative Process (AOP) as an effective treatment technology for 1,4-dioxane.

[28] The California drinking water notification level for 1,4-dioxane is 1 µg/L. The response level, the level at which the source is removed from service, is 35 µg/L. The notification level is slightly greater than the de minimis (1 X 10E–6) level commonly used for notification levels based on cancer risk, reflecting difficulty in monitoring 1,4-dioxane at very low concentrations.

[29] Under UCMR 3, the MRL for an analyte, as determined by a specified analytical method, is a reporting threshold set at a level at which quantitation is achievable, with 95% confidence, by a capable analyst/laboratory at least 75% of the time when using the specified analytical method. This simultaneously accounts for both precision and accuracy.

for 1,2,3-trichloropropane. The *Regulatory Determination 4 Support Document* (USEPA, 2019a) and the *Occurrence Data from the Third Unregulated Contaminant Monitoring Rule (UCMR 3)* (USEPA, 2019b) present additional information and analyses supporting the Agency's evaluation of 1,2,3-trichloropropane.

VI. EPA's Request for Comments and Next Steps

The EPA invites commenters to submit any relevant data or information pertaining to the preliminary regulatory determinations identified in this document, as well as other relevant comments. The EPA will consider the public comments and/or any new, relevant data submitted for the contaminants discussed in this document and in the supporting rationale.

The data and information requested by the EPA include peer-reviewed science and supporting studies conducted in accordance with sound and objective scientific practices, and data collected by accepted methods or best available methods (if the reliability of the method and the nature of the review justifies use of the data).

Peer-reviewed data are studies/analyses that have been reviewed by qualified individuals (or organizations) who are independent of those who performed the work, but who are collectively equivalent in technical expertise (*i.e.,* peers) to those who performed the original work. A peer review is an in-depth assessment of the assumptions, calculations, extrapolations, alternate interpretations, methodology, acceptance criteria, and conclusions pertaining to the specific major scientific and/or technical work products and the documentation that supports them (USEPA, 2015b).

Specifically, the EPA is requesting comment and/or information related to the following aspects:

- The health effects information considered by the Agency in making the preliminary determinations described in this document. The EPA requests commenters identify any additional peer reviewed studies that could inform the final regulatory determination.
- Drinking water occurrence information considered by the Agency in making the preliminary determinations described in this document. The EPA requests commenters identify any additional data and studies upon the occurrence of these contaminants in drinking water.
- The EPA requests comment on what additional information the Agency should consider in developing a NPDWR for PFOA and PFOS beyond the information described in this document. The EPA notes that ongoing evaluations of PFOA and PFOS health effects include the National Toxicology Program's Technical Report on the Toxicology and Carcinogenesis Studies of PFOA, ATSDR toxicity assessments, as well as state health assessments.
- The EPA requests comment upon potential regulatory constructs, grouping approaches, and potential monitoring requirements described in Sections III.A.1. and IV.B.1.f of this document.
- The EPA requests additional studies and data that characterizes the occurrence of PFAS in drinking water. The Agency is particularly interested in datasets that include:
  - Information on the sample data that includes: Location and sample type (raw or treated water; groundwater or surface water source);
  - Information on the measurement results that includes: Specific analyte, analytical method used; measurement results; units and qualifiers; detection limit values (for non-detects);
  - Sample collection dates for a given sample and analysis dates for each analytical result;
  - Meta data that could include the organization that created the dataset; contact information; the purpose of the data collection; the size of the dataset; and indication of data quality (such as a quality assurance project plan); and
  - An accompanying data dictionary and reference to Quality Assurance processes for sample collection and analysis information.
- The EPA requests peer reviewed health effects studies for PFAS other than PFOA and PFOS that the Agency could consider in future regulatory decision making.
- Specific information about removal of PFOA, PFOS, and other PFAS from drinking water under field conditions, including information about effectiveness and costs of various treatment approaches and effectiveness of PFAS removal in the presence of other contaminants and constituents.

The EPA intends to carefully evaluate the public comments received on the eight preliminary determinations and issue its final regulatory determinations. If the Agency makes a final determination to regulate any of the contaminants, the EPA intends to propose an NPDWR within 24 months and promulgate a final NPDWR within 18 months following the proposal.[30] In addition, the EPA will also consider information provided about the three contaminants discussed in Section V to inform potential future regulatory determinations.

[30] The statute authorizes a nine-month extension of this promulgation date.

VII. References

Ahmed, F.E. and J.C. Seely. 1983. Acetochlor: Chronic Feeding Toxicity and Oncogenicity Study in the Rat. Pharmacopathics Research Laboratories, Inc., Laurel, MD. Study No. PR–80–006. May 20, 1983. Unpublished report (as cited in USEPA, 2006c).

Ahmed, F.E., A.S. Tegeris, and J.C. Seely. 1983. MON 097: 24-Month Oncogenicity Study in the Mouse. Pharmacopathics Research Laboratories, Inc., Laurel, MD. Report No. PR–80–007. May 4, 1983. Unpublished report (as cited in USEPA, 2006c).

Amyes, S.J. 1989. SC–5676: 78 Week Feeding Study in CD–1 Mice. Life Science Research Ltd., Suffolk, England. Study No. 87/SUC0012/0702. June 9, 1989. Unpublished report (as cited in USEPA, 2006c).

Association of State Drinking Water Administrators (ASDWA). 2019. Per- and Polyfluoroalkyl Substances (PFAS) State Drinking Water Program Challenges. *https://www.asdwa.org/pfas/.* Web page copyright 2019.

Agency for Toxic Substances and Disease Registry (ATSDR). 1990. *Toxicological Profile for Nitrobenzene.* U.S. Department of Health and Human Services, Public Health Service. Available on the internet at: *https://www.atsdr.cdc.gov/toxprofiles/tp.asp?id=532&tid=95.*

ATSDR. 1992a. *Toxicological Profile for Bromomethane.* U.S. Department of Health and Human Services, Public Health Service.

ATSDR. 1992b. *Toxicology Profile for 1,2,3-Trichloropropane.* U.S. Department of Health and Human Services, Public Health Service. September.

ATSDR. 2011. *Addendum to the Toxicology Profile for 1,2,3-Trichloropropane.* U.S. Department of Health and Human Services, Agency for Toxic Substances and Disease Registry. August.

ATSDR. 2012a. *Toxicological Profile for RDX.* U.S. Department of Health and Human Services, Public Health Service. Available on the internet at: *http://www.atsdr.cdc.gov/ToxProfiles/tp.asp?id=412&tid=72.*

ATSDR. 2012b. *Toxicological Profile for 1,4-Dioxane.* U.S. Department of Health and Human Services, Public Health Service. Available on the internet at: *https://www.atsdr.cdc.gov/toxprofiles/tp187.pdf.*

ATSDR. 2015. *Toxicological Profile for 1,1-Dichloroethane.* U.S. Department of Health and Human Services, Public Health Service. Available on the internet at: *https://www.atsdr.cdc.gov/ToxProfiles/tp133.pdf.*

ATSDR. 2018. *Toxicological Profile for Perfluoroalkyls.* Draft for Public Comment. U.S. Department of Health and Human Services, Public Health Service. Available on the internet at:

http://www.atsdr.cdc.gov/ToxProfiles/tp200.pdf.

ATSDR. 2019a. PFAS Exposure Assessments. U.S. Department of Human Services. Available on the internet at: *https://www.atsdr.cdc.gov/pfas/PFAS-Exposure-Assessments.html.*

Barry, K.H., S. Koutros, J. Lupin, H.B. Coble, F. Barone-Adesi, L.E. Beane Freeman, D.P. Sandler, J.A. Hoppin, X. Ma, T. Zheng, and M.C.R. Alavanja. 2012. Methyl bromide exposure and cancer risk in the Agricultural Health Study. *Cancer Causes Control* 23:807–818.

Blomquist, J.D., J.M. Denis, J.L. Cowles, J.A. Hetrick, R.D. Jones, and N.B. Birchfield. 2001. *Pesticides in Selected Water-Supply Reservoirs and Finished Drinking Water, 1999–2000: Summary of Results from a Pilot Monitoring Program.* U.S. Geological Survey Open-File Report 01–456. 65 pp. Available on the internet at: *https://pubs.er.usgs.gov/publication/ofr01456.*

Bond, J.A., J.P. Chism, D.E. Rickert, et al. 1981. Induction of hepatic and testicular lesions in Fischer 344 rats by single oral doses of nitrobenzene. *Fundam Appl Toxicol* 1:389–394 (as cited in USEPA, 2009f).

Boorman, G.A., H.L. Hong, C.W. Jameson, et al. 1986. Regression of methyl bromide induced forestomach lesions in the rat. *Toxicol Appl Pharmacol* 86:131–139.

Brendel, S., E. Fetter, C. Staude, L. Vierke, and A. Biegel-Engler. 2018. Short-chain perfluoroalkyl acids: Environmental concerns and a regulatory strategy under REACH. Environmental *Sciences Europe* 30(1):9.

Breslin, W.J., C.L. Zublotny, G.J. Bradley, et al. 1990. Methyl bromide inhalation teratology study in New Zealand white rabbits with cover letter and attachment (declassified). Dow Chemical Company. Submitted to the U.S. Environmental Protection Agency under TSCA Section 8E. OTS0522340–3 (as cited in ATSDR, 1992a).

Butenhoff, J.L., G.L. Kennedy, Jr., S.-C. Chang, and G.W. Olsen. 2012. Chronic dietary toxicity and carcinogenicity study with ammonium perfluorooctanoate in Sprague-Dawley rats. *Toxicol* 298:1–13 (as cited in USEPA, 2016g).

Calafat, A.M., L-Y Wong, Z. Kuklenyik, J.A. Reidy, and L.L. Needham. 2007. Polyfluoroalkyl Chemicals in the U.S. Population: Data from the National Health and Nutrition Examination Survey (NHANES) 2003–2004 and Comparisons with NHANES 1999–2000. *Environ Health Perspect* 115(11):1596–1602.

Calafat, A.M., K. Kato, K. Hubbard, et al. 2019. Legacy and alternative per and polyfluoroalkyl substances in the U.S. general population: Paired serum-urine data from the 2013–2014 National Health and Nutrition Examination Survey, *Environment International* 131:105048.

California Environmental Protection Agency (CalEPA). 2003. 1,1-Dichloroethane in Drinking Water. Public Health Goals for Chemicals in Drinking Water. Office of Environmental Health Hazard Assessment (OEHHA), Pesticide and Environmental Toxicology Section. September 2003. *http://www.oehha.ca.gov/water/phg/pdf/Ph411DCA92603.pdf.*

California Office of Environmental Health Hazard Assessment (California OEHHA). 2009. Final Public Health Goal for 1,2,3-Trichloropropane in Drinking Water. August 20. Available on the internet at: *https://oehha.ca.gov/water/public-health-goal/final-public-health-goal-123-trichloropropane-drinking-water.*

California Office of Environmental Health Hazard Assessment (California OEHHA). 2019. Perfluorooctanoic Acid (PFOA) and Perfluorooctane Sulfonate (PFOS) in Drinking Water. Available on the internet at: *https://oehha.ca.gov/water/notification-level-report/perfluorooctanoic-acid-pfoa-and-perfluorooctane-sulfonate-pfos.*

Cattley, R.C., J.I. Everitt, E.A. Gross, et al. 1994. Carcinogenicity and toxicity of inhaled nitrobenzene in B6C3F1 mice and F344 and CD rats. *Fundam Appl Toxicol* 22:328–340 (as cited in USEPA, 2009f).

CDC. 2019. *Fourth National Report on Human Exposure to Environmental Chemicals, Updated Tables, January 2019, Volume 1.* Department of Health and Human Services, Centers for Disease Control and Prevention. Available on the internet at: *https://www.cdc.gov/exposurereport/pdf/FourthReport_UpdatedTables_Volume1_Jan2019-508.pdf.*

Colorado Department of Public Health and Environment (CDPHE). 2018. Perfluorinated compound levels in environmental water samples. Updated August 7, 2018. Available on the internet at: *https://environmentalrecords.colorado.gov/HPRMWebDrawer/RecordView/1208017.*

Chemical Industry Institute of Toxicology (CIIT). 1993. Initial submission: a chronic inhalation toxicity study of nitrobenzene in B6C3F1 mice, Fischer 344 rats and Sprague-Dawley (CD) rats. Chemical Industry Institute of Toxicology. Research Triangle Park, NC. EPA Document No. FYI–OTS–0794–0970; NTIS No. OTS0000970 (as cited in USEPA, 2009f).

Commonwealth of Massachusetts. 2019. Per- and Polyfluoroalkyl Substances (PFAS). Available on the internet at: *https://www.mass.gov/info-details/per-and-polyfluoroalkyl-substances-pfas.*

Crone, B.C., T.F. Speth, D.G. Wahman, S.J. Smith, G. Abulikemu, E.J. Kleiner, and J.G. Pressman. 2019. Occurrence of per- and polyfluoroalkyl substances (PFAS) in source water and their treatment in drinking water. *Critical Reviews in Environmental Science and Technology* 49(24): 2359–2396.

Crouse, L.C.B., M.W. Michie, M. Major, M.S. Johnson, R.B. Lee, and H.I. Paulus. 2006. Subchronic oral toxicity of RDX in rats. (Toxicology Study No. 85–XC–5131–03). Aberdeen Proving Ground, MD: U.S. Army Center for Health Promotion and Preventive Medicine.

Danse, L.H., F.L. van Velsen, and C.A. Van Der Heljden. 1984. Methylbromide: Carcinogenic effects in the rat forestomach. *Toxicol Appl Pharmacol* 72:262–271 (as cited in ATSDR, 1992a).

Delzer, G.C. and T. Ivahnenko. 2003. *Occurrence and Temporal Variability of Methyl tert-Butyl Ether (MTBE) and Other Volatile Organic Compounds in Select Sources of Drinking Water: Results of the Focused Survey.* U.S. Geological Survey Water-Resources Investigations Report 02–4084. 65 pp. Available on the internet at: *http://sd.water.usgs.gov/nawqa/pubs/wrir/wrir02_4084.pdf.*

DeSimone, L.A. 2009. *Quality of Water from Domestic Wells in Principal Aquifers of the United States, 1991–2004.* U.S. Geological Survey Scientific Investigations Report 2008–5227. 139 pp. Available on the internet at: *http://pubs.usgs.gov/sir/2008/5227/.*

DeSimone, L.A., P.B. McMahon, and M.R. Rosen. 2014. *The Quality of Our Nation's Waters—Water Quality in Principal Aquifers of the United States, 1991–2010.* U.S. Geological Survey Circular 1360, 151 p. Available on the internet at: *http://pubs.usgs.gov/circ/1360/.*

Dickenson, E.R.V. and C. Higgins. 2016. *Treatment Mitigation Strategies for Poly- and Perfluoroalkyl Substances.* Web Report #4322. Water Research Foundation. Denver, CO.

Dreyer, A., V. Matthias, I. Weinberg, and R. Ebinghaus. 2010. Wet Deposition of Poly- and Perfluorinated Compounds in Northern Germany. *Environmental Pollution* 158(5): 1221–27. Available on the internet at: *https://doi.org/10.1016/j.envpol.2010.01.030.*

Enloe, P.V., C.M. Salamon, and S.V. Becker. 1986. Two-generation reproduction study via inhalation in albino rats using methyl bromide. American Biogenics Corp. Submitted to the U.S. Environmental Protection Agency under TSCA Section 8d. OTS0515364. EPA Doc. ID 86–870000926 (as cited in ATSDR, 1992a).

Eustis, S.L., S.B. Haber, R.T. Drew, et al. 1988. Toxicology and pathology of methyl bromide in F344 rats and B6C3F1 mice following repeated inhalation exposure. *Fundam Appl Toxicol* 11:594–610 (as cited in ATSDR, 1992a).

Gansewendt, B., U. Foest, D. Xu et al. 1991. Formation of DNA adducts in F–344 rats after oral administration or inhalation of [14C] methyl bromide. *Food Chem. Toxicol* 29:557–563.

Gilliom, R.J., J.E. Barbash, C.G. Crawford, P.A. Hamilton, J.D. Martin, N. Nakagaki, L.H. Nowell, J.C. Scott, P.E. Stackelberg, G.P. Thelin, and D.M. Wolock. 2007. *The Quality of Our Nation's Waters—Pesticides in the Nation's Streams and Groundwater, 1992–2001.* Appendix 7. Statistical Summaries of Water-Quality Data. U.S. Geological Survey Circular 1291. 172 pp. Available on the internet at: *http://water.usgs.gov/nawqa/pnsp/pubs/circ1291/appendix7/.*

Glassmeyer, S.T., E.T. Furlong, D.W. Kolpin, A.L. Batt, R. Benson, J.S. Boone, O. Conerly, M.J. Donohue, D.N. King, M.S.

Kostich, H.E. Mash, S.L. Pfaller, K.M. Schenck, J.E. Simmons, E.A. Varughese, S.J. Vesper, E.N. Villegas, and V.S. Wilson. 2017. Nationwide Reconnaissance of Contaminants of Emerging Concern in Source and Treated Drinking Waters of the United States. *Science of the Total Environment* 581–582 (1 March 2017): 909–922.

Grady, S.J. and G.D. Casey. 2001. *Occurrence and Distribution of Methyl tert-Butyl Ether and Other Volatile Organic Compounds in Drinking Water in the Northeast and Mid-Atlantic Regions of the United States, 1993–98.* U.S. Geological Survey Water-Resources Investigations Report 00–4228. 128 pp. Available on the internet at: *https://pubs.er.usgs.gov/publication/wri004228.*

Guelfo, J.L. and D.T. Adamson. 2018. Evaluation of a national data set for insights into sources, composition, and concentrations of per- and polyfluoroalkyl substances (PFASs) in U.S. drinking water. *Environmental Pollution* 236 (May): 505–513.

Guelfo J.L., T. Marlow, D.M. Klein, D.A. Savitz, S. Frickel, M. Crimi, and E.M. Suuberg. 2018. Evaluation and Management Strategies for Per- and Polyfluoroalkyl Substances (PFASs) in Drinking Water Aquifers: Perspectives from Impacted U.S. Northeast Communities. Environmental Health Perspectives 126(6):1–13, doi:10.1289/EHP2727.

Hamilton, P.A., T.L. Miller, and D.N. Myers. 2004. *Water Quality in the Nation's Streams and Aquifers: Overview of Selected Findings, 1991–2001.* USGS Circular 1265. Available on the internet at: *http://water.usgs.gov/pubs/circ/2004/1265/pdf/circular1265.pdf.*

Hardin, B.D., G.P. Bond, M.R. Sikov, et al. 1981. Testing of selected workplace chemicals for teratogenic potential. *Scand J Work Environ Health* 7:66–75 (as cited in ATSDR, 1992a).

Hardisty, J.F. 1997a. Pathology Working Group Peer Review of Histiocytic Sarcoma in Female Mice from Two Long-Term Studies with Acetochlor. Experimental Pathology Laboratories, Inc., Research Triangle Park, NC. Laboratory Project ID CTL/C/3196, February 11, 1997. Unpublished report (as cited in USEPA, 2006c).

Hardisty, J.F. 1997b. Pathology Working Group Peer Review of Hepatocellular Neoplasms in the Liver of Rats and Mice from Five Long-Term Studies with Acetochlor. Experimental Pathology Laboratories, Inc., Research Triangle Park, NC. Laboratory Project ID CTL/C/3197, February 11, 1997. Unpublished report (as cited in USEPA, 2006c).

Hardisty, J.F. 1997c. Pathology Working Group Peer Review of Neoplastic Lesions in the Lung of Male and Female Mice from Two Long-Term Studies with Acetochlor. Experimental Pathology Laboratories, Inc., Research Triangle Park, NC. Laboratory Project ID CTL/C/3198, February 11, 1997. Unpublished report (as cited in USEPA, 2006c).

Hartzler, B. 2004. Are All Metolachlor Products Equal? Version 2.0. December 19, 2003, updated February 5, 2004. Available on the internet at: *http://extension.agron.iastate.edu/weeds/mgmt/2004/stalwart2.shtml.*

Health Canada. 2018. 1,4-Dioxane in Drinking Water—Guideline Technical Document for Public Consultation. Available on the internet at: *https://www.canada.ca/content/dam/hc-sc/documents/programs/consultation-1-4-dioxane-drinking-water/pub-eng.pdf.*

Helman, G., I. Shah, A. Williams, J. Edwards, J. Dunne, and G. Patlewicz. 2019. Generalized Read-Across (GenRA): A workflow implemented into the EPA CompTox Chemicals Dashboard, *ALTEX—Alternatives to Animal Experimentation* 36(3):462–465. Doi: 10.14573/altex.1811292.

Hopple, J.A., G.C. Delzer, and J.A. Kingsbury. 2009. *Anthropogenic Organic Compounds in Source Water of Selected Community Water Systems that Use Groundwater, 2002–05.* U.S. Geological Survey Scientific Investigations Report 2009–5200. 74 pp. Available on the internet at: *http://pubs.usgs.gov/sir/2009/5200/pdf/sir2009-5200.pdf.*

Hazardous Substances Data Bank (HSDB). 2012. Profile for Acetochlor. Available on the internet at: *http://toxnet.nlm.nih.gov/cgi-bin/sis/search2/r?dbs+hsdb:@term+@DOCNO+6550.* Last revision date: October 12, 2012.

HSDB. 2019. Profile for Methyl Bromide. Available on the internet at: *http://toxnet.nlm.nih.gov/cgi-bin/sis/search2/r?dbs+hsdb:@term+@DOCNO+779.* Last revision date May 31, 2019.

Hazelette, J. 1989. Metolachlor Technical: Chronic Toxicity Study in Dogs: Study No. 862253. Unpublished study prepared by Ciba-Geigy Corp. 758 p. MRID: 4098070 (as cited in USEPA, 2018d).

Hu X.C., D.Q. Andrews, A.B. Lindstrom, T.A. Bruton, L.A. Schaider, P. Grandjean, et al. 2016. Detection of poly- and perfluoroalkyl substances (PFASs) in U.S. drinking water linked to industrial sites, military fire training areas, and wastewater treatment plants. *Environ Sci Technol Lett* 3(10):344–350.

International Agency for Research on Cancer (IARC). 2019a. Agents Classified by the IARC Monographs, volumes 1–125. Available on the internet at: *http://monographs.iarc.fr/ENG/Classification/index.php.* Last updated December 12, 2019.

IARC. 2019b. Monographs on the Identification of Carcinogenic Hazards to Humans. Available on the internet at: *https://monographs.iarc.fr/wp-content/uploads/2019/07/Preamble-2019.pdf.* Last updated January 2019.

ICI, Inc. 1988. MRID No. 41565118; HED Doc No. 008478. (or Broadmeadow, A. 1988). SC–5676: Toxicity Study by Oral (Capsule) Administration to Beagle Dogs for 52 Weeks. Life Science Research, Ltd., Suffolk, England. Study No.: LSR Report 88/SUC018/0136; December 2, 1988 (as cited in USEPA, 1993).

Interstate Technology Regulatory Council (ITRC). 2018. Environmental Fate and Transport for Per- and Polyfluoroalkyl Substances. March 16. Available on the internet at: *https://pfas-1.itrcweb.org/wp-content/uploads/2018/03/pfas_fact_sheet_fate_and_transport__3_16_18.pdf.*

Jain, R.B. 2018. Time trends over 2003–2014 in the concentrations of selected perfluoroalkyl substance among U.S. adults aged ≥20 years: Interpretational issues. *Science of the Total Environment* 645:946–957.

Japan Bioassay Research Center (JBRC). 1998. Two-week studies of 1,4-dioxane in F344 rats and BDF1 mice (drinking water studies). Kanagawa, Japan: Japan Bioassay Research Center.

Kaneda, M., H. Hojo, S. Teramoto, et al. 1998. Oral teratogenicity studies of methyl bromide in rats and rabbits. *Food Chem Toxicol.* 36(5):421–427.

Kano, H., Y. Umeda, T. Kasai, T. Sasaki, M. Matsumoto, K. Yamazaki, K. Nagano, H. Arito, and S. Fukushima. 2009. Carcinogenicity of 1,4-dioxane administered in drinking-water to rats and mice for 2 years. *Food Chem Toxicol.* 47:2776–2784.

Kato, N., S. Morinobu, and S. Ishizu. 1986. Subacute inhalation experiment for methyl bromide in rats. *Ind Health* 24(2):87–103 (as cited in ATSDR, 1992a).

Kawashima, K, M. Usami, K. Sakemi, et al. 1995. Studies on the establishment of appropriate spermatogenic endpoints for male fertility disturbance in rodent induced by drugs and chemicals. I. Nitrobenzene. *J Toxicol Sci* 20:15–22 (as cited in USEPA, 2009f).

Kingsbury, J.A., G.C. Delzer, and J.A. Hopple. 2008. *Anthropogenic Organic Compounds in Source Water of Nine Community Water Systems that Withdraw from Streams, 2002–05:* U.S. Geological Survey Scientific Investigations Report 2008–5208. 66 pp. Available on the internet at: *http://pubs.usgs.gov/sir/2008/5208/pdf/sir2008-5208.pdf.*

Kociba, R.J., S.B. McCollister, C. Park, T.R. Torkelson, and P.J. Ghering. 1974. 1,4-Dioxane. I. Results of a 2-year ingestion study in rats. *Toxicology and Applied Pharmacology* 30:275–286.

Koida, M, T. Nakagawa, K. Irimura, et al. 1995. Effects on the sperm and testis of rats treated with nitrobenzene: age and administration period differences. *Teratology* 52:39B (as cited in USEPA, 2009f).

Lau, C., J.R. Thibodeaux, R.G. Hanson, M.G. Narotsky, J.M. Rogers, A.B. Lindstrom, and M.J. Strynar. 2006. Effects of perfluorooctanoic acid exposure during pregnancy in the mouse. *Toxicol Sci.* 90(2):510–518.

Leahy, P.P. and T.H. Thompson. 1994. *Overview of the National Water-Quality Assessment Program.* U.S. Geological Survey Open-File Report 94–70. 4 pp. Available on the internet at: *http://water.usgs.gov/nawqa/NAWQA.OFR94-70.html.*

Levine, B.S., P.M. Lish, E.M. Furedi, V.S. Rac, and J.M. Sagartz. 1983. Determination of the chronic mammalian toxicological effects of RDX (twenty-four-month, chronic toxicity/carcinogenicity

study of hexahydro-1,3,5-trinitro-1,3,5-triazine (RDX) in the Fischer 344 rat): Final report—phase V. Chicago, IL: IIT Research Institute. (As cited in ATSDR, 2012a; USEPA, 2018e; USEPA, 1992.)

Lindsey, B.D., M.P. Berndt, B.G. Katz, A.F. Ardis, and K.A. Skach. 2008. *Factors Affecting Water Quality in Selected Carbonate Aquifers in the United States, 1993–2005.* U.S. Geological Survey Scientific Investigations Report 2008–5240. Available on the internet at: *http://pubs.usgs.gov/sir/2008/5240/.*

Lish, P.M., B.S. Levine, E.M. Furedi, J.M. Sagartz, and V.S. Rac. 1984. Determination of the chronic mammalian toxicological effects of RDX: twenty-four-month, chronic toxicity/carcinogenicity study of hexahydro-1,3,5-trinitro-1,3,5-triazine (RDX) in the B6C3F1 hybrid mouse (Volumes 1–3). (ADA181766. DAMD17–79–C–9161). Fort Detrick. (As cited in ATSDR, 2012a; USEPA, 2018e; USEPA, 1992.)

Luebker, D.J., M.T. Case, R.G. York, J.A. Moore, K.J. Hansen, and J.L. Butenhoff. 2005a. Two-generation reproduction and cross-foster studies of perfluorooctanesulfonate (PFOS) in rats. *Toxicology* 215(1):126–148.

Luebker, D.J., R.G. York, K.J. Hansen, J.A. Moore, and J.L. Butenhoff. 2005b. Neonatal mortality from in utero exposure to perfluorooctanesulfonate (PFOS) in Sprague–Dawley rats: Dose–response, and biochemical and pharamacokinetic parameters. *Toxicology* 215(1):149–169.

Lytle, D.A., Chait, H., Williams, D., Pham, M., Muhlen, C. 2017. Removal of Strontium by Ion Exchange and Lime Softening. AWWA International Symposium on Inorganics, Detroit, MI, March 21–22.

Matsuura, I., N. Hoshino, Y. Wako, et al. 1995. Sperm parameter studies on three testicular toxicants in rats. *Teratology* 52:39B (as cited in USEPA, 2009f).

Mertens, J.J.W.M. 1997. A 24-month chronic dietary study of methyl bromide in rats. WIL Research Laboratories, Inc., 1407 George Road, Ashland, OH 44805–9281, Laboratory Study No. WIL–49014, December 9, 1997, MRID 44462501. Unpublished.

Minnesota Department of Health (MDH). 2019. Perfluoroalkyl Substances (PFAS). Available on the internet at: *https://www.health.state.mn.us/communities/environment/hazardous/topics/pfcs.html#safelevels.*

Michigan Department of Environment, Great Lakes and Energy (Michigan EGLE). 2019. PFAS Results CWS. Available on the internet at: *https://data.michigan.gov/Environment/PFAS-Results-CWS/fa3u-vbsk.* Accessed April 1, 2019.

Michigan Science Advisory Workgroup. 2019. Health-Based Drinking Water Value Recommendations for PFAS in Michigan. Available on the internet at: *https://www.michigan.gov/documents/pfasresponse/Health-Based_Drinking_Water_Value_Recommendations_for_PFAS_in_Michigan_Report_659258_7.pdf.*

Moran, M.J., W.W. Lapham, B.L. Rowe, and J.S. Zogorski. 2002. *Occurrence and Status of Volatile Organic Compounds in Ground Water from Rural, Untreated, Self-Supplied Domestic Wells in the United States, 1986–1999.* U.S. Geological Survey Water-Resources Investigations Report 02–4085, 51 pp.

Muralidhara, S., R. Ramanathan, S.M. Mehta, L.H. Lash, D. Acosta, and J.V. Bruckner. 2001. Acute, subacute, and subchronic oral toxicity studies of 1,1-dichloroethane in rats: Application to risk evaluation. *Toxicol. Sci.* 64:135–145.

Najm, I. 2016. *Strontium in Water: Critical Review of its Treatment Options and Considerations for its Removal.* Water Reuse Foundation and American Water Works Association. Web Report #4604. ISBN 978–1–60573–239–8.

National Academies of Sciences, Engineering, and Medicine (NASEM). 2019. *A Class Approach to Hazard Assessment of Organohalogen Flame Retardants.* Washington, DC: The National Academies Press. Available on the internet at: *https://doi.org/10.17226/25412.*

Naylor, M.W. and W.E. Ribelin. 1986. Chronic Feeding Study of MON 097 in Albino Rats. Monsanto Environmental Health Laboratory, St. Louis, MO. Laboratory Project ID EHL–83107 (Report No. MSL–6119). September 25, 1986. Unpublished report (as cited in USEPA, 2006c).

North Carolina Department of Environmental Quality (NCDEQ). 2018. Expanded PFAS Analysis on DEQ-Collected Private Wells Associated with Chemours-Fayetteville. Available on the internet at: *https://files.nc.gov/ncdeq/GenX/DEQ.PWW_.Expanded.PFAS_.Summary_WEB-POST_030818.pdf.*

National Center for Food and Agricultural Policy (NCFAP). 2000. *Pesticide Use in U.S. Crop Production: 1997. National Summary Report.* Available on the internet at: *http://www.ncfap.org/documents/nationalsummary1997.pdf.*

National Cancer Institute (NCI). 1978. *Bioassay of 1,1-Dichloroethane for Possible Carcinogenicity.* Bethesda, MD: National Cancer Institute. NCI Carcinogenesis Technical Report Series No. 66 (NCI–CG–TR–66). DHEW Publication No. (NIH) 78–1316. Available on the internet at: *http://ntp.niehs.nih.gov/ntp/htdocs/LT_rpts/tr066.pdf.*

New Hampshire Department of Environmental Services (NHDES). 2017. PFOA/PFOS Sampling Results for Public Water Systems in New Hampshire. Available on the internet at: *https://www.des.nh.gov/organization/commissioner/documents/pfoa-public-water-results-20170503.pdf.*

NHDES. 2019. NHDES Submits Final Rulemaking Proposal for PFOA, PFOS, PFHxS, and PFNA. Available on the internet at: *https://www4.des.state.nh.us/nh-pfas-investigation/?p=1044.*

National Institute for Occupational Safety and Health (NIOSH). 1978. *Occupational health guidelines for 1,1-dichloroethane. Occupational health guidelines for chemical hazards.* Washington, DC: US Department of Labor, National Institute for Occupational Safety and Health, 1–4.

New Jersey Department of Environmental Protection (NJDEP). 2019. Agency communication between USEPA and NJDEP. October, 2019.

New Jersey Department of Health (NJDOH). 2017. Drinking Water Facts: Per- and Polyfluoroalkyl Substances (PFAS) in Drinking Water. Available on the internet at: *https://www.nj.gov/health/ceohs/documents/pfas_drinking%20water.pdf.*

National Research Council (NRC). 2012. *Preparing for the Third Decade of the National Water-Quality Assessment Program.* Washington, DC: National Academies Press.

National Toxicology Program (NTP). 1983. Report on the subchronic toxicity via gavage of nitrobenzene (C60082) in Fischer 344 rats and B6C3F1 mice [unpublished]. National Toxicology Program, prepared by the EG&G Mason Research Institute, Worcester, MA, for the National Toxicology Program, National Institute of Environmental Health Services, Public Health Service, U.S. Department of Health and Human Services, Research Triangle Park, NC; MRI–NTP 08–83–19 (as cited in USEPA, 2009f).

NTP. 1992. Toxicology and carcinogenesis studies of methyl bromide (CAS NO. 74–83–9) in B6C3F1 mice (inhalation studies). U.S. Department of Health and Human Services. Public Health Service. National Institutes of Health.

NTP. 1993. Toxicology and carcinogenesis studies of 1,2,3-trichloropropane (CAS No. 96–18–4) in F344/N rats and B6C3F1 mice (gavage studies). Research Triangle Park, NC, US Department of Health and Human Services, National Toxicology Program, pp. 1–345. NTP TR 384, December 1993.

New York State Department of Health (NYSDOH). 2018. Drinking Water Quality Council Recommends Nation's Most Protective Maximum Contaminant Levels for Three Unregulated Contaminants in Drinking Water. Available on the internet at: *https://www.health.ny.gov/press/releases/2018/2018-12-18_drinking_water_quality_council_recommendations.htm.*

O'Donnell, A.J., D.A. Lytle, S. Harmon, K. Vu, H. Chait, and D.D. Dionysiou. 2016. Removal of strontium from drinking water by conventional treatment and lime softening in bench-scale studies. *Water Research* 103: 319–333. *http://dx.doi.org/10.1016/j.watres.2016.06.036.*

Organization for Economic Cooperation and Development (OECD). 2019. Portal on Per and Poly Fluorinated Chemicals. Available on the internet at: *https://www.oecd.org/chemicalsafety/portal-perfluorinated-chemicals/.* Accessed November 26, 2019.

Page, J.G. 1981. Two-Generation Reproduction Study in Albino Rats with Metolachlor Technical. Toxigenics, Decatur, IL. Study Number 450–0272,

August 31, 1981. Unpublished. MRID: 00080897 (cited as ''Smith et al. 1981'' in USEPA 1995b, cited as ''Ciba-Geigy 1981'' in USEPA 1990b, cited as ''Page 1981'' in USEPA 2018d).

Patlewicz, G., L.E. Lizarraga, D. Rua, D.G. Allen, A.B. Daniel, S.C. Fitzpatrick, N. Garcia-Reyero, J. Gordon, P. Hakkinen, A.S. Howard, A. Karmaus, J. Matheson, M. Mumtaz, A–N. Richarz, P. Ruiz, L. Scarano, T. Yamada, and N. Kleinstreuer. 2019a. Exploring current read-across applications and needs among selected U.S. Federal Agencies. *Regulatory Toxicology and Pharmacology* 106: 197–209. *https://doi.org/10.1016/j.yrtph.2019.05.011.*

Patlewicz, G., A.M. Richard, A.J. Williams, C.M. Grulke, R. Sams, J. Lambert, P.D. Noyes, M.J. DeVito, R.N. Hines, M. Strynar, A. Guiseppi-Elie, and R.S. Thomas. 2019b. A chemical category-based prioritization approach for selecting 75 per- and Polyfluoroalkyl substances (PFAS) for tiered toxicity and toxicokinetic testing. *Environ. Health Perspect.* 127(1): 14501, 10.1289/EHP4555.

Reuzel, P.G., C.F. Kuper, H.C. Dreef-Van Der Meulen, et al. 1987. Initial submission: Chronic (29-month) inhalation toxicity and carcinogenicity study of methyl bromide in rats with cover letter dated 081092. DuPont Chem Co. Submitted to the U.S. EPA under TSCA Section ECP. OTS0546338. EPA Doc. 88–920008788 (as cited in ATSDR, 1992a).

Ribelin, W.E. 1987. Histopathology Findings in Noses of Rats Administered MON 097 in a Lifetime Feeding Study. Tegeris Laboratories, Laurel, MD and Monsanto Environmental Health Laboratory, St. Louis, MO. Laboratory Project No. ML–86–44/EHL 86027. November 4, 1987. Unpublished report (as cited in USEPA, 2006c).

Ross, I., J. McDonough, J. Miles, P. Storch, P.T. Kochunarayanan, E. Kalve, J. Hurst, S.S. Dasgupta, and J. Burdick. 2018. A review of emerging technologies for remediation of PFASs. *Remediation* 28:101–126.

Rowe, B.L., P.L Toccalino, M.J. Moran, J.S. Zogorski, and C.V. Price. 2007. Occurrence and Potential Human-Health Relevance of Volatile Organic Compounds in Drinking Water from Domestic Wells in the United States. *Environmental Health Perspectives* 115(11): 1539–46.

Rowe, G.L., K. Belitz, H.I. Essaid, R.J. Gilliom, P.A. Hamilton, A.B. Hoos, D.D. Lynch, M.D. Munn, and D.W. Wolock. 2010. *Design of Cycle 3 of the National Water-Quality Assessment Program, 2013–2023: Part 1: Framework of Water-Quality Issues and Potential Approaches.* U.S. Geological Survey Open-File Report 2009–1296. *https://pubs.usgs.gov/of/2009/1296/.*

Rowe, G.L., K. Belitz, C.R. Demas, H.I. Essaid, R.J. Gilliom, P.A. Hamilton, A.B. Hoos, C.J. Lee, M.D. Munn, and D.W. Wolock. 2013. *Design of Cycle 3 of the National Water-Quality Assessment Program, 2013–23: Part 2: Science Plan for Improved Water-Quality Information and Management.* U.S. Geological Survey. Open-File Report 2013–1160. *https://pubs.er.usgs.gov/publication/ofr20131160.*

Schatzow, S. 1984. Memorandum to D. Clay, November 9, 1984. FXI–OTS–1184–0327. Supplement, Sequence D (as cited in USEPA, 2007b).

Schwetz, B.A., B.K. Leong, and P.J. Gehring. 1974. Embryo- and fetotoxicity of inhaled carbon tetrachloride, 1,1-dichloroethane, and methyl ethyl ketone in rats. *Toxicol Appl Pharmacol.* 28: 452–464 (as cited in CalEPA, 2003).

Sikov M.R., W.C. Cannon, and D.B. Carr. 1980. *Teratologic Assessment of Butylene Oxide, Styrene Oxide and Methyl Bromide.* Cincinnati, OH: National Institute for Occupational Safety and Health. PBSl168510 (as cited in ATSDR, 1992a).

Speth, T. 2019. *Treatment for Contaminants of Emerging Concern (CECs): Per- and Polyfluoroalkyl Substances (PFAS), Cyanotoxins, and Perchlorate.* Presentation delivered on February 26, 2019, as part of the EPA's Small Systems Monthly Webinar Series.

Sun, M., Arevalo, E., M. Strynar, A. Lindstrom, M. Richardson, B. Kearns, A. Pickett, C. Smith, and D.R. Knappe, 2016. Legacy and emerging perfluoroalkyl substances are important drinking water contaminants in the Cape Fear River Watershed of North Carolina. *Environmental Science & Technology Letters* 3(12): 415–419.

Thomford, P.J. 2002. 104-week dietary chronic toxicity and carcinogenicity study with perfluorooctane sulfonic acid potassium salt (PFOS; T–6295) in rats. 6329–183. Covance Laboratories Inc (as cited in USEPA, 2016g).

Tisdel, M., T. Jackson, P. MacWilliams, et al. 1983. Two-year Chronic Oral Toxicity and Oncogenicity Study with Metolachlor in Albino Rats: Study No. 80030. Final rept. (Unpublished study received May 24, 1983 under 100–587; prepared by Hazleton Raltech, Inc., submitted by Ciba-Geigy Corp., Greensboro, NC; CDL: 250369–A; 250370; 250371; 250372; 250373; 250374; 250375) (cited as MRID 00129377 in USEPA, 2018d).

Toccalino, P.L., J.E. Norman, and K.J. Hitt. 2010. *Quality of Source Water from Public-Supply Wells in the United States, 1993–2007.* U.S. Geological Survey Scientific Investigations Report 2010–5024. 206 pp. Available on the internet at: *http://pubs.usgs.gov/sir/2010/5024/.*

United Nations Environmental Programme (UNEP). 2018. *UNEP May 2018 Report of the Technology And Economic Assessment Panel: Evaluation Of 2018 Critical Use Nominations For Methyl Bromide And Related Matters. Interim Report.* May 2018. Available on the internet at: *https://ozone.unep.org/sites/default/files/2019-04/MBTOC-CUN-Interim-report-May2018.docx.*

United States Department of Agriculture (USDA). 2018. *PDP Drinking Water Project (2001–2013).* Available on the internet at: *https://www.ams.usda.gov/datasets/pdp/pdp-drinking-water-project.*

United States Environmental Protection Agency (USEPA). 1985. *Chemical Hazard Information Profile. Draft Report. Methyl Bromide.* Rev. Feb. 20, 1985. USEPA, OTS, Washington, DC (as cited in ATSDR, 1992a).

USEPA. 1986. *Guidelines for Carcinogen Risk Assessment.* EPA 630–R–00–004.

USEPA. 1988. *Chemical Assessment Summary Information for Octahydro-1,3,5,7-tetranitro-1,3,5,7-tetrazocine (HMX) on the Integrated Risk Information System (IRIS).* National Center for Environmental Assessment, Washington, DC. Available on the internet at: *https://cfpub.epa.gov/ncea/iris2/chemicalLanding.cfm?substance_nmbr=311.*

USEPA. 1989a. Bromomethane (CASRN 74–83–9). Integrated Risk Information System. Carcinogenicity assessment verification date March 1, 1989. U.S. Environmental Protection Agency, Office of Research and Development, Washington, DC.

USEPA. 1989b. *1,2,3-Trichloropropane Drinking Water Health Advisory.* Office of Water, PB91–160697.

USEPA. 1990a. Integrated Risk Information System (IRIS) on 1,1-Dichloroethane. Available on the internet at: *https://cfpub.epa.gov/ncea/iris/iris_documents/documents/subst/0409_summary.pdf.*

USEPA. 1990b. Integrated Risk Information System (IRIS) on Metolachlor. Available on the internet at: *https://cfpub.epa.gov/ncea/iris/iris_documents/documents/subst/0074_summary.pdf.*

USEPA. 1992. Health Advisory for Hexahydro-1,3,5-trinitro-1,3,5-triazine (RDX). In Roberts, WC and WR Hartley eds. *Drinking Water Health Advisory: Munitions.* Boca Raton FL: Lewis Publishers, pp 133–180.

USEPA. 1993. Integrated Risk Information System (IRIS) Chemical Assessment Summary. Acetochlor; CASRN 34256–82–1. National Center for Environmental Assessment. September 1, 1993. Available on the internet at: *https://cfpub.epa.gov/ncea/iris/iris_documents/documents/subst/0521_summary.pdf.*

USEPA. 1995a. Policy on Evaluating Health Risks to Children. October 20, 1995. Science Policy Council, Washington, DC. Available on the internet at: *https://www.epa.gov/sites/production/files/2014-05/documents/1995_childrens_health_policy_statement.pdf*; Cover memo at: *https://www.epa.gov/sites/production/files/2014-05/documents/health_policy_cover_memo.pdf.*

USEPA. 1995b. *Reregistration Eligibility Decision (RED)—Metolachlor.* EPA 738–R–95–006. Office of Prevention, Pesticides and Toxic Substances. Available on the internet at: *https://www3.epa.gov/pesticides/chem_search/reg_actions/reregistration/red_PC-108801_1-Dec-94.pdf.*

USEPA. 1996. National Primary Drinking Water Regulations: Monitoring Requirements for Public Drinking Water

Supplies: Cryptosporidium, Giardia, Viruses, Disinfection Byproducts, Water Treatment Plant Data and Other Information Requirements. **Federal Register** 61(94): 24353, May 14, 1996.

USEPA. 1998. Announcement of the Drinking Water Contaminant Candidate List; Notice. **Federal Register** 63(40): 10273. March 2, 1998. Available on the internet at: *https://federalregister.gov/a/98-5313.*

USEPA. 1999. Revisions to the Unregulated Contaminant Monitoring Regulation for Public Water Systems; Final Rule. **Federal Register** 64(80): 50556, September 17, 1999.

USEPA. 2000. *National Drinking Water Advisory Council Minutes of Meeting Held June 14, 2000.* EPA 810–S–00–001. August 2000.

USEPA. 2001a. *Statistical Design and Sample Selection for the Unregulated Contaminant Monitoring Regulation (1999).* August 2001. Office of Water. EPA–815–R–01–004.

USEPA. 2001b. *Reference Guide for the Unregulated Contaminant Monitoring Regulation.* Office of Water. EPA 815–R–01–023. 65 pp.

USEPA. 2002a. *Community Water System Survey 2000. Volume I: Overview.* EPA 815–R–02–005A. December 2002. Available on the internet at: *http://nepis.epa.gov/Exe/ZyPDF.cgi?Dockey=20001ZK5.txt.*

USEPA. 2002b. *Community Water System Survey 2000. Volume II: Detailed Tables and Survey Methodology.* EPA 815–R–02–005B. December 2002. Available on the internet at: *http://nepis.epa.gov/Exe/ZyPDF.cgi?Dockey=2000JTKL.txt.*

USEPA. 2002c. *Report of the Food Quality Protection Act (FQPA) Tolerance Reassessment Progress and Risk Management Decision (TRED) for Metolachlor.* Office of Prevention, Pesticides and Toxic Substances. Available on the internet at: *https://www3.epa.gov/pesticides/chem_search/reg_actions/reregistration/tred_PC-108801_1-Oct-02.pdf.*

USEPA. 2003a. Announcement of Regulatory Determinations for Priority Contaminants on the Drinking Water Contaminant Candidate List. **Federal Register** 68(138): 42898. July 18, 2003. Available on the internet at: *https://federalregister.gov/a/03-18151.*

USEPA. 2003b. *How are the Toxics Release Inventory Data Used?* EPA 260–R–002–004. May 2003. Available on the internet at: *https://nepis.epa.gov/Exe/ZyPURL.cgi?Dockey=900B0I00.TXT.*

USEPA. 2004a. *Pesticide Industry Sales and Usage: 2000 and 2001 Market Estimates.* Biological and Economic Analysis Division, Office of Pesticide Programs.

USEPA. 2004b. Cancer Assessment Document. Evaluation of the Carcinogenic Potential of Acetochlor (Fourth Evaluation). Final Report. Cancer Assessment Review Committee (CARC), Health Effects Division Office of Pesticide Programs. EPA–HQ–OPP–2005–0227–0016. Available on the internet at: *https://archive.epa.gov/pesticides/chemicalsearch/chemical/foia/web/pdf/121601/121601-2004-08-31a.pdf.*

USEPA. 2005a. Drinking Water Contaminant Candidate List 2; Final Notice. **Federal Register** 70(36): 9071. February 24, 2005. Available on the internet at: *https://federalregister.gov/a/05-3527.*

USEPA. 2005b. *Guidelines for Carcinogen Risk Assessment.* EPA–630–P–03–001F. Available on the internet at: *http://www2.epa.gov/sites/production/files/2013–09/documents/cancer_guidelines_final_3-25-05.pdf.*

USEPA. 2005c. *Supplemental Guidance for Assessing Susceptibility from Early-Life Exposure to Carcinogens.* U.S. Environmental Protection Agency Risk Assessment Forum. Washington, DC. EPA/630/R–03/003F. Available on the internet at: *http://www.epa.gov/cancerguidelines/guidelines-carcinogen-supplement.htm.*

USEPA. 2006a. *Provisional Peer Reviewed Toxicity Values for 1,1-Dichloroethane (CASRN 75–34–3).* Superfund Health Risk Technical Support Center, National Center for Environmental Assessment, Office of Research and Development. 9–27–2006. Available on the internet at: *https://hhpprtv.ornl.gov/issue_papers/Dichloroethane11.pdf.*

USEPA. 2006b. *Report of the Food Quality Protection Act (FQPA) Tolerance Reassessment Progress and Risk Management Decision (TRED) for Acetochlor.* Office of Prevention, Pesticides and Toxic Substances. EPA 738–R–00–009. March 2006. Available on the internet at: *https://archive.epa.gov/pesticides/reregistration/web/pdf/acetochlor_tred.pdf.*

USEPA. 2006c. Acetochlor Revised HED Chapter of the Tolerance Reassessment Eligibility Decision (TRED) Document, EPA–HQ–OPPTS, PC Code: 121601, DP Barcode: D292336. Available on the internet at: *https://www.regulations.gov/document?D=EPA-HQ-OPP-2005-0227-0024.*

USEPA. 2006d. *Report of Food Quality Protection Act (FQPA) Tolerance Reassessment and Risk Management Decision (TRED) for Methyl Bromide, and Reregistration Eligibility Decision (RED) for Methyl Bromide's Commodity Uses.* Office of Prevention, Pesticides and Toxic Substances. EPA 738–R–06–026. Available on the internet at: *https://archive.epa.gov/pesticides/reregistration/web/pdf/methyl_bromide_tred.pdf.*

USEPA. 2006e. *Methyl Bromide: Phase 5 Health Effects Division (HED) Human Health Risk Assessment for Commodity Uses.* PC Code 053201, DP Barcode D304623. Office of Prevention, Pesticides and Toxic Substances.

USEPA. 2007a. Unregulated Contaminant Monitoring Regulation (UCMR) for Public Water Systems Revisions. **Federal Register** 72(2): 367, January 4, 2007.

USEPA. 2007b. Provisional Peer Reviewed Toxicity Values for Bromomethane (CASRN 74–83–9). Superfund Health Risk Technical Support Center, National Center for Environmental Assessment, Office of Research and Development, U.S. Environmental Protection Agency, Cincinnati, OH. *https://hhpprtv.ornl.gov/issue_papers/Bromomethane.pdf.*

USEPA. 2007c. Benchmark dose software (BMDS) version 1.4.1c (last modified November 9, 2007).

USEPA. 2008a. Drinking Water: Regulatory Determinations Regarding Contaminants on the Second Drinking Water Contaminant Candidate List. **Federal Register** 73(147): 44251. July 30, 2008. Available on the internet at: *https://federalregister.gov/a/E8-17463.*

USEPA. 2008b. *The Analysis of Occurrence Data from the First Unregulated Contaminant Monitoring Regulation (UCMR 1) in Support of Regulatory Determinations for the Second Drinking Water Contaminant Candidate List (CCL 2).* EPA 815–R–08–013.

USEPA, 2008c. *The Analysis of Occurrence Data from the Unregulated Contaminant Monitoring (UCM) Program and National Inorganics and Radionuclides Survey (NIRS) in Support of Regulatory Determinations for the Second Drinking Water Contaminant Candidate List (CCL 2).* EPA 815–R–08–014. June 2008.

USEPA. 2008d. Using the 2006 Inventory Update Reporting (IUR) Public Data: Background Document. December 2008. Available on the internet at: *https://www.epa.gov/sites/production/files/documents/iurdbbackground_0.pdf.*

USEPA. 2009a. Drinking Water Contaminant Candidate List 3—Final. **Federal Register** 74(194): 51850. October 8, 2009. Available on the internet at: *https://federalregister.gov/a/E9-24287.*

USEPA. 2009b. *The Analysis of Regulated Contaminant Occurrence Data from Public Water Systems in Support of the Second Six-Year Review of National Primary Drinking Water Regulations.* EPA–815–B–09–006. October 2009.

USEPA. 2009c. *Community Water System Survey 2006. Volume 1: Overview.* EPA 815–R–09–001.

USEPA. 2009d. *Community Water System Survey 2006. Volume II: Detailed Tables and Survey Methodology.* EPA 815–R–09–002.

USEPA. 2009e. *Amended Reregistration Eligibility Decision for Methyl Bromide (soil and non-food structural uses).* Office of Prevention, Pesticides and Toxic Substances. EPA 738–R–09–311. Available on the internet at: *https://archive.epa.gov/pesticides/reregistration/web/pdf/methylbromide-red-amended.pdf.*

USEPA. 2009f. *Toxicological Review of Nitrobenzene (CAS No. 98–95–3) in Support of Summary Information on the Integrated Risk Information System (IRIS).* National Center for Environmental Assessment, Washington, DC. EPA 635–R–08–004F.

USEPA. 2009g. *Toxicological Review of 1,2,3-Trichloropropane in Support of Summary Information on the Integrated Risk Information System (IRIS).* EPA/635/R–08/010F. Available on the

internet at: *https://cfpub.epa.gov/ncea/iris/iris_documents/documents/toxreviews/0200tr.pdf.*

USEPA. 2010a. Letter from James A. Tompkins, EPA Office of Prevention, Pesticides, and Toxic Substances, to Dr. David I. Gustafason, Monsanto Company. May 12, 2010. Available on the internet at: *https://www3.epa.gov/pesticides/chem_search/ppls/000524-00473-20100512.pdf.*

USEPA. 2010b. *Toxicological Review of 1,4-Dioxane (CAS No. 123–91–1): In Support of Summary Information on the Integrated Risk Information System (IRIS).* EPA 635–R–09–005F. Available on the internet at: *https://cfpub.epa.gov/ncea/risk/recordisplay.cfm?deid=205170.*

USEPA. 2011a. Drinking Water: Regulatory Determination on Perchlorate. **Federal Register** 76(29): 7762, February 11, 2011. Available on the internet at: *https://federalregister.gov/a/2011-2603.*

USEPA. 2011b. *Exposure Factors Handbook 2011 Edition (Final Report).* EPA 600–R–09–052F.

USEPA. 2011c. *Pesticide Industry Sales and Usage: 2006 and 2007 Market Estimates.* Biological and Economic Analysis Division, Office of Pesticide Programs. Available on the internet at: *http://www.epa.gov/sites/production/files/2015-10/documents/market_estimates2007.pdf.*

USEPA. 2011d. Methyl Bromide; Cancellation Order for Registration Amendments To Terminate Certain Soil Uses. **Federal Register** 76(98): 29238, May 20, 2011.

USEPA. 2012a. Revisions to the Unregulated Contaminant Monitoring Regulation (UCMR 3) for Public Water Systems. **Federal Register** 77(85): 26071, May 2, 2012.

USEPA. 2012b. Butylate, Clethodim, Dichlorvos, Dicofol, Isopropyl Carbanilate, et al.; Tolerance Actions. **Federal Register** 77(187): 59120, September 26, 2012.

USEPA. 2013. *Toxicological review of 1,4-Dioxane (with Inhalation Update) (CAS No. 123–91–1) in Support of Summary Information on the Integrated Risk Information System (IRIS).* EPA 635–R–11–003–F. Available on the internet at: *https://cfpub.epa.gov/ncea/iris/iris_documents/documents/toxreviews/0326tr.pdf.*

USEPA. 2014a. Announcement of Preliminary Regulatory Determinations for Contaminants on the Third Drinking Water Contaminant Candidate List. **Federal Register** 79(202): 62715, October 20, 2014.

USEPA. 2014b. *Metolachlor and S-Metolachlor Preliminary Work Plan.* Office of Pesticide Programs. EPA–HQ–OPP–2014–0772–0013. Available on the internet at: *http://www.regulations.gov/#!documentDetail;D=EPA-HQ-OPP-2014-0772-0013.*

USEPA. 2014c. *Health Effects Support Document for Strontium.* Office of Water. EPA 820–P–14–001. Accessed September 20, 2019. Available on the internet at: *https://www.regulations.gov/document?D=EPA-HQ-OW-2012-0155-0008.*

USEPA. 2015a. *Occurrence Data from the Second Unregulated Contaminant Monitoring Regulation (UCMR 2).* December 2015. EPA 815–R15–003.

USEPA. 2015b. *Peer Review Handbook 4th Edition.* EPA 100–B–15–001. Available on the internet at: *https://www.epa.gov/osa/peer-review-handbook-4th-edition-2015.*

USEPA. 2016a. Announcement of Final Regulatory Determinations for Contaminants on the Third Drinking Water Contaminant Candidate List. **Federal Register** 81(1): 13, January 4, 2016.

USEPA. 2016b. Drinking Water Contaminant Candidate List 4—Final. **Federal Register** 81(222): 81099, November 17, 2016.

USEPA. 2016c. *Analysis of Occurrence Data from the Third Six-Year Review of Existing National Primary Drinking Water Regulations: Chemical Phase Rules and Radionuclides Rules.* December 2016. EPA 810–R–16–014.

USEPA. 2016d. 2016 Chemical Data Reporting Frequent Questions. Available on the internet at: *https://www.epa.gov/chemical-data-reporting/2016-chemical-data-reporting-frequent-questions.* Last updated July 11, 2016.

USEPA. 2016e. *Drinking Water Health Advisory for Perfluorooctane Sulfonate (PFOS).* EPA 822–R–16–004. Available on the internet at: *https://www.epa.gov/sites/production/files/2016–05/documents/pfos_health_advisory_final_508.pdf.*

USEPA. 2016f. *Drinking Water Health Advisory for Perfluorooctanoic Acid (PFOA).* EPA 822–R–16–005. Available on the internet at: *https://www.epa.gov/sites/production/files/2016–05/documents/pfoa_health_advisory_final_508.pdf.*

USEPA. 2016g. *Health Effects Support Document for Perfluorooctane Sulfonate (PFOS).* EPA 822–R–16–002. Office of Water. Available on the internet at: *https://www.epa.gov/sites/production/files/2016-05/documents/pfos_hesd_final_508.pdf.*

USEPA. 2016h. *Health Effects Support Document for Perfluorooctanoic Acid.* Office of Water. EPA 822–R–16–003. Available on the internet at: *https://www.epa.gov/sites/production/files/2016-05/documents/pfoa_hesd_final_508.pdf.*

USEPA. 2017a. TRI Explorer: Trends. Available on the internet at: *http://www.epa.gov/triexplorer/trends.htm.* Accessed November 2017.

USEPA. 2017b. *Pesticide Industry Sales and Usage: 2008 to 2012 Market Estimates.* Biological and Economic Analysis Division, Office of Pesticide Programs. Available on the internet at: *https://www.epa.gov/sites/production/files/2017–01/documents/pesticides-industry-sales-usage-2016_0.pdf.*

USEPA. 2017c. *Technical Fact Sheet—Perfluorooctane Sulfonate (PFOS) and Perfluorooctanoic Acid (PFOA).* November 2017. EPA 505–F–17–001. Available on the internet at: *https://www.epa.gov/sites/production/files/2017-12/documents/ffrrofactsheet_contaminants_pfos_pfoa_11-20-17_508_0.pdf.*

USEPA. 2018a. Reaffirmation of EPA's 1995 Policy on Evaluating Health Risks to Children. October 11, 2018. Available on the internet at: *https://www.epa.gov/sites/production/files/2018-10/documents/childrens_health_policy_reaffirmation_memo.10.11.18.pdf.*

USEPA, 2018b. *Method 537.1: Determination of Selected Per- and Polyfluorinated Alkyl Substances in Drinking Water by Solid Phase Extraction and Liquid Chromatography/Tandem Mass Spectrometry (LC/MS/MS).* Office of Research and Development, National Exposure Research Laboratory. EPA 600–R–18–352.

USEPA. 2018c. *Acetochlor Human Health Risk Assessment for Proposed New Use on Alfalfa and Related Animal Commodities.* Office of Chemical Safety and Pollution Prevention. April 4, 2018. Available on the internet at: *https://www.regulations.gov/document?D=EPA-HQ-OPP-2017-0235-0009.*

USEPA. 2018d. S-Metolachlor: Human Health Risk Assessment for (1) Establishment of Tolerances for New Uses on Chicory, Stevia and Swiss Chard; (2) Tolerance Translations from Table Beet Tops, Turnip Greens, and Radish Tops to Crop Group 2 (Leaves of Root and Tuber Vegetables), except Sugar Beets; (3) Tolerance Conversions (i) from Crop Subgroup 4B to Crop Subgroup 22B (Leaf Petiole Vegetable), (ii) from Crop Subgroup 5A to Crop Group 5–16 (Brassica, Head and Stem Vegetable) and (iii) from Crop Subgroup 5B to Crop Subgroup 4–16B (Brassica Leafy Greens); and (4) Tolerance Expansions of Representative Commodities to (i) Cottonseed Subgroup 20C, and (ii) Stalk and Stem Vegetable Subgroup 22A, except Kohlrabi. Human Health Risk Assessment. EPA–HQ–OPP–2017–0465. September.

USEPA. 2018e. *Integrated Risk Information System (IRIS). Toxicological Review of Hexahydro-1,3,5-trinitro-1,3,5-triazine (RDX).* EPA 635–R–18–211Fa. Available on the internet at: *https://cfpub.epa.gov/ncea/iris/iris_documents/documents/toxreviews/0313tr.pdf.*

USEPA. 2019a. *Regulatory Determination 4 Support Document.* EPA 815–R–19–006.

USEPA. 2019b. *Occurrence Data from the Third Unregulated Contaminant Monitoring Rule (UCMR 3).* EPA 815–R–19–007.

USEPA. 2019c. The Toxics Release Inventory (TRI) and Factors to Consider When Using TRI Data. Available on the internet at: *https://www.epa.gov/toxics-release-inventory-tri-program/factors-consider-when-using-toxics-release-inventory-data.*

USEPA. 2019d. *EPA's Per- and Polyfluoroalkyl Substances (PFAS) Action Plan.* EPA 823–R–18–004.

February 2019. Available on the internet at: *https://www.epa.gov/sites/production/files/2019–02/documents/pfas_action_plan_021319_508compliant_1.pdf.*

USEPA. 2019e. Drinking Water Treatability Database. *https://iaspub.epa.gov/tdb/pages/general/home.do.* Last updated October 2019.

USEPA. 2019f. Draft Toxic Substances Control Act (TSCA) Risk Evaluations and TSCA Science Advisory Committee on Chemicals (SACC) Meetings; Cyclic Aliphatic Bromide Cluster (HBCD) and 1,4-Dioxane; Notice of Availability and Public Meetings. **Federal Register** 84(126): 31315, July 1, 2019.

United States Geological Survey (USGS). 2016. National Water Information System (NWIS) Water-Quality Web Services. Available on the internet at: *https://waterdata.usgs.gov/nwis.* Last modified December 2016.

USGS. 2018. Pesticide National Synthesis Project, Pesticide Use Maps. Available on the internet at: *http://water.usgs.gov/nawqa/pnsp/usage/maps/compound_listing.php?year=02.* Accessed December 2018.

Vogel, E.W. and M.J.M. Nivard. 1994. The subtlety of alkylating agents in reactions with biological macromolecules. *Mutat. Res.* 305: 13–32 (as cited in USEPA, 2007).

Vermont Department of Environmental Conservation (VTDEC). 2019. Per and Polyfluoroalkyl Substances (PFAS). Available on the internet at: *https://dec.vermont.gov/water/drinking-water/water-quality-monitoring/pfas.*

Virgo, D.M. and A. Broadmeadow. 1988. SC–5676: Combined Oncogenicity and Toxicity Study in Dietary Administration to CD Rats for 104 Weeks. Life Science Research Ltd., Suffolk, England. Study No. 88/SUC017/0348. March 18, 1988. Unpublished report (as cited in USEPA, 2006c).

Wallington, T.J., M.D. Hurley, J. Xia, D.J. Wuebbles, S. Sillman, A. Ito, J.E. Penner, et al. 2006. Formation of C7F15COOH (PFOA) and Other Perfluorocarboxylic Acids during the Atmospheric Oxidation of 8:2 Fluorotelomer Alcohol. *Environmental Science & Technology* 40(3): 924–30. *https://doi.org/10.1021/es051858x.*

Wester, P.W. and R. Kroes, 1988. Forestomach carcinogens: pathology and relevance to man. *Toxicologic Pathology* 16(2): 165–71 (as cited in ATSDR, 1992a).

World Health Organization (WHO). 2003. Metolachlor in Drinking-Water. Background document for development of WHO Guidelines for Drinking-Water Quality. Originally published in Guidelines for Drinking-Water Quality, 2nd ed., Vol. 2., Health Criteria and Other Supporting Information (World Health Organization, Geneva, 1996). WHO/SDE/WSH/03.04/39. Copyright WHO 2003. Available on the internet at: *https://www.who.int/water_sanitation_health/dwq/chemicals/metolachlor.pdf.*

WHO. 2005. *1,4-Dioxane in Drinking-Water. Background Document for Development of WHO Guidelines for Drinking-water Quality.* WHO/SDE/WSH/05.08/120. Available on the internet at: *https://www.who.int/water_sanitation_health/dwq/chemicals/14dioxane0505.pdf.*

Water Quality Portal (WQP). 2018. Water Quality Portal Data Warehouse. Available on the internet at: *https://www.waterqualitydata.us/.* Data Warehouse consulted September 2018.

Yamazaki, K., H. Ohno, M. Asakura, H. Ohbayashi, H. Fujita, M. Ohnishisi, M.T. Katagiri, H. Senoh, K. Yamanouchi, E. Nakayama, S. Yamamoto, T. Noguchi, K. Nagano, M. Enomoto, and H. Sakabe. 1994. Two-year toxicological and carcinogenesis studies of 1,4-dioxane in F344 rats and BDF1 mice. Drinking studies. In: Proceedings on the Second Asia-Pacific Symposium on Environmental and Occupational Health, Environmental and Occupational Chemical Hazards (Kobe University, Kobe), vol. 2, pp. 193–198.

Yamazaki, K. 2006. Personal communication with Julie Stickney, dated December 18, 2006.

Young, C.J., V.I. Furdui, J. Franklin, R.M. Koerner, D.C.G. Muir, and S.A. Mabury. 2007. Perfluorinated Acids in Arctic Snow: New Evidence for Atmospheric Formation. *Environmental Science & Technology* 41(10): 3455–61. *https://doi.org/10.1021/es0626234.*

Zogorski, J.S., J.M. Carter, T. Ivahnenko, W.W. Lapham, M.J. Moran, B.L. Rowe, P.J. Squillace, and P.L. Toccalino. 2006. *Volatile Organic Compounds in the Nation's Ground Water and Drinking-Water Supply Wells.* USGS Circular 1292. Available on the internet at: *http://pubs.usgs.gov/circ/circ1292/pdf/circular1292.pdf.*

Dated: February 20, 2020.

Andrew R. Wheeler,

Administrator.

[FR Doc. 2020–04145 Filed 3–9–20; 8:45 am]

BILLING CODE 6560–50–P

Reader Aids

Federal Register

Vol. 85, No. 47

Tuesday, March 10, 2020

CUSTOMER SERVICE AND INFORMATION

Federal Register/Code of Federal Regulations	
General Information, indexes and other finding aids	**202–741–6000**
Laws	**741–6000**
Presidential Documents	
Executive orders and proclamations	**741–6000**
The United States Government Manual	**741–6000**
Other Services	
Electronic and on-line services (voice)	**741–6020**
Privacy Act Compilation	**741–6050**

ELECTRONIC RESEARCH

World Wide Web

Full text of the daily Federal Register, CFR and other publications is located at: **www.govinfo.gov.**

Federal Register information and research tools, including Public Inspection List and electronic text are located at: **www.federalregister.gov.**

E-mail

FEDREGTOC (Daily Federal Register Table of Contents Electronic Mailing List) is an open e-mail service that provides subscribers with a digital form of the Federal Register Table of Contents. The digital form of the Federal Register Table of Contents includes HTML and PDF links to the full text of each document.

To join or leave, go to **https://public.govdelivery.com/accounts/USGPOOFR/subscriber/new**, enter your email address, then follow the instructions to join, leave, or manage your subscription.

PENS (Public Law Electronic Notification Service) is an e-mail service that notifies subscribers of recently enacted laws.

To subscribe, go to **http://listserv.gsa.gov/archives/publaws-l.html and select** *Join or leave the list (or change settings);* then follow the instructions.

FEDREGTOC and **PENS** are mailing lists only. We cannot respond to specific inquiries.

Reference questions. Send questions and comments about the Federal Register system to: **fedreg.info@nara.gov**

The Federal Register staff cannot interpret specific documents or regulations.

FEDERAL REGISTER PAGES AND DATE, MARCH

12207–12430 2
12431–12714 3
12715–12858 4
12859–12982 5
12983–13474 6
13475–13718 9
13719–14142 10

CFR PARTS AFFECTED DURING MARCH

At the end of each month the Office of the Federal Register publishes separately a List of CFR Sections Affected (LSA), which lists parts and sections affected by documents published since the revision date of each title.

3 CFR

Proclamations:
9988 12715
9989 12717
9990 12719
9991 12721
9992 12855

Executive Orders:
13907 12977
13908 12983

Administrative Orders:
Memorandums:
Memorandum of March 3, 2020 13469
Memorandum of February 21, 2020 13717
Notices:
Notice of March 4, 2020 12981
Notice of March 5, 2020 13473
Order of March 6, 2020 13719

5 CFR

1201 12723
1630 12431
1632 12431
1650 12431
8301 12859

6 CFR

Proposed Rules:
5 13831

7 CFR

357 12207
920 12860
944 12985
980 12985
999 12985
1437 12213

Proposed Rules:
51 13833
319 12441
932 12757

10 CFR

72 12861

Proposed Rules:
50 12442
Ch. I 13076

12 CFR

201 13723
204 13724
225 12398
238 12398
360 12724

Proposed Rules:
701 13982
702 13982
709 13982
741 13982
1006 12672

13 CFR

107 13725
120 13725
123 12862
142 13725
146 13725

Proposed Rules:
109 12875

14 CFR

25 12864
39 .....13475, 13477, 13727
71 .....12432, 12434, 12435, 12437, 12865, 12997, 12998, 12999, 13001, 13479, 13481, 13731, 13732
95 13003
97 .....12865, 12867

Proposed Rules:
25 .....12227, 12230
39 .....13578, 13581, 13583
71 .....12449, 13079, 13080

15 CFR

740 13009

16 CFR

Proposed Rules:
314 13082

17 CFR

200 12221
275 13734

18 CFR

35 .....13009, 13012

19 CFR

Ch. I 12731

20 CFR

641 13024
655 13024
656 13024
658 13024
667 13024
683 13024
702 13024

Proposed Rules:
641 13086
655 13086
656 13086
658 13086
667 13086
683 13086
702 13086

21 CFR

882 13312

895 13312
1308 13741
Proposed Rules:
1100 13840
1107 13840
1114 13840

22 CFR

171 13482
Proposed Rules:
171 13104

24 CFR

28 13041
30 13041
87 13041
180 13041
3282 13041

26 CFR

1 ..... 13045, 13483
Proposed Rules:
1 13118

28 CFR

28 13483

29 CFR

2 13024
7 13024
8 13024
10 13024
13 13024
18 13024
24 13024
29 13024
38 13024
96 13024
403 13414
417 13024
471 13024
501 13024
580 13024
1978 13024
1979 13024
1980 13024
1981 13024
1982 13024
1983 13024
1984 13024
1985 13024
1986 13024
1987 13024
1988 13024
Proposed Rules:
2 13086
7 13086
8 13086
10 13086
13 13086
18 13086
24 13086
29 13086
38 13086
96 13086
417 13086
471 13086
501 13086
580 13086
1978 13086
1979 13086
1980 13086
1981 13086
1982 13086
1983 13086
1984 13086
1985 13086
1986 13086
1987 13086
1988 13086

30 CFR

250 12733
913 12735
948 12739

31 CFR

595 13746
Proposed Rules:
800 13586
802 13586

32 CFR

233 13045
269 13047

33 CFR

100 13747
105 13493
117 13517
165 ..... 12439, 13049, 13520
Proposed Rules:
100 ..... 13595, 13598
127 12451
165 ..... 12452, 13598, 13841

34 CFR

300 13523
361 13523
363 13523
367 13523
370 13523
381 13523

37 CFR

1 12222
380 12745
Proposed Rules:
201 12704
202 12704

38 CFR

17 13052
Proposed Rules:
71 13356

39 CFR

501 12870
3025 13054
Proposed Rules:
3050 13601

40 CFR

31 12224
52 ..... 12874, 13055, 13057, 13748, 13755
63 13524
180 ..... 13059, 13546, 13548
710 13062
725 13760
Proposed Rules:
52 ..... 12232, 12241, 12876, 12877, 12882, 13602
141 14098
171 12244
180 12454
257 12456
721 12479

41 CFR

50-203 13024
60-30 13024
Proposed Rules:
50-203 13086
60-30 13086
102-81 12489

47 CFR

0 12747
1 12747
20 12747
36 12747
51 12747
54 ..... 12747, 13773
61 12747
64 12747
69 12747
76 13069
Proposed Rules:
2 13119
9 13843
20 13119
68 13119

49 CFR

Ch. XII 12731
270 12826
271 12826
1039 12749
Proposed Rules:
299 14036

50 CFR

622 13070
648 ..... 13071, 13074, 13552
679 ..... 13553, 13576, 13577, 13802
Proposed Rules:
17 13844
648 13603
679 13618

LIST OF PUBLIC LAWS

This is a continuing list of public bills from the current session of Congress which have become Federal laws. This list is also available online at *https://www.archives.gov/federal-register/laws*.

The text of laws is not published in the **Federal Register** but may be ordered in ''slip law'' (individual pamphlet) form from the Superintendent of Documents, U.S. Government Publishing Office, Washington, DC 20402 (phone, 202–512–1808). The text will also be made available at *https://www.govinfo.gov*. Some laws may not yet be available.

H.R. 6074/P.L. 116–123
Coronavirus Preparedness and Response Supplemental Appropriations Act, 2020 (Mar. 6, 2020; 134 Stat. 146)

Last List March 5, 2020

Public Laws Electronic Notification Service (PENS)

PENS is a free email notification service of newly enacted public laws. To subscribe, go to *https://listserv.gsa.gov/cgi-bin/wa.exe?SUBED1=PUBLAWS-L&A=1*

Note: This service is strictly for email notification of new laws. The text of laws is not available through this service. **PENS** cannot respond to specific inquiries sent to this address.